AGENDA
HIDALGO COUNTY
COMMISSIONERS COURT
MEETING
May 30, 2017
9:30 A.M.

NOTICE is hereby given in accordance with Chapter 551, Texas Government Code, that a SPECIAL MEETING of the Commissioners Court will be held in the Commissioners Courtroom of the Administration Building, 100 E. Cano, 1st floor, Edinburg, Hidalgo County, Texas. Discussion and possible action relating to the following business will be transacted:

1. **Roll Call**

2. **Pledge of Allegiance**

3. **Prayer**

4. **Approval of Consent Agenda**

5. **County Judge's Office:**

A. **AI-59605** Resolution in Recognition of the Hidalgo County Crime Stoppers as the organization celebrates its 20th Anniversary.

B. **AI-59639** Discussion, consideration, and action on Order reinstating Precinct 5 Constable and Justice of the Peace Pct. 5, Place 1.

C. **AI-60046** Discussion and action to approve revised templates for PACE Lender Agreement, PACE Owner Contract, and Notice of Contractual Assessment Lien related to the Form documents attached to the Resolution Establishing Hidalgo County PACE Program previously approved on November 15, 2016.

D. **AI-60044** Discussion and action on the Amendment to Tax Abatement Agreement effective as of December 13, 2016 between Hidalgo County and Wonderful Citrus Packing LLC and approve order on same.

6. **District Clerk - Laura Hinojosa:**

A. **AI-59992** Resolution in Honor of Ernesto Cano for 32 years of dedicated and exceptional service to the judicial system and Hidalgo County District Clerk's Office.

7. **District Attorney's Office:**

A. **AI-59929** Victim Assistance Program (VAP) Grant (1281):
Approval to submit a VAP Grant #2924301 budget adjustment to the Office of the Governor (OOG).

B. **AI-59793** DA Vehicle Theft (1221):
Approval of 2017 appropriation of funds in the amount of $31.92.

8. **Constables:**

A. **AI-60008** Constable Pct. 3 (1230)
Approval of 2017 appropriation of Chapter 59 funds received by Hidalgo County District Attorney's Office HIDTA Task Force in the amount of $23,255.00.

B. **AI-60018** Constable Pct. 3 (1257)

Approval of 2017 appropriation of US Treasury funds received by Hidalgo County District Attoney's Office HIDTA Task Force in the the amount of $10,000.00

C. **AI-59924** Constable Pct. #3:
Discussion, consideration and action on Interlocal Cooperation Agreement between County of Hidalgo, Texas and Hidalgo County Irrigation District #6

D. **AI-59795** Constable Pct. 3 - STOP Truancy (1285):
Approval to renew Interlocal Agreements between Hidalgo County and the following school districts - (STOP Truancy Program) for the 2017-2018 school year:
1. La Joya Independent School District
2. Mission Consolidated Independent School District

E. **AI-59905** Constable Precinct 4:
Discussion, consideration, and approval to appoint Jose Noe Rodriguez as a Reserve Deputy Constable by Constable A. "J.R." Gaitan, Constable Precinct 4 in accordance with Texas Local Government Code Section 86.012.

9. **Sheriff's Office:**

A. **AI-59922** Sheriff's Office OCDETF (1284):
1. Approval of FY2017 Overtime Agreement (Investigation Number SW-TXS-1059) between the Organized Crime Drug Enforcement Task Forces (OCDETF) and the Hidalgo County Sheriff's Office in the amount of $8,000.00.
2. Authorization to pay overtime reimbursable under the grant terms and conditions.
3. Approval of certification of revenues as certified by the County Auditor for the OCDETF agreement.
4. Approval of appropriation of funds in the amount of $8,000.00.

B. **AI-59925** Sheriff's Office OCDETF (1284):
1. Approval of Organized Crime Drug Enforcement Task Forces (OCDETF) Agreement between the Hidalgo County Sheriff's Office and the Drug Enforcement Administration McAllen District Office/Houston Division Office OCDETF Strike Force Group D-81.
2. Approval of certification of revenues as certified by the County Auditor for the OCDETF grant agreement.
3 . Approval to appropriate OCDETF grant award in the amount of $5,100.00 (in reference to Investigation Number SW-TXS-1059).

C. **AI-59917** Jail Commissary:
1. Approval of certification of revenues by the County Auditor in the amount of $5,392.20.
2. Approval of 2017 appropriation of funds in the Jail Commissary account for the amount of $5,392.20.

10. **Health & Human Services Department:**

A. **AI-59939** Resolution in Recognition of the Hidalgo County Tobacco Prevention and Control Coalition.

B. **AI-59799** Presentation of Walk Across Texas Champions challenge #13.

C. **AI-59998** HSGP (1293):
Requesting approval to submit extension request for grant contract #3114901 from the Office of the Governor to end on 08/31/2017. The purpose of the extension is to reallocate available funds and allow additional time for procurement.

D. **AI-60020** Requesting approval of the Interlocal Cooperation Agreement Between The University of Texas Rio Grande Valley and The County of Hidalgo. The purpose of the Agreement is surveillance and screening of mosquito-borne diseases in the Lower Rio Grande Valley.

E. **AI-60000** Requesting approval to allow Hidalgo County Health & Human Services staff in partnership with Hidalgo County Emergency Management staff to host and provide training for local Amateur Radio Operators at the Health Department conference room. The Field Day Exercise will be held on June 24, 2017.

F. **AI-60007** Discussion, consideration and update on ZIKA activities in Hidalgo County and encouragement on having licensed vector control staff in each precinct.

G. **AI-59948** Discussion, consideration and approval to disseminate the 2017 Operation Lone Star VIP Day invitation on behalf of Hidalgo County Commissioner's Court and Pharr-San Juan-Alamo Independent School District.

H. **AI-59916** 1. Requesting approval to ratify action taken on 05/02/17 through AI-59536 to designate Eduardo Olivarez, Chief Administrative Officer as contact person / managing employee for the purpose of processing the Medicare revalidation.
2. Requesting approval to ratify action taken on 05/02/17 through AI-59536 to request authority for County Treasurer to process electronic payment in the amount of $560.00 to pay for the Provider Enrollment Medicare Application Fee after review and auditing

procedures are completed by County Auditor.

I. **AI-59919** Requesting consideration of ratification to appoint Michael Anthony Gomez as a Public Health Intern in conjunction with the approved Master Internship Agreement between Texas A & M University and Hidalgo County, to become effective May 16, 2017 for a term ending August 12, 2017.

J. **Health Care Funding District:**

1. Discussion and/or action, including but not limited to Health Care Funding District and/or Expenditures

2. **AI-60014** Discussion and update regarding letter in support of the UHRIP Pilot Program.

K. **Indigent Health Care Program:**

1. Discussion and/or action, including but not limited to Indigent Health Care Program and 1115 Waiver and/or Expenditures

11. **Executive Office:**

A. Presentation for discussion, consideration and action (if necessary) including, but not limited to the following:
1) Update on ongoing county owned building construction, relocation and/or renovation repair projects
2) Emergency situations occurring since last agenda meeting

B. **AI-60006** Discussion, consideration, and approval for Environmental Compliance Coordinator to submit letter to TCEQ withdrawing application for permit for waste water treatment plant at Delta Lake Park in Pct. 1.

C. **AI-59962** Approval to accept settlement check from Fred Loya Insurance Agency in the amount of $2,409.26 to settle property damage claim with County security fence. (Courthouse)

D. **AI-59963** Approval to accept settlement check from GEICO County Mutual Insurance Company in the amount of $426.01 to settle auto accident claim with County vehicle. (Constable P3)

12. **Human Resources:**

A. **AI-60028** WIC - Food Summer Program (1292):
1. Discussion, consideration, and approval to create the following part-time temporary positions not to exceed 9 weeks, effective June 19, 2017:

Action	Dept./ Program	Position Title	Slot #	Budgeted Salary/ Hourly Rate
Create	350-020	Referral Resource Specialist I	T009	$3,240.00/yr. - $12.00/hr.

Create	350-020	Referral Resource Specialist I	T010	$3,240.00/yr - $12.00/hr.

2. Approval of intradepartmental transfer.

B. **AI-60019** Sheriff's Office (1100):
1. Requesting waiver of the Budget Amendment Policy - Personnel - Related Amendments.
2. Approval of the following personnel action in accordance with Section 9.14 of the Civil Service Commission Rules, effective 5/22/17:

Action	Employee No.	Slot No.	Dept./ Program	Current Position Title	Current Budgeted Salary	Proposed Position Title	Proposed Budgeted Salary
Reclassification	143502	0114	280-001	Senior Deputy Sheriff Step II	$51,068.00	Sergeant Step II	$61,290.00

C. **AI-59739** Sheriff's Office (1100):
1. Requesting waiver of the Budget Amendment Policy - Personnel - Related Amendments.
2. Discussion, consideration, and approval of the following personnel actions effective next full pay period 6/12/2017:

Action	**Slot#**	**Dept. / Program**	**Current/Proposed Position Title**	**Proposed Budgeted Allowance**
Clothing allowance (add)	0154	280-001	Deputy Sheriff Step I	$500.00
Clothing allowance (add)	0178	280-001	Deputy Sheriff Step I	$500.00
Clothing allowance (add)	0218	280-001	Deputy Sheriff Step I	$500.00

D. **AI-60004** Precinct #3 - Road Maintenance (1200):
1. Approval to create one (1) full time temporary position not to exceed six (6) months, effective June 26, 2017 through December 24,2017, as follows:

Slot No.	Dept./Program	Position Title	Proposed Budgeted Salary
T108	123-005	Administrative Assistant IV	$19,685.00/yr.

2. Approval of intradepartmental transfer.

13. **Urban County:**

A. **AI-60026** Approval of a Proclamation declaring June 2017 Home Ownership Month within the County of Hidalgo

B. **AI-59934** Requesting approval of a program amendment for the City of La Villa FY's 26 & 29 (2013 & 2016) work plans. Fiscal year 2013: will modify the current scope of work of a 100,000 gallon elevated water storage tank to a 200,000 gallon. Fiscal year 2016: will delete the current scope of work and add the construction of a 200,000 gallon elevated water storage tank.

14. **Fire Marshal's Office:**

A. **AI-59911** Requesting approval to process the following invoice as a claim with authority for County Treasurer to issue payment after review, audit, and processing procedures are completed by County Auditor.

VENDOR	INVOICE #	INVOICE DATE	AMOUNT
THE PRODUCTIVITY CENTER, INC.	HCFM0081515	01/05/2015	$317.00
		Total	$317.00

15. **IT Department:**

A. **AI-59707** COMMISSIONER PCT. 1
Authorization and approval to purchase new wireless gps service through the County's membership/participation with CONTRACT: DIR-TSO-3415 with VERIZON WIRELESS for the following:

Qty:	Description:	User:	Service Plan:
30	Data Plan for GPS	Office Use	Machine to Machine Account Share 5MB @ $7.00 each/per month
90	Data Plan for GPS	Office Use	Machine to Machine Account Share 1MB @ $5.00 each/per month

16. **Head Start Program:**

A. **AI-59888** Discussion/Approval of Program Calendars for Program Year 2017-2018

B. **AI-59889** Discussion/Approval to disburse lump sum summer paychecks to staff who resign as of the Last Summer Leave Day/Last Working Day for position assigned.

C. **AI-59890** Discussion/Approval of the Following 2017-2018 Hidalgo County Head Start Program Plans:

Child Nutrition Services	Health Services	Special Services	
Education Services	Human Resources	Transition Services	
Family Services	Mental Health Services	Transportation Services	

D. **AI-59891** Discussion/Approval of the Community Needs Assessment

E. **AI-59892** Discussion/Approval to Enter into a Memorandum of Understanding (MOU) between Hidalgo Independent School District and Hidalgo County Head Start Program

F. **AI-59893** Discussion/Approval of Request to Enter into a Memorandum of Understanding (MOU) between Tropical Texas Behavior Health and Hidalgo County Head Start Program.

G. **AI-59894** Discussion/Approval to award classroom space (as attached hereto) for sealed bids on Lease of Classroom Space for the following area:
a. Classroom Space - Mercedes RFB# 2017-001-03-31

H. **AI-59896** Discussion/Approval to Declare Obsolete the Attached List of Items and Transfer Items to County's Surplus Department for Proper Disposition

I. **AI-59897** Recognition of Accident Free Centers

J. **AI-59887** Discussion/Approval of Summer Work Schedule

17. **WIC:**

A. **AI-59968** WIC Program (1292):
Requesting approval to submit credit application to create sub account for WIC Department with Boggus Ford Lincoln in order to fix our 2009 Ford E-350 Diesel Cargo Van and authorize Valde Guerra, County Executive Officer to sign credit application.

18. Precinct #2 - Comm. Cantu:

A. **AI-60038** 1. Requesting approval of an Interlocal Cooperation Agreement (ICA) between the County of Hidalgo, and the City of Pharr concerning the use of the Pct 2 Las Milpas Park Pool by the City of Pharr to provide swimming lessons to citizens.
2. In accordance with Section 791.014 of the Texas Government Code, requesting approval of the Interlocal Cooperation Agreement (ICA) project regarding the use of the Pct 2 Las Milpas Park by the City of Pharr to provide swimming lessons to citizens.

19. **Precinct #3 - Comm. Flores:**

A. **AI-60036** PCT 3 - Veterans Blvd SH495 (1200):
1. Approval of certification of revenues as certified by County Auditor for revenues received from the City of Palmview for the road improvement to Veterans Blvd. (SH 495).

2. Approval of 2017 appropriation of funds into Pct 3 Veterans Blvd. (SH 495) in the amount of $660.900.00.

20. **Precinct #4 - Comm. Palacios:**

A. **AI-59923** 1. Discussion consideration and approval for Hidalgo County Pct. 4 to appoint Carlos Cruz Leal student at the University of Texas Rio Grande Valley and Daniel Diaz student at the University of Texas at Austin, as interns under Hidalgo County Precinct 4 for the period of June 5, 2017 to August 11, 2017.

2. Authorization for Hidalgo County Judge to sign Affiliation/Training Letter for internship.

B. **AI-59972** Requesting approval of claim for the following, with authority for County Treasurer to issue payment after review and auditing procedures are completed by County Auditor.

Invoice Date	Invoice No.	Description	Amount
05/22/17	879363	Subscription from 03/12 through 05/10	$32.93

21. **Budget & Management:**

A. **AI-60042** 1. Presentation and discussion on Hidalgo County Capital Improvement Plan
2. Presentation, discussion and possible action on CIP Plan of Finance.

B. **AI-59918** Requesting approval for payment of Invoice No.: Mission PL FY2017-2b to the City of Mission/Speer Memorial Library for the Hidalgo County Library System (eLibrary) payment in the amount of $400,000.00.

C. **AI-59803** Texas VINE Grant (1283):
Approval to submit the FY 2017 Texas VINE Grant reimbursement maintenance invoice in the amount of $6,928.83 (3rd Qtr.) and the Texas Statewide Automated Victim Notification Service (SAVNS) County Verification of Continuing Production Record with the authority for County Judge to sign the required documents.

D. **Budget Appropriations:**

1. **AI-59940** 2016 General Fund & Special Revenue Fund-Capital Leases:
1. Approval of certification of revenues, as certified by the County Auditor, to fund capital lease expenditures for various departments.
2. Approval of 2016 appropriation of revenues & expenditures to fund capital lease expenditures for various departments.
3. Approval of various 2016 intradepartmental transfers to fund capital lease expenditures for various departments.

2. **AI-59912** Pct. 1 Rd. Maintenance (1200):
Approval of 2017 appropriation of funds into Pct. 1 Rd. Maintenance (121-005) in the amount of $122,350.92.

22. **Purchasing Department - Notes:**

A. FOR ANY CONTRACT(S) AWARDED AND APPROVED UNDER THIS AGENDA, EXECUTED COPIES OF THE CONTRACT(S) WILL BE AVAILABLE ON THE COUNTY INTRA-NET WEBSITE AND WILL BE FORWARDED VIA E-MAIL, FAX OR HAND DELIVERED TO HIDALGO COUNTY AUDITOR'S OFFICE.
B. ANY AND ALL REQUESTS FOR PAYMENT(S) APPROVED WILL BE SUBJECT TO COUNTY AUDITORS PROCESSING PROCEDURES INCLUDING AUTHORITY FOR COUNTY TREASURER TO ISSUE PAYMENT(S)/CHECK(S).

A. **AI-59988** Approve an "Order" establishing the "Public Purpose" for the purchase of promotional items for disseminating information to vendors and residents of the functions, duties, responsibilities, policies and procedures of the Hidalgo County Purchasing Department at upcoming events commencing with UTRGV's Procurement Technical Assistance Center Annual South Texas Business Opportunity Forum [scheduled for June 27, 2017] thus promoting and encouraging more interest and vendor participation in the County's procurement projects.

B. **Hidalgo County**

1. **AI-59848** Presentation of bids received [as detailed in tabulation sheet contained herein] for the purpose of award & approval of contract document, to the vendor submitting the lowest & best bid for "Limestone" [meeting all specifications/requirements] and subject to compliance with HB1295 (if & when applicable).

2. **AI-59913** Acceptance and approval to exercise the County's option to extend the final one (1) year renewal allowed under contract #E-16-125-03-22 under the same rates, terms and conditions with Gulf Data Products for the provision of "General Printing Services and Related Supplies" effective June 15, 2017 to June 14, 2018.

3. **AI-59711** Presentation of bids received for the purpose of award to the responsible vendor submitting the lowest & best bid [meeting all specifications and/or requirements] and approval of contract document for project titled: "Rental of Industrial Uniforms-Hidalgo County" through RFB No.: 2017-045-03-29-SMA

4. **AI-59777** Recommendation for CC to reject the sole bid received for RFB No.: 2017-012A-04-26-SGS titled: Hidalgo County-"Disposal of Used Oil-Oil Filters & Antifreeze" and to re-advertise this project, with modifications to Specifications, in hopes of obtaining more participation and better pricing.

C. **Pct. 1**

1. **AI-59985** PCT. 1
1. Requesting acceptance and approval of Certificate of Construction Completion as submitted by Texas Cordia Construction for Paving & Drainage Improvements for Mile 11 North (FM 1015 - Mile 1 West).
2. Requesting acceptance and approval of Application for Payment No. 7 (Retainage Release) in the amount of $31,666.57 as submitted by Texas Cordia Construction contracted vendor for the provision of Paving & Drainage Improvements for Mile 11 North (FM 1015-Mile 1 West) under Contract C-16-279-09-06.

2. **AI-60025** PCT.1
A. Requesting acceptance and approval of Certificate of Substantial Completion as submitted by Asago Construction for the FEMA Road & Drainage Improvements Project - Mile 4 North Road.
B. Acceptance and approval of Application for Payment #2 Final in the amount of $87,674.35 as submitted by Asago Construction for the provision of FEMA Road & Drainage Improvements for Mile 4 North Road under Contract# C-16-364-11-01

3. AI-60029 PCT.1
A. Acceptance & Approval of Certificate of Construction Completion as submitted by Asago Construction for the FEMA Road & Drainage Improvements - Mile 4 North Road.
B. Acceptance & Approval of Application for Payment #3 Retainage in the amount of $14,304.53 as submitted by Asago Construction for the provision of FEMA Road & Drainage Improvements - Mile 4 North Road under Contract# C-16-364-11-01.

4. AI-60052 A.) Requesting approval of final negotiated Agreement for Professional Engineering Services with L & G Consulting Engineers Inc., as it relates to Mile 6 Project (Contract # C-17-157-05-30) as approved for negotiations by Hidalgo County Commissioners Court on 03/07/2017;
B.) Requesting approval of Work Authorization No. 1 in the amount of $1,614,606.00, with L & G Engineering Services for Mile 6 Project.

5. AI-59987 Pct. #1:
Requesting acceptance and approval of the following for 2GS, LLC dba Earthworks Enterprise for FEMA Road & Drainage Improvements: Mile 11 North, Mile 13 ½ & Yvette Circle under Contract C-16-398-12-13 including, but not limited to:
A. Certificate of Construction Completion as submitted and recommended by project engineer, LeFevre Engineering & Management Consulting, LLC reflecting the date of May 8, 2017;
B. Application for Payment No. 3 (Retainage Release) in the amount of $25,983.11.

6. AI-60041 **PCT 1**
A. Requesting approval of Interlocal Cooperation Agreement between The City of Weslaco, Texas and Hidalgo County, Texas concerning Phase I and Phase II Improvements to Mile 6 West Road from Mile 9 North to Mile 11 North **[Phase I** project development activities to the Road consists of the Environmental Assessment, Public Involvement and Schematic Services and **Phase II** shall include Field Surveys, Right-of-Way Map, Plans, Specification & Estimates, Roadway Right-of-Way Acquisition/ Compensable Utility Services];

B. In accordance with Texas Government Code §791.014, Hidalgo County, Texas, acting by and through the Hidalgo County Commissioners Court, has been advised of a proposed project of a desire to widen and reconstruct Mile 6 West between Mile 9 and Mile 11 through a Phase II Inter-local Cooperation Agreement to be entered into with the City of Weslaco, Texas, and Hidalgo County.

7. AI-59945 Pct. #1:
Acceptance and approval for items under Contract #C-16-363-11-01 between Hidalgo County [Pct. #1] ASAGO LLC, dba, ASAGO Construction for the FEMA Road & Drainage Improvements: Mile 2.5 East Road including but not limited to the following:
A. Certificate of Substantial Completion reflecting the date of May 11, 2017; and,
B. Payment Application No. 6 (Retainage) in the amount of $23,421.33.

D. Pct. 3

1. **AI-60010** A. Requesting approval of "Supplemental Agreement No. 1" as submitted by L&G Engineering Contract C-15-161-11-17 to extend the project limits as requested by the Texas Department of Transportation, to include the section from IH2 (US83) on Abram Road North to Veterans Blvd. (approximately 0.2 Miles), thence East to SH 364 (La Homa);
B. Acceptance and approval of Work Authorization No. 2 (with an estimated cost of $1,321,800.00) as submitted by project engineer, L&G Consulting Engineers, Inc. dba L&G Engineering for, "PS&E, Surveys, Right-of-Way Map and Permitted Utilities Coordination for the Veterans Boulevard (SH 495) project from IH2 (US83) to La Homa Road (SH 364)" located in Precinct 3 through Contract # C-15-161-11-17;

   C. Pursuant to contract with L&G Engineering, (Article 14) to C-15-161-11-17, approval to permit the subcontracting of R.O.W. Surveying Services, LLC and Ergonomic Transportation Systems, Inc. for the Veterans Boulevard Project.

2. **AI-59931** Requesting approval of a professional appraisal services agreement with CruzBro RGV, LLC dba The Real Estate Center for the purposes of appraisal services for: The Fair Market Value Appraisals in connection with the Acquisition of Land-Sale and/or Exchange, Rights of Way, Easements, Condemnations and Disposition of County owned Property located within Hidalgo County Precinct No. 3 (on an as needed basis) and as selected for negotiations by CC from the "POOL" of Appraisers by CC on 2/21/17.

E. Pct. 4

1. **AI-59993** Acceptance and approval of Change Order No. 10 (decrease) for deduction of Landscaping Allowance to zero-out Contract No. C-14-067-06-03 with JCon Construction, LLC. as reviewed/approved by project architect of record, Mata-Garcia Architects, LLP for: Hidalgo County Precinct No. 4 Project: Construction of the Linn-San Manuel Emergency Services Facilities with authority for County Judge, or Court Member to execute document.

F. Health & Human Services Dept.

1. **AI-60003** Requesting authority to advertise and procurement packet [drafted/developed by HC-DH&HS & Purchasing Dept.] the project titled: "Online Pharmacy Billing Services" - RFP No.: 2017-149-06-21-HGO for County Indigent Health Care Level 2 Pilot Program with draft contract document subject to final legal review/approval.

G. Co. Wide

1. **AI-59743** Presentation of Bids received (as detailed in tabulation sheet contained herein) for the purpose of award to the responsible multiple vendors submitting the lowest and best bids (including meeting specifications and/or requirements) with approval of contract document for project titled: Hidalgo County "Pipes & Related Miscellaneous Items" through RFB No.: 2017-046-04-05-FAZ as follow:
   A. Rio Valley Pipe, LLC d/b/a CAPA;
   B. HD Supply Waterworks, LTD
   C. Act Pipe & Supply, Inc.
   D. Ferguson Enterprises d/b/a Ferguson Waterworks
   E. Aguaworks Pipe & Supply, LLC

23. **Open Forum**

24. **Closed Session:**
Commissioners' Court may go into Closed Session pursuant to Chapter 551, Texas Government Code, Sections 551.071 & 551.072 to discuss the following:

A. Real Estate Acquisition

B. Pending and/or potential litigation

C. **AI-59997** Pending/potential litigation - Edinburg Municipal Airport & City of Edinburg Property

D. **AI-59927** EEOC Charge No. 451-2017-00801; Agnete Antons v. County of Hidalgo

E. **AI-59932** Claim of Estate of Gabriel Miranda, Jr., deceased

F. **AI-59954** Claim of AT&T

G. **AI-59956** Claim of Texas Department of Public Safety

H. **AI-59958** Claim of Juan Carlos Garcia

I. **AI-59960** Claim of Severino Roque

J. **AI-59994** Claim of AT&T

25. A. Requesting exemption from competitive bidding requirements under the Texas Local Government Code, Section 262.024(A) (4) "a Professional Service" for the "provision of legal services/representation in connection with litigation."

B. Requesting engagement with the firm of _____ for the "Provision of Legal Services/Representation in connection with Litigation" and authority to submit letter of engagement (subject to compliance with HB1295)

26. **Open Session:**

A. Real Estate Acquisition and appropriation for same

B. Pending and/or potential litigation

C. **AI-59999** Pending/potential litigation - Edinburg Municipal Airport & City of Edinburg Property

D. **AI-59928** EEOC Charge No. 451-2017-00801; Agnete Antons v. County of Hidalgo

E. **AI-59933** Claim of Estate of Gabriel Miranda, Jr., deceased

F. **AI-59955** Claim of AT&T

G. **AI-59957** Claim of Texas Department of Public Safety

H. **AI-59959** Claim of Juan Carlos Garcia

I. **AI-59961** Claim of Severino Roque

J. **AI-59995** Claim of AT&T

27. **Closed Session:**
Commissioners Court may reconvene into Closed Session for the discussion regarding the agenda items listed

28. **Open Session:**
Commissioners Court may reconvene into Open Session for the discussion regarding the agenda items listed

29. **Adjourn**

AI-59605 **County Judge's Office** **5. A.**

CC - REGULAR

Meeting Date: 05/30/2017

Submitted For: Julia Sullivan, PUBLIC AFFAIRS

Submitted By: Julia Sullivan, PUBLIC AFFAIRS

Department: PUBLIC AFFAIRS

Information

CAPTION

Resolution in Recognition of the Hidalgo County Crime Stoppers as the organization celebrates its 20th Anniversary.

BACKGROUND

Fiscal Impact

CALENDAR YEAR: n/a **ACCT. #:** n/a

FUNDS AVAILABLE Y/N?: n/a **MATCHING FUNDS Y/N?:** n/a

BUDGETARY IMPACT:

no budgetary impact.

Attachments

Resolution

Form Review

Inbox	Reviewed By	Date
Budget & Management	Veronica Ortiz	04/27/2017 04:54 PM
Linda Flores	Linda Flores	04/28/2017 11:06 AM
Final Approval	Monica Salinas	05/26/2017 02:58 PM
Form Started By: Julia Sullivan		Started On: 04/27/2017 04:46 PM
Final Approval Date: 05/26/2017		

RESOLUTION IN RECOGNITION OF HIDALGO COUNTY CRIME STOPPERS 20TH ANNIVERSARY

WHEREAS, Hidalgo County Crime Stoppers was established in May 1997 by community residents who decided to unite and take a stand against the growing crime rate in the county; and

WHEREAS, the mission of Hidalgo County Crime Stoppers is to reduce and prevent crime as well as actively pursue those who commit crime, by working closely with the community and treating the public with respect and dignity, as well as maintaining the highest level of integrity and professionalism; and

WHEREAS, residents are able to submit information about criminal activity anonymously, which the Crime Stoppers program in turn transfers to law enforcement for immediate action, and in some cases if the information leads directly to an arrest, narcotics seizure and/or conviction tipsters may receive a cash reward; and

WHEREAS, since its inception, Hidalgo County Crime Stoppers has partnered with the Hidalgo County Sheriff's Office to fight crime and currently collaborates with a coordinator who acts as a liaison between both groups; and

WHEREAS, the non-profit organization consists of volunteers who operate the program through generous donations from the community; and

WHEREAS, Hidalgo County Crime Stoppers are the eyes and ears of law enforcement in Hidalgo County and the program prides itself on providing a safe forum for citizens to report crime in their neighborhoods without fear of retaliation.

NOW, THEREFORE, BE IT PROCLAIMED that the Hidalgo County Commissioners Court hereby recognizes the Hidalgo County Crime Stoppers program for 20 years of dutiful service, dedication and commitment to the safety and well-being of the citizens of Hidalgo County.

Approved this 30th day of May 2017.

RAMON GARCIA
County Judge

DAVID L. FUENTES
County Commissioner, Pct. 1

EDUARDO "EDDIE" CANTU
County Commissioner, Pct. 2

JOE M. FLORES
County Commissioner, Pct. 3

JOSEPH PALACIOS
County Commissioner, Pct. 4

Attest: ARTURO GUAJARDO, JR.
County Clerk

AI-59639 **County Judge's Office** **5. B.**

CC - REGULAR

Meeting Date: 05/30/2017

Submitted For: Yolanda Chapa, COUNTY JUDGE **Submitted By:** Sandra Deleon, COUNTY JUDGE

Department: COUNTY JUDGE

Information

CAPTION

Discussion, consideration, and action on Order reinstating Precinct 5 Constable and Justice of the Peace Pct. 5, Place 1.

BACKGROUND

Fiscal Impact

Attachments

map
Edcouch resolution
Elsa letter of support
ORDER

Form Review

Inbox	Reviewed By	Date
Budget & Management	Veronica Ortiz	05/26/2017 01:23 PM
Final Approval	Monica Salinas	05/26/2017 02:58 PM
Form Started By: Sandra Deleon		Started On: 04/28/2017 01:49 PM
Final Approval Date: 05/26/2017		

Hidalgo County
Elections Department
Commissioner-JP
May 6, 2017

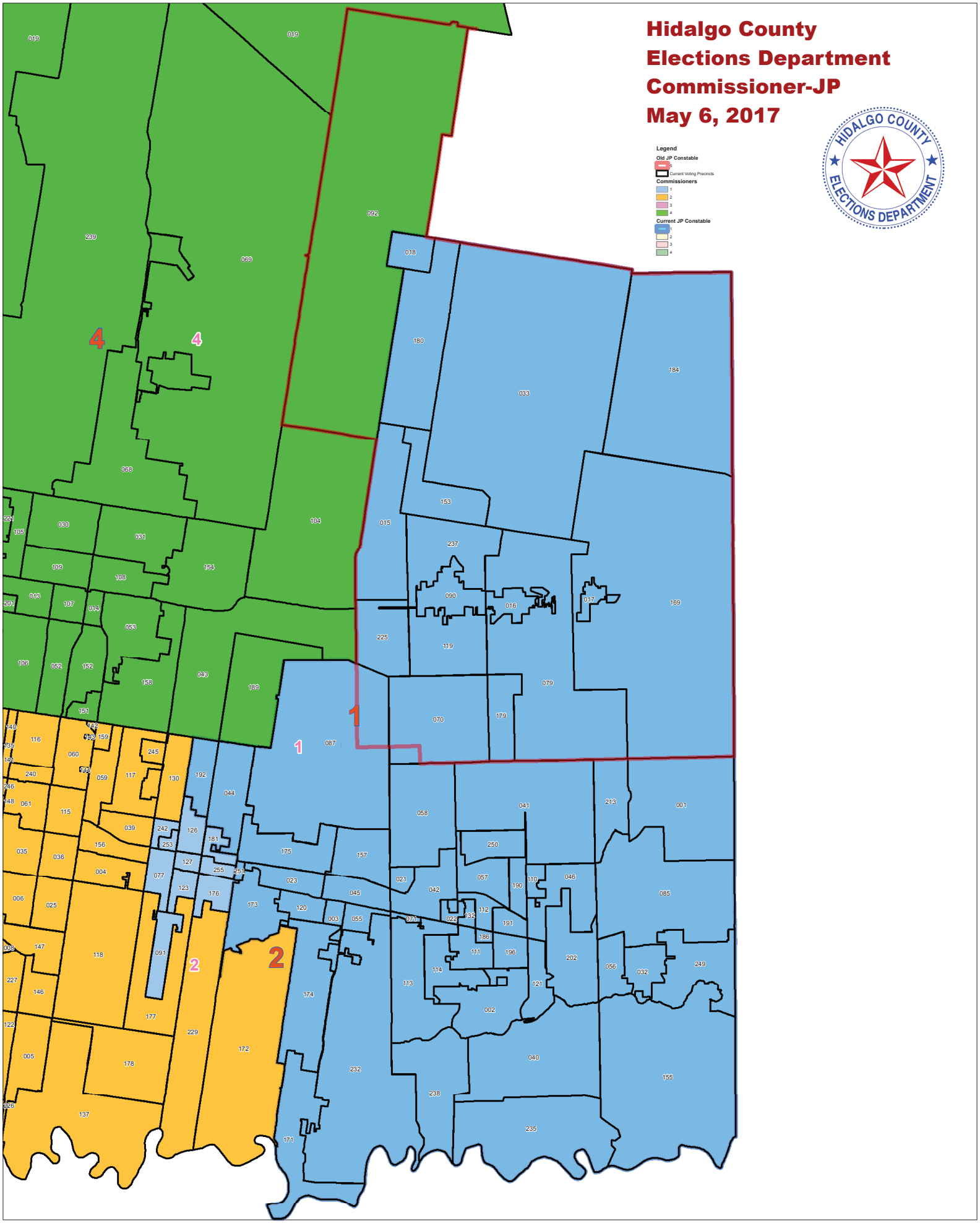

CITY OF EDCOUCH

RESOLUTION No. 2017-06

RESOLUTION IN SUPPORT OF REINSTATEMENT OF THE OFFICE OF JUSTICE OF THE PEACE AND CONSTABLE FOR PRECINCT 5 IN THE DELTA AREA

WHEREAS, the City of Edcouch is in full supports of the reinstatement of the office of the Justice of the Peace & Constable for Precinct 5 in the Delta Area; and

WHEREAS, the Justice of the Peace and Constable for Precinct 5 served the communities of Edcouch, Elsa, La Villa, Hargill, Monte Alto, together with Edcouch-Elsa ISD, Monte Alto ISD and La Villa ISD, as well as community organizations and surrounding areas in the Delta Area for over 44 years before it was abolished in 2014; and

WHEREAS, the abolishment of the office of Justice of the Peace and Constable in Precinct 5 has had a direct impact in our communities; and

WHEREAS, the increase in population has brought forth an increase in crime rates, truancy cases, criminal activities, traffic violations; and

WHEREAS, our residents no longer have the services, protection, and communication with the Justice of the Peace and Constables office as other precincts have; and

WHEREAS, the presence of the a Justice of the Pease and Constable Office will bring more justice and law enforcement in our area; and

WHEREAS, the City of Edcouch, as well as community organizations in the Delta Area are committed to collaborate and support the re-establishment of the office of Justice of the Peace and Constable in Precinct 5.

NOW, THEREFORE, BE IT RESOLVED that the Mayor and City Commission of the City of Edcouch offers its full support for the establishment of the office of Justice of the Peace and Constable for Precinct 5 to be re-established to serve our residents in the City of Edcouch and the surrounding communities of the Delta Area.

PASSED, APPROVED, AND ADOPTED BY THE CITY OF EDCOUCH ON THE 2ND DAY OF MAY, 2017

VIRGINIO GONZALEZ JR., MAYOR

MARICELA MORENO, MAYOR PRO TEM

RENE FLORES, ALDERMAN PL. 1

ESMERALDA CABRERA, ALDERWOMAN PL. 2

DANIEL GUZMAN, ALDERMAN PL. 4

ORLANDO J. VILLARREAL, ADERMAN PL. 5

ATTEST: PETE DE LA CRUZ
INTERIM CITY MANAGER

Alonzo "Al" Perez Jr., Mayor
Victor Hernandez, Mayor Pro-Tem
Daniel Marichalar, Commissioner Pl. 1
Ricardo Sanchez, Commissioner Pl.3
Robert Escobar, Commissioner Pl. 4
Juan Jose "JJ" Ybarra, City Manager

VIA: ELECTRONIC MAIL
Countyjudge@co.hidalgo.tx.us

Honorable Judge Ramon Garcia
Hidalgo County

Hon. Joe M. Flores, Pct. 3 Commissioner
Hidalgo County

Hon. David L. Fuentes, Pct. 1 Commissioner
Hidalgo County

Hon. Joseph Palacios, Pct. 4 Commissioner
Hidalgo County

Hon. Eduardo "Eddie" Cantu, Pct. 2 Commissioner
Hidalgo County

100 E. Cano St. 2nd Floor
Edinburg, Texas 78539

Re: Letter of Support for Precinct 5

Dear Judge & Commissioners:

The City of Elsa is in full support of the reestablishment of Precinct 5. Our community has had a direct impact on the abolishment of Precincts Justice of the Peace and Constable Office.

The past several years the City of Elsa has seen an increase in population, which brings forth an increase in Truancy cases, Landlord and Tenant disputes, and Small claim disputes. In addition, we see more criminal activity and traffic violations.

Our constituents often address the concerns that they no longer have the one on one communications with the Justice of the Peace Office, the proximity of driving one to five miles, and the turn-around of legal matters. They also mention that the lack of our own Constable Offices increases our City's crime rate.

Presently, our Police Department statistics indicate a 9 to 10% increase in crime rate per year.
We can attribute that to an overspill of crime from subdivisions outside our City limits that normally would be patrolled by our local Constables.

A current census of Commissioned Officers in Precinct 1, shows that we have a little over 200 Commissioned Officer unlike other Precincts, yet serving and protecting an estimated population of 175,000 an equal number of population of the other Precincts, used by the Previous District Attorney.

The presence of a Justice of the Peace Office and Constable Office brings more visibility of Justice and law enforcement, into the Delta Area. Therefore, we are asking for your favorable consideration on bringing back Precinct 5.

Judge and Commissioners, your favorable consideration will be appreciated by those we serve, and those we continue to protect, in Hidalgo County.

Respectfully,

Juan Jose "JJ" Ybarra,
City Manager

STATE OF TEXAS §

COUNTY OF HIDALGO §

ORDER TO REINSTATE PRECINCT 5

WHEREAS, Hidalgo County, Texas is a Texas County with a population greater than 150,000 and four (4) Commissioner Precincts, and four (4) Justice Precincts, with eight (8) Justices of the Peace and four (4) Constables as permitted by Article V. Section 18 of the Texas Constitution; and

WHERAS, the Hidalgo County Commissioners Court may, under Article V. Section 18 of the Texas Constitution, elect to increase the number of Justice Precincts "from time to time and for the convenience of the people"; and

WHEREAS, on November 15, 2011, an Order abolishing Precinct 5 was approved by the Hidalgo County Commissioners Court and the Precinct 5 offices closed their doors on December 31, 2012; and

WHEREAS, the cities of Edcouch, Elsa, La Villa, Monte Alto, and Hargill, along with surrounding communities in the Delta Area have expressed their support of the reinstating of Precinct 5 for the benefit of their communities; and

WHEREAS, the Hidalgo County Commissioners Court, after due consideration, believes that it is in the best interest of the citizens in the Delta area to increase the number of Justice Precincts by re-instating Hidalgo County Precinct 5, Justice of the Peace Precinct 5 Place 1 and Constable Precinct 5; and

NOW, THEREFORE, BE IT ORDERED BY THE COMMISSIONERS COURT of HIDALGO COUNTY that:

1. The recitals set forth in this Order are true and correct.
2. Precinct 5, which includes the positions of Justice of the Peace Place 1 and Constable, is hereby reinstated.
3. The Hidalgo County Elections Administrator shall note this change accordingly and assure that future ballots will reflect said change. The earliest date for the Primary Election will be March 6, 2018 and November 6, 2018 for the General Election. Winners will take office on January 1, 2019.
4. The residents of Precinct 5 will continue to be served by their respective Commissioner.

5. This Order reinstating the Hidalgo County Precinct 5, which includes Justice of the Peace Place 1 and Constable, is made for the convenience and benefit of the people of Hidalgo County, Texas after due and careful consideration of all factors relevant to the issues and after having timely posted public notice of such contemplated action in accordance with law and after hearing public comments thereon, in order to provide the most effective and convenient resources to the communities in Precinct 5.

Passed and Adopted, this 30th day of May, 2017.

It is so ordered.

RAMON GARCIA
County Judge

DAVID L. FUENTES
County Commissioner, Pct. 1

EDUARDO "EDDIE" CANTU
County Commissioner, Pct. 2

JOE M. FLORES
County Commissioner, Pct. 3

JOSEPH PALACIOS
County Commissioner, Pct. 4

Attest: ARTURO GUAJARDO, JR.
County Clerk

AI-60046 **County Judge's Office** **5. C.**

CC - REGULAR

Meeting Date: 05/30/2017

Submitted For: Michael Leo, COUNTY JUDGE **Submitted By:** Virginia Jones, COUNTY JUDGE

Department: COUNTY JUDGE

Information

CAPTION

Discussion and action to approve revised templates for PACE Lender Agreement, PACE Owner Contract, and Notice of Contractual Assessment Lien related to the Form documents attached to the Resolution Establishing Hidalgo County PACE Program previously approved on November 15, 2016.

BACKGROUND

Fiscal Impact

Attachments

NOTICE
contract
contract

Form Review

Inbox	Reviewed By	Date
Budget & Management	Veronica Ortiz	05/26/2017 11:44 AM
Linda Flores	Linda Flores	05/26/2017 02:47 PM
Final Approval	Monica Salinas	05/26/2017 02:58 PM
Form Started By: Virginia Jones		Started On: 05/26/2017 11:39 AM
Final Approval Date: 05/26/2017		

NOTICE OF CONTRACTUAL ASSESSMENT LIEN
PURSUANT TO
PROPERTY ASSESSED CLEAN ENERGY ACT

STATE OF TEXAS §
§
COUNTY OF HIDALGO §

RECITALS

A. The Property Assessed Clean Energy Act ("**PACE Act**"), Texas Local Government Code Chapter 399, authorizes the governing body of a local government to establish a program and designate a region within the local government's jurisdiction within which an authorized representative of the local government may enter into written contracts with the record owners of commercial, industrial, agricultural, and large multifamily residential (5 or more dwelling units) real property to impose assessments on the property to finance the cost of permanent improvements fixed to the property intended to decrease water or energy consumption or demand. Unless otherwise expressly provided herein, all terms used herein have the same meanings ascribed to them in the PACE Act.

B. Hidalgo County Texas ("**Local Government**") has established a program under the PACE Act pursuant to a resolution dated December 15, 2016, adopted by the commissioners court (the "**PACE Program**"), and has designated The Lower Rio Grande Valley Development Council ("**Authorized Representative**") as the representative authorized to enter into and enforce the Assessment, Owner Contract and Lender Contract described herein, and has designated the entire territory within Hidalgo County's jurisdiction as a region ("**Region**") within which the Authorized Representative and the record owners of such real property may enter into written contracts to impose assessments to repay the financing by owners of qualified improvements on the owner's property pursuant to the PACE Program.

C. _____ ("**Property Owner**") is the legal and record owner of the qualified "real property," as defined in Section 399.002 of the PACE Act, within the Region located at _____, _____, Texas, and more fully described in Exhibit A attached hereto and made a part hereof (the "**Property**").

D. Property Owner has applied to Local Government to participate in the PACE Program by installing or modifying on the Property certain permanent improvements described in Exhibit B attached hereto and made a part hereof, which are intended to decrease water or energy consumption or demand, and which are or will be fixed to the Property as "qualified improvements", as defined in Section 399.002 of the PACE Act (the "**Qualified Improvements**"). The installation or modification of such Qualified Improvements on the Property will be a "qualified project" as defined in Section 399.002 of the PACE Act. Property Owner has entered into a written contract (the "**Owner Contract**") with Local Government pursuant to the PACE Act and the PACE Program and has requested Local Government to impose an assessment on the Property to repay the financing of such Qualified Improvements.

E. The financing of such Qualified Improvements will be provided to Property Owner by _____ ("**Lender**"), a qualified lender selected by Property Owner, pursuant to a written contract executed by Lender and Local Government as required by Section 399.006(c) of the PACE Act and by the PACE Program (the "**Lender Contract**"). Lender will be responsible for all servicing duties other than those specifically undertaken by Local Government in the Lender Contract.

THEREFORE, Local Government hereby gives notice to the public pursuant to Section 399.013 of the PACE Act that it has imposed an assessment on the Property in the amount of $_____, as set forth on Exhibit C attached hereto, which together with all interest, fees, penalties, costs and other sums due under and/or authorized by the PACE Act, PACE Program and the financing documents between Property Owner and Lender (the "**Financing Documents**") is herein referred to as the "**Assessment**".

Pursuant to Section 399.014 of the PACE Act,

1. The Assessment, including interest and any penalties, costs, or fees accrued thereon,

   (i) is a first and prior lien on the Property from the date that this Notice of Contractual Assessment Lien is recorded in the Official Public Records of Hidalgo County, Texas, until such Assessment, interest, penalties, costs, and fees are paid in full; and

   (ii) such lien has the same priority status as a lien for any other ad valorem tax, pursuant to Section 399.014(a)(2) of the PACE Act.

2. The lien created by the Assessment runs with the land, and according to Section 399.014(b) of the PACE Act, any portion of the Assessment that has not yet become due is not eliminated by foreclosure of: (i) a property tax lien, or (ii) the lien for any past due portion of the Assessment. Additionally, in the event of a sale or transfer of the Property by Property Owner (excluding a transfer as part of a foreclosure sale for a past due portion of the Assessment), the obligations under the Financing Documents, including, without limitation, any unpaid installments of the Assessment then due and owing and the portion of the Assessment that has not yet become due, will be transferred to the succeeding owner without recourse on Local Government or Authorized Representative.

3. After this Notice of Contractual Assessment Lien is recorded in the real property records of the county in which the Property is located as provided under Section 399.013 of the PACE Act, the lien created by the Assessment may not be contested on the basis that the improvement is not a "qualified improvement" or the project is not a "qualified project", as such terms are defined in Section 399.002 of the PACE Act.

EXECUTED on _____, _____.

LOCAL GOVERNMENT:
Hidalgo County, Texas

By: Lower Rio Grande Valley Development Council

Name: _____

Title: _____

AUTHORIZED REPRESENTATIVE
Pursuant to Tex. Local Gov't Code §399.006(b)

ACKNOWLEDGEMENT

STATE OF TEXAS §

COUNTY OF _____ §

This Notice of Contractual Assessment Lien pursuant to Property Assessed Clean Energy Act was acknowledged before me on _____, _____ by _____, _____, on behalf of _____, Texas.

_____

_____(print name)

NOTARY PUBLIC, STATE OF TEXAS

INDEXING INSTRUCTION:

Grantor: _____, Property Owner
Grantees: _____, Local Government
_____, Lender

After recording, return to- _____
_____
_____
_____

EXHIBIT A

PROPERTY DESCRIPTION

EXHIBIT B

QUALIFIED IMPROVEMENTS

EXHIBIT C

ASSESSMENT

Assessment Payment Schedule

Assessment Total:
Payment Frequency:
Interest Rate:

Payment Date	Total Payment	Principal Paid	Interest Paid	Administration Fee	Remaining Balance

PACE LENDER CONTRACT

THIS PROPERTY ASSESSED CLEAN ENERGY ("PACE") LENDER CONTRACT (the "**Lender Contract**") is made as of the _____ day of _____, _____, by and between County of Hidalgo, Texas ("**Local Government**") and _____ ("**Lender**").

RECITALS

A. The Property Assessed Clean Energy Act ("**PACE Act**"), Texas Local Government Code Chapter 399, authorizes the governing body of a local government to establish a program and designate a region within the local government's jurisdiction within which an authorized representative of the local government may enter into written contracts with the record owners of commercial, industrial, agricultural, and large multifamily residential (5 or more dwelling units) real property to impose assessments on the property to finance the cost of permanent improvements fixed to the property intended to decrease water or energy consumption or demand.

B. Local Government has established a program under the PACE Act pursuant to a Resolution dated _____, adopted by the Hidalgo County Commissioners Court (the "**PACE Program**"), and has designated the Lower Rio Grande Valley Development Council ("**Authorized Representative**") as the representative authorized to enter into the Assessment, Owner Contract and Lender Contract described herein, and has designated the entire territory within the County of Hidalgo jurisdiction as a region ("**Region**") within which the Authorized Representative and the record owners of such real property may enter into written contracts to impose assessments to repay the financing by owners of qualified improvements on the owner's property pursuant to the PACE Program.

C. Pursuant to Application number _____, _____ ("**Property Owner**") has applied to Local Government to participate in the PACE Program with respect to certain real property located at _____, _____, Texas, _____ (the "**Property**") by installing or modifying on the Property certain permanent improvements which are intended to decrease water or energy consumption or demand, and which are or will be fixed to the Property as "qualified improvements", as defined in Section 399.002 of the PACE Act (the "**Qualified Improvements**"). The installation or modification of such Qualified Improvements on the Property will be a "qualified project" as defined in Section 399.002 of the PACE Act (the "**Project**").

D. Property Owner and Local Government have entered into a written contract as required by Section 399.005 of the PACE Act, a copy of which is attached hereto as Exhibit A and made a part hereof (the "**Owner Contract**"), in which Property Owner has requested that Local Government impose an assessment (the "**Assessment**") on the Property as set forth in the Notice Of Contractual Assessment Lien Pursuant To Property Assessed Clean Energy Act to be

filed in the in the Official Public Records of Hidalgo County, Texas (the "**Notice of Contractual Assessment Lien**"), a copy of which is attached to the Owner Contract as Exhibit A, to repay the financing of such Qualified Improvements. The Property, Qualified Improvements and Assessment are more fully described in the Notice of Contractual Assessment Lien.

E. Financing for the Project (the "**Financing**") will be provided to Property Owner by Lender in accordance with financing documents which are described or listed on Exhibit B attached hereto and made a part hereof (the "**Financing Documents**"). Such Financing includes only those costs and fees for which an assessment may be imposed under the PACE Act. This Lender Contract is entered into between Local Government and Lender as required by Section 399.006(c) of the PACE Act to provide for repayment of the Financing secured by the Assessment.

F. As required by Section 399.010 of the PACE Act, Property Owner notified the holder(s) of any mortgage liens on the Property at least thirty (30) days prior to the date of the Owner Contract of Property Owner's intention to participate in the PACE Program. The written consent of each mortgage lien holder to the Assessment was obtained prior to the date of the Owner Contract, as shown by the copy of such consent(s) attached as Exhibit B to the Owner Contract.

AGREEMENT

The parties agree as follows:

1. Maintenance and Enforcement of Assessment. Lender agrees to provide the Financing for the Project in the total amount of $_____, according to the terms set out in the Financing Documents attached hereto as Exhibit B. In consideration for the Financing provided or to be provided by Lender for the Project, and subject to the terms and conditions of this Lender Contract, Local Government agrees to maintain and continue the Assessment for the benefit of Lender until the Financing, all contractual interest, any prepayment premium, additional penalties and interest imposed by the Lender under the Financing Documents according to the Financing Documents, and any statutory penalties, interest, attorney's fees, or costs accrued in the event of default are paid in full. Local Government will not release the Assessment until which time Lender notifies Local Government that all amounts owing have been paid in full. Local Government shall not sell, assign or transfer the Assessment or the assessment lien against the Property to any third party without the prior written consent of the Lender. Local Government agrees to enforce the assessment lien against the Property for the benefit of Lender in the event of a default by Property Owner in accordance with the provisions set forth in paragraph 6. Local Government shall have no obligation to repurchase the assessment and no liability to Lender should there be a default or an event of default in the payment thereof or should there be any other loss or expense suffered by Lender or under any other circumstances.

2. Installments. The Assessment, including the amount financed and contractual interest, is due and payable to Lender in installments as set forth in the Notice of Contractual Assessment Lien and Financing Documents. The Assessment shall include: (1) an application fee paid by Property Owner to Authorized Representative at loan closing, and (2) a recurring

administration fee paid by Property Owner to the Authorized Representative. The recurring administration fee amount shall be collected by Lender and paid to the Authorized Representative within thirty (30) days of receipt by Lender. The amounts due to the Authorized Representative are identified in Exhibit B hereto. As required by Section 399.009(a)(8) of the PACE Act, the period during which such installments are payable does not exceed the useful life of the Project. When the Assessment together with any prepayment premium, and/or default penalties and interest, if any, has been paid in full, Local Government's rights under this Lender Contract will cease and terminate. Upon notice from Lender that all amounts owing have been paid in full, Local Government will execute a release of the Assessment and this Lender Contract. Thereafter, the Authorized Representative will record the release.

3. Assignment of Right to Receive Installments. Lender will have the right to assign or transfer the right to receive the installments of the Assessment, provided all of the following conditions are met:

(a) The assignment or transfer is made to a qualified lender, which may be one of the following:

(1) Any federally insured depository institution such as a bank, savings bank, savings and loan association and federal or state credit union;

(2) Any insurance company authorized to conduct business in one or more states;

(3) Any registered investment company, registered business development company, or a Small Business Administration small business investment company;

(4) Any publicly traded entity; or

(5) Any private entity that:

(i) Has a minimum net worth of $5 million;

(ii) Has at least three years' experience in business or industrial lending or commercial real estate lending (including multifamily lending), or has a lending officer that has at least three years' experience in business or industrial lending or commercial real estate lending;

(iii) Can provide independent certification as to availability of funds; and

(iv) Has the ability to carry out, either directly or through a servicer, the bookkeeping and customer service work necessary to manage the assessment accounts

(b) Property Owner and Authorized Representative are notified in writing of the assignment or transfer and the address to which payment of the future installments should be mailed at least 30 days before the next installment is due according to the payment schedule included in the Financing Documents; and

(c) The assignee or transferee of the right to receive the installments executes an explicit written assumption of all of Lender's obligations under this Lender Contract.

Upon written notice to Property Owner and Authorized Representative of an assignment or transfer of the right to receive the installments that meets all of these conditions, the assignor shall be released of all of the obligations of the Lender under this Lender Contract accruing after the date of the assignment and all of such obligations shall be assumed by and transferred to the assignee. Any attempt to assign or transfer the right to receive the installments of the Assessment that does not meet all of these conditions is void.

4. Financing Responsibility. Lender assumes full responsibility for determining the financial ability of the Property Owner to repay the Financing and for advancing the funds as set forth in the Financing Documents and performing Lender's obligations and responsibilities thereunder.

5. Lien Priority and Enforcement. As provided in the Owner Contract and Section 399.014 of the PACE Act:

(a) Delinquent installments of the Assessment incur interest and penalties in the same manner and in the same amount as delinquent property taxes, viz., a delinquent installment incurs a penalty of 6% of the amount of the installment for the first calendar month it is delinquent plus 1% for each additional month or portion of a month the installment remains unpaid prior to July 1 of the year in which it becomes delinquent. However, an installment delinquent on July 1 incurs a total penalty of 12% of the amount of the delinquent installment without regard to the number of months it has been delinquent. A delinquent installment also accrues interest at the rate of 1% for each month or portion of a month the installment remains unpaid. Statutory penalties and statutory interest payable under this paragraph will be retained by Local Government to compensate it for the cost of enforcing the Assessment. Additional interest at any default rate imposed by Lender pursuant to the Financing Documents, along with any other fees and charges that become due pursuant to the Financing Documents may be assessed by Lender and retained by Lender.

(b) The Assessment, together with any penalties and interest thereon,

(1) is a first and prior lien against the Property from the date on which the Notice of Contractual Assessment Lien is filed in the Official Public Records of _____, as provided by Section 399.014 of the PACE Act, until the Assessment and any penalties and interest are paid; and

(2) such lien has the same priority status as a lien for any other ad valorem tax, pursuant to Section 399.014(a)(2) of the PACE Act.

(c) The lien created by the Assessment runs with the land, and any portion of the Assessment that has not yet become due is not eliminated by foreclosure of a property tax lien, according to Section 399.014(b) of the PACE Act. In the event of a sale or transfer of the Property by Property Owner, the obligation for the Assessment and the Property Owner's obligations under the Financing Documents will be transferred to the succeeding owner without recourse on Local Government or the Authorized Representative.

(d) In the event of a default by Property Owner in payment of the installments called for by the Financing Documents, the lien created by the Assessment will be enforced by Local Government in the same manner according to Texas Tax Code Secs. 33.41 to 34.23 that a property tax lien against real property may be enforced by a local government, to the extent the enforcement is consistent with Section 50, Article XVI, Texas Constitution.

(e) In a suit to collect a delinquent installment of the Assessment, Local Government will be entitled to recover costs and expenses, including attorney's fees in the amount of 15% of the total amount of the delinquent installment, penalties, and interest due, in the same manner according to Texas Tax Code Sec. 33.48 as in a suit to collect a delinquent property tax. Lender shall be entitled to any additional sums due to it under the Financing Documents in connection with a suit to collect a delinquent installment of the Assessment.

(f) After written notice of the Assessment is recorded in the real property records of the county in which the Property is located as provided under Section 399.013 of the PACE Act, the lien created by the Assessment may not be contested on the basis that the improvement is not a "qualified improvement" or the project is not a "qualified project", as such terms are defined in Section 399.002 of the PACE Act.

6. Servicing and Enforcement of Assessment.

(a) Servicing. The Assessment payments will be billed, collected, received, and disbursed in accordance with the procedures set out in the Financing Documents. Lender will be responsible for all servicing duties other than those specifically undertaken by Local Government in this Lender Contract. Local Government agrees to send an annual notice of assessment to the Property Owner with the annual property tax notice each year there is a PACE lien balance. This notification can be listed on said tax notice or as a separate notification.

(b) Remittances. Each of the parties covenants and agrees to promptly remit to the other party any payments incorrectly received by such party with respect to the Assessment after the execution of this Lender Contract.

(c) Default and Enforcement. In the event of a default in payment of any installment of the Assessment as specified in the Financing Documents, Lender agrees to take at least the following steps to collect the delinquent installment:

(1) Mail a written notice of delinquency and demand for payment to the Property Owner by both certified mail, return receipt requested, and first class mail; and

(2) Mail a second notice of delinquency to the Property Owner by both certified mail, return receipt requested, and first class mail at least 30 days after the date of the first notice if the delinquency is continuing.

If the Property Owner fails to cure the delinquency within 30 days after the mailing of the second notice of delinquency, the Lender or its designated servicer may notify the Authorized Representative who will certify to the Local Government in writing of a default by the Property Owner, and upon receipt of such certification and after doing its own due diligence, Local Government will enforce the assessment lien for the benefit of Lender pursuant to Tex. Local Gov't Code Sec. 399.014(c), in the same manner as a property tax lien against real property may be enforced, to the extent the enforcement is consistent with Section 50, Article XVI, Texas Constitution.

(d) Final Payment and Release. When the Assessment has been satisfied and paid in full, together with all interest and prepayment premiums, if any, provided under the Financing Documents and all costs, fees, penalties, and interest applicable under the PACE Act and payable to Lender or Local Government, Local Government's rights under the Owner Contract will cease and terminate. Upon notice from Lender that all amounts owing have been paid in full, Local Government will execute a release of the Assessment and the Owner Contract. Thereafter, the Authorized Representative will record the Release.

(e) Limitations on Local Government's Actions. Without the prior written consent of Lender, Local Government will not enter into any amendment or modification of or deviation from the Owner Contract. Local Government will not institute any legal action with respect to the Owner Contract, the Assessment, or the assessment lien without the prior written request of Lender.

(f) Limitations of Local Government's Obligations. Local Government undertakes to perform only such duties as are specifically set forth in this Lender Contract, and no implied duties on the part of Local Government are to be read into this Lender Contract. Local Government will not be deemed to have a fiduciary or other similar relationship with Lender. Local Government may request written instructions for action from Lender and refrain from taking action until it receives satisfactory written instructions. Local Government will have no liability to any person for following such instructions, regardless of whether they are to act or refrain from acting.

(g) Costs. No provisions of this Lender Contract will require Local Government to expend or risk its own funds or otherwise incur any financial liability in the performance of any of its duties hereunder.

7. Lender's Warranties and Representations. With respect to this Lender Contract, Lender hereby warrants and represents that on the date on which Lender executes this Lender Contract:

(a) Lender is a qualified lender under the PACE Program, as defined in paragraph 3(a) above, and is fully qualified under the PACE Program to enter into this Lender Contract and the Financing Documents;

(b) Lender has independently and without reliance upon Local Government conducted its own credit evaluation, reviewed such information as it has deemed adequate and appropriate, and made its own analysis of the Owner Contract, the Project, and Property Owner's financial ability to perform the financial obligations set out in the Financing Documents; and

(c) Lender has not relied upon any investigation or analysis conducted by, advice or communication from, or any warranty or representation by Local Government or any agent or employee of Local Government, express or implied, concerning the financial condition of the Property Owner or the tax or economic benefits of an investment in the Assessment.

8. Written Contract Required by the PACE Act. This Lender Contract constitutes a written contract between Local Government and Lender, as required under Section 399.006 (c) of the PACE Act.

9. Construction and Definitions. This Lender Contract is to be construed in accordance with and with reference to the PACE Program and PACE Act. Terms used herein, and not otherwise defined herein, shall have the meanings ascribed to them in: (1) the Notice of Contractual Assessment Lien, (2) the Owner Contract, (3) the PACE Program, and/or (4) the PACE Act.

10. Binding Effect. This Lender Contract is binding upon and shall inure to the benefit of the parties hereto and their respective heirs, representatives, successors, and assigns.

11. Notices. All notices and other communications required or permitted hereunder shall be in writing and mailed by certified mail, return receipt requested, addressed to the other party at the address stated below the signature of such party or at such other address as such party may from time to time designate in writing to the other party, and shall be effective from the date of receipt.

12. Governing Law. This Lender Contract shall in all respects be governed by and construed in accordance with the laws of the State of Texas.

13. Entire Agreement. This Lender Contract constitutes the entire agreement between the parties with respect to the subject matter hereof and shall not be amended or altered in any manner except by a document in writing executed by both parties.

14. Captions. Paragraph and section titles are for convenience of reference only and shall not be of any legal effect.

15. Counterparts. This Lender Contract may be executed in any number of counterparts, each counterpart may be delivered originally or by electronic transmission, all of which when taken together shall constitute one agreement binding on the parties, notwithstanding that all parties are not signatories to the same counterpart.

16. Interest. Interest and penalties in the event of default, as provided above, are explicitly authorized by Section 399.014(d) of the PACE Act. However, in no event will the total amount of interest on the Assessment, including statutory interest payable to Local Government and contractual interest payable to Lender under the Financing Documents, exceed the maximum amount or rate of nonusurious interest that may be contracted for, charged, or collected under Texas law (the "usury limit"). If the total amount of interest payable to Local Government and Lender exceeds the usury limit, interest payable to Local Government will be reduced and any interest in excess of the usury limit will be credited to the amount payable to Local Government or refunded. This provision overrides any conflicting provisions in this Lender Contract.

17. Certification. Local Government certifies that the PACE Program has been duly adopted and is in full force and effect on the date of this Lender Contract. Property Owner has represented to Lender and Local Government that the Project is a "qualified project" as defined in the PACE Program and Section 399.002 of the PACE Act. The Assessment has been imposed on the Property as a lien in accordance with the PACE Owner Contract and the PACE Act. Local Government has not assigned or transferred any interest in the Assessment or the PACE Owner Contract.

18. Construction Terms. If this Lender Contract includes requirements related to construction of the Project and disbursement of Financing, such requirements are set forth in Exhibit C attached hereto and incorporated herein by reference. Such requirements may include, among other things, (1) the disbursement schedule and (2) any holdback amount to be funded following verification of final project completion.

LENDER:

_____

By:_____

Name:		
Title:		
Address:		

LOCAL GOVERNMENT:

Hidalgo County, Texas

By: The Lower Rio Grande Valley Development Council
AUTHORIZED REPRESENTATIVE
Pursuant to Tex. Local Gov't Code §399.006(b)

Name:	
Title:	
Address:	

EXHIBIT A

OWNER CONTRACT

EXHIBIT B

FINANCING DOCUMENTS

Assessment Payment Schedule

Assessment Total:
Payment Frequency:
Interest Rate:

Payment Date	Total Payment	Principal Paid	Interest Paid	Administration Fee	Remaining Balance

Financing Documents

Document Title	Parties	Date Executed

EXHIBIT C

CONSTRUCTION TERMS

[if applicable]

Date	Draw down Amount	Purpose

PACE OWNER CONTRACT

THIS PROPERTY ASSESSED CLEAN ENERGY ("PACE") OWNER CONTRACT ("**Owner Contract**") is made as of the _____ day of _____, _____, by and between Hidalgo County, Texas ("**Local Government**"), and _____ ("**Property Owner**").

RECITALS

A. The Property Assessed Clean Energy Act ("**PACE Act**"), Texas Local Government Code Chapter 399, authorizes the governing body of a local government to establish a program and designate a region within the local government's jurisdiction within which an authorized representative of the local government may enter into written contracts with the record owners of commercial, industrial, agricultural, and large multifamily residential (5 or more dwelling units) real property to impose assessments on the property to finance the cost of permanent improvements fixed to the property intended to decrease water or energy consumption or demand.

B. Local Government has established a program under the PACE Act pursuant to a resolution dated _____, adopted by the Hidalgo County Commissioners Court (the "**PACE Program**"), and has designated the Lower Rio Grande Valley Development Council ("**Authorized Representative**") as the representative authorized to enter into the Assessment, Owner Contract and Lender Contract described herein, and has designated the entire territory within the County of Hidalgo jurisdiction as a region ("Region") within which the Authorized Representative and the record owners of such real property may enter into written contracts to impose assessments to repay the financing by owners of qualified improvements on the owner's property pursuant to the PACE Program.

C. Property Owner is the legal and record owner of the qualified "real property," as defined in Section 399.002 of the PACE Act, within the Region located at _____, _____, Texas, _____ (the "**Property**").

D. Pursuant to Application number _____, Property Owner has applied to Local Government to participate in the PACE Program by installing or modifying on the Property certain permanent improvements which are intended to decrease water or energy consumption or demand, and which are or will be fixed to the Property as "qualified improvements", as defined in Section 399.002 of the PACE Act (the "**Qualified Improvements**"). The installation or modification of such Qualified Improvements on the Property will be a "qualified project" as defined in Section 399.002 of the PACE Act (the "**Project**"). Property Owner has requested that Local Government enter into this Owner Contract pursuant to the PACE Act and the PACE Program and has requested Local Government to impose an assessment (the "**Assessment**") on the Property as set forth in the Notice Of Contractual Assessment Lien Pursuant To Property Assessed Clean Energy Act to be filed in the in the Official Public Records of Hidalgo County, Texas (the "**Notice of Contractual**

Assessment Lien"), a copy of which is attached hereto as Exhibit A and made a part hereof, to repay the financing of such Qualified Improvements. The Property, Qualified Improvements and Assessment are more fully described in the Notice of Contractual Assessment Lien.

E. The financing of such Qualified Improvements will be provided to Property Owner by _____ ("**Lender**"), a qualified lender selected by Property Owner, pursuant to a written contract executed by Lender and Local Government as required by Section 399.006(c) of the PACE Act and by the PACE Program (the "**Lender Contract**"). The financing will include only those costs and fees for which an assessment may be imposed under the PACE Act. Local Government has agreed to maintain and continue the Assessment for the benefit of Lender until such financing is repaid in full and to release the Assessment upon notice from Lender of such payment, or foreclose the lien securing the Assessment for the benefit of Lender upon notice from Lender of a default by Property Owner.

F. As required by Section 399.010 of the PACE Act, Property Owner notified the holder(s) of any mortgage liens on the Property at least thirty (30) days prior to the date of this Owner Contract of Property Owner's intention to participate in the PACE Program. The written consent of each mortgage holder to the Assessment was obtained prior to the date of this Owner Contract and is attached hereto as Exhibit B and made a part hereof.

AGREEMENT

The parties agree as follows:

1. Imposition of Assessment. In consideration for the financing advanced or to be advanced to Property Owner by Lender for the Project under the PACE Program pursuant to the Lender Contract, Property Owner hereby requests and agrees to the imposition by Local Government of the Assessment in the amount of $_____, as set forth in the Notice of Contractual Assessment Lien, including all interest, fees, penalties, costs, and other sums due under and/or authorized by the PACE Act, PACE Program and the financing documents between Property Owner and Lender (the "**Financing Documents**") which are described or listed on Exhibit C attached hereto and made a part hereof by reference. Property Owner promises and agrees to pay such amount and interest to Local Government, in care of or as directed by Lender, in satisfaction of the Assessment imposed pursuant to the Owner Contract and the PACE Act. Accordingly, Local Government hereby imposes the Assessment on the Property to secure the payment of such amount, in accordance with the requirements of the PACE Program and the provisions of the PACE Act.

2. Maintenance and Enforcement of Assessment. In consideration for Lender's agreement to advance financing to Property Owner for the Project pursuant to the Financing Documents, Local Government agrees to maintain and continue the Assessment on the Property for the benefit of Lender until the Assessment, including all interest, fees, penalties, costs, and other sums due under and/or authorized by the PACE Act, PACE Program and the Financing Documents are paid in full, and to release the Assessment upon notice from Lender of such payment. Local Government agrees to undertake reasonable efforts to enforce the Assessment against the Property for the benefit of Lender in the event of a default by Property Owner. Local Government agrees to send an annual notice of assessment to the Property Owner with the

annual property tax notice each year there is a PACE lien balance. This notification can be listed on said tax notice or as a separate notification.

3. Installments. The Assessment, including the amount financed and contractual interest, is due and payable in installments as set forth in the Notice of Contractual Assessment Lien and the Financing Documents. The Assessment shall include: (1) an application fee paid by Property Owner to Authorized Representative at loan closing, and (2) a recurring administration fee paid by Property Owner to the Authorized Representative. The recurring administration fee amount shall be collected by Lender and paid to the Authorized Representative within thirty (30) days of receipt by Lender. The amounts due to the Authorized Representative are identified in Exhibit C hereto. As required by Section 399.009(a) (8) of the PACE Act, the period during which such installments are payable does not exceed the useful life of the Project. When the Assessment together with any prepayment premium, and/or default penalties and interest, if any, has been paid in full, Local Government's rights under this Owner Contract will cease and terminate. Upon notice from Lender that all amounts owing have been paid in full, Local Government will execute a release of the Assessment and this Owner Contract. Thereafter, the Authorized Representative will record the release.

4. Assignment of Right to Receive Installments. Lender will have the right to assign or transfer the right to receive the installments of the financing secured by the Assessment, provided all of the following conditions are met:

(a) The assignment or transfer is made to a qualified lender as defined in the Lender Contract;

(b) Property Owner and Authorized Representative are notified in writing of the assignment or transfer and the address to which payment of the future installments should be mailed at least 30 days before the next installment is due according to the payment schedule included in the Notice of Contractual Assessment Lien and the Financing Documents; and

(c) The assignee or transferee of the right to receive the payments executes an explicit written assumption of all of Lender's obligations under Lender Contract.

Upon written notice to Property Owner and Authorized Representative of an assignment or transfer of the right to receive the installments that meets all of these conditions, the assignor shall be released of all of the obligations of the Lender under such Lender Contract accruing after the date of the assignment assumed by and transferred to such assignee or transferee and all of such obligations shall be assumed by and transferred to the assignee. Any attempt to assign or transfer the right to receive the installments that does not meet all of these conditions is void.

5. Lien Priority and Enforcement. Pursuant to Section 399.014 of the PACE Act,

(a) Delinquent installments of the Assessment will incur interest and penalties in the same manner and in the same amount as delinquent property taxes, viz., a delinquent installment incurs a penalty of 6% of the amount of the installment for the first calendar month it is delinquent plus 1% for each additional month or portion of a month the installment remains unpaid prior to July 1 of the year in which it becomes delinquent.

However, an installment delinquent on July 1 incurs a total penalty of 12% of the amount of the delinquent installment without regard to the number of months it has been delinquent. A delinquent installment will also accrue interest at the rate of 1% for each month or portion of a month that the installment remains unpaid. Statutory penalties and statutory interest payable under this paragraph will be retained by Local Government to compensate it for the cost of enforcing the Assessment. Additional interest at any default rate imposed by Lender pursuant to the Financing Documents, along with any other fees and charges that become due pursuant to the Financing Documents may be assessed by Lender and retained by Lender.

(b) The Assessment, together with any penalties and interest thereon,

(1) is a first and prior lien against the Property from the date on which the Notice of Contractual Assessment Lien is filed in the Official Public Records of Hidalgo County as provided by Section 399.014 of the PACE Act, until the financing secured by the Assessment and any penalties and interest are paid; and

(2) such lien has the same priority status as a lien for any other ad valorem tax, pursuant to Section 399.014(a)(2) of the PACE Act.

(c) The lien created by the Assessment runs with the land, and according to Section 399.014(b) of the PACE Act, any portion of the Assessment that has not yet become due is not eliminated by foreclosure of: (i) a property tax lien, or (ii) the lien for any past due portion of the Assessment. In the event of a sale or transfer of the Property by Property Owner, the obligation for the Assessment and the Property Owner's obligations under the Financing Documents will be transferred to the succeeding owner without recourse on Local Government or Authorized Representative.

(d) In the event of a default by Property Owner in payment of the installments called for by the Financing Documents, the lien created by the Assessment will be enforced by Local Government in the same manner according to Texas Tax Code Secs. 33.41 to 34.23 that a property tax lien against real property may be enforced by a local government, to the extent the enforcement is consistent with Section 50, Article XVI, Texas Constitution.

(e) In a suit to collect a delinquent installment of the Assessment, Local Government will be entitled to recover costs and expenses, including attorney's fees in the amount of 15% of the total amount of the delinquent installment, penalties, and interest due, in the same manner according to Texas Tax Code Sec. 33.48 as in a suit to collect a delinquent property tax. Lender shall be entitled to any additional sums due to it under the Financing Documents in connection with a suit to collect a delinquent installment of the Assessment.

(f) After written notice of the Assessment is recorded in the real property records of the county in which the Property is located as provided under Section 399.013 of the PACE Act, the lien created by the Assessment may not be contested on the basis

that the improvement is not a "qualified improvement" or the project is not a "qualified project", as such terms are defined in Section 399.002 of the PACE Act.

6. Written Contract Required by PACE Act. This Owner Contract constitutes a written contract for the Assessment between the Property Owner and Local Government as required by Section 399.005 of the PACE Act. The Notice of Contractual Assessment Lien will be recorded in the Official Public Records of Hidalgo County as notice of the contractual Assessment, in accordance with the requirements of Section 399.013 of the PACE Act.

7. Qualified Improvements. Property Owner agrees that all improvements purchased, constructed and/or installed through financing obtained pursuant to this Owner Contract shall be permanently affixed to the Property and will transfer with the Property to the transferee in the event of and sale or assignment of the Property.

8. Water or Energy Savings. For so long as the Assessment encumbers the Property, Property Owner agrees on or before January 31st of each year, to report to Authorized Representative the water or energy savings realized through the Project in accordance with the reporting requirements established by the Local Government.

9. Construction and Definitions. This Owner Contract is to be construed in accordance with and with reference to the PACE Program and PACE Act. Terms used herein, and not otherwise defined herein, shall have the meanings ascribed to them in: (1) the PACE Program, and/or (2) the PACE Act.

10. Binding Effect. This Owner Contract inures to the benefit of Local Government and is binding upon Property Owner, its heirs, successors, and assigns.

11. Notices. All notices and other communications required or permitted by this Owner Contract shall be in writing and mailed by certified mail, return receipt requested, addressed to the other party at its address shown below the signature of such party or at such other address as such party may from time to time designate in writing to the other party, and shall be effective from the date of receipt.

12. Governing Law. This Owner Contract shall in all respects be governed by and construed in accordance with the laws of the State of Texas.

13. Entire Agreement. This Owner Contract constitutes the entire agreement between Local Government and Property Owner with respect to the subject matter hereof and may not be amended or altered in any manner except by a document in writing executed by both parties.

14. Further Assurances. Property Owner further covenants and agrees to do, execute and deliver, or cause to be done, executed, and delivered all such further acts for implementing the intention of this Owner Contract as may be reasonably necessary or required.

15. Captions. Paragraph and section titles are for convenience of reference only and shall not be of any legal effect.

16. Interest. Interest and penalties in the event of default, as provided above, are explicitly authorized by Section 399.014(d) of the PACE Act. However, in no event will the total amount of interest on the Assessment, including statutory interest payable to Local Government and contractual interest payable to Lender under the Financing Documents, exceed the maximum amount or rate of nonusurious interest that may be contracted for, charged, or collected under Texas law (the "usury limit"). If the total amount of interest payable to Local Government and Lender exceeds the usury limit, the interest payable to Local Government will be reduced and any interest in excess of the usury limit will be credited to the amount payable to Local Government or refunded. This provision overrides any conflicting provisions in this Owner Contract.

17. Counterparts. This Owner Contract may be executed in any number of counterparts, each counterpart may be delivered originally or by electronic transmission, all of which when taken together shall constitute one agreement binding on the parties, notwithstanding that all parties are not signatories to the same counterpart.

18. Costs. No provisions of this Owner Contract will require Local Government to expend or risk its own funds or otherwise incur any financial liability in the performance of any of its duties hereunder.

19. Construction Terms. If the Lender Contract includes requirements related to construction of the Project and disbursement of Financing, such requirements are set forth in Exhibit D attached hereto and incorporated herein by reference. Such requirements may include, among other things, (1) the disbursement schedule and (2) any holdback amount to be funded following verification of final project completion.

PROPERTY OWNER:

_____

By:_____

Name:		
Title:		
Address:		

ACKNOWLEDGEMENT

STATE OF TEXAS §

COUNTY OF _____ §

This PACE Owner Contract pursuant to Property Assessed Clean Energy Act was acknowledged before me on _____, _____ by _____, _____, on behalf of _____.

_____

_____(print name)

NOTARY PUBLIC, STATE OF TEXAS

LOCAL GOVERNMENT:

Hidalgo County

By: Lower Rio Grande Valley Development Council
AUTHORIZED REPRESENTATIVE
Pursuant to Tex. Local Gov't Code §399.006(b)

Name:		
Title:		
Address:		

ACKNOWLEDGEMENT

STATE OF TEXAS §

COUNTY OF _____ §

This PACE Owner Contract pursuant to Property Assessed Clean Energy Act was acknowledged before me on _____, _____ by _____, _____, on behalf of _____, Texas.

_____

_____(print name)

NOTARY PUBLIC, STATE OF TEXAS

EXHIBIT A

NOTICE OF CONTRACTUAL ASSESSMENT LIEN
PURSUANT TO
PROPERTY ASSESSED CLEAN ENERGY ACT

EXHIBIT B

MORTGAGE HOLDER(S) CONSENT

EXHIBIT C

FINANCING DOCUMENTS

Assessment Payment Schedule

Assessment Total:
Payment Frequency:
Interest Rate:

Payment Date	Total Payment	Principal Paid	Interest Paid	Administration Fee	Remaining Balance

Financing Documents

Document Title	Parties	Date Executed

EXHIBIT D

CONSTRUCTION TERMS

[if applicable]

Date	Draw down Amount	Purpose

AI-60044 **County Judge's Office** **5. D.**

CC - REGULAR

Meeting Date: 05/30/2017

Submitted For: Michael Leo, COUNTY JUDGE **Submitted By:** Virginia Jones, COUNTY JUDGE

Department: COUNTY JUDGE

Information

CAPTION

Discussion and action on the Amendment to Tax Abatement Agreement effective as of December 13, 2016 between Hidalgo County and Wonderful Citrus Packing LLC and approve order on same.

BACKGROUND

Fiscal Impact

Attachments

ORDER
LEGAL
amendment

Form Review

Inbox	Reviewed By	Date
Budget & Management	Veronica Ortiz	05/26/2017 11:44 AM
Linda Flores	Linda Flores	05/26/2017 02:24 PM
Final Approval	Monica Salinas	05/26/2017 02:58 PM

Form Started By: Virginia Jones Started On: 05/26/2017 10:48 AM

Final Approval Date: 05/26/2017

ORDER APPROVING AMENDMENT TO TAX ABATEMENT AGREEMENT EFFECTIVE AS OF DECEMBER 13, 2016, BETWEEN HIDALGO COUNTY AND WONDERFUL CITRUS PACKING LLC

WHEREAS, the Commissioners Court deemed it to be in the best interest of Hidalgo County, Texas (the "***County***") to enter into that certain Tax Abatement Agreement between Hidalgo County, and Wonderful Citrus Packing LLC effective December 13 2016 (the "***Agreement***"), in accordance with the then effective Guidelines and Criteria for Granting Tax Abatements in Hidalgo County, Texas (the "***Guidelines and Criteria***"), and, in accordance with the Guidelines and Criteria, the County entered into the Agreement with the Company;

WHEREAS, the Company has requested that the Agreement be amended to allow the Company additional time to comply with the requirement in the Agreement to file certain construction plans by June 1, 2017;

WHEREAS, the County has determined that extending the date for compliance with such requirement does not reduce the benefit to the County from the Agreement; and

WHEREAS, the County and the Company now deem it necessary and appropriate to amend the Agreement to so extend the time for such filing, all as set forth in that certain *Amendment to Tax Abatement Agreement Effective December 13, 2016 between Hidalgo County, Texas and Wonderful Citrus Packing LLC* (the "***Amendment***") to be entered into effective May 30, 2017;

NOW THEREFORE:

BE IT ORDERED BY THE COMMISSIONERS COURT OF HIDALGO COUNTY, TEXAS:

SECTION 1. APPROVAL OF AMENDMENT. The Amendment is hereby approved in the form attached hereto as Exhibit "A", and the County Judge is hereby authorized to execute, and the County Clerk is authorized to attest, the Amendment on behalf of the County and deliver same, and when fully executed and delivered, the Amendment shall become a valid and binding obligation of the County in accordance with its terms.

SECTION 2 EFFECTIVE DATE. This Order shall become effective immediately upon the passage hereof.

PASSED, APPROVED, ADOPTED AND ORDERED this the 30th day of May, 2017, by the Commissioners Court of Hidalgo County, Texas.

SIGNED AND ENTERED ON THE ABOVE DATE BY THE FOLLOWING MEMBERS OF THE HIDALGO COUNTY COMMISSIONERS COURT

_____
RAMON GARCIA
County Judge

_____
DAVID L. FUENTES
County Commissioner, Pct. 1

_____
EDUARDO "EDDIE" CANTU
County Commissioner, Pct. 2

_____
JOE M. FLORES
County Commissioner, Pct.3

_____
JOSEPH PALACIOS
County Commissioner, Pct. 4

Attested to:

_____
ARTURO GUAJARDO, JR.
County Clerk

APPROVED AS TO FORM:
ATLAS, HALL AND RODRIGUEZ, LLP

By: _____
Stephen L. Crain

EXHIBIT A

FORM OF

AMENDMENT TO
TAX ABATEMENT AGREEMENT EFFECTIVE AS OF DECEMBER 13, 2016
BETWEEN HIDALGO COUNTY, TEXAS
AND
WONDERFUL CITRUS PACKING LLC

I reviewed the amendment to the Wonderful Citrus agreement and I have no concerns.

Letty Chavez

From: Debra Goetz [mailto:dlg@atlashall.com]
Sent: Thursday, May 25, 2017 4:48 PM
To: 'Michael Leo'
Cc: 'Virginia R Jones'; 'Arcy Duran'; 'Letty Chavez'; 'Erika Reyna'
Subject: RE: Tax Abatement Agreement with Wonderful Citrus Packing LLC

The draft of the amendment is attached for your review. Please let me know if you have any questions or comments. Also, please send to me a copy of the executed agreement.

Thanks,

Debra L. Goetz
ATLAS, HALL & RODRIGUEZ, LLP
818 Pecan Blvd. (78501)
P. O. Box 3725
McAllen, Texas 78502-3725
Direct Dial Number (956) 632-8242
Main Number (956) 682-5501
Fax Number (956) 686-6109
E-mail Address dlg@atlashall.com



E-MAIL NOTICE -- This transmission may be: (1) subject to the Attorney-Client Privilege, (2) an attorney work product, or (3) strictly confidential. If you are not the intended recipient of this message, you may not disclose, print, copy or disseminate this information. If you have received this in error, please reply and notify the sender (only) and delete the message. Unauthorized interception of this e-mail is a violation of federal criminal law.

This communication does not reflect an intention by the sender or the sender's client or principal to conduct a transaction or make any agreement by electronic means. Nothing contained in this message or in any attachment shall satisfy the requirements for a writing, and nothing contained herein shall constitute a contract or electronic signature under the Electronic Signatures in Global and National Commerce Act, any version of the Uniform Electronic Transactions Act or any other statute governing electronic transactions.

Michael:

Revised version of the order is attached for your review. The only change is the update to the Precinct 1 commissioner's name on the signature page.

Debra L. Goetz
ATLAS, HALL & RODRIGUEZ, LLP
818 Pecan Blvd. (78501)
P. O. Box 3725

McAllen, Texas 78502-3725
Direct Dial Number (956) 632-8242
Main Number (956) 682-5501
Fax Number (956) 686-6109
E-mail Address dlg@atlashall.com



E-MAIL NOTICE -- This transmission may be: (1) subject to the Attorney-Client Privilege, (2) an attorney work product, or (3) strictly confidential. If you are not the intended recipient of this message, you may not disclose, print, copy or disseminate this information. If you have received this in error, please reply and notify the sender (only) and delete the message. Unauthorized interception of this e-mail is a violation of federal criminal law.

This communication does not reflect an intention by the sender or the sender's client or principal to conduct a transaction or make any agreement by electronic means. Nothing contained in this message or in any attachment shall satisfy the requirements for a writing, and nothing contained herein shall constitute a contract or electronic signature under the Electronic Signatures in Global and National Commerce Act, any version of the Uniform Electronic Transactions Act or any other statute governing electronic transactions.

From: Debra Goetz [mailto:dlg@atlashall.com]
Sent: Thursday, May 25, 2017 5:18 PM
To: 'Michael Leo'
Cc: 'Virginia R Jones'; 'Arcy Duran'; 'Letty Chavez'; 'Erika Reyna'
Subject: RE: Tax Abatement Agreement with Wonderful Citrus Packing LLC

Michael:

Attached is the draft of an order adopting the proposed amendment. Please let me know if you have any questions or comments.

Thank you,

Debra L. Goetz
ATLAS, HALL & RODRIGUEZ, LLP
818 Pecan Blvd. (78501)
P. O. Box 3725
McAllen, Texas 78502-3725
Direct Dial Number (956) 632-8242
Main Number (956) 682-5501
Fax Number (956) 686-6109
E-mail Address dlg@atlashall.com



E-MAIL NOTICE -- This transmission may be: (1) subject to the Attorney-Client Privilege, (2) an attorney work product, or (3) strictly confidential. If you are not the intended recipient of this message, you may not disclose, print, copy or disseminate this information. If you have received this in error, please reply and notify the sender (only) and delete the message. Unauthorized interception of this e-mail is a violation of federal criminal law.

This communication does not reflect an intention by the sender or the sender's client or principal to conduct a transaction or make any agreement by electronic means. Nothing contained in this message or in any attachment shall satisfy the requirements for a writing, and nothing contained herein shall constitute a contract or electronic signature under the Electronic Signatures in Global and National Commerce Act, any version of the Uniform Electronic Transactions Act or any other statute governing electronic transactions.

AMENDMENT TO

TAX ABATEMENT AGREEMENT EFFECTIVE AS OF DECEMBER 13, 2016

BETWEEN HIDALGO COUNTY, TEXAS

AND

WONDERFUL CITRUS PACKING LLC

This amendment (the "**Amendment**") is entered into effective as of May 30 2017, between Hidalgo County, a political subdivision of the State of Texas (the "**County**"), duly acting herein by and through its duly authorized representatives, pursuant to an Order dated May 30, 2017, by the Hidalgo County Commissioners' Court (hereinafter referred to as the "**Commissioners Court**") and Wonderful Citrus Packing LLC, a Delaware limited liability company (the "**Company**"), and amends that certain Tax Abatement Agreement (the "**Agreement**") between the County and the Company entered into effective December 13, 2016.

WITNESSETH:

WHEREAS, in order to maintain and enhance the commercial and industrial economic and employment base of the County, the Commissioners Court deemed it to be in the best interest of the County to enter into the Agreement with the Company in accordance with then effective Guidelines and Criteria for Granting Tax Abatements in Hidalgo County, Texas (the "**Guidelines and Criteria**");

WHEREAS, pursuant to the Guidelines and Criteria and the Property Redevelopment and Tax Abatement Act, Subchapter C, V.A.T.C., Texas Tax Code §312 et seq., as amended ("**Act**"), the County entered into the Agreement concerning the Project (as defined in the Agreement);

WHEREAS, the Company has requested that the Agreement be amended to allow additional time to comply with the requirement in the Agreement to file construction plans for part of the Project by June 1, 2017; and

WHEREAS, the County has determined that extending the date for compliance with such requirement does not reduce the benefit to the County from the Agreement;

NOW, THEREFORE, the County and the Company, for good and valuable consideration, the adequacy and receipt of which is hereby acknowledged, do hereby contract, covenant and agree as follows:

1. **Definitions**. All terms defined in the Agreement and used herein shall have the meaning set forth therein unless otherwise defined herein.

2. **Representations and Warranties**. The Company represents and warrants to the County as follows:

(a) The Company is duly qualified to conduct business in Texas, including, without limitation, building the improvements and operating the Facility.

(b) This Amendment constitutes the valid and enforceable obligation of the Company in accordance with its terms.

(c) The Company has all necessary right, title, license and authority to enter into this Amendment and the execution and performance of this Agreement as amended by this Amendment by the Company have been duly authorized by all necessary laws, resolutions and corporate or other entity action.

3. **Amendment to Agreement**. In order to allow the Company additional time to file the construction plans for the blend room portion of the Facility, Section 4.01 of the Agreement is amended by replacing "June 1, 2017" with "August 31, 2017". Section 4.01 of the Agreement, as so amended, reads in its entirety as follows:

> 4.01 Owner has provided documentation to the County concerning the commencement of construction of the Project and agrees to continue to provide such documentation as required by the County concerning the continuation of the construction and modernization of improvements pursuant to this Agreement. Without limiting the generality of the foregoing, Owner shall file with the County construction plans for the blend room portion of the Facility by August 31, 2017, and for the not-from-concentrate and tank farm portion of the Facility by June 1, 2018. The construction plans as filed shall be deemed to be incorporated herein by reference and made a part hereof for all purposes, and the Facility shall be completed in substantial conformity to said plans. Owner may elect to amend or modify the construction plans, provided the amendments or modifications comply with all applicable codes, rules and ordinances, and are not otherwise contrary to this Agreement.

4. **Current Tax**. The Company has provided tax certificates verifying that no taxes are past due with respect to all real property owned by the Company within the Zone.

5. **Commissioners Court Authorization**. This Amendment was authorized by Order of the Commissioners Court dated the 30th day of May 2017, authorizing the County Judge to execute this Agreement on behalf of the County.

6. **Severability**. In the event any paragraph, subparagraph, sentence, phrase or word herein is held invalid, illegal, or unenforceable, the balance of this Amendment and the

Agreement shall stand, shall be enforceable and shall be read as if the parties intended at all times to delete said invalid paragraph, subparagraph, sentence, phrase and word. In such event there shall be substituted for such deleted provision as similar in terms and in effect to such deleted provision as may be valid, legal and enforceable.

7. **Applicable Law**. This Amendment shall be construed under the laws of the State of Texas and is performable in Hidalgo County, Texas.

8. **Ratification of Tax Abatement Agreement**. The Agreement, as modified hereby, is ratified and confirmed.

EXECUTED IN DUPLICATE ORIGINALS as of the 30th day of May, 2017.

WONDERFUL CITRUS PACKING LLC

By: _____
John Glenn
V.P. of Texas Juice Operations

HIDALGO COUNTY, TEXAS

By: _____
Ramon Garcia
Hidalgo County Judge

ATTEST:

_____
Arturo Guajardo, Jr.
Hidalgo County Clerk

APPROVED AS TO FORM FOR COUNTY:

Atlas, Hall & Rodriguez, L.L.P

By: _____
Stephen L. Crain

AI-59992 **District Clerk** **6. A.**

CC - REGULAR

Meeting Date: 05/30/2017

Submitted For: Julia Sullivan, PUBLIC AFFAIRS

Submitted By: Julia Sullivan, PUBLIC AFFAIRS

Department: PUBLIC AFFAIRS

Information

CAPTION

Resolution in Honor of Ernesto Cano for 32 years of dedicated and exceptional service to the judicial system and Hidalgo County District Clerk's Office.

BACKGROUND

Fiscal Impact

Attachments

Resolution in Honor of Ernesto Cano

Form Review

Inbox	Reviewed By	Date
Budget & Management	Veronica Ortiz	05/24/2017 04:45 PM
Final Approval	Monica Salinas	05/26/2017 02:58 PM

Form Started By: Julia Sullivan Started On: 05/24/2017 04:25 PM

Final Approval Date: 05/26/2017

RESOLUTION IN HONOR OF ERNESTO CANO FOR 32 YEARS OF SERVICE

WHEREAS, Mr. Ernesto "Neto" Cano is being honored for his exceptional work and dedication to the Hidalgo County District Clerk's Office after serving with distinction and integrity for the past 32 years; and

WHEREAS, a resident of the City of Edinburg, he was born to Mr. Pedro & Elvia Cano and he is the fifth of ten children. Mr. Cano is married to Mrs. Yanira Cano and they have 3 children: Giovanni, Tristian & Cristian; and

WHEREAS, a graduate of Edinburg High School, Mr. Cano began his career soon thereafter as a New Filings Clerk in the Hidalgo County District Clerk's Office under the Pauline Gonzalez administration; and

WHEREAS, after working in the New Filings Division, Mr. Cano was then reassigned to serve as a Deputy District Clerk for the 92nd District Court, among other courts throughout his tenure and currently serves as Deputy District Clerk for County Courts 1, 2, 4 & 5; and

WHEREAS, as a Deputy District Clerk Mr. Cano has strived to provide the courts and the public with exemplary public service and was dedicated in his responsibilities while maintaining a high standard of professionalism, establishing good working relationships with the public, other county employees, officials, supervisors and his fellow coworkers; and

WHEREAS, after serving for 32 years, Mr. Cano looks forward to spending more time with his family.

NOW, THEREFORE, BE IT PROCLAIMED that the Hidalgo County Commissioners Court does hereby honor Mr. Ernesto Cano for his outstanding service, dedication, and commitment during his years of service to the judicial system and the Hidalgo County District Clerk's Office, and on this day wishes him a long, healthy and fruitful retirement.

Approved this 30th day of May 2017.

RAMON GARCIA
County Judge

DAVID L. FUENTES
County Commissioner, Pct. 1

EDUARDO "EDDIE" CANTU
County Commissioner, Pct. 2

JOE M. FLORES
County Commissioner, Pct. 3

JOSEPH PALACIOS
County Commissioner, Pct. 4

Attest: ARTURO GUAJARDO, JR.
County Clerk

AI-59929 **District Attorney** **7. A.**

CC - REGULAR

Meeting Date: 05/30/2017

Submitted For: Ramiro Sendejo, DISTRICT ATTORNEY

Submitted By: Ramiro Sendejo, DISTRICT ATTORNEY

Department: DISTRICT ATTORNEY

Information

CAPTION

Victim Assistance Program (VAP) Grant (1281):
Approval to submit a VAP Grant #2924301 budget adjustment to the Office of the Governor (OOG).

BACKGROUND

Approval to reallocate funds with the VAP categorical budget.
This will allocate funds but will not increase or decrease the amount of the grant.
Approval to accept grant AI#51339 9/29/2015.

Fiscal Impact

CALENDAR YEAR: SEE BELOW **ACCT. #:** 7-1281-412-00-080-017-5-XXX

FUNDS AVAILABLE Y/N?: Y **MATCHING FUNDS Y/N?:**

BUDGETARY IMPACT:

Funds available as of 5/19/2017.

Grant Fiscal Year: 2015
County Calendar Year: 2017

Program Fund: VA-Victims of Crime Act Formula Grant Program - OOG

Attachments

Original Budget
Proposed Budget

Form Review

Inbox	Reviewed By	Date
Budget & Management	Veronica Ortiz	05/19/2017 03:18 PM
Final Approval	Monica Salinas	05/26/2017 02:58 PM
Form Started By: Ramiro Sendejo		Started On: 05/19/2017 02:41 PM
Final Approval Date: 05/26/2017		

Print This Page

Agency Name: Hidalgo County
Grant/App: 2924301 **Start Date:** 9/1/2015 **End Date:** 9/30/2017

Project Title: Hidalgo County DA's Office-Victim Assistance Program
Status: Active Grant

Budget Details Information
Budget Information by Budget Line Item:

CATEGORY	SUB CATEGORY	DESCRIPTION	OOG	CASH MATCH	IN-KIND MATCH	GPI	TOTAL	UNIT/%
Personnel	Advocate	Advocate I- prepares victims for interview; provides assessment of victim and family needs and makes appropriate referrals for on-site or off-site services including medical, mental health, crime victims assistance, VINE, etc.; may debrief victim after interview to assess immediate mental/emotional state; may provide immediate crisis intervention counseling or refer to mental health specialist as needed. Base Salary: $33,260 + Fringe Benefits $12,281.63 = $45,541.63. Fringe Benefits Breakdown= Health Insurance $5928, Life Insurance $37.56 ,FICA $2,544.39, Retirement $3,535.54, Unemployment $199.56 , Workers Comp $36.99= $12,281.63; POSITION START DATE: 11/30/15, EMPLOYEE'S INITIALS:B.F.	$70,400.00	$17,600.00	$0.00	$0.00	$88,000.00	100
Personnel	Advocate	Family Advocate 2 - prepares victims for interview; provides assessment. of victim and family needs and makes appropriate referrals for on-site and/or off-site services including medical, mental health, crime victims assistance, VINE, etc.; may debrief victim after interview to assess immediate mental/emotional state of	$68,800.00	$17,200.00	$0.00	$0.00	$86,000.00	100

		child (and family) and if child (or family) is assessed to be in emotional crisis may provide immediate crisis intervention counseling or refer to mental health specialist. . Base Salary: $33,260 + Fringe Benefits $12,281.63 = $45,541.63. Fringe Benfits Breakdown= Health Insurance $5928, Life Inusurance $37.56 ,FICA $2,544.39, Retirement $3,535.54, Unemployment $199.56 , Workers Comp $36.99= $12,281.63; POSITION START DATE: 12/14/15, EMPLOYEE'S INITIALS:A.Q.						
Personnel	Attorney	The attorney will dedicate 100% of the time overseeing the advocates and will provide guidance on legal procedures; will assist victims in securing rights and services from other agencies; will provide intervention with employers, creditors and others on behalf of the victim; and will provide other general information on rights and remedies available to the victim. Attorney will not be prosecuting cases. Base Salary $51,800 + Fringe Benefits $15,802.38= $67,602.38 Fringe Benefits Breakdown= Health Insurance $5,928, Life Insurance $37.56, FICA $3,962.70, Retirement $5,506.34, Unemployment $310.80, Workers Comp $ 56.98= $15,802.38; POSITION START DATE: 1/25/2016 END DATE 8/22/2016, EMPLOYEE'S INITIALS:A.G.	$36,030.29	$9,007.57	$0.00	$0.00	$45,037.86	100
Personnel	Attorney	The attorney will dedicate 100% of the time overseeing the advocates and will provide guidance on legal procedures; will assist victims in securing rights and services from other agencies; will provide intervention with	$5,765.38	$1,441.35	$0.00	$0.00	$7,206.73	100

		employers, creditors and others on behalf of the victim; and will provide other general information on rights and remedies available to the victim. Attorney will not be prosecuting cases. Base Salary $51,800 + Fringe Benefits $15,802.38= $67,602.38 Fringe Benefits Breakdown= Health Insurance $5,928, Life Insurance $37.56, FICA $3,962.70, Retirement $5,506.34, Unemployment $310.80, Workers Comp $ 56.98= $15,802.38; POSITION START DATE: 9/20/2016 END DATE 10/25/2016, EMPLOYEE'S INITIALS:J.D.						
Personnel	Attorney	The attorney will dedicate 100% of the time overseeing the advocates and will provide guidance on legal procedures; will assist victims in securing rights and services from other agencies; will provide intervention with employers, creditors and others on behalf of the victim; and will provide other general information on rights and remedies available to the victim. Attorney will not be prosecuting cases. Base Salary $51,800 + Fringe Benefits $15,802.38= $67,602.38 Fringe Benefits Breakdown= Health Insurance $5,928, Life Insurance $37.56, FICA $3,962.70, Retirement $5,506.34, Unemployment $310.80, Workers Comp $ 56.98= $15,802.38; POSITION START DATE: 1/9/2017 - PRESENT, EMPLOYEE'S INITIALS: D.G.	$44,838.37	$11,209.14	$0.00	$0.00	$56,047.51	100
Supplies and Direct Operating Expenses	Cellular, Fax, Pager, and/or Office Telephone	Three IP Phones(Office phones), plus licenses and support. These Office phones are to replace older phones that have become obsolete. Office phones will be assign and used by each	$960.00	$240.00	$0.00	$0.00	$1,200.00	0

		employee working under this grant; One for the attorney and one for each of the two advocate. Phones are needed to communicate with victims and law enforcement agencies on a daily basis, also will be used for other communications to help the victims. Cost of each phone system plus support cost $400.00						
Personnel	Clerk	Receptionist/Intake Clerk- will provide victims with information of their cases answer Victims Unit main lines, mail out victim notifications, prepare victim intake files, clerical duties, such as copies, faxes, provide safety plans and resource brochures to victims. Base Salary $11,423.17 + Fringe Benefits $5,169.93 = $16,593.10. Fringe Benefits Breakdown = Health Insurance $2,887.50; Life Insurance $17.22; FICA $873.87; Retirement $1,310.24; Unemployment $68.54; Workers Comp $12.57. POSITION START DATE: NEW HIRE, EMPLOYEE'S INITIALS: NEW HIRE	$13,274.48	$3,318.62	$0.00	$0.00	$16,593.10	100
Supplies and Direct Operating Expenses	Desktop System and Accessories ($5,000 or less per unit)	Three Computer Systems to replace computers that have become obsolete. Each computer system consist of the following items; One (1)Computer Tower, One (1)LED Monitor, One (1)Printer. Each Computer System will be assign to the employees working under this grant; One for the attorney and one for each of the two advocates. Computers are needed for documentation, storage and analysis of victims data. Each Computer Systems has a cost of $1,166.66.	$2,800.00	$700.00	$0.00	$0.00	$3,500.00	0
Supplies and Direct Operating Expenses	Desktop System and Accessories	One Computer System, which consist of the following: One LED Monitor, One Computer	$880.73	$220.18	$0.00	$0.00	$1,100.91	0

	($5,000 or less per unit)	Tower and One Printer. This Computer system will be placed at the receptionist desk which is located in our New Safe Room.						
Travel and Training	In-State Incidentals and/or Mileage	Mileage and Incidentals for two advocates and a attorney when required to travel to attend seminars/training for Crime Victims. BREAKDOWN OF ESTIMATED TRAVEL INCIDENTALS/MILEAGE AS FOLLOWS: $85.00 for mileage & parking for both Advocates; $165.00 for mileage & parking for Attorney; Total Estimated travel incidentals/mileage expenditures $250.00.	$881.38	$220.34	$0.00	$0.00	$1,101.72	0
Travel and Training	In-State Registration Fees, Training, and/or Travel	Travel to attend seminars/training for two advocates and a attorney for Crime Victims. Also travel to attend seminars in order to meet the required CLE hours for the attorney. BREAKDOWN OF ESTIMATED EXPENSES AS FOLLOWS: Registration for both Advocates, B.F. and A.Q. $650.00 ($325.00 each); Hotel stay for Three (3) nights for both Advocates $307.00; Registration for Attorney D.G. $350.00; Hotel stay for two (2) nights for Attorney $443.00; Total estimated travel expenditures $1,750.00	$2,286.48	$571.62	$0.00	$0.00	$2,858.10	0
Supplies and Direct Operating Expenses	Office Equipment and/or Furniture ($5,000 or less per unit)	One Endorse Three-Seat Lounge chair	$1,028.14	$257.04	$0.00	$0.00	$1,285.18	0
Supplies and Direct Operating Expenses	Office Equipment and/or Furniture ($5,000 or less per unit)	One Endorse Single Seat Lounge Chair	$928.31	$232.56	$0.00	$0.00	$1,160.87	0
Supplies and Direct Operating Expenses	Office Equipment and/or Furniture	One Ignition Two Seat Lounge chair	$460.67	$115.17	$0.00	$0.00	$575.84	0

	(Valued Under $1,000)							
Supplies and Direct Operating Expenses	Office Equipment and/or Furniture (Valued Under $1,000)	One Ignition Three-Seat Lounge chair	$579.00	$144.75	$0.00	$0.00	$723.75	0
Supplies and Direct Operating Expenses	Office Equipment and/or Furniture (Valued Under $1,000)	Four Olson Stacker Chairs ($313.13 each)	$1,002.02	$250.50	$0.00	$0.00	$1,252.52	0
Supplies and Direct Operating Expenses	Office Equipment and/or Furniture (Valued Under $1,000)	One Flock 36" Round Top Table	$148.30	$37.08	$0.00	$0.00	$185.38	0
Supplies and Direct Operating Expenses	Office Equipment and/or Furniture (Valued Under $1,000)	One X base for 36" Round Top Table	$218.61	$54.65	$0.00	$0.00	$273.26	0
Supplies and Direct Operating Expenses	Office Equipment and/or Furniture (Valued Under $1,000)	Twenty Ignition Single Seat Lounge Chairs at $217.52 each.	$3,480.32	$870.08	$0.00	$0.00	$4,350.40	0
Supplies and Direct Operating Expenses	Office Equipment and/or Furniture (Valued Under $1,000)	One Multisection Storage	$420.00	$105.00	$0.00	$0.00	$525.00	0
Supplies and Direct Operating Expenses	Office Equipment and/or Furniture (Valued Under $1,000)	One Youth Seating set 4 piece	$520.00	$130.00	$0.00	$0.00	$650.00	0
Supplies and Direct Operating Expenses	Office Equipment and/or Furniture	One Rect Table Resin 48".	$172.80	$43.20	$0.00	$0.00	$216.00	0

	(Valued Under $1,000)							
Supplies and Direct Operating Expenses	Office Equipment and/or Furniture (Valued Under $1,000)	One Canvas Book Display	$88.00	$22.00	$0.00	$0.00	$110.00	0
Supplies and Direct Operating Expenses	Office Equipment and/or Furniture (Valued Under $1,000)	One 3-in-1 art easel	$63.20	$15.80	$0.00	$0.00	$79.00	0
Supplies and Direct Operating Expenses	Office Equipment and/or Furniture (Valued Under $1,000)	One Bilingual Circletime Rug	$387.14	$96.78	$0.00	$0.00	$483.92	0
Supplies and Direct Operating Expenses	Office Supplies (e.g., paper, postage, calculator)	Office Supplies -- paper, postage, post it, pens, paper clips, calculator.	$4,366.41	$1,091.60	$0.00	$0.00	$5,458.01	0
Supplies and Direct Operating Expenses	Printer, Fax, and/or Scanner Equipment and Accessories ($5,000 or less per unit)	Three Document Scanners. Scanners are needed to scan documents victims fill out and photos of victims injuries. Scanning of these items facilitates storage, analysis and communications with local agencies. Each scanner will be assign to employees working under this grant; One for the attorney and One for each of the two advocates. Each scanner has a cost of $500.00	$1,200.00	$300.00	$0.00	$0.00	$1,500.00	0
Supplies and Direct Operating Expenses	Printer, Fax, and/or Scanner Equipment and Accessories ($5,000 or less per unit)	One Fax Machine to be used in the Crime Victims section.	$239.99	$60.00	$0.00	$0.00	$299.99	0
Supplies and Direct Operating Expenses	Printer, Fax, and/or Scanner Equipment and	Equipment use fees. Lease of copier @ $211.50 a month for the remaining seven months in current fiscal year.	$1,184.40	$296.10	$0.00	$0.00	$1,480.50	0

	Accessories ($5,000 or less per unit)							
Supplies and Direct Operating Expenses	Television / Video System and Accessories ($5,000 or less per unit)	One 55" Television and One 32" Television with mounting accessories; both to be placed in the Safe Room for Crime Victims waiting area.	$1,071.62	$267.90	$0.00	$0.00	$1,339.52	0

You are logged in as **User Name:** HidalgoCDA

Print This Page

Agency Name: Hidalgo County
Grant/App: 2924301 **Start Date:** 9/1/2015 **End Date:** 9/30/2017

Project Title: Hidalgo County DA's Office-Victim Assistance Program
Status: Pending Grantee Certification

new Budget

Budget Details Information
Budget Information by Budget Line Item:

CATEGORY	SUB CATEGORY	DESCRIPTION	OOG	CASH MATCH	IN-KIND MATCH	GPI	TOTAL	UNIT/%
Personnel	Advocate	Advocate I- prepares victims for interview; provides assessment of victim and family needs and makes appropriate referrals for on-site or off-site services including medical, mental health, crime victims assistance, VINE, etc.; may debrief victim after interview to assess immediate mental/emotional state; may provide immediate crisis intervention counseling or refer to mental health specialist as needed. Base Salary: $33,260 + Fringe Benefits $12,281.63 = $45,541.63. Fringe Benefits Breakdown= Health Insurance $5928, Life Insurance $37.56 ,FICA $2,544.39, Retirement $3,535.54, Unemployment $199.56 , Workers Comp $36.99= $12,281.63; POSITION START DATE: 11/30/15, EMPLOYEE'S INITIALS:B.F.	$70,400.00	$17,600.00	$0.00	$0.00	$88,000.00	100
Personnel	Advocate	Family Advocate 2 - prepares victims for interview; provides assessment. of victim and family needs and makes appropriate referrals for on-site and/or off-site services including medical, mental health, crime victims assistance, VINE, etc.; may debrief victim after interview to assess immediate mental/emotional state of	$68,800.00	$17,200.00	$0.00	$0.00	$86,000.00	100

		child (and family) and if child (or family) is assessed to be in emotional crisis may provide immediate crisis intervention counseling or refer to mental health specialist. . Base Salary: $33,260 + Fringe Benefits $12,281.63 = $45,541.63. Fringe Benfits Breakdown= Health Insurance $5928, Life Inusurance $37.56 ,FICA $2,544.39, Retirement $3,535.54, Unemployment $199.56 , Workers Comp $36.99= $12,281.63; POSITION START DATE: 12/14/15, EMPLOYEE'S INITIALS:A.Q.						
Personnel	Attorney	The attorney will dedicate 100% of the time overseeing the advocates and will provide guidance on legal procedures; will assist victims in securing rights and services from other agencies; will provide intervention with employers, creditors and others on behalf of the victim; and will provide other general information on rights and remedies available to the victim. Attorney will not be prosecuting cases. Base Salary $51,800 + Fringe Benefits $15,802.38= $67,602.38 Fringe Benefits Breakdown= Health Insurance $5,928, Life Insurance $37.56, FICA $3,962.70, Retirement $5,506.34, Unemployment $310.80, Workers Comp $ 56.98= $15,802.38; POSITION START DATE: 1/25/2016 END DATE 8/22/2016, EMPLOYEE'S INITIALS:A.G.	$36,030.29	$9,007.57	$0.00	$0.00	$45,037.86	100
Personnel	Attorney	The attorney will dedicate 100% of the time overseeing the advocates and will provide guidance on legal procedures; will assist victims in securing rights and services from other agencies; will provide intervention with	$5,765.38	$1,441.35	$0.00	$0.00	$7,206.73	100

		employers, creditors and others on behalf of the victim; and will provide other general information on rights and remedies available to the victim. Attorney will not be prosecuting cases. Base Salary $51,800 + Fringe Benefits $15,802.38= $67,602.38 Fringe Benefits Breakdown= Health Insurance $5,928, Life Insurance $37.56, FICA $3,962.70, Retirement $5,506.34, Unemployment $310.80, Workers Comp $ 56.98= $15,802.38; POSITION START DATE: 9/20/2016 END DATE 10/25/2016, EMPLOYEE'S INITIALS:J.D.						
Personnel	Attorney	The attorney will dedicate 100% of the time overseeing the advocates and will provide guidance on legal procedures; will assist victims in securing rights and services from other agencies; will provide intervention with employers, creditors and others on behalf of the victim; and will provide other general information on rights and remedies available to the victim. Attorney will not be prosecuting cases. Base Salary $51,800 + Fringe Benefits $15,802.38= $67,602.38 Fringe Benefits Breakdown= Health Insurance $5,928, Life Insurance $37.56, FICA $3,962.70, Retirement $5,506.34, Unemployment $310.80, Workers Comp $ 56.98= $15,802.38; POSITION START DATE: 1/9/2017 - PRESENT, EMPLOYEE'S INITIALS: D.G.	$44,838.37	$11,209.14	$0.00	$0.00	$56,047.51	100
Supplies and Direct Operating Expenses	Cellular, Fax, Pager, and/or Office Telephone	Three IP Phones(Office phones), plus licenses and support. These Office phones are to replace older phones that have become obsolete. Office phones will be assign and used by each	$960.00	$240.00	$0.00	$0.00	$1,200.00	0

		employee working under this grant; One for the attorney and one for each of the two advocate. Phones are needed to communicate with victims and law enforcement agencies on a daily basis, also will be used for other communications to help the victims. Cost of each phone system plus support cost $400.00						
Personnel	Clerk	Receptionist/Intake Clerk- will provide victims with information of their cases answer Victims Unit main lines, mail out victim notifications, prepare victim intake files, clerical duties, such as copies, faxes, provide safety plans and resource brochures to victims. Base Salary $11,423.17 + Fringe Benefits $5,169.93 = $16,593.10. Fringe Benefits Breakdown = Health Insurance $2,887.50; Life Insurance $17.22; FICA $873.87; Retirement $1,310.24; Unemployment $68.54; Workers Comp $12.57. POSITION START DATE: NEW HIRE, EMPLOYEE'S INITIALS: NEW HIRE	$13,274.48	$3,318.62	$0.00	$0.00	$16,593.10	100
Supplies and Direct Operating Expenses	Desktop System and Accessories ($5,000 or less per unit)	Three Computer Systems to replace computers that have become obsolete. Each computer system consist of the following items; One (1)Computer Tower, One (1)LED Monitor, One (1)Printer. Each Computer System will be assign to the employees working under this grant; One for the attorney and one for each of the two advocates. Computers are needed for documentation, storage and analysis of victims data. Each Computer Systems has a cost of $1,166.66.	$2,800.00	$700.00	$0.00	$0.00	$3,500.00	0
Supplies and Direct Operating Expenses	Desktop System and Accessories	One Computer System, which consist of the following: One LED Monitor, One Computer	$880.73	$220.18	$0.00	$0.00	$1,100.91	0

	($5,000 or less per unit)	Tower and One Printer. This Computer system will be placed at the receptionist desk which is located in our New Safe Room.						
Travel and Training	In-State Incidentals and/or Mileage	Mileage and Incidentals for two advocates and a attorney when required to travel to attend seminars/training for Crime Victims. BREAKDOWN OF ESTIMATED TRAVEL INCIDENTALS/MILEAGE AS FOLLOWS: $85.00 for mileage & parking for both Advocates; $165.00 for mileage & parking for Attorney; Total Estimated travel incidentals/mileage expenditures $250.00.	$881.38	$220.34	$0.00	$0.00	$1,101.72	0
Travel and Training	In-State Registration Fees, Training, and/or Travel	Travel to attend seminars/training for two advocates and a attorney for Crime Victims. Also travel to attend seminars in order to meet the required CLE hours for the attorney. BREAKDOWN OF ESTIMATED EXPENSES AS FOLLOWS: Registration for both Advocates, B.F. and A.Q. $650.00 ($325.00 each); Hotel stay for Three (3) nights for both Advocates $307.00; Registration for Attorney D.G. $350.00; Hotel stay for two (2) nights for Attorney $443.00; Total estimated travel expenditures $1,750.00	$2,286.48	$571.62	$0.00	$0.00	$2,858.10	0
Supplies and Direct Operating Expenses	Internet Access Services	DATA CARD FOR LAPTOP	$160.00	$40.00	$0.00	$0.00	$200.00	0
Supplies and Direct Operating Expenses	Laptop System and Accessories ($5,000 or less per unit)	LAPTOP	$720.00	$180.00	$0.00	$0.00	$900.00	0
Supplies and Direct Operating Expenses	Office Equipment and/or Furniture ($5,000 or less per unit)	One Endorse Three-Seat Lounge chair	$1,028.14	$257.04	$0.00	$0.00	$1,285.18	0

Supplies and Direct Operating Expenses	Office Equipment and/or Furniture ($5,000 or less per unit)	One Endorse Single Seat Lounge Chair	$928.31	$232.56	$0.00	$0.00	$1,160.87	0
Supplies and Direct Operating Expenses	Office Equipment and/or Furniture (Valued Under $1,000)	One Ignition Two Seat Lounge chair	$460.67	$115.17	$0.00	$0.00	$575.84	0
Supplies and Direct Operating Expenses	Office Equipment and/or Furniture (Valued Under $1,000)	One Ignition Three-Seat Lounge chair	$579.00	$144.75	$0.00	$0.00	$723.75	0
Supplies and Direct Operating Expenses	Office Equipment and/or Furniture (Valued Under $1,000)	Four Olson Stacker Chairs ($313.13 each)	$1,002.02	$250.50	$0.00	$0.00	$1,252.52	0
Supplies and Direct Operating Expenses	Office Equipment and/or Furniture (Valued Under $1,000)	One Flock 36" Round Top Table	$148.30	$37.08	$0.00	$0.00	$185.38	0
Supplies and Direct Operating Expenses	Office Equipment and/or Furniture (Valued Under $1,000)	One X base for 36" Round Top Table	$218.61	$54.65	$0.00	$0.00	$273.26	0
Supplies and Direct Operating Expenses	Office Equipment and/or Furniture (Valued Under $1,000)	Twenty Ignition Single Seat Lounge Chairs at $217.52 each.	$3,480.32	$870.08	$0.00	$0.00	$4,350.40	0
Supplies and Direct Operating Expenses	Office Equipment and/or Furniture (Valued Under $1,000)	One Multisection Storage	$420.00	$105.00	$0.00	$0.00	$525.00	0
Supplies and	Office	One Youth Seating set 4	$520.00	$130.00	$0.00	$0.00	$650.00	0

Direct Operating Expenses	Equipment and/or Furniture (Valued Under $1,000)	piece						
Supplies and Direct Operating Expenses	Office Equipment and/or Furniture (Valued Under $1,000)	One Rect Table Resin 48".	$172.80	$43.20	$0.00	$0.00	$216.00	0
Supplies and Direct Operating Expenses	Office Equipment and/or Furniture (Valued Under $1,000)	One Canvas Book Display	$88.00	$22.00	$0.00	$0.00	$110.00	0
Supplies and Direct Operating Expenses	Office Equipment and/or Furniture (Valued Under $1,000)	One 3-in-1 art easel	$63.20	$15.80	$0.00	$0.00	$79.00	0
Supplies and Direct Operating Expenses	Office Equipment and/or Furniture (Valued Under $1,000)	One Bilingual Circletime Rug	$387.14	$96.78	$0.00	$0.00	$483.92	0
Supplies and Direct Operating Expenses	Office Supplies (e.g., paper, postage, calculator)	Office Supplies -- paper, postage, post it, pens, paper clips, calculator.	$2,926.41	$731.60	$0.00	$0.00	$3,658.01	0
Supplies and Direct Operating Expenses	Overhead / Multimedia Projector and Accessories ($5,000 or less per unit)	PROJECTOR	$560.00	$140.00	$0.00	$0.00	$700.00	0
Supplies and Direct Operating Expenses	Printer, Fax, and/or Scanner Equipment and Accessories ($5,000 or less per unit)	Three Document Scanners. Scanners are needed to scan documents victims fill out and photos of victims injuries. Scanning of these items facilitates storage, analysis and communications with local agencies. Each scanner will be assign to employees working under this grant; One for the attorney and	$1,200.00	$300.00	$0.00	$0.00	$1,500.00	0

		One for each of the two advocates. Each scanner has a cost of $500.00						
Supplies and Direct Operating Expenses	Printer, Fax, and/or Scanner Equipment and Accessories ($5,000 or less per unit)	One Fax Machine to be used in the Crime Victims section.	$239.99	$60.00	$0.00	$0.00	$299.99	0
Supplies and Direct Operating Expenses	Printer, Fax, and/or Scanner Equipment and Accessories ($5,000 or less per unit)	Equipment use fees. Lease of copier @ $211.50 a month for the remaining seven months in current fiscal year.	$1,184.40	$296.10	$0.00	$0.00	$1,480.50	0
Supplies and Direct Operating Expenses	Television / Video System and Accessories ($5,000 or less per unit)	One 55" Television and One 32" Television with mounting accessories; both to be placed in the Safe Room for Crime Victims waiting area.	$1,071.62	$267.90	$0.00	$0.00	$1,339.52	0

AI-59793 **District Attorney** **7. B.**

CC - REGULAR

Meeting Date: 05/30/2017

Submitted For: Rosie Cantu, DISTRICT ATTORNEY

Submitted By: Sylvia Solis, DISTRICT ATTORNEY

Department: DISTRICT ATTORNEY

Information

CAPTION

DA Vehicle Theft (1221):
Approval of 2017 appropriation of funds in the amount of $31.92.

BACKGROUND

Fiscal Impact

CALENDAR YEAR: 2017 **ACCT. #:** 7-1221-412-00-080-005-0-610

FUNDS AVAILABLE Y/N?: Y **MATCHING FUNDS Y/N?:** N

BUDGETARY IMPACT:

Funds available as of 05-10-17 in DA Vehicle Theft-Unassigned Fund Balance (7-1221-258-00-000-000-0-000).

Attachments

Appropriation

Form Review

Inbox	Reviewed By	Date
Budget & Management	Veronica Ortiz	05/10/2017 04:02 PM
Final Approval	Monica Salinas	05/26/2017 02:58 PM
Form Started By: Sylvia Solis		Started On: 05/10/2017 03:39 PM
Final Approval Date: 05/26/2017		

DATE: May 10, 2017

2017
Appropriation

DEPARTMENT HEAD: Ricardo Rodriguez, Jr., District Attorney

DEPARTMENT NAME: District Attorney's Office - DA VEH THEFT

ACCOUNT NUMBER: 7-1221-412-00-080-005-0-XXX

Contact Person: Sylvia Solis **Ph#:** (956) 292-7600

SUBJECT: **Budget Amendments** (increase (decrease)) in accordance with Local Government Code, Chapter 111, § 111.070, Item C (2).

Honorable Commissioners' Court of Hidalgo County:

I would like to request the following Budget Amendments (increase (decrease)) in accordance with Local Government Code, Chapter 111, § 111.070, Item C (2).

INCREASE ACCOUNT NUMBER(S)	ACCOUNT (OBJECT) NAME	AMOUNT
7-1221-412-00-080-005-0-610	DA VEH THEFT - GENERAL SUPPLIES	$31.92
	TOTAL BUDGET INCREASE (DECREASE)	**$31.92**

REASON: Appropriation of funds to cover General Supplies expenditures.

DEPARTMENT HEAD SIGNATURE

APPROVED COMMISSIONERS' COURT

/ /
DATE

ATTEST COUNTY CLERK

AI-60008 **Constables** **8. A.**

CC - REGULAR

Meeting Date: 05/30/2017

Submitted For: Larry Gallardo, CONSTABLE PCT. #3

Submitted By: Raquel Ramos, CONSTABLE PCT. #3

Department: CONSTABLE PCT. #3

Information

CAPTION

Constable Pct. 3 (1230)
Approval of 2017 appropriation of Chapter 59 funds received by Hidalgo County District Attorney's Office HIDTA Task Force in the amount of $23,255.00.

BACKGROUND

Approved through Commissioner's Court on April 18, 2017.

Fiscal Impact

CALENDAR YEAR: 2017 **ACCT. #:** 7-1230-421-00-293-010-0-XXX

FUNDS AVAILABLE Y/N?: Y **MATCHING FUNDS Y/N?:** N

BUDGETARY IMPACT:

Attachments

Ch.59-Appropriation

Form Review

Inbox	Reviewed By	Date
Budget & Management	Veronica Ortiz	05/25/2017 03:00 PM
Final Approval	Monica Salinas	05/26/2017 02:58 PM
Form Started By: Raquel Ramos		Started On: 05/25/2017 11:29 AM
Final Approval Date: 05/26/2017		

DATE: May 26, 2017

2017
Appropriation

DEPARTMENT HEAD: Lazaro Gallardo. Jr.

DEPARTMENT NAME: Hidalgo County Constable Precinct 3

ACCOUNT NUMBER: 7-1230-421-00-293-010-0-XXX

Contact Person: Raquel Ramos Ph#: 956-205-7031

SUBJECT: **Budget Amendments** (increase (decrease)) in accordance with Local Government Code, Chapter 111, § 111.070, Item C (2).

Honorable Commissioners' Court of Hidalgo County:

I would like to request the following Budget Amendments (increase (decrease)) in accordance with Local Government Code, Chapter 111, § 111.070, Item C (2).

INCREASE ACCOUNT NUMBER(S)	ACCOUNT (OBJECT) NAME		AMOUNT
7-1230-421-00-293-010-0-752	CONST. PCT. 3 CCP59	VEHICLES	23,255.00
		TOTAL BUDGET INCREASE (DECREASE)	**23,255.00**

REASON: TO APPROPRIATE THE MONIES RECEIVED BY HIDALGO COUNTY D.A.'S OFFICE THROUGH INTERLOCAL

DEPARTMENT HEAD SIGNATURE

APPROVED COMMISSIONERS' COURT

____/____/____
DATE

ATTEST COUNTY CLERK

AI-60018 **Constables** **8. B.**

CC - REGULAR

Meeting Date: 05/30/2017

Submitted For: Larry Gallardo, CONSTABLE PCT. #3

Submitted By: Raquel Ramos, CONSTABLE PCT. #3

Department: CONSTABLE PCT. #3

Information

CAPTION

Constable Pct. 3 (1257)

Approval of 2017 appropriation of US Treasury funds received by Hidalgo County District Attoney's Office HIDTA Task Force in the the amount of $10,000.00

BACKGROUND

Approved through Commissioner's Court on April 18, 2017.

Fiscal Impact

CALENDAR YEAR: 2017 **ACCT. #:** 7-1257-421-00-293-016-0-752

FUNDS AVAILABLE Y/N?: Y **MATCHING FUNDS Y/N?:**

BUDGETARY IMPACT:

appropriation of funds; funds available in the unassigned f/b as of 5-25-17.

Attachments

US Treasury Appropriation

Form Review

Inbox	Reviewed By	Date
Budget & Management	Veronica Ortiz	05/25/2017 03:02 PM
Ivan Cantu	Ivan Cantu	05/25/2017 04:13 PM
Final Approval	Monica Salinas	05/26/2017 02:58 PM
Form Started By: Raquel Ramos		Started On: 05/25/2017 02:55 PM
Final Approval Date: 05/26/2017		

DATE: May 25, 2017

DEPARTMENT HEAD: Lazaro Gallardo. Jr.

DEPARTMENT NAME: Hidalgo County Constable Precinct 3

ACCOUNT NUMBER: 7-1251-421-00-293-016-0-XXX

Contact Person: Raquel Ramos Ph#: 956-205-7031

2017
Appropriation

SUBJECT: **Budget Amendments** (increase (decrease)) in accordance with Local Government Code, Chapter 111, § 111.070, Item C (2).

Honorable Commissioners' Court of Hidalgo County:

I would like to request the following Budget Amendments (increase (decrease)) in accordance with Local Government Code, Chapter 111, § 111.070, Item C (2).

INCREASE ACCOUNT NUMBER(S)	ACCOUNT (OBJECT) NAME		AMOUNT
7-1257-421-00-293-016-0-752	CONST. PCT. 3 US TRES	VEHICLES	10,000.00
		TOTAL BUDGET INCREASE (DECREASE)	**10,000.00**

REASON: TO APPROPRIATE THE MONIES RECEIVED BY HIDALGO COUNTY D.A.'S OFFICE THROUGH INTERLOCAL

DEPARTMENT HEAD SIGNATURE

APPROVED COMMISSIONERS' COURT

____/____/____
DATE

ATTEST COUNTY CLERK

AI-59924 **Constables** **8. C.**

CC - REGULAR

Meeting Date: 05/30/2017

Submitted By: Monica Salinas, EXECUTIVE OFFICE

Department: EXECUTIVE OFFICE

Information

CAPTION

Constable Pct. #3:
Discussion, consideration and action on Interlocal Cooperation Agreement between County of Hidalgo, Texas and Hidalgo County Irrigation District #6

BACKGROUND

Fiscal Impact

Attachments

legal approval
revised

Form Review

Inbox	Reviewed By	Date
Budget & Management	Veronica Ortiz	05/19/2017 01:09 PM
Final Approval	Monica Salinas	05/26/2017 02:58 PM
Form Started By: Monica Salinas		Started On: 05/19/2017 12:21 PM
Final Approval Date: 05/26/2017		

Zimbra **monica.badillo@co.hidalgo.tx.us**

Fwd: Interlocal Agreement Irrigation District #6

From : Valde Guerra <valde.guerra@co.hidalgo.tx.us> Thu, May 18, 2017 12:19 PM
Subject : Fwd: Interlocal Agreement Irrigation District #6 1 attachment
To : monica badillo <monica.badillo@co.hidalgo.tx.us>

Ms. Badillo,

For next commissioners court session...30th on behalf of Constable Pct. #3.

Respectfully,

Valde Guerra
CEO

From: "Josephine Ramirez" <josephine.ramirez@da.co.hidalgo.tx.us>
To: "valde guerra" <valde.guerra@co.hidalgo.tx.us>
Sent: Thursday, May 18, 2017 11:38:32 AM
Subject: Fwd: Interlocal Agreement Irrigation District #6

Josephine Ramirez Solis

Assistant Criminal District Attorney

Chief - Civil Division

Office of Criminal District Attorney

Hidalgo County, Texas

100 E. Cano

Edinburg, TX 78539

(956) 292-7609 ext. 8186

(956) 318-2079 FAX

josephine.ramirez@da.co.hidalgo.tx.us

****

The information contained in this e-mail may be 1.SUBJECT TO THE ATTORNEY-CLIENT PRIVILEGE; 2.ATTORNEY WORK PRODUCT; and/or 3.CONFIDENTIAL. It is intended only for the individual or entity designated above. Any distribution, copying, or use of or reliance upon the information contained in this e-mail by or to anyone other than the recipient designated above by the sender is unauthorized and strictly prohibited. **IF YOU HAVE RECEIVED THIS COMMUNICATION IN ERROR, PLEASE ADVISE THE SENDER BY REPLY E-MAIL TO josephine.ramirez@da.co.hidalgo.tx.us AND DELETE THE COMMUNICATION.**

****

---------- Forwarded message ----------
From: **Josephine Ramirez** <josephine.ramirez@da.co.hidalgo.tx.us>
Date: Mon, May 15, 2017 at 9:13 AM
Subject: Re: Interlocal Agreement Irrigation District #6
To: Larry Gallardo <larry.gallardo@co.hidalgo.tx.us>

Constable,

Based on our conversation Friday, I made a few more revisions to the agreement. See attached. Please let me know if you need anything else.

Thank you.

Josephine Ramirez Solis

Assistant Criminal District Attorney

Chief - Civil Division

Office of Criminal District Attorney

Hidalgo County, Texas

100 E. Cano

Edinburg, TX 78539

(956) 292-7609 ext. 8186

(956) 318-2079 FAX

josephine.ramirez@da.co.hidalgo.tx.us

****

The information contained in this e-mail may be 1.SUBJECT TO THE ATTORNEY-CLIENT PRIVILEGE; 2.ATTORNEY WORK PRODUCT; and/or 3.CONFIDENTIAL. It is intended only for the individual or entity designated above. Any distribution, copying, or use of or reliance upon the information contained in this e-mail by

or to anyone other than the recipient designated above by the sender is unauthorized and strictly prohibited. **IF YOU HAVE RECEIVED THIS COMMUNICATION IN ERROR, PLEASE ADVISE THE SENDER BY REPLY E-MAIL TO josephine.ramirez@da.co.hidalgo.tx.us AND DELETE THE COMMUNICATION.**

****

On Wed, May 3, 2017 at 4:30 PM, Josephine Ramirez <josephine.ramirez@da.co.hidalgo.tx.us> wrote:

> Constable,
>
> Attached is a draft version of a proposed agreement with the District. I left a couple of things highlighted: 1) identification of specific locations, if any; and 2) who to send billing invoices to if that's the way budget wants it handled. (We need their input).
>
> Let me know if you need anything else or have any revisions, inclusions, etc.

Josephine Ramirez Solis

Assistant Criminal District Attorney

Chief - Civil Division

Office of Criminal District Attorney

Hidalgo County, Texas

100 E. Cano

Edinburg, TX 78539

(956) 292-7609 ext. 8186

(956) 318-2079 FAX

josephine.ramirez@da.co.hidalgo.tx.us

****

The information contained in this e-mail may be 1.SUBJECT TO THE ATTORNEY-CLIENT PRIVILEGE; 2.ATTORNEY WORK PRODUCT; and/or 3.CONFIDENTIAL. It is intended only for the individual or entity designated above. Any distribution, copying, or use of or reliance upon the information contained in this e-mail by or to anyone other than the recipient designated above by the sender is unauthorized and strictly prohibited. **IF YOU HAVE RECEIVED THIS COMMUNICATION IN ERROR, PLEASE ADVISE THE SENDER BY REPLY E-MAIL TO josephine.ramirez@da.co.hidalgo.tx.us AND DELETE THE COMMUNICATION.**

****

On Thu, Apr 27, 2017 at 1:20 PM, Larry Gallardo <larry.gallardo@co.hidalgo.tx.us> wrote:

No attachment

Larry Gallardo
Hidalgo County Constable Precinct 3
730 North Breyfogle Suite B
Mission, Texas 78574
Phone (956) 205-7031 or 7032
Fax (956) 519-4245

This e-mail is covered by the Electronic Communications Privacy Act, 18 U.S.C. Sections 2510-2521 and is legally privileged. The information contained in this e-mail is intended only for use of the individual or entity named above. If the reader of this message is not the intended recipient, or the employee or agent responsible for delivering it to the intended recipient, you are hereby notified that any dissemination, distribution or copying of this communication is strictly prohibited. If you have received this communication in error, please immediately notify us by e-mail, and destroy the original message.

From: "Josephine Ramirez" <josephine.ramirez@da.co.hidalgo.tx.us>
To: "Larry Gallardo" <larry.gallardo@co.hidalgo.tx.us>
Sent: Thursday, April 27, 2017 11:33:32 AM
Subject: Interlocal Agreement Irrigation District #6

Constable,

I have a draft agreement worked up. Let me know how you want to proceed.

Thanks

Josephine Ramirez Solis

Assistant Criminal District Attorney

Chief - Civil Division

Office of Criminal District Attorney

Hidalgo County, Texas

100 E. Cano

Edinburg, TX 78539

(956) 292-7609 ext. 8186

(956) 318-2079 FAX

[redacted] FAX
josephine.ramirez@da.co.hidalgo.tx.us

****

The information contained in this e-mail may be 1.SUBJECT TO THE ATTORNEY-CLIENT PRIVILEGE; 2.ATTORNEY WORK PRODUCT; and/or 3.CONFIDENTIAL. It is intended only for the individual or entity designated above. Any distribution, copying, or use of or reliance upon the information contained in this e-mail by or to anyone other than the recipient designated above by the sender is unauthorized and strictly prohibited. **IF YOU HAVE RECEIVED THIS COMMUNICATION IN ERROR, PLEASE ADVISE THE SENDER BY REPLY E-MAIL TO josephine.ramirez@da.co.hidalgo.tx.us AND DELETE THE COMMUNICATION.**

****

REVISED-Interlocal Agreement_Security Guard_Pct 3 Hid Co.pdf
164 KB

INTERLOCAL COOPERATION AGREEMENT
BETWEEN THE COUNTY OF HIDALGO, TEXAS
AND HIDALGO COUNTY IRRIGATION DISTRICT #6

This Agreement is made and entered into pursuant to the Interlocal Cooperation Act, Chapter 791 of the Texas Government Code, regarding law enforcement services provided through the cooperation of municipalities, counties, and other local governments between the **County of Hidalgo, Texas acting by and through the Office of Constable, Precinct #3**, (hereinafter referred to as the participating law enforcement agency) and the **Hidalgo County Irrigation District #6**, (hereinafter referred to as the District), a political subdivision of the state of Texas organized under Article XVI, Section 59 of the Texas Constitution and operating under the provisions of the Texas Water Code, Chapters 49 and 58; collectively, the governmental units are referred to as the "Parties" herein.

I.
Law Enforcement Agency Obligations

1. With the aim of increasing the safety and security for District and its resources, as well as for the citizens of Hidalgo County, Office of Constable, Precinct 3 will provide one (1) commissioned peace officer(s) to provide safety and security services (hereinafter referred to as "Services") to locations in and around District.

2. Services will be provided Monday-Friday, 8:00 a.m. to 5:00 p.m. or in lieu thereof at such other times agreed by District and the participating law enforcement agency.

3. The peace officer assigned by the participating law enforcement agency shall be empowered to enforce the laws of the State of Texas.

4. During the term of this Agreement, such peace officer at all times, shall remain and be treated as an employee of the County of Hidalgo and shall be subject to all applicable personnel policies, rules and procedures of the County of Hidalgo and the participating law enforcement agency.

5. In addition to the duties identified above, the participating law enforcement agency agrees that such peace officer assigned to the District shall use his/her best efforts to respond to emergencies or other exigent circumstances which may exist at the District during regular or agreed upon hours in which the response of a peace officer would be appropriate or in which the jurisdiction of the primary local law enforcement agency would be applicable. However, the peace officer shall use his/her sole judgment and/or discretion to determine whether the situation merits an emergency or exigent circumstance requiring response by such officer. Should the peace officer decide to exercise the above referenced discretion, it will not be considered a violation of this agreement.

6. District and the participating law enforcement agency agree that the peace officer will not be required to perform any District administrative duties, other than those identified herein.

7. The participating law enforcement agency agrees to notify the administrative office of the District when the peace officer takes sick leave or has scheduled vacation, overtime or compensatory time off in accordance with County notice provisions. The participating law enforcement agency will provide a suitable replacement officer in any event that a normally assigned officer is unavailable by virtue of the use of the leave specified above. In the event that an officer is unexpectedly unavailable, the participating law enforcement agency shall provide a suitable replacement officer as soon as feasible.

8. The participating law enforcement agency may, but is not required to, consult with District prior to making any staffing changes in connection with this Agreement but the recruiting, hiring and retention of Hidalgo County personnel shall remain the sole prerogative of the participating law enforcement agency. However, should District believe that the peace officer is not fulfilling his/her job duties or meeting District's expected performance standards under this Agreement, District shall notify the participating law enforcement agency with specific information regarding such nonperformance. The participating law enforcement agency shall correct the unsatisfactory performance or provide a suitable replacement officer by the next scheduled service day or as soon as feasible after receipt of notification by District.

II.
District's Obligations

Payment. The total amount of this Agreement shall not exceed $50,000.00 per year for services performed under this agreement.

Billing. District agrees to pay participating law enforcement agency on a monthly basis after receipt of an invoice. Such invoices shall be submitted by County to District for each month of service, with payment made ten (10) days following receipt of invoice in the Fiscal Department. Payment will be made only based on an approved statement of services rendered by participating law enforcement agency.

III.
Miscellaneous

Term. This agreement shall be effective on May 30, 2017, and will expire on May 30, 2018, unless otherwise terminated. This agreement may automatically renew for one year terms (up to 3 years) by agreement of the parties.

Termination of Agreement. This agreement shall remain in effect until terminated by either party with a thirty (30) day written notice prior to any cancellation. Such written notice shall be mailed to the address designated under **Notice.**

Following written notification of intent to terminate and until the agreed upon date of termination, participating law enforcement agency will continue to have the responsibility to provide services under this agreement and District will continue to have the responsibility to pay for the services in the manner specified in this agreement.

District and participating law enforcement agency may mutually agree to termination of this agreement at any time.

Amendments. This agreement may only be amended by written agreement between participating law enforcement agency and District.

Entire Agreement. This agreement constitutes the entire agreement of the parties and supersedes any prior understanding or oral or written agreements between District and participating law enforcement agency on the matters contained herein.

Contractor Relations. All participating law enforcement agency questions, issues, and comments regarding the management of this Agreement shall be directed to:

Hidalgo County Constable Precinct No. 3
Attention: Constable Larry Gallardo
730 N. Breyfogle #B
Mission, TX 78572
956-581-6800

Hidalgo County Irrigation District #6
Attention: Joe Aguilar, District Manager
P.O. Box 786
Mission, TX 78572
956-585-8389

Notice. Except as expressly provided herein, any notice required or permitted to be given under this agreement must be in writing and delivered in person or by registered or certified mail, return receipt requested, postage prepaid, to the individual and address shown below:

Ramon Garcia
Hidalgo County Judge
Hidalgo County Courthouse Annex
100 E. Cano, 1st floor
Edinburg, Texas 78539

Hidalgo County Irrigation District #6
P.O. Box 786
Mission, Texas 78572
Attn: Joe Aguilar

Copy to:
Hidalgo County Constable Precinct No.3
Attention: Constable Lazaro "Larry" Gallardo
730 N. Breyfogle #B
Mission, Texas 78572

Governing Law. This agreement is being executed, delivered and shall be performed in the State of Texas; the laws of Texas shall govern its validity, construction, enforcement and interpretation. Proper venue for any litigation arising from this contract shall be in Hidalgo County, Texas.

Each party agrees to conform to its own applicable purchasing laws, regulations, policies and procedures with respect to the portion of the services under this Agreement performed by each party.

Conflict of Applicable Law. Nothing in this Agreement shall be construed so as to require the commission of any act contrary to law, and whenever there is any conflict between and provision

of their Agreement and any present or future law, ordinance, or administrative, executive or judicial regulation, order or decree, or amendment thereof, contrary to which the parties have no legal right to contract, the latter shall prevail, but in such event the affected provision or provisions of this Agreement shall be modified only to the extent necessary to bring them within the legal requirements and only during the time such conflict exists.

No Waiver. No waiver by any party hereto of any breach of any provision of the Agreement shall be deemed to be a waiver of any preceding or succeeding breach of the same or any other provision hereof.

Additional Documents. The parties hereto covenant and agree that they will execute such other and further instruments and documents as are or may become necessary or convenient to effectuate and carry out the terms of this Agreement.

Successors. This Agreement shall be binding upon and inure to the benefit of the parties hereto and their respective heirs, executors, administrators, legal representatives, successors, and assigns where permitted by this Agreement.

Assignment. This Agreement shall not be assignable.

Headings. The headings and captions contained in this Agreement are solely for convenience reference and shall not be deemed to affect the meaning or interpretation of any provision or paragraph hereof.

Gender and Number. All pronouns used in this Agreement shall include the other gender, whether used in the masculine, feminine or neuter gender, and singular shall include the plural whenever and so often as may be appropriate.

Authority to Execute. The execution and performance of this Agreement by the Parties has been duly authorized by all necessary laws, resolutions or corporate action, and this Agreement constitutes the valid and enforceable obligations of the participating law enforcement agency and District in accordance with its terms.

Governmental Purpose. Each party hereto is entering into this Agreement for the purpose of providing for governmental services or functions and will pay for such services out of current revenues available to the paying party as herein provided.

Immunities. This Agreement is not intended to extend the liability of the Parties beyond that provided by law. Neither Party waives, nor shall be deemed to have hereby waived, any immunity or defense that would otherwise be available to it against claims arising from third parties.

Indemnification: Without waiving its sovereign immunity, and if and to the extent allowed by law, each party shall indemnify and hold harmless each other, its officers, officials, and employees from and against all claims and liabilities of any nature or kind, including costs and expenses for or on account of any claims, damages, losses, or expenses of any character

whatsoever resulting in whole or in part from the negligent performance or omission of either party's employees or representatives connected with the activities described herein.

Commitment of Current Revenues Only. In the event that during any term hereof, the governing body of any party does not appropriate sufficient funds to meet the obligations of such party under the Agreement, then any party may terminate this Agreement upon ninety (90) days written notice to the other party. Each of the parties hereto agrees, however, to use its best efforts to secure funds necessary for the continued performance of this Agreement. The Parties intend this provision to be a continuing right to terminate this Agreement at the expiration of each budget period of each party hereto.

Nondiscrimination. The parties agree that services and/or project proposals mutually agreed to shall be conducted in a manner that does not discriminate against any person on a basis prohibited by applicable County or District policy, State or Federal law, including without limitation, race, color, national origin, religion, sex, age, veteran, status, or disability.

This agreement shall become effective upon the execution by all parties as noted below.

County of Hidalgo, Texas

_____
Ramon Garcia
Hidalgo County Judge
Date: _____

_____
Constable Lazaro "Larry" Gallardo
Hidalgo County Constable Precinct No. 3
Date: _____

ATTEST:

_____
Arturo Guajardo, Jr., County Clerk
Date: _____

APPROVED AS TO FORM:
Office of Criminal District Attorney, Ricardo Rodriguez, Jr.

_____
Josephine Ramirez-Solis, Assistant District Attorney

Hidalgo County Irrigation District #6

_____
Diana Izaguirre
President
Date: _____

_____
Brandon Thompson
Secretary
Date: _____

AI-59795 **Constables** **8. D.**

CC - REGULAR

Meeting Date: 05/30/2017

Submitted For: Larry Gallardo, CONSTABLE PCT. #3

Submitted By: Raquel Ramos, CONSTABLE PCT. #3

Department: CONSTABLE PCT. #3

Information

CAPTION

Constable Pct. 3 - STOP Truancy (1285):
Approval to renew Interlocal Agreements between Hidalgo County and the following school districts - (STOP Truancy Program) for the 2017-2018 school year:
1. La Joya Independent School District
2. Mission Consolidated Independent School District

BACKGROUND

Fiscal Impact

CALENDAR YEAR: 2018 **ACCT. #:** 7-1285-421-00-293-005-8-xxx

FUNDS AVAILABLE Y/N?: Y **MATCHING FUNDS Y/N?:** Y

BUDGETARY IMPACT:

Agreements to be effective 09-01-17 to 08-31-18 for the FY18 (2017-2018 school year)

50% Funding by District:
La Joya ISD: $33,375.40
Mission CISD: $70,778.45
Total: $104,153.86

50% Cash match portion by Hidalgo County is $104,153.86; total appopriation is $208,307.72 (school district funding and CO cash match)

Attachments

Salaries Worksheet
agreement
agreement
legal approval

Form Review

Inbox	Reviewed By	Date
Budget & Management	Veronica Ortiz	05/11/2017 08:56 AM

Final Approval	Monica Salinas	05/26/2017 02:58 PM
Form Started By: Raquel Ramos		Started On: 05/11/2017 07:39 AM
Final Approval Date: 05/26/2017		

Hidalgo County Precinct 3
Project STOP (Truancy)
2017-2018 School Fiscal Year
Salaries Worksheet

		SCHOOL DISTRICTS			
		MISSION	LA JOYA	MISSION	
		DEPUTY CONSTABLE STEP I Slot #0003 193615	DEPUTY CONSTABLE STEP I Slot #0002 121363	DEPUTY CONSTABLE STEP II Slot #0001 24821	
					TOTAL
Current Salary		44,577.00	44,577.00	45,691.00	134,845.00
Step Increase		1,114.00	1,114.00	4,131.00	6,359.00
5% COLA Increase		2,284.55	2,284.55	2,491.10	7,060.20
TOTAL SALARY:		$ 47,975.55	$ 47,975.55	$ 52,313.10	$ 148,264.20
Longevity (Includes annual increase)		-	-	420.00	420.00
Supplement Pay		1,200.00	1,200.00	3,000.00	5,400.00
TOTAL ALLOWANCES:		$ 1,200.00	$ 1,200.00	$ 3,420.00	$ 5,820.00
TOTAL COMPENSATION:		$ 49,175.55	$ 49,175.55	$ 55,733.10	$ 154,084.20
	RATES				
Health Insurance	$ 6,300.00	$ 6,300.00	$ 6,300.00	$ 6,300.00	$ 18,900.00
Life Insurance	$ 43.56	43.56	43.56	43.56	130.68
FICA	7.65%	3,761.93	3,761.93	4,263.58	11,787.44
Retirement	11.47%	5,640.44	5,640.44	6,392.59	17,673.46
Unemployment	0.60%	295.05	295.05	334.40	924.51
Workers Compensation	3.12%	1,534.28	1,534.28	1,738.87	4,807.43
TOTAL FRINGE BENEFITS:		$ 17,575.26	$ 17,575.26	$ 19,073.00	$ 54,223.52
TOTAL COMPENSATION & FRINGE BENEFITS:		$ 66,750.81	$ 66,750.81	$ 74,806.10	$ 208,307.71
CASH MATCH 50% (County Portion)		$ 33,375.40	$ 33,375.40	$ 37,403.05	$ 104,153.86
50% (School District Portion)		$ 33,375.40	$ 33,375.40	$ 37,403.05	$ 104,153.86

STATE OF TEXAS §
§
COUNTY OF HIDALGO §

INTERLOCAL COOPERATION AGREEMENT BETWEEN
LA JOYA INDEPENDENT SCHOOL DISTRICT
AND THE COUNTY OF HIDALGO

THIS Agreement is made on this the ____ day of _____, 2017, by and between **LA JOYA INDEPENDENT SCHOOL DISTRICT**, hereinafter referred to as "District", and the **COUNTY OF HIDALGO, TEXAS**, hereinafter referred to as "County", by and through **CONSTABLE PRECINCT #3** pursuant to the authority granted and in compliance with the provisions of the Texas Interlocal Cooperation Act, (the "Act") Chapter 791, Texas Government Code, as follows:

WITNESSETH:

WHEREAS, the District is organized as an Independent School District under the laws of the State of Texas for the purpose of educating and providing other activities, which assist and benefit the youth and general community; and

WHEREAS, an Interlocal Agreement may be entered into by any local government which includes a political subdivision, and which is defined in Section 791.003(4) and (5) of the Local Government Code, as any corporate and political entity organized under state law, and

WHEREAS, the District seeks to increase the safety and security for faculty, students, and members of the community; and

WHEREAS, the County and District have a common interest in reducing crimes committed by juveniles and reducing juvenile delinquency behavior and increasing school attendance; and

WHEREAS, the District has requested that a County peace officer be available to assist the District by responding to emergencies or other exigent circumstances at a District campus or facility in which the response of a peace officer would be appropriate;

NOW, THEREFORE, County and District, in consideration of the mutual promises, covenants and agreements set forth in this Agreement, County and District agree as follows:

1. County by and through the Constable Precinct #3 will, pursuant to its applicable personnel policies, rules and procedures, hire a commissioned peace officer and the necessary support staff to continue to provide security and support at the District. The County peace officer shall use his best efforts to address crimes

committed by juveniles and reduce juvenile delinquency behavior as well as assist the District in their efforts to increase school attendance.

2. During the term of this Agreement, such peace officer at all times, shall remain and be treated as an employee of the County and shall be subject to all applicable personnel policies, rules and procedures of the County.

3. In addition to the duties identified in paragraph 1 herein, the County agrees that such peace officer assigned to the District shall use his best efforts to respond to emergencies or other exigent circumstances which may exist at District campuses and facilities during regular school hours in which the response of a peace officer would be appropriate. However, the peace officer shall use his sole judgment and/or discretion to determine whether the situation merits an emergency or exigent circumstance requiring response by such officer. The District agrees that the County shall not be liable for failure to respond to any incident at a District campus or facility.

4. The parties agree that the peace officer will not be required to perform any school administrative duties required by law, other than those identified herein, nor will the peace officer be required to perform the duties of a District security guard.

5. **Term**. The period of performance of this Agreement shall commence on September 1, 2017 and terminate on August 31, 2018. Either party shall have the right to terminate this Agreement with or without cause upon sixty (60) days written notice.

6. **Work Hours.** The peace officer shall be assigned to District business from 8 a.m. to 5 p.m., Monday through Friday in lieu thereof "at such other times agreed by District and County".

7. **Time Off**. The County agrees to notify the District's Human Resource's Department when the peace officer takes sick leave or has scheduled vacation, overtime or compensatory time off in accordance with County notice provisions.

8. The County, through the Constable's Office, may, but is not required to, consult with the District prior to making any staffing changes in connection with this Agreement but the recruiting, hiring and retention of County personnel shall remain the sole prerogative of the Constable's Office. However, should the District believe that the peace officer is not fulfilling his/her job duties or meeting the District's expected performance standards under this Agreement, the District shall notify the Constable with specific information regarding such nonperformance. The County shall, within fifteen (15) days, correct the unsatisfactory performance. Should the County fail to correct or address the District's nonperformance concerns, the District shall have the prerogative to terminate this Agreement upon an additional fifteen (15) days written notice to the County.

9. Each party shall contribute one-half of the costs associated with administering the performance of this Agreement at the District; upon the County's receipt of payment from the District, the County shall fund the amount of Thirty Three Thousand and Three Hundred and Seventy Five and 40/100 Dollars ($33,375.40) for its one-half share of the cost associated with assigning a peace officer pursuant to the terms and conditions described herein.

10. Within fifteen (15) days of receiving an invoice from the County, the District agrees to pay to the County the one match payment in the amount of Thirty Three Thousand and Three Hundred and Seventy Five and 40/100 ($33,375.40) as consideration to the County for the continued performance of the Agreement by County at the District.

11. Each party agrees to conform to its own applicable purchasing laws, regulations, policies and procedures with respect to the portion of the services under this Agreement performed by each party.

12. The County may, but is not required to, consult with the District prior to making any staffing changes in connection with this Agreement but the recruiting, hiring, and retention of County personnel shall remain the sole prerogative of the County.

13. **Termination.** Either party shall have the right to terminate this Agreement with or without cause upon sixty (60) days written notice.

14. **Conflict of Applicable Law.** Nothing in this Agreement shall be construed so as to require the commission of any act contrary to law, and whenever there is any conflict between and provision of their Agreement and any present or future law, ordinance, or administrative, executive or judicial regulation, order or decree, or amendment thereof, contrary to which the parties have no legal right to contract, the latter shall prevail, but in such event the affected provision or provisions of this Agreement shall be modified only to the extent necessary to bring them within the legal requirements and only during the time such conflict exists.

15. **No Waiver.** No waiver by any party hereto of any breach of any provision of the Agreement shall be deemed to be a waiver of any preceding or succeeding breach of the same or any other provision hereof.

16. **Entire Agreement.** This Agreement contains the entire contract between the parties hereto and each party acknowledges that neither has made (either directly or through any agent or representative) any representation or agreement in connection with this Agreement not specifically set forth herein. This Agreement may be modified or amended only by agreement in writing executed by County and District, and not otherwise.

17. **TEXAS LAW TO APPLY.** THIS AGREEMENT SHALL BE CONSTRUED

UNDER AND IN ACCORDANCE WITH THE LAWS OF THE STATE OF TEXAS, AND ALL OBLIGATIONS OF THE PARTIES CREATED HEREUNDER ARE PERFORMABLE IN HIDALGO COUNTY, TEXAS. THE PARTIES HEREBY CONSENT TO PERSONAL JURISDICTION IN HIDALGO COUNTY, TEXAS.

18. **Notice.** Except as may be otherwise specifically provided in this Agreement, all notices, demands, requests or communication required or permitted hereunder shall be in writing and shall either be (i) personally delivered against a written receipt, or (ii) sent by registered or certified mail, return receipt requested, postage prepaid and addressed to the parties at the addresses set forth below, or at such other addresses as may have been theretofore specified by written notice delivered in accordance herewith:

If to District:	La Joya Independent School District Attention: Dr. Aida T. Benavides, Superintendent 200 W. Expressway 83 La Joya, Texas 78560
If to County:	Hidalgo County, Texas Attention: Ramon Garcia, County Judge P.O. Box 1356 Edinburg, Texas 78540-1356
with copy to :	Hidalgo County Constable Precinct No. 3 Attention: Constable Lazaro Gallardo, Jr. 730 N. Breyfogle, Suite B Mission, Texas 78574

Each notice, demand, request or communication which shall be delivered or mailed in the manner described above shall be deemed sufficiently given for all purposes at such time as it is personally delivered to the addressee or, if mailed, at such time as it is deposited in the United States mail.

19. **Additional Documents.** The parties hereto covenant and agree that they will execute such other and further instruments and documents as are or may become necessary or convenient to effectuate and carry out the terms of this Agreement.

20. **Successors.** This Agreement shall be binding upon and inure to the benefit of the parties hereto and their respective heirs, executors, administrators, legal representatives, successors, and assigns where permitted by this Agreement.

21. **Assignment.** This Agreement shall not be assignable.

22. **Headings.** The headings and captions contained in this Agreement are solely for convenience reference and shall not be deemed to affect the meaning or interpretation of any provision or paragraph hereof.

23. **Gender and Number.** All pronouns used in this Agreement shall include the other gender, whether used in the masculine, feminine or neuter gender, and singular shall include the plural whenever and so often as may be appropriate.

24. **Authority to Execute.** The execution and performance of this Agreement by District and County have been duly authorized by all necessary laws, resolutions or corporate action, and this Agreement constitutes the valid and enforceable obligations of District and County in accordance with its terms.

25. **Governmental Purpose.** Each party hereto is entering into this Agreement for the purpose of providing for governmental services or functions and will pay for such services out of current revenues available to the paying party as herein provided.

26. **No Waiver of Governmental Immunity**. Neither County nor District, via this agreement, waive governmental immunity from suit, or from liability, except as expressly set forth by the Texas Legislature in the Texas Government Code. The fact that County and District have entered into this agreement shall not in any way, constitute a deliberate waiver of immunity by either entity, which immunities are expressly reserved by both parties.

27. **Commitment of Current Revenues Only.** In the event that during any term hereof, the governing body of any party does not appropriate sufficient funds to meet the obligations of such party under this Agreement, then any party may terminate this Agreement upon ninety (90) days written notice to the other party. Each of the parties hereto agrees, however, to use its best efforts to secure funds necessary for the continued performance of this Agreement. The parties intend this provision to be a continuing right to terminate this Agreement at the expiration of each budget period of each party hereto.

28. **Nondiscrimination.** The parties agree that services and/or project proposals mutually agreed to shall be conducted in a manner that does not discriminate against any person on a basis prohibited by applicable County or District policy, State or Federal law, including without limitation, race, color, national origin, religion, sex, age, veteran, status, or disability.

WITNESS THE HANDS OF THE PARTIES and effective as of the day and year

first written above.

LA JOYA INDEPENDENT SCHOOL DISTRICT

_____
Oscar "Coach" Salinas, President, Board of Trustees

ATTEST:

_____
Claudia Ochoa, Secretary, Board of Trustees

HIDALGO COUNTY

_____
Ramon Garcia, County Judge

ATTEST:

_____
Arturo Guajardo. Jr., County Clerk

APPROVED AS TO FORM:

Office of Criminal District Attorney, Ricardo Rodriguez, Jr.

BY:_____
Josephine Ramirez-Solis
Assistant District Attorney

STATE OF TEXAS §
§
COUNTY OF HIDALGO §

FIRST AMENDED INTERLOCAL COOPERATION AGREEMENT BETWEEN MISSION CONSOLIDATED INDEPENDENT SCHOOL DISTRICT AND THE COUNTY OF HIDALGO, TEXAS

THIS First Amended Interlocal Cooperation Agreement, hereinafter referred to as "Agreement" is made on this the ____ day of _____, 2017, by and between **MISSION CONSOLIDATED INDEPENDENT SCHOOL DISTRICT**, hereinafter referred to as "District", and the **COUNTY OF HIDALGO, TEXAS**, hereinafter referred to as "County", by and through HIDALGO COUNTY CONSTABLE PRECINCT #3, hereinafter referred to as Constable Precinct #3 pursuant to the authority granted and in compliance with the provisions of the Texas Interlocal Cooperation Act, (the "Act") Chapter 791, Texas Government Code, as follows:

WITNESSETH:

WHEREAS, the District is organized as an Independent School District under the laws of the State of Texas for the purpose of educating and providing other activities, which assist and benefit the youth and general community; and

WHEREAS, an Interlocal Agreement may be entered into by any local government which includes a political subdivision, and which is defined in Section 791.003(4) and (5) of the Local Government Code, as any corporate and political entity organized under state law, and

WHEREAS, District seeks to increase the safety and security for faculty, students, and members of the community; and

WHEREAS, County and District have a common interest in reducing crimes committed by juveniles and reducing juvenile delinquency behavior and increasing school attendance; and

WHEREAS, District has requested that two (2) County peace officers be available to assist the District by responding to emergencies or other exigent circumstances at a District campus or facility in which the response of a peace officer or officers would be appropriate;

NOW, THEREFORE, County and District, in consideration of the mutual promises, covenants and agreements set forth in this Agreement, County and District agree as follows:

1. County by and through the Constable Precinct #3 will, pursuant to its applicable personnel policies, rules, and procedures, hire two (2) commissioned peace officers and the necessary support staff to continue to provide security and support at the District. The County peace officers shall use their best efforts to address crimes committed by juveniles and reduce juvenile delinquency behavior as well as assist the District in its efforts to increase school attendance.

2. During the term this Agreement, such peace officers at all times, shall remain and be treated as an employees of County and shall be subject to all applicable personnel policies, rules, and procedures of County.

DRAFT

3. In addition to the duties identified in paragraph 1 herein, County agrees that such peace officers assigned to District shall use their best efforts to respond to emergencies or other exigent circumstances which may exist at District campuses and facilities during regular school hours in which the response of a peace officer or officers would be appropriate. However, the peace officers shall use their sole judgment and/or discretion to determine whether the situation merits an emergency or exigent circumstance requiring response by such a peace officer or officers. District agrees that County shall not be liable for failure to respond to any incident at a District campus or facility.

4. The parties agree that the peace officers will not be required to perform any school administrative duties required by law, other than those identified herein, nor will the peace officers be required to perform the duties of a District security guard.

5. **Term.** The period of performance of this Agreement shall commence on September 1, 2017 and terminate on August 31, 2018. Either party shall have the right to terminate this Agreement with or without cause upon sixty (60) days written notice.

6. **Work Hours.** The peace officers shall be assigned to District business from 8:00 a.m. to 5:00 p.m., Monday through Friday or lieu thereof "at such other times as agreed by District and County".

7. **Time Off.** County agrees to notify District's Human Resources Department when either peace officer takes sick leave or has scheduled vacation, overtime or compensatory time off in accordance with County notice provisions.

8. The County, through Constable Precinct #3, may, but is not required to, consult with District prior to making any staffing changes in connection with this Agreement but the recruiting, hiring and retention of County personnel shall remain the sole prerogative Constable Precinct #3. However, should the District believe that either peace officer is not fulfilling their job duties or meeting the District's expected performance standards under this Agreement, District shall notify the Constable Precinct #3 with specific information regarding such non-performance. County shall, within fifteen (15) days, correct the unsatisfactory performance. Should County fail to correct or address District's non-performance concerns, District shall have the prerogative to terminate this Agreement upon an additional fifteen (15) days written notice to County.

9. Each party shall contribute one-half of the costs associated with administering the performance of this Agreement at the District; upon County's receipt of payment from the District, the County shall fund the amount of Seventy Thousand Seven Hundred and Seventy Eight and 45/100 Dollars ($70,778.45) for its one-half share of the costs associated with assigning the peace officers pursuant to the terms and conditions described herein.

10. Within fifteen (15) days of receiving an invoice from County, District agrees to pay to County one match payment in the amount of Seventy Thousand Seven Hundred and Seventy Eight and 45/100 Dollars ($70,778.45) as consideration to the County for the continued implementation of the Agreement at the District.

11. Each party agrees to conform to its own applicable purchasing laws, regulations, policies and procedures with respect to the portion of the services under this Agreement performed by each party.

12. **Termination.** Either party shall have the right to terminate this Agreement with or without cause upon sixty (60) days written notice.

DRAFT

13. **Conflict of Applicable Law.** Nothing in this Agreement shall be construed so as to require the commission of any act contrary to law, and whenever there is any conflict between and provision of this Agreement and any present or future law, ordinance, or administrative, executive, or judicial regulation, order or decree, or amendment thereof, contrary to which the parties have no legal right to contract, the latter shall prevail, but in such event the affected provision or provisions of this Agreement shall be modified only to the extent necessary to bring them within the legal requirements and only during the time such conflict exists.

14. **No waiver.** No waiver by any party hereto of any breach of any provision of this Agreement shall be deemed to be a waiver of any preceding or succeeding breach of the same or any other provision hereof.

15. **Entire Agreement.** This Agreement contains the entire contract between the parties hereto and each party acknowledges that neither has made (either directly or through any agent or representative) any representation or agreement in connection with this Agreement not specifically set forth herein. This Agreement may be modified or amended only by agreement in writing executed by County and District, and not otherwise.

16. **TEXAS LAW TO APPLY.** THIS AGREEMENT SHALL BE CONSTRUED UNDER AND IN ACCORDANCE WITH THE LAWS OF THE STATE OF TEXAS, AND ALL OBLIGATIONS OF THE PARTIES CREATED HEREUNDER ARE PERFORMABLE IN HIDALGO COUNTY, TEXAS. THE PARTIES HEREBY CONSENT TO PERSONAL JURISDICITION IN HIDALGO COUNTY, TEXAS.

17. **Notice.** Except as may be otherwise specifically provided in this Agreement, all notices, demands, requests, or communication required or permitted hereunder shall be in writing and shall either be (i) personally delivered against a written receipt, or (ii) sent by registered or certified mail, return receipt requested, postage prepaid and addressed to the parties at the addresses set forth below, or at such other addresses as may have been theretofore specified by written notice delivered in accordance herewith:

If to District: Mission Consolidated Independent School District
Attention: Dr. Ricardo López, Superintendent
1201 Bryce Drive
Mission, Texas 78572

If to County: Hidalgo County, Texas
Attention: Ramon Garcia, County Judge
PO Box 1356
Edinburg, Texas 78540-1356

With Copy to: Hidalgo County Constable Precinct No. 3
Attention: Constable Lazaro Gallardo, Jr.
730 N. Breyfogle, Suite B
Mission, Texas 78574

Each notice, demand, request or communication which shall be delivered or mailed in the manner described above shall be deemed sufficiently given for all purposes at such time as it is personally delivered to the addressee or, if mailed, at such time as it is deposited in the United States mail.

DRAFT

18. **Additional Documents.** The parties hereto covenant and agree that they will execute such other and further instruments and documents as are or may become necessary or convenient to effectuate and carry out the terms of this Agreement.

19. **Successors.** This Agreement shall be binding upon and inure to the benefit of the parties hereto and their respective heirs, executors, administrators, legal representatives, successors, and assigns where permitted by this Agreement.

20. **Assignment.** This Agreement shall not be assignable.

21. **Headings.** The headings and captions contained in this Agreement are solely for convenient reference and shall not be deemed to affect the meaning or interpretation of any provision or paragraph hereof.

22. **Gender and Number.** All pronouns used in this Agreement shall include the other gender, whether used in the masculine, feminine or neuter gender, and singular shall include the plural whenever and so often as may be appropriate.

23. **Authority to Execute.** The execution and performance of this agreement by District and County have been duly authorized by all necessary laws, resolutions or corporate action, and this Agreement constitutes the valid and enforceable obligations of District and County in accordance with its terms.

24. **Governmental Purpose.** Each party hereto is entering into this Agreement for the purpose of providing for governmental services or functions and will pay for such services out of current revenues available to the paying party as herein provided.

25. **No Waiver of Governmental Immunity**. Neither County nor District, via this agreement, waive governmental immunity from suit, or from liability, except as expressly set forth by the Texas Legislature in the Texas Government Code. The fact that County and District have entered into this agreement shall not in any way, constitute a deliberate waiver of immunity by either entity, which immunities are expressly reserved by both parties.

26. **Commitment of Current Revenues Only.** In the event that during any term hereof, the governing body of any party does not appropriate sufficient funds to meet the obligations of such party under this Agreement, then any party may terminate this Agreement upon ninety (90) days written notice to the other party. Each of the parties hereto agrees, however, to use its best efforts to secure funds necessary for the continued performance of this Agreement. The parties intend this provision to be a continuing right to terminate this Agreement at the expiration of each budget period of each party hereto.

27. **Nondiscrimination.** The parties agree that services and/or project proposals mutually agreed to shall be conducted in a manner that does not discriminate against any person on a basis prohibited by applicable County or TAMU policy, State or Federal law, including without limitation, race, color, national origin, religion, sex, age, veteran, status, or disability.

DRAFT

WITNESS THE HANDS OF THE PARTIES and effective as of the day and year first written above.

MISSION CONSOLIDATED INDEPENDENT SCHOOL DISTRICT

_____
Patricia O'Cana-Olivarez, President, Board of Trustees

ATTEST:

_____
Petra B. Ramirez, Secretary, Board of Trustees

HIDALGO COUNTY

_____
Ramon Garcia, County Judge

ATTEST:

_____
Arturo Guajardo, Jr., County Clerk

APPROVED AS TO FORM:

Office of Criminal District Attorney, Ricardo Rodriguez, Jr.,

BY: _____
Josephine Ramirez-Solis
Assistant District Attorney

DRAFT

Zimbra **monica.badillo@co.hidalgo.tx.us**

Fwd: Project STOP

From : Raquel Ramos <raquel.ramos@co.hidalgo.tx.us> Tue, May 30, 2017 08:19 AM
Subject : Fwd: Project STOP 2 attachments
To : Monica Badillo <monica.badillo@co.hidalgo.tx.us>, Larry Gallardo <larry.gallardo@co.hidalgo.tx.us>
Cc : Patricia Y. Ramos <patricia.ramos@co.hidalgo.tx.us>, Linda Fong <linda.fong@auditor.co.hidalgo.tx.us>

Good Morning,

This is all that I have received in reference to any type of legal review in reference to the interlocal agreements for today's Commissioner's Court.

Raquel V. Ramos
Administrative Assistant V
Hidalgo County Constable Pct. 3 Dept.
Ph: 956-581-6800
Fax: 956-519-4245
raquel.ramos@co.hidalgo.tx.us

From: "Josephine Ramirez" <josephine.ramirez@da.co.hidalgo.tx.us>
To: "Larry Gallardo" <larry.gallardo@co.hidalgo.tx.us>
Cc: "Rachel Ramos" <raquel.ramos@co.hidalgo.tx.us>
Sent: Monday, May 15, 2017 9:09:42 AM
Subject: Re: Project STOP

Constable,

I made a few revisions to the two agreement. Please see attached. Subject to those changes being included, I approve as to the form of the agreement.

Josephine Ramirez Solis

Assistant Criminal District Attorney

Chief - Civil Division

Office of Criminal District Attorney

Hidalgo County, Texas

100 E. Cano

Edinburg, TX 78539

(956) 292-7609 ext. 8186

(956) 318-2079 FAX

josephine.ramirez@da.co.hidalgo.tx.us

****

The information contained in this e-mail may be 1.SUBJECT TO THE ATTORNEY-CLIENT PRIVILEGE; 2.ATTORNEY WORK PRODUCT; and/or 3.CONFIDENTIAL. It is intended only for the individual or entity designated above. Any distribution, copying, or use of or reliance upon the information contained in this e-mail by or to anyone other than the recipient designated above by the sender is unauthorized and strictly prohibited. **IF YOU HAVE RECEIVED THIS COMMUNICATION IN ERROR, PLEASE ADVISE THE SENDER BY REPLY E-MAIL TO josephine.ramirez@da.co.hidalgo.tx.us AND DELETE THE COMMUNICATION.**

****

On Mon, May 8, 2017 at 3:24 PM, Larry Gallardo <larry.gallardo@co.hidalgo.tx.us> wrote:

> Please Review. would like to get on the next commissioners Court. All I did was update cost, dates and officials.
>
> Larry Gallardo
> Hidalgo County Constable Precinct 3
> 730 North Breyfogle Suite B
> Mission, Texas 78574
> Phone (956) 205-7031 or 7032
> Fax (956) 519-4245
>
> This e-mail is covered by the Electronic Communications Privacy Act, 18 U.S.C. Sections 2510-2521 and is legally privileged. The information contained in this e-mail is intended only for use of the individual or entity named above. If the reader of this message is not the intended recipient, or the employee or agent responsible for delivering it to the intended recipient, you are hereby notified that any dissemination, distribution or copying of this communication is strictly prohibited. If you have received this communication in error, please immediately notify us by e-mail, and destroy the original message.

2017 Mission CISD Agreement-REVISED.docx
29 KB

2017 La Joya ISD Contract-REVISED.doc
52 KB

AI-59905 **Constables** **8. E.**

CC - REGULAR

Meeting Date: 05/30/2017

Submitted For: Horaldo Sanchez, CONSTABLE PCT. #4

Submitted By: Nayla Munoz, CONSTABLE PCT. #4

Department: CONSTABLE PCT. #4

Information

CAPTION

Constable Precinct 4:
Discussion, consideration, and approval to appoint Jose Noe Rodriguez as a Reserve Deputy Constable by Constable A. "J.R." Gaitan, Constable Precinct 4 in accordance with Texas Local Government Code Section 86.012.

BACKGROUND

Sec. 86.012. RESERVE DEPUTY CONSTABLES. (a) The commissioners court of a county may authorize a constable of the county to appoint reserve deputy constables. The commissioners court may limit the number of reserve deputy constables that a constable may appoint.

Fiscal Impact

Attachments

LocalCode

Form Review

Inbox	Reviewed By	Date
Budget & Management	Veronica Ortiz	05/16/2017 01:59 PM
Final Approval	Monica Salinas	05/26/2017 02:58 PM
Form Started By: Nayla Munoz		Started On: 05/16/2017 01:41 PM
Final Approval Date: 05/26/2017		

LOCAL GOVERNMENT CODE

CHAPTER 86. CONSTABLE

SUBCHAPTER A. GENERAL PROVISIONS

§ 86.001. ELIGIBILITY TO SERVE AFTER BOUNDARY CHANGE. A person who has served as the constable of a precinct for 10 or more consecutive years before a change is made in the boundaries of the precinct is not ineligible for reelection in the precinct because of residence outside the precinct if the constable's residence is within the boundaries of the precinct as they existed before the change.

Acts 1987, 70th Leg., ch. 149, § 1, eff. Sept. 1, 1987.

§ 86.002. OATH; BOND. (a) Before entering on the duties of office, a person who is elected to the office of constable must execute a bond with two or more good and sufficient sureties or with
a solvent surety company authorized to do business in this state. The bond must be payable to the governor and the governor's successors in office and conditioned that the constable will faithfully perform the duties imposed by law. The bond must be approved by the commissioners court of the county. The commissioners court shall set the bond in an amount of not less than
$500 or more than $1,500.

(b) A person who is elected constable must also take and sign the constitutional oath of office. The oath shall be endorsed

on the bond, together with the certificate of the officer who administers the oath. The bond and oath must be deposited and recorded in the office of the clerk of the county court.

(c) The bond is not void on the first recovery but may be sued on from time to time in the name of an injured party until the whole amount of the bond is recovered.

(d) A person who is elected or appointed to the office of constable and who has given the necessary bond and taken the oath of
office may immediately perform the duties of the office. The acts of the constable are as valid in law as if the constable were commissioned.

(e) Repealed by Acts 1995, 74th Leg., ch. 683, § 1, eff. Aug. 28, 1995.

Acts 1987, 70th Leg., ch. 149, § 1, eff. Sept. 1, 1987. Amended by Acts 1995, 74th Leg., ch. 683, § 1, eff. Aug. 28, 1995; Acts 2005, 79th Leg., ch. 1094, § 18, eff. Sept. 1, 2005.

§ 86.0021. QUALIFICATIONS; REMOVAL. (a) A person is not eligible to serve as constable unless:

(1) the person is eligible to be licensed under Sections 1701.309 and 1701.312, Occupations Code, and:

(A) has at least an associate's degree conferred
by an institution of higher education accredited by an accrediting organization recognized by the Texas Higher Education Coordinating Board;

(B) is a special investigator under Article 2.122(a), Code of Criminal Procedure; or

(C) is an honorably retired peace officer or honorably retired federal criminal investigator who holds a certificate of proficiency issued under Section 1701.357, Occupations Code; or

(2) the person is an active or inactive licensed peace officer under Chapter 1701, Occupations Code.

(b) On or before the 270th day after the date a constable takes office, the constable shall provide, to the commissioners court of the county in which the constable serves, evidence that the constable has been issued a permanent peace officer license under Chapter 1701, Occupations Code. A constable who fails to provide evidence of licensure under this subsection or who fails to maintain a permanent license while serving in office forfeits the office and is subject to removal in a quo warranto proceeding under Chapter 66, Civil Practice and Remedies Code.

(c) The license requirement of Subsection (b) supersedes the license requirement of Section 1701.302, Occupations Code.

Added by Acts 1997, 75th Leg., ch. 884, § 3, eff. Jan. 1, 1998. Amended by Acts 1999, 76th Leg., ch. 877, § 1, eff. Aug. 30, 1999; Acts 2001, 77th Leg., ch. 1420, § 14.821, eff. Sept. 1, 2001; Acts 2005, 79th Leg., ch. 954, § 1, eff. June 18, 2005.

§ 86.003. NEW BOND; REMOVAL. (a) If any of the sureties of a constable dies, permanently moves from this state, becomes insolvent, or is released from liability as provided by law or if the commissioners court determines that the bond of the constable is insufficient, the court shall issue a citation that requires the constable to appear at a time set in the citation, after the 10th day but on or before the 30th day after the date the citation is issued, in order to execute a new bond with good and sufficient surety.

(b) If the constable neglects or refuses to appear to execute the bond at the designated time, the constable shall cease to perform the duties of the office and shall be removed from office

by the judge of the district court in the manner provided by law for
the removal of county officers.

Acts 1987, 70th Leg., ch. 149, § 1, eff. Sept. 1, 1987.

SUBCHAPTER B. DEPUTIES

§ 86.011. APPOINTMENT OF DEPUTY CONSTABLE. (a) An elected constable who desires to appoint a deputy must apply in writing to the commissioners court of the county and show that it is necessary to appoint a deputy in order to properly handle the business of the constable's office that originates in the constable's precinct. The application must state the name of the proposed deputy. The commissioners court shall approve and confirm the appointment of the deputy only if the commissioners court determines that the constable needs a deputy to handle the business originating in the precinct.

(b) Each deputy constable must qualify in the manner provided for deputy sheriffs.

(c) The constable is responsible for the official acts of each deputy of the constable. The constable may require a deputy to post a bond or security. A constable may exercise any remedy against a deputy or the deputy's surety that a person may exercise against the constable or the constable's surety.

(d) A person commits an offense if the person:

(1) serves as a deputy constable and the person has not been appointed as provided by Subsection (a); or

(2) is a constable and issues a deputyship without the

consent and approval of the commissioners court.

(e) An offense under Subsection (d) is punishable by a fine of not less than $50 or more than $1,000.

Acts 1987, 70th Leg., ch. 149, § 1, eff. Sept. 1, 1987.

§ 86.012. RESERVE DEPUTY CONSTABLES. (a) The commissioners court of a county may authorize a constable of the county to appoint reserve deputy constables. The commissioners court may limit the number of reserve deputy constables that a constable may appoint.

(b) A reserve deputy constable serves at the discretion of the constable and may be called into service at any time that the constable considers it necessary to have additional officers to preserve the peace and enforce the law. The constable may authorize a reserve deputy constable who is a peace officer as described by Article 2.12, Code of Criminal Procedure, to carry a weapon or act as a peace officer at all times, regardless of whether the reserve deputy constable is engaged in the actual discharge of official duties, or may limit the authority of the reserve deputy constable to carry a weapon or act as a peace officer to only those times during which the reserve deputy constable is engaged in the actual discharge of official duties. A reserve deputy constable who is not a peace officer as described by Article 2.12, Code of Criminal Procedure, may act as a peace officer only during the actual discharge of official duties. A reserve deputy constable, regardless of whether the reserve deputy constable is a peace officer as described by Article 2.12, Code of Criminal Procedure, is not:

(1) eligible for participation in any program provided by the county that is normally considered a financial benefit of

full-time employment or for any pension fund created by statute for the benefit of full-time paid peace officers; or

(2) exempt from Chapter 1702, Occupations Code.

(c) A reserve deputy constable must take the official oath and must execute a bond in the amount of $2,000, payable to the constable. The oath and bond must be filed with the county clerk of the county in which the appointment is made. The oath and bond must be given before the reserve deputy constable's entry on duty and simultaneously with the officer's appointment.

(d) While actively engaged in an assigned duty at the call of the constable, a reserve deputy constable is vested with the same rights, privileges, and duties of any other peace officer in this state.

(e) The county and the constable do not incur any liability by reason of the appointment of a reserve deputy constable if the reserve deputy constable incurs a personal injury while serving in that capacity.

Acts 1987, 70th Leg., ch. 149, § 1, eff. Sept. 1, 1987. Amended by Acts 1999, 76th Leg., ch. 90, § 3, eff. Sept. 1, 1999; Acts 2001, 77th Leg., ch. 1420, § 14.822, eff. Sept. 1, 2001.

SUBCHAPTER C. POWERS AND DUTIES

§ 86.021. GENERAL POWERS AND DUTIES. (a) A constable shall execute and return as provided by law each process, warrant, and precept that is directed to the constable and is delivered by a lawful officer. Notices required by Section 24.005, Property Code, relating to eviction actions are process for purposes of this section that may be executed by a constable.

(b) A constable may execute any civil or criminal process throughout the county in which the constable's precinct is located and in other locations as provided by the Code of Criminal Procedure or by any other law.

(c) A constable expressly authorized by statute to perform an act or service, including the service of civil or criminal process, citation, notice, warrant, subpoena, or writ, may perform the act or service anywhere in the county in which the constable's precinct is located.

(d) Regardless of the Texas Rules of Civil Procedure, all civil process may be served by a constable in the constable's county or in a county contiguous to the constable's county, except that a constable who is a party to or interested in the outcome of a suit may not serve any process related to the suit.

(e) The constable shall attend each justice court held in the precinct.

Acts 1987, 70th Leg., ch. 149, § 1, eff. Sept. 1, 1987. Amended by Acts 1989, 71st Leg., ch. 1, § 13(a), eff. Aug. 28, 1989; Acts 1997, 75th Leg., ch. 884, § 1, eff. Jan. 1, 1998.

§ 86.022. POWER TO SUMMON RESIDENT ASSISTANCE. (a) If a constable encounters resistance in the execution of any lawful process or in the arrest of an offender, the constable may call for assistance any resident of the county who is convenient.

(b) A person who fails or refuses to obey a call for assistance may, on the motion of the constable, be fined by a justice of the peace in the manner provided for contempt. The amount of the fine may not exceed $10. The person who is accused of not providing assistance must be given three days' notice of the motion.

Acts 1987, 70th Leg., ch. 149, § 1, eff. Sept. 1, 1987.

§ 86.023. COLLECTION LIABILITY. If, for collection, a constable receives a bond, bill, note, or account from any person and the constable gives a receipt in an official capacity for the instrument or account, the constable and the constable's sureties are liable under the constable's bond for the amount collected if the constable fails to pay the amount on demand to the person for whom the constable made the collection.

Acts 1987, 70th Leg., ch. 149, § 1, eff. Sept. 1, 1987.

§ 86.024. FAILURE TO EXECUTE PROCESS. (a) If a constable fails or refuses to execute and return according to law a process, warrant, or precept that is lawfully directed and delivered to the constable, the constable shall be fined for contempt before the court that issued the process, warrant, or precept on the motion of the person injured by the failure or refusal.

(b) The fine shall be set at not less than $10 or more than $100, with costs. The fine shall be for the benefit of the injured person. The constable must be given 10 days' notice of the motion.

Acts 1987, 70th Leg., ch. 149, § 1, eff. Sept. 1, 1987.

§ 86.025. UNFINISHED BUSINESS. If a constable vacates the office for any reason, all unfinished business shall be transferred to the succeeding constable and completed in the same manner as if the successor had begun the business.

Acts 1987, 70th Leg., ch. 149, § 1, eff. Sept. 1, 1987.

AI-59922 **Sheriff's Office** **9. A.**

CC - REGULAR

Meeting Date: 05/30/2017

Submitted For: Joel Rivera, SHERIFF DEPT.

Submitted By: Emilia Uriegas, SHERIFF DEPT.

Department: SHERIFF DEPT.

Information

CAPTION

Sheriff's Office OCDETF (1284):
1. Approval of FY2017 Overtime Agreement (Investigation Number SW-TXS-1059) between the Organized Crime Drug Enforcement Task Forces (OCDETF) and the Hidalgo County Sheriff's Office in the amount of $8,000.00.
2. Authorization to pay overtime reimbursable under the grant terms and conditions.
3. Approval of certification of revenues as certified by the County Auditor for the OCDETF agreement.
4. Approval of appropriation of funds in the amount of $8,000.00.

BACKGROUND

Funding is for the period of 06/01/2017 to 09/30/2017.

Fiscal Impact

CALENDAR YEAR: SEE BELOW **ACCT. #:** SEE BELOW

FUNDS AVAILABLE Y/N?: Y **MATCHING FUNDS Y/N?:** N

BUDGETARY IMPACT:

Grant Fiscal Year: 2017
County Fiscal/Calendar Year: 2017
Account Fiscal Year: 7

Appropriation of funds in the amount of $8,000.00 for the Organized Crime Drug Enforcement Task Forces (OCDETF). Funding is for the period of 06/01/17 to 09/30/17.

Revenue Account #: 7-1284-331-11-280-064-7-000 - OCDETF

Note: Expenses relating to fringe benefits for the overtime hours are to be charged to the Sheriff's Office General Fund Budget (Account No. 7-1100-421-00-280-001-0-XXX).

Attachments

agreement
budget.amendment
COR request
COR

Form Review

Inbox	Reviewed By	Date
Emilia Uriegas (Originator)	Emilia Uriegas	05/22/2017 04:45 PM
Budget & Management	Veronica Ortiz	05/23/2017 08:07 AM
Final Approval	Monica Salinas	05/26/2017 02:58 PM
Form Started By: Emilia Uriegas		Started On: 05/19/2017 11:03 AM
Final Approval Date: 05/26/2017		

ORGANIZED CRIME DRUG ENFORCEMENT TASK FORCES

FY 2017 Agreement

FOR THE USE OF THE STATE OR LOCAL OVERTIME AND AUTHORIZED EXPENSE/STRATEGIC INITIATIVE PROGRAM

Federal Tax Identification #: 74-6000717 DC#: S-32-

Amount Requested: $ 8,000.00

Number of Officers Listed: 1

OCDETF Investigation / Strategic Initiative Number: SW-TXS-1059

Operation Name: "Sorry Hank"

From: June 1, 2017 (Beginning Date of Agreement)

To: September 30, 2017 (Ending Date of Agreement)

Federal Agency Investigations: Number: M5-16-0032

State or Local Organization

Narcotics Supervisor: Captain Norbert Leal

Telephone Number: (956) 383-8114

E-mail Address: norbert.leal@hidalgoso.org

Fax # (if applicable): (956) 393-6179

State or Local Organization Name and Address:

Hidalgo County Sheriff's Office

711 El Cibolo Road

Edinburg, TX 78541

Sponsoring Federal Agency(ies): DEA

Sponsoring Federal Agency Group/Squad Supervisor: Juan A. Trevino, GS

Telephone Number: (956) 992-8427

E-mail Address: Juan.a.trevino@usdoj.gov

Please provide the name, telephone number, e-mail address, and fax number for the **administrative or financial staff person at the State or Local Organization, who is directly responsible for the billing on the Reimbursement Request:**

Name: Itsayana Vallejo, Grant Accountant

Telephone Number: (956) 318-2511

E-mail Address: itsayana.vallejo@auditor.co.hidalgo.tx.us

Fax # (if applicable): (956) 318-2577

This Agreement is between the above named State or Local Law Enforcement Organization and the Organized Crime Drug Enforcement Task Forces (OCDETF) Program. This Agreement shall be effective when signed by an authorized State or Local Organization official, the sponsoring Federal Agency Special Agent-In-Charge, the sponsoring Agency Regional OCDETF Coordinator, the Assistant United States Attorney Regional OCDETF Director, and the OCDETF Executive Office.

1. It is agreed that the State or Local Law Enforcement officers named on this Agreement will assist in OCDETF Investigations, Strategic Initiatives and prosecutions as set forth in the Organized Crime Drug Enforcement Task Forces State or Local Overtime and Authorized Expense/Strategic Initiative Programs, Policies and Procedures Manual, Fiscal Year 2017.

2. No individual Agreement with a State or Local organization may exceed $25,000, and the cumulative amount of OCDETF State and Local overtime monies that may be expended on a single OCDETF Investigation or Strategic Initiative in a single fiscal year may not exceed $50,000 without express prior approval from the OCDETF Executive Office. The OCDETF Executive Office will entertain requests to exceed these funding levels in particular cases. Please submit a written request including justification approved by the AUSA Regional Director to the OCDETF Budget Officer/Deputy Budget Officer when seeking to exceed the above stated funding levels.

3. Each Reimbursable Agreement will be allowed no more than six (6) modifications per year. In addition, if the funds for a particular Agreement are completely deobligated with the intention of closing that Agreement, it will not count as a modification for purposes of this policy. These amendments must be transmitted by a memorandum approved and signed by the AUSA Regional OCDETF Director or designee for the region and sent to the OCDETF Executive Office.

4. If an Agreement does not have any activity during the last ninety (90) days, the funds shall automatically be deobligated. The OCDETF Executive Office will assist with the monitoring of the aging Agreements. Further, if a State or Local Organization indicates that it is no longer performing work under a particular Agreement, the State or Local Overtime and Authorized Expense/Strategic Initiative Programs, Policies and Procedures Manual requires that a modification memorandum identifying the amount to be deobligated be submitted to the OCDETF Executive Office as soon as possible after determining that no work is being performed.

5. The State or Local Law Enforcement Organization agrees to provide experienced drug Law Enforcement officers who are identified in this Agreement to work on the specified OCDETF Investigation or Strategic Initiative. Any change in Law Enforcement officers assigned must be agreed to by all approving officials.

6. Officers who are not deputized shall possess no Law Enforcement authority other than that conferred by virtue of their position as a commissioned officer of their parent Agency.

7. Officers who are deputized may possess Federal Law Enforcement authority as specified by the Agency affording the deputation.

8. Any State or Local officers assigned to an OCDETF Investigation or Strategic Initiative in accordance with this Agreement are not considered Federal employees and do not take on the benefits of Federal employment by virtue of their participation in the Investigation or Strategic Initiative.

9. OCDETF and the sponsoring Federal Law Enforcement Agency(ies) for the approved OCDETF Investigation or Strategic Initiative will provide to the assigned State or Local officers the clerical, operational and administrative support that is mutually agreed to by the parties in this Agreement.

10. Officers assigned to OCDETF Investigations or Strategic Initiatives should work full-time on the Investigation(s) or Strategic Initiative(s) in order to be paid overtime. In order to satisfy the "full-time" expectation, a Law Enforcement officer should work forty (40) hours per week or eight (8) hours per day on a single or multiple OCDETF Investigation(s) or Strategic Initiative(s). Any established exceptions or waivers to this definition shall be requested by the Regional Coordination Group and attached as Addendum A to the Agreement. [The parent State or Local Organization must pay the base salary of its officers. In the event officers must work overtime on an OCDETF Investigation or Strategic Initiative, the OCDETF Program will reimburse the parent State or Local Law Enforcement Organization for a limited amount of those overtime costs.] The Organization is responsible for paying its Law Enforcement officer(s) for their overtime, travel and per diem expenses. To ensure proper and complete utilization of OCDETF overtime and expense allocations, reimbursement claims must be submitted monthly on the OCDETF Reimbursement Request Form. The OCDETF Executive Office may refuse payment on any reimbursement request that is not submitted to the OCDETF Regional Coordination Group within thirty (30) days of the close of the month in which the overtime was worked.

11. It is the responsibility of the State or Local Organization to retain and have available for inspection sufficient supporting documentation for all regular hours and overtime hours worked towards a specific OCDETF case. Officers' timesheets must reflect work towards a specific OCDETF case and must be reviewed and signed by an authorized State or Local official.

12. Analysis of reimbursement claims by the Regional Coordination Group may result in a modification of the obligation of funds contained within this Agreement as well as the time period covered. The Organization affected by any such modification will receive a memo notifying them of the changes.

13. Overtime payments, including all other non-OCDETF Federal sources (such as Safe Streets, HIDTA, IRS, ICE, FEMA, etc.) may not, on an annual per person basis, exceed 25% of the current approved Federal salary rate in effect at the time the overtime is performed. The State or Local Organization is responsible for ensuring that this annual payment is not exceeded. The Executive Assistant/OCDETF Program Specialist will monitor these payments via MIS and communicate to the Federal Agency Regional OCDETF Coordinators who provide status updates to any officer approaching the threshold.

14. The overtime log must be attached to the reimbursement request when submitting the monthly invoices. The Sponsoring Federal Agency Supervisory Special Agent and the State or Local official authorized to approve the Reimbursement Request must certify that only authorized expenses are claimed, the regular hours requirement is satisfied, and that overtime has not exceeded 25% of the current Federal salary rate in effect at the time the overtime was worked.

15. Under no circumstances will the State or Local Organization charge any indirect costs for the administration or implementation of this Agreement.

16. The State or Local Organization shall maintain complete and accurate records and accounts of all obligations and expenditures of funds under this Agreement for a period of six (6) years and in accordance with generally accepted accounting principles to facilitate inspection and auditing of such records and accounts.

17. The State or Local Organization shall permit examination and auditing by representatives of the OCDETF Program, the sponsoring Federal Agency(ies), the U.S. Department of Justice, the Comptroller General of the United States, and/or any of their duly-authorized agents and representatives, of any and all records, documents, accounts, invoices, receipts, or expenditures relating to this Agreement. Failure to provide proper documentation will limit State or Local Law Enforcement Organizations from receiving OCDETF funding in the future.

18. The State or Local Organization will comply with Title VI of the Civil Rights Act of 1964 and all requirements applicable to OCDETF Agreements pursuant to the regulations of the Department of Justice (see, e.g., 28 C.F.R. Part 42, Subparts C and G; 28 C.F.R. 50.3 (1991)) relating to discrimination on the grounds of race, color, sex, age, national origin or handicap.

19. This Agreement may be terminated by any of the parties by written notice to the other parties ten (10) business days prior to termination. Billing for outstanding obligations shall be received by OCDETF within thirty (30) days of the notice of termination.

20. The Debt Collection Improvement Act of 1996 requires that most payments made by the Federal government, including vendor payments, must be made by electronic funds transfer (EFT). In accordance with the act, all OCDETF reimbursement payments will be issued via EFT. All participating State and Local Organizations must complete and submit the attached EFT form. The OCDETF Executive Office must receive one EFT form from each participating organization prior to processing their reimbursement payments. In certain circumstances the OCDETF Executive Office may make exceptions for Organizations that are unable to accept this form of payment, however, such Organizations must include written justification in the addendum of each new Agreement.

21. All changes made to the original Agreement must be approved by the OCDETF Executive Office and initialed by the Executive Assistant/OCDETF Program Specialist of the Regional Coordination Group making the revision. The AUSA Regional OCDETF Director or designee must initial all funding changes.

22. The Regional Coordination Group is responsible for identifying and implementing any additional policy requirements, as needed, for its specific region. Those regional policies will be documented in the Addendum B and attached to the approved Agreement. The Organizations are agreeing to adhere to these additional requirements and must have written approval by the Regional Coordination Group for any exceptions to the regional policies.

This Agreement is not a contract or obligation to commit Federal funds in the maximum amounts projected. Funding allocations for the time period set forth and agreed to herein represent projections only and are based upon consultation between the sponsoring Federal Agency and the State or Local Law Enforcement Organization. They are, therefore, subject to modification by OCDETF based upon the progress and needs of the OCDETF Investigation or Strategic Initiative. Additionally, resources are contingent upon the availability of funds per the approval and signature of the OCDETF Executive Office obligating authority. The OCDETF Executive Office will approve and certify that all the terms and conditions of the Agreement have been met.

Each Agreement must be approved and signed by a State or Local Law Enforcement Organization official who has supervisory authority over, and is authorized to assign, the participating Law Enforcement officers to the OCDETF Investigation or Strategic Initiative.

Approved By: _____

Authorized State or Local Official *Title* *Date*

Approved By: _____

Sponsoring Federal Agency Special Agent in Charge or Designee *Date*

Approved By: _____

Sponsoring Agency Regional OCDETF Coordinator *Date*

Approved By: _____

Assistant United States Attorney Regional OCDETF Director *Date*

Funds are encumbered for the State or Local Organization overtime costs and authorized expense/Strategic Initiative Programs specified above. **Subject to availability of funds.**

Funds Certified: _____

OCDETF Executive Office *Date*

Approving Official: _____

OCDETF Executive Office *Date*

ORGANIZED CRIME DRUG ENFORCEMENT TASK FORCES

STATE OR LOCAL LAW ENFORCEMENT OFFICERS ASSIGNED TO PARTICIPATE IN THE STATE AND LOCAL OVERTIME AND AUTHORIZED EXPENSE/STRATEGIC INITIATIVE PROGRAMS

State or Local Organization: Hidalgo County Sheriff's Office

OCDETF Investigation / Strategic Initiative Number: M5-16-0032/SW-TXS-1059

The Law Enforcement officers listed below will assist with the above identified OCDETF Investigation or Strategic Initiative. Any modification of the list of Law Enforcement officers must be agreed to in writing by all of the parties to this Agreement, made a part of the Agreement, and forwarded to the OCDETF Executive Office.

	NAME	TITLE/RANK	DOB
1.	Angelita Perez	Investigator	5/21/83
2.			
3.			
4.			
5.			
6.			
7.			
8.			
9.			
10.			

Addendum A

Definition of "Full-Time Participation" Exemption

Defination of "Full-Time Participation" Exemption

The Southwest Region Coordination Group includes in the definition of "full time participation" as the State/Local Enforcement Officer working the same hours on the assigned investigation (s) as that of the case agent. Some regular hours MUST be worked before overtime will be reimbursed.

Any Other Exceptions or Justifications

There may be exceptions granted for special circumstances for one-time events such as canine searches, aerial surveillance, etc. All special circumstances MUST be approved in writing via email by Regional Coordination Group prior to use. If special circumstances are NOT approved in advance, the exception will not be granted.

Any other exemptions must be pre-approved by the Regional Agency Coordinator.

Addendum B

Identification of Additional Policy Requirements

ACH VENDOR/MISCELLANEOUS PAYMENT ENROLLMENT FORM

PAYEE/COMPANY INFORMATION

Name: Hidalgo County Sheriff's Office	
Address: 100 E. Cano, 3rd Floor	
Edinburg, TX 78539	
Taxpayer ID Number: 746000717	
Contact Person Name: Norma Garcia	Telephone Number: (956) 318-2506

FINANCIAL INSTITUTION INFORMATION

Bank Name: Lone Star National Bank
Nine-Digit ABA Routing Transit Number: 114911687
Depositor Account Number: 71015647
Type of Account: (checking/savings) Checking

Please return with the Reimbursable Agreement

The Debt Collection Improvement Act of 1996 requires that most payments made by the Federal government, including vendor payments, must be made by electronic funds transfer (EFT). A benefit of receiving payments by EFT is that your funds are directly deposited to your account at a financial institution and are available to you on the date of payment.

If you have any question regarding the delivery of remittance information, please contact the financial institution (bank) where your account is held.

If you have any question on the completion of this form, please contact the OCDETF State and Local EFT Coordinator at 202-514-1860

To inquire about a bill please contact: https://www.ipp.gov/

DATE: May 19, 2017

DEPARTMENT HEAD: Sheriff J.E. "Eddie" Guerra

DEPARTMENT NAME: OCDETF Overtime FY2017

ACCOUNT NUMBER: 7-1284-421-00-280-064-7-131

SUBJECT: **Budget Amendments (Increases) in Accordance with Local Government Code, Chapter 111, Subchapter C**

Honorable Commissioners' Court of Hidalgo County:

I would like to request the following Amendments (increases) to my budget in accordance with Local Government Code, Chapter 111, Subchapter C

INCREASE OBJECT NUMBER(S)	ACCOUNT OBJECT NAME	AMOUNT
7-1284-421-00-280-064-7-131	Overtime Pay	8,000.00

	TOTAL APPROPRIATIONS	**8,000.00**
7-1284-331-11-280-064-7-000	**Organized Crime Drug Enforcement Task Force (OCDETF).**	**8,000.00**
	TOTAL REVENUES	**8,000.00**

REASON: **To appropriate budget for the overtime hours for officer assigned to OCDETF investigations (Number SW-TXS-1059).**

Funding period is June 01, 2017 to September 30, 2017.

Note: Expenses relating to fringe benefits for the overtime hours are to be charged to the Sheriff's Office Budget (Account #7-1100-421-00-280-001-0-XXX).

DEPARTMENT HEAD SIGNATURE

/ /

DATE

APPROVED COMMISSIONERS' COURT

ATTEST COUNTY CLERK

Emilia Uriegas

From: Emilia Uriegas <emilia.uriegas@hidalgoso.org>
Sent: Monday, May 22, 2017 4:32 PM
To: 'ray.eufracio@auditor.co.hidalgo.tx.us'; 'linda.fong@auditor.co.hidalgo.tx.us'
Cc: itsayana.vallejo@auditor.co.hidalgo.tx.us
Subject: Certification of Revenues ($8,000.00)
Attachments: COR OCDETF $8,000.pdf

Mr. Eufracio:

This is to formally request the certification of revenues for $8,000.00 in reference to the OCDETF FY17 overtime agreement (AI #59922). I will be requesting that the item be placed on CC agenda of 05/30/17.

Should you have any questions or concerns, feel free to contact me.

Thank you.

Emilia Uriegas
Budget Manager II
Hidalgo County Sheriff's Office
956-393-6028

AI-59922 **Sheriff's Office**

CC - REGULAR

Meeting Date: 06/13/2017

Submitted For: Joel Rivera, SHERIFF DEPT. **Submitted By:** Emilia Uriegas, SHERIFF DEPT.

Department: SHERIFF DEPT.

Information

CAPTION

Sheriff's Office OCDETF (1284):

1. Approval of FY2017 Overtime Agreement (Investigation Number SW-TXS-1059) between the Organized Crime Drug Enforcement Task Forces (OCDETF) and the Hidalgo County Sheriff's Office in the amount of $8,000.00.
2. Authorization to pay overtime reimbursable under the grant terms and conditions.
3. Approval of certification of revenues as certified by the County Auditor for the OCDETF agreement.
4. Approval of appropriation of funds in the amount of $8,000.00.

BACKGROUND

Funding is for the period of 06/01/2017 to 09/30/2017.

Fiscal Impact

CALENDAR YEAR: SEE BELOW **ACCT. #:** SEE BELOW

FUNDS AVAILABLE Y/N?: Y **MATCHING FUNDS Y/N?:** N

BUDGETARY IMPACT:

Grant Fiscal Year: 2017
County Fiscal/Calendar Year: 2017
Account Fiscal Year: 7

Appropriation of funds in the amount of $8,000.00 for the Organized Crime Drug Enforcement Task Forces (OCDETF). Funding is for the period of 06/01/17 to 09/30/17.

Revenue Account #: 7-1284-331-11-280-064-7-000 - OCDETF

Note: Expenses relating to fringe benefits for the overtime hours are to be charged to the Sheriff's Office General Fund Budget (Account No. 7-1100-421-00-280-001-0-XXX).

Attachments

agreement
budget.amendment

Form Review

Inbox	Reviewed By	Date
	Emilia Uriegas	05/19/2017 11:03 AM

Form Started By: Emilia Uriegas Started On: 05/19/2017 11:03 AM

ORGANIZED CRIME DRUG ENFORCEMENT TASK FORCES

FY 2017 Agreement

FOR THE USE OF THE STATE OR LOCAL OVERTIME AND AUTHORIZED EXPENSE/STRATEGIC INITIATIVE PROGRAM

Federal Tax Identification #: 74-6000717 DC#: S-32-

Amount Requested: $ 8,000.00

Number of Officers Listed: 1

OCDETF Investigation / Strategic Initiative Number: SW-TXS-1059

Operation Name: "Sorry Hank"

From: June 1, 2017 (Beginning Date of Agreement)

To: September 30, 2017 (Ending Date of Agreement)

Federal Agency Investigations: Number: M5-16-0032

State or Local Organization

Narcotics Supervisor: Captain Norbert Leal

Telephone Number: (956) 383-8114

E-mail Address: norbert.leal@hidalgoso.org

Fax # (if applicable): (956) 393-6179

State or Local Organization Name and Address:

Hidalgo County Sheriff's Office

711 El Cibolo Road

Edinburg, TX 78541

Sponsoring Federal Agency(ies): DEA

Sponsoring Federal Agency Group/Squad Supervisor: Juan A. Trevino, GS

Telephone Number: (956) 992-8427

E-mail Address: Juan.a.trevino@usdoj.gov

Please provide the name, telephone number, e-mail address, and fax number for the **administrative or financial staff person at the State or Local Organization, who is directly responsible for the billing on the Reimbursement Request:**

Name: Itsayana Vallejo, Grant Accountant

Telephone Number: (956) 318-2511

E-mail Address: itsayana.vallejo@auditor.co.hidalgo.tx.us

Fax # (if applicable): (956) 318-2577

This Agreement is between the above named State or Local Law Enforcement Organization and the Organized Crime Drug Enforcement Task Forces (OCDETF) Program. This Agreement shall be effective when signed by an authorized State or Local Organization official, the sponsoring Federal Agency Special Agent-In-Charge, the sponsoring Agency Regional OCDETF Coordinator, the Assistant United States Attorney Regional OCDETF Director, and the OCDETF Executive Office.

1. It is agreed that the State or Local Law Enforcement officers named on this Agreement will assist in OCDETF Investigations, Strategic Initiatives and prosecutions as set forth in the Organized Crime Drug Enforcement Task Forces State or Local Overtime and Authorized Expense/Strategic Initiative Programs, Policies and Procedures Manual, Fiscal Year 2017.

2. No individual Agreement with a State or Local organization may exceed $25,000, and the cumulative amount of OCDETF State and Local overtime monies that may be expended on a single OCDETF Investigation or Strategic Initiative in a single fiscal year may not exceed $50,000 without express prior approval from the OCDETF Executive Office. The OCDETF Executive Office will entertain requests to exceed these funding levels in particular cases. Please submit a written request including justification approved by the AUSA Regional Director to the OCDETF Budget Officer/Deputy Budget Officer when seeking to exceed the above stated funding levels.

3. Each Reimbursable Agreement will be allowed no more than six (6) modifications per year. In addition, if the funds for a particular Agreement are completely deobligated with the intention of closing that Agreement, it will not count as a modification for purposes of this policy. These amendments must be transmitted by a memorandum approved and signed by the AUSA Regional OCDETF Director or designee for the region and sent to the OCDETF Executive Office.

4. If an Agreement does not have any activity during the last ninety (90) days, the funds shall automatically be deobligated. The OCDETF Executive Office will assist with the monitoring of the aging Agreements. Further, if a State or Local Organization indicates that it is no longer performing work under a particular Agreement, the State or Local Overtime and Authorized Expense/Strategic Initiative Programs, Policies and Procedures Manual requires that a modification memorandum identifying the amount to be deobligated be submitted to the OCDETF Executive Office as soon as possible after determining that no work is being performed.

5. The State or Local Law Enforcement Organization agrees to provide experienced drug Law Enforcement officers who are identified in this Agreement to work on the specified OCDETF Investigation or Strategic Initiative. Any change in Law Enforcement officers assigned must be agreed to by all approving officials.

6. Officers who are not deputized shall possess no Law Enforcement authority other than that conferred by virtue of their position as a commissioned officer of their parent Agency.

7. Officers who are deputized may possess Federal Law Enforcement authority as specified by the Agency affording the deputation.

8. Any State or Local officers assigned to an OCDETF Investigation or Strategic Initiative in accordance with this Agreement are not considered Federal employees and do not take on the benefits of Federal employment by virtue of their participation in the Investigation or Strategic Initiative.

9. OCDETF and the sponsoring Federal Law Enforcement Agency(ies) for the approved OCDETF Investigation or Strategic Initiative will provide to the assigned State or Local officers the clerical, operational and administrative support that is mutually agreed to by the parties in this Agreement.

10. Officers assigned to OCDETF Investigations or Strategic Initiatives should work full-time on the Investigation(s) or Strategic Initiative(s) in order to be paid overtime. In order to satisfy the "full-time" expectation, a Law Enforcement officer should work forty (40) hours per week or eight (8) hours per day on a single or multiple OCDETF Investigation(s) or Strategic Initiative(s). Any established exceptions or waivers to this definition shall be requested by the Regional Coordination Group and attached as Addendum A to the Agreement. [The parent State or Local Organization must pay the base salary of its officers. In the event officers must work overtime on an OCDETF Investigation or Strategic Initiative, the OCDETF Program will reimburse the parent State or Local Law Enforcement Organization for a limited amount of those overtime costs.] The Organization is responsible for paying its Law Enforcement officer(s) for their overtime, travel and per diem expenses. To ensure proper and complete utilization of OCDETF overtime and expense allocations, reimbursement claims must be submitted monthly on the OCDETF Reimbursement Request Form. The OCDETF Executive Office may refuse payment on any reimbursement request that is not submitted to the OCDETF Regional Coordination Group within thirty (30) days of the close of the month in which the overtime was worked.

11. It is the responsibility of the State or Local Organization to retain and have available for inspection sufficient supporting documentation for all regular hours and overtime hours worked towards a specific OCDETF case. Officers' timesheets must reflect work towards a specific OCDETF case and must be reviewed and signed by an authorized State or Local official.

12. Analysis of reimbursement claims by the Regional Coordination Group may result in a modification of the obligation of funds contained within this Agreement as well as the time period covered. The Organization affected by any such modification will receive a memo notifying them of the changes.

13. Overtime payments, including all other non-OCDETF Federal sources (such as Safe Streets, HIDTA, IRS, ICE, FEMA, etc.) may not, on an annual per person basis, exceed 25% of the current approved Federal salary rate in effect at the time the overtime is performed. The State or Local Organization is responsible for ensuring that this annual payment is not exceeded. The Executive Assistant/OCDETF Program Specialist will monitor these payments via MIS and communicate to the Federal Agency Regional OCDETF Coordinators who provide status updates to any officer approaching the threshold.

14. The overtime log must be attached to the reimbursement request when submitting the monthly invoices. The Sponsoring Federal Agency Supervisory Special Agent and the State or Local official authorized to approve the Reimbursement Request must certify that only authorized expenses are claimed, the regular hours requirement is satisfied, and that overtime has not exceeded 25% of the current Federal salary rate in effect at the time the overtime was worked.

15. Under no circumstances will the State or Local Organization charge any indirect costs for the administration or implementation of this Agreement.

16. The State or Local Organization shall maintain complete and accurate records and accounts of all obligations and expenditures of funds under this Agreement for a period of six (6) years and in accordance with generally accepted accounting principles to facilitate inspection and auditing of such records and accounts.

17. The State or Local Organization shall permit examination and auditing by representatives of the OCDETF Program, the sponsoring Federal Agency(ies), the U.S. Department of Justice, the Comptroller General of the United States, and/or any of their duly-authorized agents and representatives, of any and all records, documents, accounts, invoices, receipts, or expenditures relating to this Agreement. Failure to provide proper documentation will limit State or Local Law Enforcement Organizations from receiving OCDETF funding in the future.

18. The State or Local Organization will comply with Title VI of the Civil Rights Act of 1964 and all requirements applicable to OCDETF Agreements pursuant to the regulations of the Department of Justice (see, e.g., 28 C.F.R. Part 42, Subparts C and G; 28 C.F.R. 50.3 (1991)) relating to discrimination on the grounds of race, color, sex, age, national origin or handicap.

19. This Agreement may be terminated by any of the parties by written notice to the other parties ten (10) business days prior to termination. Billing for outstanding obligations shall be received by OCDETF within thirty (30) days of the notice of termination.

20. The Debt Collection Improvement Act of 1996 requires that most payments made by the Federal government, including vendor payments, must be made by electronic funds transfer (EFT). In accordance with the act, all OCDETF reimbursement payments will be issued via EFT. All participating State and Local Organizations must complete and submit the attached EFT form. The OCDETF Executive Office must receive one EFT form from each participating organization prior to processing their reimbursement payments. In certain circumstances the OCDETF Executive Office may make exceptions for Organizations that are unable to accept this form of payment, however, such Organizations must include written justification in the addendum of each new Agreement.

21. All changes made to the original Agreement must be approved by the OCDETF Executive Office and initialed by the Executive Assistant/OCDETF Program Specialist of the Regional Coordination Group making the revision. The AUSA Regional OCDETF Director or designee must initial all funding changes.

22. The Regional Coordination Group is responsible for identifying and implementing any additional policy requirements, as needed, for its specific region. Those regional policies will be documented in the Addendum B and attached to the approved Agreement. The Organizations are agreeing to adhere to these additional requirements and must have written approval by the Regional Coordination Group for any exceptions to the regional policies.

This Agreement is not a contract or obligation to commit Federal funds in the maximum amounts projected. Funding allocations for the time period set forth and agreed to herein represent projections only and are based upon consultation between the sponsoring Federal Agency and the State or Local Law Enforcement Organization. They are, therefore, subject to modification by OCDETF based upon the progress and needs of the OCDETF Investigation or Strategic Initiative. Additionally, resources are contingent upon the availability of funds per the approval and signature of the OCDETF Executive Office obligating authority. The OCDETF Executive Office will approve and certify that all the terms and conditions of the Agreement have been met.

Each Agreement must be approved and signed by a State or Local Law Enforcement Organization official who has supervisory authority over, and is authorized to assign, the participating Law Enforcement officers to the OCDETF Investigation or Strategic Initiative.

Approved By: _____

Authorized State or Local Official *Title* *Date*

Approved By: _____

Sponsoring Federal Agency Special Agent in Charge or Designee *Date*

Approved By: _____

Sponsoring Agency Regional OCDETF Coordinator *Date*

Approved By: _____

Assistant United States Attorney Regional OCDETF Director *Date*

Funds are encumbered for the State or Local Organization overtime costs and authorized expense/Strategic Initiative Programs specified above. **Subject to availability of funds.**

Funds Certified: _____

OCDETF Executive Office *Date*

Approving Official: _____

OCDETF Executive Office *Date*

ORGANIZED CRIME DRUG ENFORCEMENT TASK FORCES

STATE OR LOCAL LAW ENFORCEMENT OFFICERS ASSIGNED TO PARTICIPATE IN THE STATE AND LOCAL OVERTIME AND AUTHORIZED EXPENSE/STRATEGIC INITIATIVE PROGRAMS

State or Local Organization: Hidalgo County Sheriff's Office

OCDETF Investigation / Strategic Initiative Number: M5-16-0032/SW-TXS-1059

The Law Enforcement officers listed below will assist with the above identified OCDETF Investigation or Strategic Initiative. Any modification of the list of Law Enforcement officers must be agreed to in writing by all of the parties to this Agreement, made a part of the Agreement, and forwarded to the OCDETF Executive Office.

	NAME	TITLE/RANK	DOB
1.	Angelita Perez	Investigator	5/21/83
2.			
3.			
4.			
5.			
6.			
7.			
8.			
9.			
10.			

Addendum A

Definition of "Full-Time Participation" Exemption

Defination of "Full-Time Participation" Exemption

The Southwest Region Coordination Group includes in the definition of "full time participation" as the State/Local Enforcement Officer working the same hours on the assigned investigation (s) as that of the case agent. Some regular hours MUST be worked before overtime will be reimbursed.

Any Other Exceptions or Justifications

There may be exceptions granted for special circumstances for one-time events such as canine searches, aerial surveillance, etc. All special circumstances MUST be approved in writing via email by Regional Coordination Group prior to use. If special circumstances are NOT approved in advance, the exception will not be granted.

Any other exemptions must be pre-approved by the Regional Agency Coordinator.

Addendum B

Identification of Additional Policy Requirements

ACH VENDOR/MISCELLANEOUS PAYMENT ENROLLMENT FORM

PAYEE/COMPANY INFORMATION

Name: Hidalgo County Sheriff's Office	
Address: 100 E. Cano. 3rd Floor	
Edinburg, TX 78539	
Taxpayer ID Number: 746000717	
Contact Person Name: Norma Garcia	Telephone Number: (956) 318-2506

FINANCIAL INSTITUTION INFORMATION

Bank Name: Lone Star National Bank
Nine-Digit ABA Routing Transit Number: 114911687
Depositor Account Number: 71015647
Type of Account: (checking/savings) Checking

Please return with the Reimbursable Agreement

The Debt Collection Improvement Act of 1996 requires that most payments made by the Federal government, including vendor payments, must be made by electronic funds transfer (EFT). A benefit of receiving payments by EFT is that your funds are directly deposited to your account at a financial institution and are available to you on the date of payment.

If you have any question regarding the delivery of remittance information, please contact the financial institution (bank) where your account is held.

If you have any question on the completion of this form, please contact the OCDETF State and Local EFT Coordinator at 202-514-1860

To inquire about a bill please contact: https://www.ipp.gov/

DATE: May 19, 2017
DEPARTMENT HEAD: Sheriff J.E. "Eddie" Guerra
DEPARTMENT NAME: OCDETF Overtime FY2017
ACCOUNT NUMBER: 7-1284-421-00-280-064-7-131

SUBJECT: Budget Amendments (Increases) in Accordance with Local Government Code, Chapter 111, Subchapter C

Honorable Commissioners' Court of Hidalgo County:

I would like to request the following Amendments (increases) to my budget in accordance with Local Government Code, Chapter 111, Subchapter C

INCREASE OBJECT NUMBER(S)	ACCOUNT OBJECT NAME	AMOUNT
7-1284-421-00-280-064-7-131	Overtime Pay	8,000.00

	TOTAL APPROPRIATIONS	8,000.00
7-1284-331-11-280-064-7-000	Organized Crime Drug Enforcement Task Force (OCDETF).	8,000.00
	TOTAL REVENUES	8,000.00

REASON: **To appropriate budget for the overtime hours for officer assigned to OCDETF investigations (Number SW-TXS-1059).**

Funding period is June 01, 2017 to September 30, 2017.

Note: Expenses relating to fringe benefits for the overtime hours are to be charged to the Sheriff's Office Budget (Account #7-1100-421-00-280-001-0-XXX).

DEPARTMENT HEAD SIGNATURE

/ /
DATE

APPROVED COMMISSIONERS' COURT

ATTEST COUNTY CLERK

COUNTY of HIDALGO



EDINBURG, TEXAS 78539

HIDALGO COUNTY AUDITOR'S OFFICE
Hidalgo County Administration Building
2808 South Business Highway 281
Edinburg, Texas 78539-6243
PHONE: (956) 318-2511
FAX: (956) 318-2577
WEBSITE: www.co.hidalgo.tx.us/auditor

May 30, 2017

The Honorable Ramon Garcia, Hidalgo County Judge
The Honorable David Fuentes, Commissioner, Precinct No. 1
The Honorable Eduardo "Eddie" Cantu, Commissioner, Precinct No. 2
The Honorable Jose M. Flores, Commissioner, Precinct No. 3
The Honorable Joseph Palacios, Commissioner, Precinct No. 4

RE: Certification of Revenue

Dear Judge and Commissioners:

Pursuant to Local Government Code § 111.0706 SPECIAL BUDGET FOR GRANT OR AID MONEY:

> The county auditor shall certify to the commissioner's court the receipt of all public or private grant or aid money that is available for disbursement in a fiscal year but not included in the budget for that fiscal year. On certification, the court shall adopt a special budget for the limited purpose of spending the grant or aid money for its intended purpose.

I, Ray Eufracio, County Auditor of Hidalgo County, certify to the Hidalgo County Commissioners Court the receipt of an award from the Organized Crime Drug Enforcement Task Force (OCDETF). These funds may now be made available by creating a new special budget or amending a current budget for its intended purposes.

AMOUNT	PURPOSE
$8,000.00	SW-TXS-1059 Organized Crime Drug Enforcement Task Force

CERTIFIED BY:

Raymundo Eufracio, CPA
Hidalgo County Auditor

5/30/17
Date

HIDALGO COUNTY DISTRICT JUDGES

LUIS M. SINGLETERRY JUDGE, 92ND D.C. | RODOLFO DELGADO JUDGE, 93RD D.C. | J. R. "BOBBY" FLORES JUDGE, 139TH D.C. | ROSE GUERRA REYNA JUDGE, 206TH D.C. | JUAN R. PARTIDA JUDGE, 275TH D.C. | MARIO E. RAMIREZ, JR. JUDGE, 332ND D.C. | NOE GONZALEZ JUDGE, 370TH D.C. OVERSEER | LETICIA LOPEZ JUDGE, 389TH D.C. | L. KENO VASQUEZ JUDGE, 398TH D.C. | ISRAEL RAMON, JR. JUDGE, 430TH D.C. | RENEE R. BETANCOURT JUDGE, 449TH D.C.

AI-59922 **Sheriff's Office** 9. A.

CC - REGULAR

Meeting Date: 05/30/2017

Submitted For: Joel Rivera, SHERIFF DEPT. **Submitted By:** Emilia Uriegas, SHERIFF DEPT.

Department: SHERIFF DEPT.

Information

CAPTION

Sheriff's Office OCDETF (1284):
1. Approval of FY2017 Overtime Agreement (Investigation Number SW-TXS-1059) between the Organized Crime Drug Enforcement Task Forces (OCDETF) and the Hidalgo County Sheriff's Office in the amount of $8,000.00.
2. Authorization to pay overtime reimbursable under the grant terms and conditions.
3. Approval of certification of revenues as certified by the County Auditor for the OCDETF agreement.
4. Approval of appropriation of funds in the amount of $8,000.00.

BACKGROUND

Funding is for the period of 06/01/2017 to 09/30/2017.

Fiscal Impact

CALENDAR YEAR: SEE BELOW **ACCT. #:** SEE BELOW

FUNDS AVAILABLE Y/N?: Y **MATCHING FUNDS Y/N?:** N

BUDGETARY IMPACT:

Grant Fiscal Year: 2017
County Fiscal/Calendar Year: 2017
Account Fiscal Year: 7

Appropriation of funds in the amount of $8,000.00 for the Organized Crime Drug Enforcement Task Forces (OCDETF). Funding is for the period of 06/01/17 to 09/30/17.

Revenue Account #: 7-1284-331-11-280-064-7-000 - OCDETF

Note: Expenses relating to fringe benefits for the overtime hours are to be charged to the Sheriff's Office General Fund Budget (Account No.

7-1100-421-00-280-001-0-XXX).

Attachments

agreement
budget.amendment
COR request

Form Review

Inbox	Reviewed By	Date
Emilia Uriegas (Originator)	Emilia Uriegas	05/22/2017 04:45 PM
Budget & Management	Veronica Ortiz	05/23/2017 08:07 AM
Final Approval		
Form Started By: Emilia Uriegas		Started On: 05/19/2017 11:03 AM

Itsayana Vallejo

From: Emilia Uriegas [emilia.uriegas@hidalgoso.org]
Sent: Monday, May 22, 2017 4:32 PM
To: ray.eufracio@auditor.co.hidalgo.tx.us; linda.fong@auditor.co.hidalgo.tx.us
Cc: itsayana.vallejo@auditor.co.hidalgo.tx.us
Subject: Certification of Revenues ($8,000.00)
Attachments: COR OCDETF $8,000.pdf

Mr. Eufracio:

This is to formally request the certification of revenues for $8,000.00 in reference to the OCDETF FY17 overtime agreement (AI #59922). I will be requesting that the item be placed on CC agenda of 05/30/17.

Should you have any questions or concerns, feel free to contact me.

Thank you.

Emilia Uriegas
Budget Manager II
Hidalgo County Sheriff's Office
956-393-6028

DATE: May 19, 2017
DEPARTMENT HEAD: Sheriff J.E. "Eddie" Guerra
DEPARTMENT NAME: OCDETF Overtime FY2017
ACCOUNT NUMBER: 7-1284-421-00-280-064-7-131

SUBJECT: **Budget Amendments (Increases) in Accordance with Local Government Code, Chapter 111, Subchapter C**

Honorable Commissioners' Court of Hidalgo County:

I would like to request the following Amendments (increases) to my budget in accordance with Local Government Code, Chapter 111, Subchapter C

INCREASE OBJECT NUMBER(S)	ACCOUNT OBJECT NAME	AMOUNT
7-1284-421-00-280-064-7-131	Overtime Pay	8,000.00

	TOTAL APPROPRIATIONS	8,000.00
7-1284-331-11-280-064-7-000	Organized Crime Drug Enforcement Task Force (OCDETF).	8,000.00
	TOTAL REVENUES	8,000.00

REASON: **To appropriate budget for the overtime hours for officer assigned to OCDETF investigations (Number SW-TXS-1059).**

Funding period is June 01, 2017 to September 30, 2017.

Note: Expenses relating to fringe benefits for the overtime hours are to be charged to the Sheriff's Office Budget (Account #7-1100-421-00-280-001-0-XXX).

DEPARTMENT HEAD SIGNATURE

/ /
DATE

APPROVED COMMISSIONERS' COURT

ATTEST COUNTY CLERK

ORGANIZED CRIME DRUG ENFORCEMENT TASK FORCES

FY 2017 Agreement

FOR THE USE OF THE STATE OR LOCAL
OVERTIME AND AUTHORIZED EXPENSE/STRATEGIC INITIATIVE PROGRAM

Federal Tax Identification #: 74-6000717 DC#: S-32-

Amount Requested: $ 8,000.00

Number of Officers Listed: 1

OCDETF Investigation / Strategic Initiative Number: SW-TXS-1059

Operation Name: "Sorry Hank"

From: June 1, 2017 (Beginning Date of Agreement)

To: September 30, 2017 (Ending Date of Agreement)

Federal Agency Investigations: Number: M5-16-0032

State or Local Organization

Narcotics Supervisor: Captain Norbert Leal

Telephone Number: (956) 383-8114

E-mail Address: norbert.leal@hidalgoso.org

Fax # (if applicable): (956) 393-6179

State or Local Organization Name and Address:

Hidalgo County Sheriff's Office
711 El Cibolo Road
Edinburg, TX 78541

Sponsoring Federal Agency(ies):

DEA

Sponsoring Federal Agency Group/Squad Supervisor: Juan A. Trevino, GS

Telephone Number: (956) 992-8427

E-mail Address: Juan.a.trevino@usdoj.gov

Please provide the name, telephone number, e-mail address, and fax number for the **administrative or financial staff person at the State or Local Organization, who is directly responsible for the billing on the Reimbursement Request:**

Name: Itsayana Vallejo, Grant Accountant

Telephone Number: (956) 318-2511

E-mail Address: itsayana.vallejo@auditor.co.hidalgo.tx.us

Fax # (if applicable): (956) 318-2577

This Agreement is between the above named State or Local Law Enforcement Organization and the Organized Crime Drug Enforcement Task Forces (OCDETF) Program. This Agreement shall be effective when signed by an authorized State or Local Organization official, the sponsoring Federal Agency Special Agent-In-Charge, the sponsoring Agency Regional OCDETF Coordinator, the Assistant United States Attorney Regional OCDETF Director, and the OCDETF Executive Office.

1. It is agreed that the State or Local Law Enforcement officers named on this Agreement will assist in OCDETF Investigations, Strategic Initiatives and prosecutions as set forth in the Organized Crime Drug Enforcement Task Forces State or Local Overtime and Authorized Expense/Strategic Initiative Programs, Policies and Procedures Manual, Fiscal Year 2017.

2. No individual Agreement with a State or Local organization may exceed $25,000, and the cumulative amount of OCDETF State and Local overtime monies that may be expended on a single OCDETF Investigation or Strategic Initiative in a single fiscal year may not exceed $50,000 without express prior approval from the OCDETF Executive Office. The OCDETF Executive Office will entertain requests to exceed these funding levels in particular cases. Please submit a written request including justification approved by the AUSA Regional Director to the OCDETF Budget Officer/Deputy Budget Officer when seeking to exceed the above stated funding levels.

3. Each Reimbursable Agreement will be allowed no more than six (6) modifications per year. In addition, if the funds for a particular Agreement are completely deobligated with the intention of closing that Agreement, it will not count as a modification for purposes of this policy. These amendments must be transmitted by a memorandum approved and signed by the AUSA Regional OCDETF Director or designee for the region and sent to the OCDETF Executive Office.

4. If an Agreement does not have any activity during the last ninety (90) days, the funds shall automatically be deobligated. The OCDETF Executive Office will assist with the monitoring of the aging Agreements. Further, if a State or Local Organization indicates that it is no longer performing work under a particular Agreement, the State or Local Overtime and Authorized Expense/Strategic Initiative Programs, Policies and Procedures Manual requires that a modification memorandum identifying the amount to be deobligated be submitted to the OCDETF Executive Office as soon as possible after determining that no work is being performed.

5. The State or Local Law Enforcement Organization agrees to provide experienced drug Law Enforcement officers who are identified in this Agreement to work on the specified OCDETF Investigation or Strategic Initiative. Any change in Law Enforcement officers assigned must be agreed to by all approving officials.

6. Officers who are not deputized shall possess no Law Enforcement authority other than that conferred by virtue of their position as a commissioned officer of their parent Agency.

7. Officers who are deputized may possess Federal Law Enforcement authority as specified by the Agency affording the deputation.

8. Any State or Local officers assigned to an OCDETF Investigation or Strategic Initiative in accordance with this Agreement are not considered Federal employees and do not take on the benefits of Federal employment by virtue of their participation in the Investigation or Strategic Initiative.

9. OCDETF and the sponsoring Federal Law Enforcement Agency(ies) for the approved OCDETF Investigation or Strategic Initiative will provide to the assigned State or Local officers the clerical, operational and administrative support that is mutually agreed to by the parties in this Agreement.

10. Officers assigned to OCDETF Investigations or Strategic Initiatives should work full-time on the Investigation(s) or Strategic Initiative(s) in order to be paid overtime. In order to satisfy the "full-time" expectation, a Law Enforcement officer should work forty (40) hours per week or eight (8) hours per day on a single or multiple OCDETF Investigation(s) or Strategic Initiative(s). Any established exceptions or waivers to this definition shall be requested by the Regional Coordination Group and attached as Addendum A to the Agreement. [The parent State or Local Organization must pay the base salary of its officers. In the event officers must work overtime on an OCDETF Investigation or Strategic Initiative, the OCDETF Program will reimburse the parent State or Local Law Enforcement Organization for a limited amount of those overtime costs.] The Organization is responsible for paying its Law Enforcement officer(s) for their overtime, travel and per diem expenses. To ensure proper and complete utilization of OCDETF overtime and expense allocations, reimbursement claims must be submitted monthly on the OCDETF Reimbursement Request Form. The OCDETF Executive Office may refuse payment on any reimbursement request that is not submitted to the OCDETF Regional Coordination Group within thirty (30) days of the close of the month in which the overtime was worked.

11. It is the responsibility of the State or Local Organization to retain and have available for inspection sufficient supporting documentation for all regular hours and overtime hours worked towards a specific OCDETF case. Officers' timesheets must reflect work towards a specific OCDETF case and must be reviewed and signed by an authorized State or Local official.

12. Analysis of reimbursement claims by the Regional Coordination Group may result in a modification of the obligation of funds contained within this Agreement as well as the time period covered. The Organization affected by any such modification will receive a memo notifying them of the changes.

13. Overtime payments, including all other non-OCDETF Federal sources (such as Safe Streets, HIDTA, IRS, ICE, FEMA, etc.) may not, on an annual per person basis, exceed 25% of the current approved Federal salary rate in effect at the time the overtime is performed. The State or Local Organization is responsible for ensuring that this annual payment is not exceeded. The Executive Assistant/OCDETF Program Specialist will monitor these payments via MIS and communicate to the Federal Agency Regional OCDETF Coordinators who provide status updates to any officer approaching the threshold.

14. The overtime log must be attached to the reimbursement request when submitting the monthly invoices. The Sponsoring Federal Agency Supervisory Special Agent and the State or Local official authorized to approve the Reimbursement Request must certify that only authorized expenses are claimed, the regular hours requirement is satisfied, and that overtime has not exceeded 25% of the current Federal salary rate in effect at the time the overtime was worked.

15. Under no circumstances will the State or Local Organization charge any indirect costs for the administration or implementation of this Agreement.

16. The State or Local Organization shall maintain complete and accurate records and accounts of all obligations and expenditures of funds under this Agreement for a period of six (6) years and in accordance with generally accepted accounting principles to facilitate inspection and auditing of such records and accounts.

17. The State or Local Organization shall permit examination and auditing by representatives of the OCDETF Program, the sponsoring Federal Agency(ies), the U.S. Department of Justice, the Comptroller General of the United States, and/or any of their duly-authorized agents and representatives, of any and all records, documents, accounts, invoices, receipts, or expenditures relating to this Agreement. Failure to provide proper documentation will limit State or Local Law Enforcement Organizations from receiving OCDETF funding in the future.

18. The State or Local Organization will comply with Title VI of the Civil Rights Act of 1964 and all requirements applicable to OCDETF Agreements pursuant to the regulations of the Department of Justice (see, e.g., 28 C.F.R. Part 42, Subparts C and G; 28 C.F.R. 50.3 (1991)) relating to discrimination on the grounds of race, color, sex, age, national origin or handicap.

19. This Agreement may be terminated by any of the parties by written notice to the other parties ten (10) business days prior to termination. Billing for outstanding obligations shall be received by OCDETF within thirty (30) days of the notice of termination.

20. The Debt Collection Improvement Act of 1996 requires that most payments made by the Federal government, including vendor payments, must be made by electronic funds transfer (EFT). In accordance with the act, all OCDETF reimbursement payments will be issued via EFT. All participating State and Local Organizations must complete and submit the attached EFT form. The OCDETF Executive Office must receive one EFT form from each participating organization prior to processing their reimbursement payments. In certain circumstances the OCDETF Executive Office may make exceptions for Organizations that are unable to accept this form of payment, however, such Organizations must include written justification in the addendum of each new Agreement.

21. All changes made to the original Agreement must be approved by the OCDETF Executive Office and initialed by the Executive Assistant/OCDETF Program Specialist of the Regional Coordination Group making the revision. The AUSA Regional OCDETF Director or designee must initial all funding changes.

22. The Regional Coordination Group is responsible for identifying and implementing any additional policy requirements, as needed, for its specific region. Those regional policies will be documented in the Addendum B and attached to the approved Agreement. The Organizations are agreeing to adhere to these additional requirements and must have written approval by the Regional Coordination Group for any exceptions to the regional policies.

This Agreement is not a contract or obligation to commit Federal funds in the maximum amounts projected. Funding allocations for the time period set forth and agreed to herein represent projections only and are based upon consultation between the sponsoring Federal Agency and the State or Local Law Enforcement Organization. They are, therefore, subject to modification by OCDETF based upon the progress and needs of the OCDETF Investigation or Strategic Initiative. Additionally, resources are contingent upon the availability of funds per the approval and signature of the OCDETF Executive Office obligating authority. The OCDETF Executive Office will approve and certify that all the terms and conditions of the Agreement have been met.

Each Agreement must be approved and signed by a State or Local Law Enforcement Organization official who has supervisory authority over, and is authorized to assign, the participating Law Enforcement officers to the OCDETF Investigation or Strategic Initiative.

Approved By: _____

Authorized State or Local Official *Title* *Date*

Approved By: _____

Sponsoring Federal Agency Special Agent in Charge or Designee *Date*

Approved By: _____

Sponsoring Agency Regional OCDETF Coordinator *Date*

Approved By: _____

Assistant United States Attorney Regional OCDETF Director *Date*

Funds are encumbered for the State or Local Organization overtime costs and authorized expense/Strategic Initiative Programs specified above. **Subject to availability of funds.**

Funds Certified: _____

OCDETF Executive Office *Date*

Approving Official: _____

OCDETF Executive Office *Date*

ORGANIZED CRIME DRUG ENFORCEMENT TASK FORCES

STATE OR LOCAL LAW ENFORCEMENT OFFICERS ASSIGNED TO PARTICIPATE IN THE STATE AND LOCAL OVERTIME AND AUTHORIZED EXPENSE/STRATEGIC INITIATIVE PROGRAMS

State or Local Organization: Hidalgo County Sheriff's Office

OCDETF Investigation / Strategic Initiative Number: M5-16-0032/SW-TXS-1059

The Law Enforcement officers listed below will assist with the above identified OCDETF Investigation or Strategic Initiative. Any modification of the list of Law Enforcement officers must be agreed to in writing by all of the parties to this Agreement, made a part of the Agreement, and forwarded to the OCDETF Executive Office.

	NAME	TITLE/RANK	DOB
1.	Angelita Perez	Investigator	5/21/83
2.			
3.			
4.			
5.			
6.			
7.			
8.			
9.			
10.			

Addendum A

Definition of "Full-Time Participation" Exemption

Defination of "Full-Time Participation" Exemption

The Southwest Region Coordination Group includes in the definition of "full time participation" as the State/Local Enforcement Officer working the same hours on the assigned investigation (s) as that of the case agent. Some regular hours MUST be worked before overtime will be reimbursed.

Any Other Exceptions or Justifications

There may be exceptions granted for special circumstances for one-time events such as canine searches, aerial surveillance, etc. All special circumstances MUST be approved in writing via email by Regional Coordination Group prior to use. If special circumstances are NOT approved in advance, the exception will not be granted.

Any other exemptions must be pre-approved by the Regional Agency Coordinator.

Addendum B

Identification of Additional Policy Requirements

ACH VENDOR/MISCELLANEOUS PAYMENT ENROLLMENT FORM

PAYEE/COMPANY INFORMATION

Name: Hidalgo County Sheriff's Office	
Address: 100 E. Cano, 3rd Floor	
Edinburg, TX 78539	
Taxpayer ID Number: 746000717	
Contact Person Name: Norma Garcia	Telephone Number: (956) 318-2506

FINANCIAL INSTITUTION INFORMATION

Bank Name: Lone Star National Bank
Nine-Digit ABA Routing Transit Number: 114911687
Depositor Account Number: 71015647
Type of Account: (checking/savings) Checking

Please return with the Reimbursable Agreement

The Debt Collection Improvement Act of 1996 requires that most payments made by the Federal government, including vendor payments, must be made by electronic funds transfer (EFT). A benefit of receiving payments by EFT is that your funds are directly deposited to your account at a financial institution and are available to you on the date of payment.

If you have any question regarding the delivery of remittance information, please contact the financial institution (bank) where your account is held.

If you have any question on the completion of this form, please contact the OCDETF State and Local EFT Coordinator at 202-514-1860

To inquire about a bill please contact: https://www.ipp.gov/

AI-59925 **Sheriff's Office** **9. B.**

CC - REGULAR

Meeting Date: 05/30/2017

Submitted For: Joel Rivera, SHERIFF DEPT. **Submitted By:** Emilia Uriegas, SHERIFF DEPT.

Department: SHERIFF DEPT.

Information

CAPTION

Sheriff's Office OCDETF (1284):
1. Approval of Organized Crime Drug Enforcement Task Forces (OCDETF) Agreement between the Hidalgo County Sheriff's Office and the Drug Enforcement Administration McAllen District Office/Houston Division Office OCDETF Strike Force Group D-81.
2. Approval of certification of revenues as certified by the County Auditor for the OCDETF grant agreement.
3 . Approval to appropriate OCDETF grant award in the amount of $5,100.00 (in reference to Investigation Number SW-TXS-1059).

BACKGROUND

Funding is for the period of 06/30/17 to 09/30/17.

Fiscal Impact

CALENDAR YEAR: 2017 **ACCT. #:** 7-1284-421-00-280-037-7-XXX

FUNDS AVAILABLE Y/N?: Y **MATCHING FUNDS Y/N?:** N

BUDGETARY IMPACT:

Grant Fiscal Year: 2017
County Fiscal/Calendar Year: 2017
Account Fiscal Year: 7

Appropriation of funds in the amount of $5,100.00 for the OCDETF grant for leasing of vehicle and fuel expenses. Funding is for the period of 06/01/17 to 09/30/17.

Revenue Account #: 7-1284-331-11-280-037-7-000 - OCDETF

Attachments

agreement
budget.amendment
COR request

cor

Form Review

Inbox	Reviewed By	Date
Emilia Uriegas (Originator)	Emilia Uriegas	05/22/2017 05:35 PM
Budget & Management	Veronica Ortiz	05/23/2017 08:06 AM
Ivan Cantu	Ivan Cantu	05/23/2017 02:37 PM
Final Approval	Monica Salinas	05/26/2017 02:58 PM
Form Started By: Emilia Uriegas		Started On: 05/19/2017 12:35 PM
Final Approval Date: 05/26/2017		

ORGANIZED CRIME DRUG ENFORCEMENT TASK FORCES
FY 2017 Agreement
FOR USE OF OCDETF STRIKE FORCE/STRATEGIC INITIATIVE PROGRAMS

Federal Tax Identification #: 74-6000717 DC #: S-32-

Amount Requested
$ 5,100.00

From: June 1, 2017
Beginning Date of Agreement

To: September 30, 2017
Ending Date of Agreement

Strike Force/Strategic Initiative Name and Address:
DEA McAllen District Office
OCDETF Strike Force Group D81
1200 N Commerce Center
McAllen, TX 78501

Sponsoring Federal Agency (SF only): DEA

Lead Investigator: GS Juan A. Trevino

Telephone Number: (956) 992-8427

Email Address: juan.a.trevino@usdoj.gov

OCDETF Investigation/Strategic Initiative #:
SW-TXS-1059

Federal Agency Investigation #:
M5-16-0032

State or Local Agency Name and Address:
Hidalgo County Sherrif's Office
711 El Cibolo Road
Edinburg, TX 78540

State or Local Agency
Narcotics Supervisor: Captain Norbert Leal

Telephone Number: (956) 383-8114

E-mail Address: norbert.leal@hidalgoso.org

Fax Number: (956) 383-6179

Brief explanation of services/goods provided and basis for determining costs:
Leased vehicle and fuel needed to faciltate operational interface of the Hidalgo County Sherrif's Office with the McAllen DO Strike Force. The vehicle cost was determined based on current lease agreement between the HCSO and Enterprise. Other costs were based on current government pricing quotes.

Please provide the name, telephone number, and e-mail address for the administrative or financial staff person at the state or local agency, who is directly responsible for the billings under this Reimbursement Agreement:

Name: Itsayana Vallejo, Grant Accountant
Telephone Number: (956) 318-2511
E-mail Address: itsayana.vallejo@auditor.co.hidalgo.tx
Fax Number: (956) 318-2577

This agreement is between the above named state or local agency and the Organized Crime Drug Enforcement Task Force (OCDETF) Program. This agreement shall be effective when signed by a state or local law enforcement agency official, who is authorized to approve the expenditure of funds in support of OCDETF investigations, the Strike Force Commander or his/her designee (Strike Forces) or the OCDETF Regional Director (Strategic Initiatives) and the OCDETF Executive Office Budget Officer, or his/her designee.

1. This agreement is limited to the amount of funds stated on the cover page of the agreement and no reimbursements will be made in excess of this amount prior to written approval from the United States Attorney's Office and the OCDETF Executive Office. Any request for modification for the above funding amount or type equipment (if different or more than originally approved) must be justified in writing and approved prior to the expenditure of funds. Monitoring of overtime usage and the available authorized reimbursement balance is the responsibility of the sponsoring agency and the state and/or local party to the agreement.

2. It is agreed that the state or local agency named on this agreement will assist in OCDETF investigations, strategic initiatives, and/or prosecutions as set forth in the Organized Crime Drug Enforcement Task Force Strike Force/Strategic Initiative Programs and Policy and Procedures Manual, FY 2017.

3. An Agreement for the use of the OCDETF Strike Force/Strategic Initiative Programs ("Agreement") must be completed whenever state or local law enforcement agencies plan to seek reimbursement for permissible costs resulting from their participation in a Strike Force investigation/Strategic Initiative. Agreements are specific to a single OCDETF Strike Force investigation/Strategic Initiative. Each Agreement must be approved and signed by a state or local law enforcement organization official, who is authorized to approve the expenditure of funds in support of OCDETF investigations, the Strike Force Commander (Strike Forces) or Regional Director (Strategic Initiatives) and the OCDETF Executive Office. All required signatures must be obtained before the Agreement can be accepted and the funds obligated.

4. An agreement must fall within a fiscal year period (October 1 – September 30). State and local agencies must use an accurate "Beginning Date of Agreement" (Not always October 1). An agreement can never be dated before the investigation was approved as an OCDETF case.

5. If an Agreement does not have any activity during the last ninety (90) days from the last time a bill has been submitted or during the first ninety (90) days from the date the Agreement was signed, the funds shall be deobligated. Further, if a state or local agency determines that it is no longer performing work under a particular Agreement, a modification memorandum identifying the amount to be deobligated will be submitted by the Strike Force Commander or Regional Director to the OCDETF Executive Office as soon as possible.

6. A listing of costs that will be reimbursed by the Strike Force/Strategic Initiative Programs will be attached to each agreement. The total cost listed on the Cost Estimate Sheet should match the Amount Requested on the Agreement Cover Page. This must be a detailed listing of each expense expected to be purchased under the Agreement. For example, simply listing "Equipment" or "Surveillance Equipment" is not acceptable. In this example, all equipment should be listed separately such as binoculars, cameras, camera mounts, etc. Each expense listed on the cost estimate sheet must also have a price quote submitted with the Agreement to verify the accuracy of the cost estimates.

7. The Strike Force Commander (Strike Forces) or Regional Director (Strategic Initiative) must ensure that the cumulative authorized expense commitments do not exceed the total Strike Force/Strategic Initiative fund allocation.

8. Reimbursement for any expenditure above the Agreement amount must be approved by both the Strike Force Commander (Strike Forces) or Regional Director (Strategic Initiative) and the OCDETF Executive Office.

9. All approving officials must agree to amendments or changes to the amount of the Agreement, the listing of eligible items to be reimbursed, and associated estimates that occur after an Agreement has been executed. These amendments or changes must be transmitted by a memorandum approved and signed by the Strike Force Commander (Strike Forces) or Regional Director (Strategic Initiatives), and forwarded to the OCDETF Executive Office. All changes made to the original agreement must be approved and initialed by the person making the revision and the Strike Force Commander (Strike Forces) or Regional Director (Strategic Initiatives).

10. This agreement may be terminated by any of the parties by written notice to the other parties ten (10) business days prior to termination. Billing for outstanding obligations shall be received by OCDETF within thirty (30) days of the notice of termination.

11. Costs incurred pursuant to an OCDETF investigation or due to participation in an OCDETF Strategic Initiative by a state and local program participant, including informant fees, purchase of evidence, travel, either by a state or local officer, witness or confidential source; rental of automobiles; cost of interpreters or translators; training in support of OCDETF; technical surveillance equipment; rental of office space for temporary use, such as an off-site location for electronic monitoring or off-site command post, may be reimbursed by OCDETF under certain circumstances.

12. Rental payments cannot be paid in advance and must be paid in arrears. Reimbursable Requests with rent included are due on the first workday of each month, and must be for the month that just ended rather than the month beginning. For example, reimbursement for rental space incurred in February cannot take place before March 1st. Any exceptions or additions to the approved reimbursable costs listed above must be detailed and attached in Addendum A of the Agreement.

13. Property and equipment purchased through the OCDETF Program must remain available to the Strike Force/Strategic Initiative for the duration of its existence. The reimbursement of these items must be permissible under the AFF statute, Section 524 (c)(1)(l) of Title 28, United States Code, and this guidance, and are subject to the availability of funds.

14. Subsequent to payment of invoices by the state and local organization to a third party vendor, OCDETF will reimburse the organization for approved investigation or initiative related equipment and service costs. Claims must be submitted monthly on the OCDETF Reimbursement Request Form.

15. State and local organizations must provide official procurement documents to support all reimbursable expenditures to the Strike Force Commander (Strike Forces) or Regional Director (Strategic Initiatives). If proper supporting documentation is not available, OCDETF will not make reimbursement payments. The cumulative amount of all reimbursements cannot exceed the agreement amount without proper modification.

16. The state or local organization shall permit examination and auditing by representatives of the OCDETF Program, the sponsoring Federal agencies, DOJ, the Comptroller General of the United States, and/or any of their duly-authorized agents and representatives, of all records, documents, accounts, invoices, receipts, or expenditures relating to this agreement. In addition, the state or local agency will maintain all such foregoing reports and records until all audits and examinations are completed and resolved, or for a period of six (6) years after termination of this Agreement, whichever is later. Failure to provide proper documentation will limit State or Local law enforcement organizations from receiving OCDETF funding in the future.

17. The state or local organization will comply with Title VI of the Civil Rights Act of 1964 and all requirements applicable to OCDETF agreements pursuant to the regulations of the Department of Justice (see, e.g., 28 C.F.R. Part 42, Subparts C and G; 28 C.F.R. 50.3 (1991)) relating to discrimination on the grounds of race, color, sex, age, national origin or handicap.

18. Electronic Funds Transfer Process

    a) The Debt Collection Improvement Act of 1996 requires that most payments made by the Federal government, including vendor payments, must be made by electronic funds transfer (EFT). All participating State and Local agencies must complete and submit the attached ACH vendor enrollment form. The OCDETF Executive Office must receive one ACH form from each participating agency or police department prior to processing their reimbursement payments.

This agreement is not a contract or obligation to commit Federal funds in the maximum amounts projected. Funding allocations for the time period set forth, agreed to herein represent projections only, and are based upon consultation between the Strike Force or Regional Director and the state or local law enforcement organization. They are, therefore, subject to modification by OCDETF based upon the progress and needs of the OCDETF investigation. Additionally, resources are contingent upon the availability of funds per the approval and signature of the OCDETF Executive Office obligating authority. The OCDETF Executive Office will approve and certify that all the terms and conditions of the agreement have been met.

Approved By: _____
Authorized State or Local Official *Title* *Date*

Approved By: _____
Strike Force Commander (SF) /Regional Director (SI) *Date*

Funds are encumbered for the costs specified above, **subject to the availability of funds**.

Funds Certified: _____
OCDETF Executive Office *Date*

Approving Official: _____
OCDETF Executive Office *Date*

ORGANIZED CRIME DRUG ENFORCEMENT TASK FORCES

STRIKE FORCE/STRATEGIC INITIATIVE AGREEMENT
COST ESTIMATE

Name of Strike Force/Strategic Initiative: M5-16-0032

OCDETF Investigation/Strategic Initiative Number: SW-TXS-1059

The following is an estimate of operational costs expected to be incurred by state and local law enforcement in an OCDETF Strike Force investigation or Strategic Initiative. These costs are reimbursable under this agreement, subject to the availability of funds.

	DESCRIPTION	AMOUNT
1.	Leased Vehicle @ $900 x 4 months	$ 3,600.00
2.	Fuel	$ 1,500.00
3.	TOTAL:	$ 5,100.00
4.		
5.		
6.		
7.		
8.		
9.		
10.		
11.		
12.		
13.		

Addendum A

Exception to EFT Policy Justification:

The McAllen District Office Strike Force Group D81 is requesting the following which will be utilized by the McAllen District Office/Strike Force Group D81. 9fy'2017)

Other Exceptions or Justifications:

ACH VENDOR/MISCELLANEOUS PAYMENT
ENROLLMENT FORM

PAYEE/COMPANY INFORMATION (State & Local Agency name and address must match Agreement cover sheet)

Name: Hidalgo County Sherrif's Office	
Address: 100 E. Cano, 3rd Floor	
Edinburg, TX 78539	
Taxpayer ID Number: 746000717	
Contact Person Name: Norma Garcia	Telephone Number: (956) 318-2506

FINANCIAL INSTITUTION INFORMATION

Bank Name: Lone Star National Bank
Nine-Digit ABA Routing Transit Number: 114911687
Depositor Account Number: 71015647
Type of Account: (checking/savings) Checking

Please return with the Reimbursable Agreement

The Debt Collection Improvement Act of 1996 requires that most payments made by the Federal government, including vendor payments, must be made by electronic funds transfer (EFT). A benefit of receiving payments by EFT is that your funds are directly deposited to your account at a financial institution and are available to you on the date of payment.

If you have any question regarding the delivery of remittance information, please contact the financial institution (bank) where your account is held.

If you have any question on the completion of this form, please contact the OCDETF State and Local EFT Coordinator at 202-514-1860

To inquire about a bill please contact: https://www.ipp.gov/

DATE: May 19, 2017
DEPARTMENT HEAD: Sheriff J.E. "Eddie" Guerra
DEPARTMENT NAME: OCDETF FY2017 Vehicle Lease/Fuel
ACCOUNT NUMBER: 7-1284-421-00-280-037-7-XXX

SUBJECT: **Budget Amendments (Increases) in Accordance with Local Government Code, Chapter 111, Subchapter C**

Honorable Commissioners' Court of Hidalgo County:

I would like to request the following Amendments (increases) to my budget in accordance with Local Government Code, Chapter 111, Subchapter C

INCREASE OBJECT NUMBER'S)	ACCOUNT OBJECT NAME	AMOUNT
7-1284-421-00-280-037-7-442	Equipment and Vehicle Rentals	3,600.00
7-1284-421-00-280-037-7-626	Gasoline	1,500.00
	TOTAL APPROPRIATIONS	5,100.00
7-1284-331-11-280-037-7-000	Organized Crime Drug Enforcement Task Force (OCDETF)	5,100.00
	TOTAL REVENUES	5,100.00

REASON: **To appropriate budget for leasing of vehicle and fuel for officer assigned to OCDETF investigations (Number SW-TXS-1059).**

DEPARTMENT HEAD SIGNATURE

/ /
DATE

APPROVED COMMISSIONERS' COURT

ATTEST COUNTY CLERK

Emilia Uriegas

From: Emilia Uriegas <emilia.uriegas@hidalgoso.org>
Sent: Monday, May 22, 2017 5:13 PM
To: 'ray.eufracio@auditor.co.hidalgo.tx.us'; 'linda.fong@auditor.co.hidalgo.tx.us'
Cc: itsayana.vallejo@auditor.co.hidalgo.tx.us
Subject: Certification of Revenues ($5,100)
Attachments: OCDETF FY2017 $5,100.pdf

Mr. Eufracio:

This is to formally request the certification of revenues for $5,100.00 in regards to the OCDETF vehicle leasing and fuel agreement (AI #59925). I will be requesting that the item be placed on CC agenda of 05/30/17.

Should you have any question or concerns, feel free to contact me.

Thank you.

Emilia Uriegas
Budget Manager II
Hidalgo County Sheriff's Office
956-393-6028

AI-59925 **Sheriff's Office**

CC - REGULAR

Meeting Date: 06/13/2017

Submitted For: Joel Rivera, SHERIFF DEPT. **Submitted By:** Emilia Uriegas, SHERIFF DEPT.

Department: SHERIFF DEPT.

Information

CAPTION

Sheriff's Office OCDETF (1284):
1. Approval of Organized Crime Drug Enforcement Task Forces (OCDETF) Agreement between the Hidalgo County Sheriff's Office and the Drug Enforcement Administration McAllen District Office/Houston Division Office OCDETF Strike Force Group D-81.
2. Approval of certification of revenues as certified by the County Auditor for the OCDETF grant agreement.
3 . Approval to appropriate OCDETF grant award in the amount of $5,100.00 (in reference to Investigation Number SW-TXS-1059).

BACKGROUND

Funding is for the period of 06/30/17 to 09/30/17.

Fiscal Impact

CALENDAR YEAR: 2017 **ACCT. #:** 7-1284-421-00-280-037-7-XXX

FUNDS AVAILABLE Y/N?: Y **MATCHING FUNDS Y/N?:** N

BUDGETARY IMPACT:

Grant Fiscal Year: 2017
County Fiscal/Calendar Year: 2017
Account Fiscal Year: 7

Appropriation of funds in the amount of $5,100.00 for the OCDETF grant for leasing of vehicle and fuel expenses. Funding is for the period of 06/01/17 to 09/30/17.

Revenue Account #: 7-1284-331-11-280-037-7-000 - OCDETF

Attachments

agreement
budget.amendment

Form Review

Inbox	Reviewed By	Date
	Emilia Uriegas	05/19/2017 12:35 PM

Form Started By: Emilia Uriegas Started On: 05/19/2017 12:35 PM

ORGANIZED CRIME DRUG ENFORCEMENT TASK FORCES
FY 2017 Agreement
FOR USE OF OCDETF STRIKE FORCE/STRATEGIC INITIATIVE PROGRAMS

Federal Tax Identification #: 74-6000717 DC #: S-32-

Amount Requested
$ 5,100.00

From: June 1, 2017
Beginning Date of Agreement

To: September 30, 2017
Ending Date of Agreement

Strike Force/Strategic Initiative Name and Address:
DEA McAllen District Office
OCDETF Strike Force Group D81
1200 N Commerce Center
McAllen, TX 78501

Sponsoring Federal Agency (SF only): DEA

Lead Investigator: GS Juan A. Trevino

Telephone Number: (956) 992-8427

Email Address: juan.a.trevino@usdoj.gov

OCDETF Investigation/Strategic Initiative #:
SW-TXS-1059

Federal Agency Investigation #:
M5-16-0032

State or Local Agency Name and Address:
Hidalgo County Sherrif's Office
711 El Cibolo Road
Edinburg, TX 78540

State or Local Agency
Narcotics Supervisor: Captain Norbert Leal

Telephone Number: (956) 383-8114

E-mail Address: norbert.leal@hidalgoso.org

Fax Number: (956) 383-6179

Brief explanation of services/goods provided and basis for determining costs:
Leased vehicle and fuel needed to faciltate operational interface of the Hidalgo County Sherrif's Office with the McAllen DO Strike Force. The vehicle cost was determined based on current lease agreement between the HCSO and Enterprise. Other costs were based on current government pricing quotes.

Please provide the name, telephone number, and e-mail address for the administrative or financial staff person at the state or local agency, who is directly responsible for the billings under this Reimbursement Agreement:

Name: Itsayana Vallejo, Grant Accountant
Telephone Number: (956) 318-2511
E-mail Address: itsayana.vallejo@auditor.co.hidalgo.tx
Fax Number: (956) 318-2577

This agreement is between the above named state or local agency and the Organized Crime Drug Enforcement Task Force (OCDETF) Program. This agreement shall be effective when signed by a state or local law enforcement agency official, who is authorized to approve the expenditure of funds in support of OCDETF investigations, the Strike Force Commander or his/her designee (Strike Forces) or the OCDETF Regional Director (Strategic Initiatives) and the OCDETF Executive Office Budget Officer, or his/her designee.

1. This agreement is limited to the amount of funds stated on the cover page of the agreement and no reimbursements will be made in excess of this amount prior to written approval from the United States Attorney's Office and the OCDETF Executive Office. Any request for modification for the above funding amount or type equipment (if different or more than originally approved) must be justified in writing and approved prior to the expenditure of funds. Monitoring of overtime usage and the available authorized reimbursement balance is the responsibility of the sponsoring agency and the state and/or local party to the agreement.

2. It is agreed that the state or local agency named on this agreement will assist in OCDETF investigations, strategic initiatives, and/or prosecutions as set forth in the Organized Crime Drug Enforcement Task Force Strike Force/Strategic Initiative Programs and Policy and Procedures Manual. FY 2017.

3. An Agreement for the use of the OCDETF Strike Force/Strategic Initiative Programs ("Agreement") must be completed whenever state or local law enforcement agencies plan to seek reimbursement for permissible costs resulting from their participation in a Strike Force investigation/Strategic Initiative. Agreements are specific to a single OCDETF Strike Force investigation/Strategic Initiative. Each Agreement must be approved and signed by a state or local law enforcement organization official, who is authorized to approve the expenditure of funds in support of OCDETF investigations, the Strike Force Commander (Strike Forces) or Regional Director (Strategic Initiatives) and the OCDETF Executive Office. All required signatures must be obtained before the Agreement can be accepted and the funds obligated.

4. An agreement must fall within a fiscal year period (October 1 – September 30). State and local agencies must use an accurate "Beginning Date of Agreement" (Not always October 1). An agreement can never be dated before the investigation was approved as an OCDETF case.

5. If an Agreement does not have any activity during the last ninety (90) days from the last time a bill has been submitted or during the first ninety (90) days from the date the Agreement was signed, the funds shall be deobligated. Further, if a state or local agency determines that it is no longer performing work under a particular Agreement, a modification memorandum identifying the amount to be deobligated will be submitted by the Strike Force Commander or Regional Director to the OCDETF Executive Office as soon as possible.

6. A listing of costs that will be reimbursed by the Strike Force/Strategic Initiative Programs will be attached to each agreement. The total cost listed on the Cost Estimate Sheet should match the Amount Requested on the Agreement Cover Page. This must be a detailed listing of each expense expected to be purchased under the Agreement. For example, simply listing "Equipment" or "Surveillance Equipment" is not acceptable. In this example, all equipment should be listed separately such as binoculars, cameras, camera mounts, etc. Each expense listed on the cost estimate sheet must also have a price quote submitted with the Agreement to verify the accuracy of the cost estimates.

7. The Strike Force Commander (Strike Forces) or Regional Director (Strategic Initiative) must ensure that the cumulative authorized expense commitments do not exceed the total Strike Force/Strategic Initiative fund allocation.

8. Reimbursement for any expenditure above the Agreement amount must be approved by both the Strike Force Commander (Strike Forces) or Regional Director (Strategic Initiative) and the OCDETF Executive Office.

9. All approving officials must agree to amendments or changes to the amount of the Agreement, the listing of eligible items to be reimbursed, and associated estimates that occur after an Agreement has been executed. These amendments or changes must be transmitted by a memorandum approved and signed by the Strike Force Commander (Strike Forces) or Regional Director (Strategic Initiatives), and forwarded to the OCDETF Executive Office. All changes made to the original agreement must be approved and initialed by the person making the revision and the Strike Force Commander (Strike Forces) or Regional Director (Strategic Initiatives).

10. This agreement may be terminated by any of the parties by written notice to the other parties ten (10) business days prior to termination. Billing for outstanding obligations shall be received by OCDETF within thirty (30) days of the notice of termination.

11. Costs incurred pursuant to an OCDETF investigation or due to participation in an OCDETF Strategic Initiative by a state and local program participant, including informant fees, purchase of evidence, travel, either by a state or local officer, witness or confidential source; rental of automobiles; cost of interpreters or translators; training in support of OCDETF; technical surveillance equipment; rental of office space for temporary use, such as an off-site location for electronic monitoring or off-site command post, may be reimbursed by OCDETF under certain circumstances.

12. Rental payments cannot be paid in advance and must be paid in arrears. Reimbursable Requests with rent included are due on the first workday of each month, and must be for the month that just ended rather than the month beginning. For example, reimbursement for rental space incurred in February cannot take place before March 1st. Any exceptions or additions to the approved reimbursable costs listed above must be detailed and attached in Addendum A of the Agreement.

13. Property and equipment purchased through the OCDETF Program must remain available to the Strike Force/Strategic Initiative for the duration of its existence. The reimbursement of these items must be permissible under the AFF statute, Section 524 (c)(1)(l) of Title 28, United States Code, and this guidance, and are subject to the availability of funds.

14. Subsequent to payment of invoices by the state and local organization to a third party vendor, OCDETF will reimburse the organization for approved investigation or initiative related equipment and service costs. Claims must be submitted monthly on the OCDETF Reimbursement Request Form.

15. State and local organizations must provide official procurement documents to support all reimbursable expenditures to the Strike Force Commander (Strike Forces) or Regional Director (Strategic Initiatives). If proper supporting documentation is not available, OCDETF will not make reimbursement payments. The cumulative amount of all reimbursements cannot exceed the agreement amount without proper modification.

16. The state or local organization shall permit examination and auditing by representatives of the OCDETF Program, the sponsoring Federal agencies, DOJ, the Comptroller General of the United States, and/or any of their duly-authorized agents and representatives, of all records, documents, accounts, invoices, receipts, or expenditures relating to this agreement. In addition, the state or local agency will maintain all such foregoing reports and records until all audits and examinations are completed and resolved, or for a period of six (6) years after termination of this Agreement, whichever is later. Failure to provide proper documentation will limit State or Local law enforcement organizations from receiving OCDETF funding in the future.

17. The state or local organization will comply with Title VI of the Civil Rights Act of 1964 and all requirements applicable to OCDETF agreements pursuant to the regulations of the Department of Justice (see, e.g., 28 C.F.R. Part 42, Subparts C and G; 28 C.F.R. 50.3 (1991)) relating to discrimination on the grounds of race, color, sex, age, national origin or handicap.

18. Electronic Funds Transfer Process

    a) The Debt Collection Improvement Act of 1996 requires that most payments made by the Federal government, including vendor payments, must be made by electronic funds transfer (EFT). All participating State and Local agencies must complete and submit the attached ACH vendor enrollment form. The OCDETF Executive Office must receive one ACH form from each participating agency or police department prior to processing their reimbursement payments.

This agreement is not a contract or obligation to commit Federal funds in the maximum amounts projected. Funding allocations for the time period set forth, agreed to herein represent projections only, and are based upon consultation between the Strike Force or Regional Director and the state or local law enforcement organization. They are, therefore, subject to modification by OCDETF based upon the progress and needs of the OCDETF investigation. Additionally, resources are contingent upon the availability of funds per the approval and signature of the OCDETF Executive Office obligating authority. The OCDETF Executive Office will approve and certify that all the terms and conditions of the agreement have been met.

Approved By: _____
Authorized State or Local Official *Title* *Date*

Approved By: _____
Strike Force Commander (SF) /Regional Director (SI) *Date*

Funds are encumbered for the costs specified above, **subject to the availability of funds**.

Funds Certified: _____
OCDETF Executive Office *Date*

Approving Official: _____
OCDETF Executive Office *Date*

ORGANIZED CRIME DRUG ENFORCEMENT TASK FORCES

STRIKE FORCE/STRATEGIC INITIATIVE AGREEMENT
COST ESTIMATE

Name of Strike Force/Strategic Initiative: M5-16-0032

OCDETF Investigation/Strategic Initiative Number: SW-TXS-1059

The following is an estimate of operational costs expected to be incurred by state and local law enforcement in an OCDETF Strike Force investigation or Strategic Initiative. These costs are reimbursable under this agreement, subject to the availability of funds.

	DESCRIPTION	AMOUNT
1.	Leased Vehicle @ $900 x 4 months	$ 3,600.00
2.	Fuel	$ 1,500.00
3.	TOTAL:	$ 5,100.00
4.		
5.		
6.		
7.		
8.		
9.		
10.		
11.		
12.		
13.		

Addendum A

Exception to EFT Policy Justification:

The McAllen District Office Strike Force Group D81 is requesting the following which will be utilized by the McAllen District Office/Strike Force Group D81. 9fy'2017)

Other Exceptions or Justifications:

ACH VENDOR/MISCELLANEOUS PAYMENT
ENROLLMENT FORM

PAYEE/COMPANY INFORMATION (State & Local Agency name and address must match Agreement cover sheet)

Name: Hidalgo County Sherrif's Office	
Address: 100 E. Cano, 3rd Floor	
Edinburg, TX 78539	
Taxpayer ID Number: 746000717	
Contact Person Name: Norma Garcia	Telephone Number: (956) 318-2506

FINANCIAL INSTITUTION INFORMATION

Bank Name: Lone Star National Bank
Nine-Digit ABA Routing Transit Number: 114911687
Depositor Account Number: 71015647
Type of Account: (checking/savings) Checking

Please return with the Reimbursable Agreement

The Debt Collection Improvement Act of 1996 requires that most payments made by the Federal government, including vendor payments, must be made by electronic funds transfer (EFT). A benefit of receiving payments by EFT is that your funds are directly deposited to your account at a financial institution and are available to you on the date of payment.

If you have any question regarding the delivery of remittance information, please contact the financial institution (bank) where your account is held.

If you have any question on the completion of this form, please contact the OCDETF State and Local EFT Coordinator at 202-514-1860

To inquire about a bill please contact: https://www.ipp.gov/

DATE: May 19, 2017
DEPARTMENT HEAD: Sheriff J.E. "Eddie" Guerra
DEPARTMENT NAME: OCDETF FY2017 Vehicle Lease/Fuel
ACCOUNT NUMBER: 7-1284-421-00-280-037-7-XXX

SUBJECT: **Budget Amendments (Increases) in Accordance with Local Government Code, Chapter 111, Subchapter C**

Honorable Commissioners' Court of Hidalgo County:

I would like to request the following Amendments (increases) to my budget in accordance with Local Government Code, Chapter 111, Subchapter C

INCREASE OBJECT NUMBER'S)	ACCOUNT OBJECT NAME	AMOUNT
7-1284-421-00-280-037-7-442	Equipment and Vehicle Rentals	3,600.00
7-1284-421-00-280-037-7-626	Gasoline	1,500.00

	TOTAL APPROPRIATIONS	5,100.00
7-1284-331-11-280-037-7-000	Organized Crime Drug Enforcement Task Force (OCDETF)	5,100.00
	TOTAL REVENUES	5,100.00

REASON: **To appropriate budget for leasing of vehicle and fuel for officer assigned to OCDETF investigations (Number SW-TXS-1059).**

DEPARTMENT HEAD SIGNATURE

/ /
DATE

APPROVED COMMISSIONERS' COURT

ATTEST COUNTY CLERK

COUNTY of HIDALGO



EDINBURG, TEXAS 78539

HIDALGO COUNTY AUDITOR'S OFFICE
Hidalgo County Administration Building
2808 South Business Highway 281
Edinburg, Texas 78539-6243
PHONE: (956) 318-2511
FAX: (956) 318-2577
WEBSITE: www.co.hidalgo.tx.us/auditor

May 30, 2017

The Honorable Ramon Garcia, Hidalgo County Judge
The Honorable David Fuentes, Commissioner, Precinct No. 1
The Honorable Eduardo "Eddie" Cantu, Commissioner, Precinct No. 2
The Honorable Jose M. Flores, Commissioner, Precinct No. 3
The Honorable Joseph Palacios, Commissioner, Precinct No. 4

RE: Certification of Revenue

Dear Judge and Commissioners:

Pursuant to Local Government Code § 111.0706 SPECIAL BUDGET FOR GRANT OR AID MONEY:

> The county auditor shall certify to the commissioner's court the receipt of all public or private grant or aid money that is available for disbursement in a fiscal year but not included in the budget for that fiscal year. On certification, the court shall adopt a special budget for the limited purpose of spending the grant or aid money for its intended purpose.

I, Ray Eufracio, County Auditor of Hidalgo County, certify to the Hidalgo County Commissioners Court the receipt of an award from the Organized Crime Drug Enforcement Task Force (OCDETF). These funds may now be made available by creating a new special budget or amending a current budget for its intended purposes.

AMOUNT	PURPOSE
$5,100.00	SW-TXS-1059 Leased Vehicle / Fuel Organized Crime Drug Enforcement Task Force

CERTIFIED BY:

Raymundo Eufracio, CPA
Hidalgo County Auditor

5/30/17
Date

HIDALGO COUNTY DISTRICT JUDGES

LUIS M. SINGLETERRY JUDGE, 92ND D.C. | RODOLFO DELGADO JUDGE, 93RD D.C. | J. R. "BOBBY" FLORES JUDGE, 139TH D.C. | ROSE GUERRA REYNA JUDGE, 206TH D.C. | JUAN R. PARTIDA JUDGE, 275TH D.C. | MARIO E. RAMIREZ, JR. JUDGE, 332ND D.C. | NOE GONZALEZ JUDGE, 370TH D.C. OVERSEER | LETICIA LOPEZ JUDGE, 389TH D.C. | AIDA SALINAS FLORES JUDGE, 398TH D.C. | ISRAEL RAMON, JR. JUDGE, 430TH D.C. | JESSE CONTRERAS JUDGE, 449TH D.C.

AI-59925 **Sheriff's Office** **9. B.**

CC - REGULAR

Meeting Date: 05/30/2017

Submitted For: Joel Rivera, SHERIFF DEPT. **Submitted By:** Emilia Uriegas, SHERIFF DEPT.

Department: SHERIFF DEPT.

Information

CAPTION

Sheriff's Office OCDETF (1284):
1. Approval of Organized Crime Drug Enforcement Task Forces (OCDETF) Agreement between the Hidalgo County Sheriff's Office and the Drug Enforcement Administration McAllen District Office/Houston Division Office OCDETF Strike Force Group D-81.
2. Approval of certification of revenues as certified by the County Auditor for the OCDETF grant agreement.
3 . Approval to appropriate OCDETF grant award in the amount of $5,100.00 (in reference to Investigation Number SW-TXS-1059).

BACKGROUND

Funding is for the period of 06/30/17 to 09/30/17.

Fiscal Impact

CALENDAR YEAR: 2017 **ACCT. #:** 7-1284-421-00-280-037-7-XXX

FUNDS AVAILABLE Y/N?: Y **MATCHING FUNDS Y/N?:** N

BUDGETARY IMPACT:

Grant Fiscal Year: 2017
County Fiscal/Calendar Year: 2017
Account Fiscal Year: 7

Appropriation of funds in the amount of $5,100.00 for the OCDETF grant for leasing of vehicle and fuel expenses. Funding is for the period of 06/01/17 to 09/30/17.

Revenue Account #: 7-1284-331-11-280-037-7-000 - OCDETF

Attachments

agreement
budget.amendment
COR request

Form Review

Inbox	Reviewed By	Date
Emilia Uriegas (Originator)	Emilia Uriegas	05/22/2017 05:35 PM
Budget & Management	Veronica Ortiz	05/23/2017 08:06 AM
Ivan Cantu	Ivan Cantu	05/23/2017 02:37 PM
Final Approval		
Form Started By: Emilia Uriegas		Started On: 05/19/2017 12:35 PM

Itsayana Vallejo

From: Emilia Uriegas [emilia.uriegas@hidalgoso.org]
Sent: Monday, May 22, 2017 5:13 PM
To: ray.eufracio@auditor.co.hidalgo.tx.us; linda.fong@auditor.co.hidalgo.tx.us
Cc: itsayana.vallejo@auditor.co.hidalgo.tx.us
Subject: Certification of Revenues ($5,100)
Attachments: OCDETF FY2017 $5,100.pdf

Mr. Eufracio:

This is to formally request the certification of revenues for $5,100.00 in regards to the OCDETF vehicle leasing and fuel agreement (AI #59925). I will be requesting that the item be placed on CC agenda of 05/30/17.

Should you have any question or concerns, feel free to contact me.

Thank you.

Emilia Uriegas
Budget Manager II
Hidalgo County Sheriff's Office
956-393-6028

ORGANIZED CRIME DRUG ENFORCEMENT TASK FORCES
FY 2017 Agreement
FOR USE OF OCDETF STRIKE FORCE/STRATEGIC INITIATIVE PROGRAMS

Federal Tax Identification #: 74-6000717 DC #: S-32-

Amount Requested
$ 5,100.00

From: June 1, 2017
Beginning Date of Agreement

To: September 30, 2017
Ending Date of Agreement

Strike Force/Strategic Initiative Name and Address:
DEA McAllen District Office
OCDETF Strike Force Group D81
1200 N Commerce Center
McAllen, TX 78501

Sponsoring Federal Agency (SF only): DEA

Lead Investigator: GS Juan A. Trevino

Telephone Number: (956) 992-8427

Email Address: juan.a.trevino@usdoj.gov

OCDETF Investigation/Strategic Initiative #:
SW-TXS-1059

Federal Agency Investigation #:
M5-16-0032

State or Local Agency Name and Address:
Hidalgo County Sherrif's Office
711 El Cibolo Road
Edinburg, TX 78540

State or Local Agency
Narcotics Supervisor: Captain Norbert Leal

Telephone Number: (956) 383-8114

E-mail Address: norbert.leal@hidalgoso.org

Fax Number: (956) 383-6179

Brief explanation of services/goods provided and basis for determining costs:
Leased vehicle and fuel needed to faciltate operational interface of the Hidalgo County Sherrif's Office with the McAllen DO Strike Force. The vehicle cost was determined based on current lease agreement between the HCSO and Enterprise. Other costs were based on current government pricing quotes.

Please provide the name, telephone number, and e-mail address for the administrative or financial staff person at the state or local agency, who is directly responsible for the billings under this Reimbursement Agreement:

Name: Itsayana Vallejo, Grant Accountant
Telephone Number: (956) 318-2511
E-mail Address: itsayana.vallejo@auditor.co.hidalgo.tx
Fax Number: (956) 318-2577

DATE: May 19, 2017
DEPARTMENT HEAD: Sheriff J.E. "Eddie" Guerra
DEPARTMENT NAME: OCDETF FY2017 Vehicle Lease/Fuel
ACCOUNT NUMBER: 7-1284-421-00-280-037-7-XXX

SUBJECT: **Budget Amendments (Increases) in Accordance with Local Government Code, Chapter 111, Subchapter C**

Honorable Commissioners' Court of Hidalgo County:

I would like to request the following Amendments (increases) to my budget in accordance with Local Government Code, Chapter 111, Subchapter C

INCREASE OBJECT NUMBER'S)	ACCOUNT OBJECT NAME	AMOUNT
7-1284-421-00-280-037-7-442	Equipment and Vehicle Rentals	3,600.00
7-1284-421-00-280-037-7-626	Gasoline	1,500.00
	TOTAL APPROPRIATIONS	5,100.00
7-1284-331-11-280-037-7-000	Organized Crime Drug Enforcement Task Force (OCDETF)	5,100.00
	TOTAL REVENUES	5,100.00

REASON: To appropriate budget for leasing of vehicle and fuel for officer assigned to OCDETF investigations (Number SW-TXS-1059).

DEPARTMENT HEAD SIGNATURE

/ /
DATE

APPROVED COMMISSIONERS' COURT

ATTEST COUNTY CLERK

This agreement is between the above named state or local agency and the Organized Crime Drug Enforcement Task Force (OCDETF) Program. This agreement shall be effective when signed by a state or local law enforcement agency official, who is authorized to approve the expenditure of funds in support of OCDETF investigations, the Strike Force Commander or his/her designee (Strike Forces) or the OCDETF Regional Director (Strategic Initiatives) and the OCDETF Executive Office Budget Officer, or his/her designee.

1. This agreement is limited to the amount of funds stated on the cover page of the agreement and no reimbursements will be made in excess of this amount prior to written approval from the United States Attorney's Office and the OCDETF Executive Office. Any request for modification for the above funding amount or type equipment (if different or more than originally approved) must be justified in writing and approved prior to the expenditure of funds. Monitoring of overtime usage and the available authorized reimbursement balance is the responsibility of the sponsoring agency and the state and/or local party to the agreement.

2. It is agreed that the state or local agency named on this agreement will assist in OCDETF investigations, strategic initiatives, and/or prosecutions as set forth in the Organized Crime Drug Enforcement Task Force Strike Force/Strategic Initiative Programs and Policy and Procedures Manual, FY 2017.

3. An Agreement for the use of the OCDETF Strike Force/Strategic Initiative Programs ("Agreement") must be completed whenever state or local law enforcement agencies plan to seek reimbursement for permissible costs resulting from their participation in a Strike Force investigation/Strategic Initiative. Agreements are specific to a single OCDETF Strike Force investigation/Strategic Initiative. Each Agreement must be approved and signed by a state or local law enforcement organization official, who is authorized to approve the expenditure of funds in support of OCDETF investigations, the Strike Force Commander (Strike Forces) or Regional Director (Strategic Initiatives) and the OCDETF Executive Office. All required signatures must be obtained before the Agreement can be accepted and the funds obligated.

4. An agreement must fall within a fiscal year period (October 1 – September 30). State and local agencies must use an accurate "Beginning Date of Agreement" (Not always October 1). An agreement can never be dated before the investigation was approved as an OCDETF case.

5. If an Agreement does not have any activity during the last ninety (90) days from the last time a bill has been submitted or during the first ninety (90) days from the date the Agreement was signed, the funds shall be deobligated. Further, if a state or local agency determines that it is no longer performing work under a particular Agreement, a modification memorandum identifying the amount to be deobligated will be submitted by the Strike Force Commander or Regional Director to the OCDETF Executive Office as soon as possible.

6. A listing of costs that will be reimbursed by the Strike Force/Strategic Initiative Programs will be attached to each agreement. The total cost listed on the Cost Estimate Sheet should match the Amount Requested on the Agreement Cover Page. This must be a detailed listing of each expense expected to be purchased under the Agreement. For example, simply listing "Equipment" or "Surveillance Equipment" is not acceptable. In this example, all equipment should be listed separately such as binoculars, cameras, camera mounts, etc. Each expense listed on the cost estimate sheet must also have a price quote submitted with the Agreement to verify the accuracy of the cost estimates.

7. The Strike Force Commander (Strike Forces) or Regional Director (Strategic Initiative) must ensure that the cumulative authorized expense commitments do not exceed the total Strike Force/Strategic Initiative fund allocation.

8. Reimbursement for any expenditure above the Agreement amount must be approved by both the Strike Force Commander (Strike Forces) or Regional Director (Strategic Initiative) and the OCDETF Executive Office.

9. All approving officials must agree to amendments or changes to the amount of the Agreement, the listing of eligible items to be reimbursed, and associated estimates that occur after an Agreement has been executed. These amendments or changes must be transmitted by a memorandum approved and signed by the Strike Force Commander (Strike Forces) or Regional Director (Strategic Initiatives), and forwarded to the OCDETF Executive Office. All changes made to the original agreement must be approved and initialed by the person making the revision and the Strike Force Commander (Strike Forces) or Regional Director (Strategic Initiatives).

10. This agreement may be terminated by any of the parties by written notice to the other parties ten (10) business days prior to termination. Billing for outstanding obligations shall be received by OCDETF within thirty (30) days of the notice of termination.

11. Costs incurred pursuant to an OCDETF investigation or due to participation in an OCDETF Strategic Initiative by a state and local program participant, including informant fees, purchase of evidence, travel, either by a state or local officer, witness or confidential source; rental of automobiles; cost of interpreters or translators; training in support of OCDETF; technical surveillance equipment; rental of office space for temporary use, such as an off-site location for electronic monitoring or off-site command post, may be reimbursed by OCDETF under certain circumstances.

12. Rental payments cannot be paid in advance and must be paid in arrears. Reimbursable Requests with rent included are due on the first workday of each month, and must be for the month that just ended rather than the month beginning. For example, reimbursement for rental space incurred in February cannot take place before March 1st. Any exceptions or additions to the approved reimbursable costs listed above must be detailed and attached in Addendum A of the Agreement.

13. Property and equipment purchased through the OCDETF Program must remain available to the Strike Force/Strategic Initiative for the duration of its existence. The reimbursement of these items must be permissible under the AFF statute, Section 524 (c)(1)(l) of Title 28, United States Code, and this guidance, and are subject to the availability of funds.

14. Subsequent to payment of invoices by the state and local organization to a third party vendor, OCDETF will reimburse the organization for approved investigation or initiative related equipment and service costs. Claims must be submitted monthly on the OCDETF Reimbursement Request Form.

15. State and local organizations must provide official procurement documents to support all reimbursable expenditures to the Strike Force Commander (Strike Forces) or Regional Director (Strategic Initiatives). If proper supporting documentation is not available, OCDETF will not make reimbursement payments. The cumulative amount of all reimbursements cannot exceed the agreement amount without proper modification.

16. The state or local organization shall permit examination and auditing by representatives of the OCDETF Program, the sponsoring Federal agencies, DOJ, the Comptroller General of the United States, and/or any of their duly-authorized agents and representatives, of all records, documents, accounts, invoices, receipts, or expenditures relating to this agreement. In addition, the state or local agency will maintain all such foregoing reports and records until all audits and examinations are completed and resolved, or for a period of six (6) years after termination of this Agreement, whichever is later. Failure to provide proper documentation will limit State or Local law enforcement organizations from receiving OCDETF funding in the future.

17. The state or local organization will comply with Title VI of the Civil Rights Act of 1964 and all requirements applicable to OCDETF agreements pursuant to the regulations of the Department of Justice (see, e.g., 28 C.F.R. Part 42, Subparts C and G; 28 C.F.R. 50.3 (1991)) relating to discrimination on the grounds of race, color, sex, age, national origin or handicap.

18. Electronic Funds Transfer Process

    a) The Debt Collection Improvement Act of 1996 requires that most payments made by the Federal government, including vendor payments, must be made by electronic funds transfer (EFT). All participating State and Local agencies must complete and submit the attached ACH vendor enrollment form. The OCDETF Executive Office must receive one ACH form from each participating agency or police department prior to processing their reimbursement payments.

This agreement is not a contract or obligation to commit Federal funds in the maximum amounts projected. Funding allocations for the time period set forth, agreed to herein represent projections only, and are based upon consultation between the Strike Force or Regional Director and the state or local law enforcement organization. They are, therefore, subject to modification by OCDETF based upon the progress and needs of the OCDETF investigation. Additionally, resources are contingent upon the availability of funds per the approval and signature of the OCDETF Executive Office obligating authority. The OCDETF Executive Office will approve and certify that all the terms and conditions of the agreement have been met.

Approved By: _____

Authorized State or Local Official *Title* *Date*

Approved By: _____

Strike Force Commander (SF) / Regional Director (SI) *Date*

Funds are encumbered for the costs specified above, **subject to the availability of funds**.

Funds Certified: _____

OCDETF Executive Office *Date*

Approving Official: _____

OCDETF Executive Office *Date*

ORGANIZED CRIME DRUG ENFORCEMENT TASK FORCES

STRIKE FORCE/STRATEGIC INITIATIVE AGREEMENT COST ESTIMATE

Name of Strike Force/Strategic Initiative: M5-16-0032

OCDETF Investigation/Strategic Initiative Number: SW-TXS-1059

The following is an estimate of operational costs expected to be incurred by state and local law enforcement in an OCDETF Strike Force investigation or Strategic Initiative. These costs are reimbursable under this agreement, subject to the availability of funds.

	DESCRIPTION	AMOUNT
1.	Leased Vehicle @ $900 x 4 months	$ 3,600.00
2.	Fuel	$ 1,500.00
3.	TOTAL:	$ 5,100.00
4.		
5.		
6.		
7.		
8.		
9.		
10.		
11.		
12.		
13.		

Addendum A

Exception to EFT Policy Justification:

The McAllen District Office Strike Force Group D81 is requesting the following which will be utilized by the McAllen District Office/Strike Force Group D81. 9fy'2017)

Other Exceptions or Justifications:

ACH VENDOR/MISCELLANEOUS PAYMENT
ENROLLMENT FORM

PAYEE/COMPANY INFORMATION (State & Local Agency name and address must match Agreement cover sheet)

Name: Hidalgo County Sherrif's Office	
Address: 100 E. Cano, 3rd Floor	
Edinburg, TX 78539	
Taxpayer ID Number: 746000717	
Contact Person Name: Norma Garcia	Telephone Number: (956) 318-2506

FINANCIAL INSTITUTION INFORMATION

Bank Name: Lone Star National Bank
Nine-Digit ABA Routing Transit Number: 114911687
Depositor Account Number: 71015647
Type of Account: (checking/savings) Checking

Please return with the Reimbursable Agreement

The Debt Collection Improvement Act of 1996 requires that most payments made by the Federal government, including vendor payments, must be made by electronic funds transfer (EFT). A benefit of receiving payments by EFT is that your funds are directly deposited to your account at a financial institution and are available to you on the date of payment.

If you have any question regarding the delivery of remittance information, please contact the financial institution (bank) where your account is held.

If you have any question on the completion of this form, please contact the OCDETF State and Local EFT Coordinator at 202-514-1860

To inquire about a bill please contact: https://www.ipp.gov/

AI-59917 **Sheriff's Office** **9. C.**

CC - REGULAR

Meeting Date: 05/30/2017

Submitted For: Roy Quintanilha, SHERIFF DEPT.

Submitted By: Emilia Uriegas, SHERIFF DEPT.

Department: SHERIFF DEPT.

Information

CAPTION

Jail Commissary:
1. Approval of certification of revenues by the County Auditor in the amount of $5,392.20.
2. Approval of 2017 appropriation of funds in the Jail Commissary account for the amount of $5,392.20.

BACKGROUND

Fiscal Impact

CALENDAR YEAR: 2017 **ACCT. #:** 7-2102-423-21-280-015-0-XXX

FUNDS AVAILABLE Y/N?: Y **MATCHING FUNDS Y/N?:** N

BUDGETARY IMPACT:

Funds available as of 05/19/17, as provided by the Jail Commissary Bank Account. Monies forwarded to County Treasurer's Office (Receipt No. 210700 dated 05/19/17).

Attachments

budget.amendment
cor.request
COR

Form Review

Inbox	Reviewed By	Date
Emilia Uriegas (Originator)	Emilia Uriegas	05/22/2017 12:27 PM
Budget & Management	Veronica Ortiz	05/22/2017 01:30 PM
Final Approval	Monica Salinas	05/26/2017 02:58 PM
Form Started By: Emilia Uriegas		Started On: 05/18/2017 12:30 PM
Final Approval Date: 05/26/2017		

DATE: May 18, 2017
DEPARTMENT HEAD: J. E. "Eddie" Guerra
DEPARTMENT NAME: Jail Commissary
ACCOUNT NUMBER: 7-2102-423-21-280-015-0-XXX

SUBJECT: **Budget Amendments (Increases) in Accordance with Local Government Code, Chapter 111, Subchapter C**

Honorable Commissioners' Court of Hidalgo County:

I would like to request the following Amendments (increases) to my budget in accordance with Local Government Code, Chapter 111, Subchapter C

INCREASE ACCOUNT NUMBER(S)	ACCOUNT OBJECT NAME	AMOUNT
7-2102-423-21-280-015-0-340	Jail Commissary--Technical Services	521.85
7-2102-423-21-280-015-0-610	Jail Commissary--General Supplies	390.00
7-2102-423-21-280-015-0-660	Jail Commissary--Furnishings and Equipment	4,480.35
7-2102-391-03-000-426-0-000	Transfers In - Jail Commissary Trust Fund	5,392.20

TOTAL APPROPRIATIONS **5,392.20**

REASON: **To appropriate funding for Holding Cells Monitors (5) at the Adult Detention Center.**

DEPARTMENT HEAD SIGNATURE

DATE / /

APPROVED COMMISSIONERS' COURT

ATTEST COUNTY CLERK

Emilia Uriegas

From: Emilia Uriegas <emilia.uriegas@hidalgoso.org>
Sent: Monday, May 22, 2017 11:08 AM
To: 'ray.eufracio@auditor.co.hidalgo.tx.us'; 'linda.fong@auditor.co.hidalgo.tx.us'
Subject: Certification of Revenues Request
Attachments: COR.REQUEST $5392.20.pdf

Mr. Eufracio:

This is to formally request the certification of revenues for $5,392.20 (Jail Commissary Account – Program 2102) in reference
to AI#59917 for CC agenda of 05/30/17.

Should you require additional information, feel free to contact me.

Thank you.

Emilia Uriegas
Budget Manager II
Hidalgo County Sheriff's Office
711 E El Cibolo Road
Edinburg, Texas 78542
Main: 956-383-8114
Direct: 956-393-6028
Fax: 956-393-6027
emilia.uriegas@hidalgoso.org

AI-59917 **Sheriff's Office**

CC - REGULAR

Meeting Date: 05/30/2017

Submitted For: Roy Quintanilha, SHERIFF DEPT.

Submitted By: Emilia Uriegas, SHERIFF DEPT.

Department: SHERIFF DEPT.

Information

CAPTION

1. Approval of certification of revenues as certified by the County Auditor.
2. Approval of appropriation of funds in the Jail Commissary account for the amount of $5,392.20.

BACKGROUND

Fiscal Impact

CALENDAR YEAR: 2017 **ACCT. #:** 7-2102-423-21-280-015-0-XXX

FUNDS AVAILABLE Y/N?: Y **MATCHING FUNDS Y/N?:** N

BUDGETARY IMPACT:

Funds available as of 05/19/17, as provided by the Jail Commissary Bank Account. Monies forwarded to County Treasurer's Office (Receipt No. 210700 dated 05/19/17).

Attachments

budget.amendment

Form Review

Inbox	Reviewed By	Date
	Emilia Uriegas	05/18/2017 12:30 PM

Form Started By: Emilia Uriegas Started On: 05/18/2017 12:30 PM

DATE: May 18, 2017
DEPARTMENT HEAD: J. E. "Eddie" Guerra
DEPARTMENT NAME: Jail Commissary
ACCOUNT NUMBER: 7-2102-423-21-280-015-0-XXX

SUBJECT: **Budget Amendments (Increases) in Accordance with Local Government Code, Chapter 111, Subchapter C**

Honorable Commissioners' Court of Hidalgo County:

I would like to request the following Amendments (increases) to my budget in accordance with Local Government Code, Chapter 111, Subchapter C

INCREASE ACCOUNT NUMBER(S)	ACCOUNT OBJECT NAME	AMOUNT
7-2102-423-21-280-015-0-340	Jail Commissary--Technical Services	521.85
7-2102-423-21-280-015-0-610	Jail Commissary--General Supplies	390.00
7-2102-423-21-280-015-0-660	Jail Commissary--Furnishings and Equipment	4,480.35
7-2102-391-03-000-426-0-000	Transfers In - Jail Commissary Trust Fund	5,392.20

TOTAL APPROPRIATIONS 5,392.20

REASON: **To appropriate funding for Holding Cells Monitors (5) at the Adult Detention Center.**

DEPARTMENT HEAD SIGNATURE

DATE

APPROVED COMMISSIONERS' COURT

ATTEST COUNTY CLERK

OFFICIAL HIDALGO COUNTY RECEIPT
OFFICE OF THE COUNTY TREASURER
NORMA G. GARCIA

Receipt No: 210700

Received From: SHERIFF'S DEPT. 05/18/17 Date 05/19/17

1	5321	05/18/17 FUNDING;HOLDING CELLS MONITORS	7-2102-391-03-000-426-0-000	5,392.20

Total: 5,392.20

Check Total	5,392.20
Cash Total	.00
Credit Total	.00
Other Total	.00

COUNTY of HIDALGO



EDINBURG, TEXAS 78539

HIDALGO COUNTY AUDITOR'S OFFICE
Hidalgo County Administration Building
2808 South Business Highway 281
Edinburg, Texas 78539-6243
PHONE: (956) 318-2511
FAX: (956) 318-2577
WEBSITE: www.co.hidalgo.tx.us/auditor

May 26, 2017

The Honorable Ramon Garcia, Hidalgo County Judge
The Honorable David Fuentes, Commissioner, Precinct No. 1
The Honorable Eduardo "Eddie" Cantu, Commissioner, Precinct No. 2
The Honorable Jose M. Flores, Commissioner, Precinct No. 3
The Honorable Joseph Palacios, Commissioner, Precinct No. 4

RE: Certification of Revenue

Dear Judge and Commissioners:

Pursuant to Local Government Code § 111.07075 SPECIAL BUDGET FOR REVENUE RECEIVED AFTER START OF FISCAL YEAR.

> The county auditor shall certify to the commissioners court the receipt of revenue from a new source not anticipated before the adoption of the budget and not included in the budget for that fiscal year. On certification, the court may adopt a special budget for the limited purpose of spending the revenue for general purposes or for any of its intended purposes.

I, Ray Eufracio, County Auditor of Hidalgo County, certify to the Hidalgo County Commissioners Court the revenue received from a transfer from Jail Commissary Trust Fund in the amount of $5,392.20 to fund the purchase of holding cells monitors at the Hidalgo County Adult Detention Center. These funds may now be made available by creating a new special budget or amending a current budget for its intended purposes.

CERTIFIED BY:

Raymundo Eufracio, CPA
Hidalgo County Auditor

5/30/17
Date

HIDALGO COUNTY DISTRICT JUDGES

LUIS M. SINGLETERRY JUDGE, 92ND D.C. | RODOLFO DELGADO JUDGE, 93RD D.C. | J. R. "BOBBY" FLORES JUDGE, 139TH D.C. | ROSE GUERRA REYNA JUDGE, 206TH D.C. | JUAN R. PARTIDA JUDGE, 275TH D.C. | MARIO E. RAMIREZ, JR. JUDGE, 332ND D.C. | NOE GONZALEZ JUDGE, 370TH D.C. OVERSEER | LETICIA LOPEZ JUDGE, 389TH D.C. | L. KENO VASQUEZ JUDGE, 398TH D.C. | ISRAEL RAMON, JR. JUDGE, 430TH D.C. | RENEE R. BETANCOURT JUDGE, 449TH D.C.

Nereyda Gonzalez

From: Linda Fong [linda.fong@auditor.co.hidalgo.tx.us]
Sent: Monday, May 22, 2017 12:00 PM
To: nereyda.gonzalez@auditor.co.hidalgo.tx.us
Cc: becky.luna@auditor.co.hidalgo.tx.us
Subject: Fwd: Certification of Revenues Request
Attachments: COR.REQUEST $5392.20.pdf

---- Original Message ----
From: "Emilia Uriegas" <emilia.uriegas@hidalgoso.org>
Sent: 5/22/2017 11:08:09 AM
To: ray.eufracio@auditor.co.hidalgo.tx.us, linda.fong@auditor.co.hidalgo.tx.us
Subject: Certification of Revenues Request

Mr. Eufracio:

This is to formally request the certification of revenues for $5,392.20 (Jail Commissary Account – Program 2102) in reference

to AI#59917 for CC agenda of 05/30/17.

Should you require additional information, feel free to contact me.

Thank you.

Emilia Uriegas

Budget Manager II

Hidalgo County Sheriff's Office

711 E El Cibolo Road

Edinburg, Texas 78542

Main: 956-383-8114

Direct: 956-393-6028

Fax: 956-393-6027

emilia.uriegas@hidalgoso.org

AI-59917 **Sheriff's Office 15. C.**

CC - REGULAR

Meeting Date: 05/30/2017

Submitted For: Roy Quintanilha, SHERIFF DEPT.

Submitted By: Emilia Uriegas, SHERIFF DEPT.

Department: SHERIFF DEPT.

Information

CAPTION

1. Approval of certification of revenues as certified by the County Auditor.
2. Approval of 2017 appropriation of funds in the Jail Commissary account for the amount of $5,392.20.

BACKGROUND

Fiscal Impact

CALENDAR YEAR: 2017 **ACCT. #:** 7-2102-423-21-280-015-0-XXX

FUNDS AVAILABLE Y/N?: Y **MATCHING FUNDS Y/N?:** N

BUDGETARY IMPACT:

Funds available as of 05/19/17, as provided by the Jail Commissary Bank Account. Monies forwarded to County Treasurer's Office (Receipt No. 210700 dated 05/19/17).

Attachments

budget.amendment

cor.request

Form Review

Inbox	Reviewed By	Date
Emilia Uriegas (Originator)	Emilia Uriegas	05/22/2017 12:27 PM
Budget & Management	Veronica Ortiz	05/22/2017 01:30 PM
Final Approval		
Form Started By: Emilia Uriegas		Started On: 05/18/2017 12:30 PM

DATE: May 18, 2017
DEPARTMENT HEAD: J. E. "Eddie" Guerra
DEPARTMENT NAME: Jail Commissary
ACCOUNT NUMBER: 7-2102-423-21-280-015-0-XXX

SUBJECT: **Budget Amendments (Increases) in Accordance with Local Government Code, Chapter 111, Subchapter C**

Honorable Commissioners' Court of Hidalgo County:

I would like to request the following Amendments (increases) to my budget in accordance with Local Government Code, Chapter 111, Subchapter C

INCREASE ACCOUNT NUMBER(S)	ACCOUNT OBJECT NAME	AMOUNT
7-2102-423-21-280-015-0-340	Jail Commissary--Technical Services	521.85
7-2102-423-21-280-015-0-610	Jail Commissary--General Supplies	390.00
7-2102-423-21-280-015-0-660	Jail Commissary--Furnishings and Equipment	4,480.35
7-2102-391-03-000-426-0-000	Transfers In - Jail Commissary Trust Fund	5,392.20

TOTAL APPROPRIATIONS 5,392.20

REASON: To appropriate funding for Holding Cells Monitors (5) at the Adult Detention Center.

DEPARTMENT HEAD SIGNATURE

/ /
DATE

APPROVED COMMISSIONERS' COURT

ATTEST COUNTY CLERK

OFFICIAL HIDALGO COUNTY RECEIPT
OFFICE OF THE COUNTY TREASURER
NORMA G. GARCIA

Receipt No: 210700

Received From: SHERIFF'S DEPT. 05/18/17 Date 05/19/17

1	5321	05/18/17 FUNDING;HOLDING CELLS MONITORS	7-2102-391-03-000-426-0-000	5,392.20

Total: 5,392.20

Check Total	5,392.20
Cash Total	.00
Credit Total	.00
Other Total	.00

HIDALGO COUNTY SHERIFF'S OFFICE
REVENUE REMITTANCE FORM
DATE: **May 18, 2017**

TO: HIDALGO COUNTY TREASURER

THE FOLLOWING REMITTANCE REPRESENTS COLLECTIONS FOR:

1. Sheriff's Office - Court Ordered Confiscations $ _____
   (Seizure made prior to October 18, 1989)

   A. Credit Account Number: _____
   B. Actual date property seizure was made: _____
   C. Funds were awarded by District Court No. _____
      on _____. CAUSE # _____
   D. These Funds must be Appropriated through Commissioner's Court before they can be expended.

2. Undistributed Sheriff Fines and Court Costs ("D" Account) $ _____

   A. Credit Account Number: _____
   B. For Receipts Issued from No. _____ to No. _____
   C. For Date(s) _____

3. Sheriff's Office - Court Ordered Confiscations $ _____
   (Seizure made on October 18, 1989 and thereafter)

   A. Credit Account Number: _____
   B. Actual date property seizure was made: _____
   C. Funds were awarded by District Court No. _____
      on _____. CAUSE # _____
   D. These Funds must be Appropriated through Commissioner's Court before they can be expended.

4. Sheriff's Office - Jail Commissary Trust Funds $ **5,392.20**

   A. Credit Account Number: **7-2102-391-03-000-426-0-000**
   B. For purchase/installation of Holding Cells Monitors
   C. These payments comply with all applicable State Statutes and any applicable rules promulgated by the Texas Commission on Jail Standards.

$ **5,392.20**

APPROVED BY: _____ 05/18/17
HIDALGO COUNTY SHERIFF OR DESIGNEE — DATE

PREPARED BY: Emilia Mireles _____
ACCOUNTANT II — TREASURER'S RECEIPT NO.

COUNTY AUDITOR'S FORM: SFA-S-010
REVISED: 04/96

ORIGINAL DOCUMENT PRINTED ON CHEMICAL REACTIVE PAPER WITH HEAT SENSITIVE INK AND ICON AND MICROPRINTED BORDER

HIDALGO COUNTY JAIL COMMISSARY
P.O. BOX 1228
EDINBURG, TX 78540
PH. 956-381-7900 EXT. 7928

LONESTAR NATIONAL BANK
WWW.LONESTARNATIONALBANK.COM
88-1168/1149

5321

5/18/2017

PAY TO THE ORDER OF Hidalgo County Treasurer

$ **5,392.20

Five Thousand Three Hundred Ninety-Two and 20/100********** DOLLARS

Hidalgo County Treasurer

Void After 90 Days

MEMO Funding for Holding Cells Monitors

⑈005321⑈ ⑆111911687⑆ 710 15949⑈

HIDALGO COUNTY JAIL COMMISSARY 5321

Hidalgo County Treasurer 5/18/2017

Funding for Holding Cells Monitors 5,392.20

Cash on Deposit - LS Funding for Holding Cells Monitors 5,392.20

Nereyda Gonzalez

From: Letty Chavez [Letty.Chavez@auditor.co.hidalgo.tx.us]
Sent: Wednesday, May 24, 2017 10:51 AM
To: 'Nereyda Gonzalez'
Cc: 'Linda Fong'; 'Marcela Luna'; 'Arcy Duran'
Subject: FW: Holding Cells Monitors
Attachments: CDW-G $5,392.20.pdf

From: Emilia Uriegas [mailto:emilia.uriegas@hidalgoso.org]
Sent: Wednesday, May 17, 2017 4:42 PM
To: letty.chavez@auditor.co.hidalgo.tx.us
Subject: Holding Cells Monitors

Letty:

Please review the attached. The item is to be purchased w/ funds from the Jail Commissary Account.
I have included the object codes for your review. Let me know if you are in agreement.

This represents the **second project** mentioned on the attachment along w/ the legal opinion.

Thank you.

Emilia Uriegas
Budget Manager II
Hidalgo County Sheriff's Office
956-393-6028

Zimbra **roy.quintanilha@hidalgoso.org**

Use of Commissary Funds

From : Roy Quintanilha <roy.quintanilha@hidalgoso.org> Fri, Feb 17, 2017 03:50 PM

Subject : Use of Commissary Funds

To : Josephine Ramirez <josephine.ramirez@da.co.hidalgo.tx.us>

Cc : Eddie Guerra <sheriff.guerra@hidalgoso.org>, Chief Mario Lopez <mario.lopez@hidalgoso.org>, Gabriel Castaneda <gabriel.castaneda@hidalgoso.org>, Victor Garza <victor.garza@da.co.hidalgo.tx.us>, Emilia Uriegas <emilia.uriegas@hidalgoso.org>, Rosie Gonzalez <rosieg@hidalgoso.org>

Good afternoon Ms. Ramirez,

As is our established protocol, prior to the use of Commissary Funds for building renovations, we are submitting to your office to for review to determine if the projects meet the requirements of the Texas Local Government Code Section 351.0415

Sec. 351.0415. COMMISSARY OPERATION BY SHERIFF OR PRIVATE VENDOR. (a) The sheriff of a county or the sheriff's designee, including a private vendor operating a detention facility under contract with the county, may operate, or contract with another person to operate, a commissary for the use of the inmates committed to the county jail or to a detention facility operated by the private vendor, as appropriate. The commissary must be operated in accordance with rules adopted by the Commission on Jail Standards.

(b) The sheriff or the sheriff's designee:

(1) has exclusive control of the commissary funds;

(2) shall maintain commissary accounts showing the amount of proceeds from the commissary operation and the amount and purpose of disbursements made from the proceeds; and

(3) shall accept new bids to renew contracts of commissary suppliers every five years.

(c) The sheriff or the sheriff's designee may use commissary proceeds only to:

(1) fund, staff, and equip a program addressing the social needs of the inmates, including an educational or recreational program and religious or rehabilitative counseling;

(2) supply inmates with clothing, writing materials, and hygiene supplies;

(3) establish, staff, and equip the commissary operation and fund the salaries of staff responsible for managing the inmates' commissary accounts;

(4) fund, staff, and equip both an educational and a law library for the educational use of inmates; or

(5) fund physical plant improvements, technology, equipment, programs, services, and activities that provide for the well-being, health, safety, and security of the inmates and the facility.

We have three proposed new projects that would require the use of commissary funds.

The first project is for the purchase and installation of cameras and camera monitoring system (monitors, dvr's, cabling etc) for the recreation yards in three sections of the jail that are not in the direct view of the officer assigned to the pod control. This will allow the officer to monitor from his control point existing cameras to now include inmates in the recreation yard thus enhancing the security and safety of the inmates.

The second for the purchase and installation of monitors with hardware and software. Monitors will be placed outside of the holding cells. The purpose of the holding cell monitors for a continues broadcast of inmate rules and information specific for inmates regarding visitation and commissary. Monitors will be placed in the visitation lobby's for the transmission of information to the inmates families regarding visitation rules, dates, how to deposit money in the inmates accounts for commissary, how to submit medication for inmates and how to file complaints.

The third project is a total upgrade of the current facility security control points through the pods and central control with new hardware and upgraded software that is responsible for security functions (i.e. cell doors opening and closing, locks, alarms etc.) that are antiquated (installed in 2002 for jail opening in 2003).

The listed projects would be a benefit to the inmates well-being, health and safety. We would work with the Hidalgo County Purchasing Department to ensure that all purchasing laws are followed. Once a vendor has been selected and the cost of each projects is known, we will transfer the appropriate amounts for the Purchase Orders as has been the practice to date.

These projects are essential for safe operations. Funding is available in Commissary accounts.

Thank you in advance for your attention to this request.

Chief Roy Quintanilha

Zimbra **roy.quintanilha@hidalgoso.org**

Re: Use of Commissary Funds

From : Josephine Ramirez <josephine.ramirez@da.co.hidalgo.tx.us> Tue, Feb 21, 2017 12:17 PM

Subject : Re: Use of Commissary Funds

To : Roy Quintanilha <roy.quintanilha@hidalgoso.org>

Cc : Eddie Guerra <sheriff.guerra@hidalgoso.org>, Chief Mario Lopez <mario.lopez@hidalgoso.org>, Gabriel Castaneda <gabriel.castaneda@hidalgoso.org>, Victor Garza <victor.garza@da.co.hidalgo.tx.us>, Emilia Uriegas <emilia.uriegas@hidalgoso.org>, Rosie Gonzalez <rosieg@hidalgoso.org>

Chief,

As our office has previously advised, the Texas Local Government Code dictates that the sheriff or the sheriff's designee may use commissary proceeds for a limited number of purposes, one of which is:

"[to] fund physical plant improvements, technology, equipment, programs, services, and activities that provide for the well-being, health, safety, and security of the inmates and the facility."

Tex. Loc. Gov't Code §351.0415(c)(5).

To the extent the proposed purchases will be used for the well being, health, and safety of inmates, and without further guidance that such purchases are not prohibited by section 351.0415(c)(5), it is likely the Sheriff's Office may use these funds for the proposed expenses.

As we have previously noted, the Sheriff has wide discretion to determine how to use these funds to meet the needs of the inmates and the facility. The improvements and replacement of security systems, monitors, etc., which you have described below appear to be permissible purchases in accordance with the applicable code provisions.

Should you need any further assistance from our office, please feel free to contact me.

Thank you,

Josephine Ramirez Solis

Assistant Criminal District Attorney

Chief - Civil Division

Office of Criminal District Attorney

Hidalgo County, Texas

100 E. Cano

Edinburg, TX 78539

(956) 292-7609 ext. 8186

(956) 318-2079 FAX

josephine.ramirez@da.co.hidalgo.tx.us

****

The information contained in this e-mail may be 1.SUBJECT TO THE ATTORNEY-CLIENT PRIVILEGE; 2.ATTORNEY WORK PRODUCT; and/or 3.CONFIDENTIAL. It is intended only for the individual or entity designated above. Any distribution, copying, or use of or reliance upon the information contained in this e-mail by or to anyone other than the recipient designated above by the sender is unauthorized and strictly prohibited. **IF YOU HAVE RECEIVED THIS COMMUNICATION IN ERROR, PLEASE ADVISE THE SENDER BY REPLY E-MAIL TO josephine.ramirez@da.co.hidalgo.tx.us AND DELETE THE COMMUNICATION.**

****

AI-59939 **Health & Human Services Dept.** **10. A.**

CC - REGULAR

Meeting Date: 05/30/2017

Submitted For: Julia Sullivan, PUBLIC AFFAIRS **Submitted By:** Jane Lopez, PUBLIC AFFAIRS

Department: PUBLIC AFFAIRS

Information

CAPTION

Resolution in Recognition of the Hidalgo County Tobacco Prevention and Control Coalition.

BACKGROUND

Fiscal Impact

Attachments

TPCC Resolution

Form Review

Inbox	Reviewed By	Date
Budget & Management	Veronica Ortiz	05/25/2017 08:52 AM
Final Approval	Monica Salinas	05/26/2017 02:58 PM
Form Started By: Jane Lopez		Started On: 05/22/2017 09:55 AM
Final Approval Date: 05/26/2017		

RESOLUTION IN RECOGNITION OF
HIDALGO COUNTY TOBACCO PREVENTION & CONTROL COALITION

WHEREAS, Hidalgo County Tobacco Prevention & Control Coalition was established in February 2014 to prevent tobacco use among adolescents, increase tobacco cessation and eliminate exposure to second hand smoke; and

WHEREAS, the mission of the Tobacco Prevention & Control Coalition is to promote and advocate for a tobacco-free environment by empowering communities to affect individual and social change, and promote compliance and support for enforcement of all tobacco laws; and

WHEREAS, the organization was created at Behavioral Health Solutions of South Texas and is comprised of cross-community volunteers with representation from multiple sectors such as public health agencies, education service centers, law enforcement, school districts, civic volunteer organizations, faith-based groups, private businesses and media; and

WHEREAS, currently, there are 72 smoke-free cities in the State of Texas, including 16 in the Rio Grande Valley. In Hidalgo County the cities of Alton, Donna, Edinburg, Mercedes, Pharr, San Juan, Mission, Peñitas, Weslaco, and Palmview have implemented 100% Comprehensive Smoke-Free Ordinances; and

WHEREAS, in just three short years, their strong outreach efforts and collaboration with municipalities across Hidalgo County has resulted in achieving the highest number of cities in the State of Texas with comprehensive smoke-free ordinances.

NOW, THEREFORE, BE IT PROCLAIMED that the Hidalgo County Commissioners Court hereby recognizes the Hidalgo County Tobacco Prevention & Control Coalition for their commitment to educating our community on the dangers of tobacco use and for helping protect over 370,000 workers, residents, and consumers from second hand smoke.

Approved this 30th day of May 2017.

RAMON GARCIA
County Judge

DAVID L. FUENTES
County Commissioner, Pct. 1

EDUARDO "EDDIE" CANTU
County Commissioner, Pct. 2

JOE M. FLORES
County Commissioner, Pct. 3

JOSEPH PALACIOS
County Commissioner, Pct. 4

Attest: ARTURO GUAJARDO, JR.
County Clerk

AI-59799 **Health & Human Services Dept.** **10. B.**

CC - REGULAR

Meeting Date: 05/30/2017

Submitted For: Dairen Sarmiento, HEALTH & HUMAN SERVICES DEPT.

Submitted By: Dairen Sarmiento, HEALTH & HUMAN SERVICES DEPT.

Department: HEALTH & HUMAN SERVICES DEPT.

Information

CAPTION

Presentation of Walk Across Texas Champions challenge #13.

BACKGROUND

Fiscal Impact

Attachments

No file(s) attached.

Form Review

Inbox	Reviewed By	Date
Budget & Management	Veronica Ortiz	05/11/2017 08:56 AM
Final Approval	Monica Salinas	05/26/2017 02:58 PM

Form Started By: Dairen Sarmiento Started On: 05/11/2017 08:46 AM

Final Approval Date: 05/26/2017

AI-59998 **Health & Human Services Dept.** **10. C.**

CC - REGULAR

Meeting Date: 05/30/2017

Submitted For: Eddie Olivarez, HEALTH & HUMAN SERVICES DEPT.

Submitted By: Mike Escaname, HEALTH & HUMAN SERVICES DEPT.

Department: HEALTH & HUMAN SERVICES DEPT.

Information

CAPTION

HSGP (1293):
Requesting approval to submit extension request for grant contract #3114901 from the Office of the Governor to end on 08/31/2017. The purpose of the extension is to reallocate available funds and allow additional time for procurement.

BACKGROUND

10/25/16 - AI-56786 - Acceptance of grant conract.
03/07/17 - Approval to extend end date.

Fiscal Impact

CALENDAR YEAR: 2017 **ACCT. #:** 7-1293-441-00-340-067-7-XXX

FUNDS AVAILABLE Y/N?: Y **MATCHING FUNDS Y/N?:** N

BUDGETARY IMPACT:

No budgetary impact;

Attachments

Grant Adjustment Request

Form Review

Inbox	Reviewed By	Date
Budget & Management	Veronica Ortiz	05/25/2017 09:50 AM
Final Approval	Monica Salinas	05/26/2017 02:58 PM
Form Started By: Mike Escaname		Started On: 05/25/2017 09:20 AM
Final Approval Date: 05/26/2017		

9:03 AM

Agency Name: Hidalgo County
Project Title: Hidalgo County Regionally Ready and Responsive (Public Health)
Grant/App: 3114901
Status: Active Grant
Start Date: 9/1/2016
End Date: 6/30/2017
Fund Source: HS-Homeland Security Grant Program (HSGP)
Current Grant Manager: Dorothy Caston
Current Program Manager: Robert Cottle
Liquidation Date: 9/28/2017
CFDA: 97.067
OOG Solicitation: SHSP Regular Solicitation-amended - FY16

General Information and Instructions

View Introduction

View Guidelines

View Instructions

Financial Status Summary for this Project

This section displays your grant project's financial status to date.

Today's Date: 5/25/2017
Grant Start Date: 9/1/2016
Grant End Date: 6/30/2017
Grant Liquidation Date: 9/28/2017

Current Grant Award Amount: $21,300.00
Total Expenditures Reported to Date: $0.00
Total Reimbursement(s) and Advance Payment Request(s) Paid to Date: $0.00
Maximum Reimbursement Amount Available: $0.00
Total Unexpended Balance to Date: $21,300.00

Date This Adjustment Request was Created by Grantee:
Date This Adjustment Request was Submitted to OOG:
Adjustment Request Status:

☐ Check to display Permissions for Certifying Adjustment

Programmatic and Budget Adjustments

Request Authorization for a Grant Official Change or Modify the Project's Identifying Information

Designate a new **Grant Official** or modify the existing information for the:

☐ Authorized Official (Note: Supporting documentation may need to be submitted to OOG, such as the Resolution.)
☐ Financial Officer
☐ Project Director
☐ Grant Writer

Modify the project's **Identifying Information** for the:

☐ Applicant Agency Name (Note: Supporting documentation may need to be submitted to OOG, such as the Resolution, Nonprofit Documentation, etc.)
☐ Project Title
☐ Project's Official Address
☐ System for Award Management (SAM) Expiration Date
☐ Data Universal Numbering System (DUNS)

Request Authorization for a Change Project Scope or Impact Area

Request a modification to the **Project's Scope** and / or **Impacted Area or other Supporting Programmatic and Fiscal Documentation** for the following:

☐ Project Narrative
☐ Project Activities and / or Performance Measures
☐ Supporting Documents

Supporting Documents

☐ Fiscal Capability (Nonprofit Corporations only)

☐ Homeland Security Information (Homeland Security grants only)

Request Authorization for a Budget Modification
Budget Adjustments (will not result in an increase or decrease to the OOG grant award amount):

☐ Click here to modify the budget

Extension, Supplemental / De-obligation, and Other Grant Adjustments

Request Authorization for an Extension of the Grant Period

This section allows grantee to request an extension grant period end date.
Request an extension of project's **End Date** to expend the following:

☐ Existing Funds
☐ Supplemental Funds
☐ Spend Down Generated Program Income (GPI)
☐ Other (specify below under Adjustment Justification)

Enter the Revised End Date:

Request Authorization for a Budget Modification

Budget Supplements:

☐ Modify budget line items that will result in an increase to the **Total Project Cost** amount

Budget De-obligations:

☐ Modify budget line items that will result in a decrease to the **Total Project Cost** amount

Apply GPI earned to this budget (might result in decrease to the OOG Funds award amount):

☐ GPI to be applied to this budget is a result of a Court Forfeiture
☐ GPI to be applied to this budget is a result of Other Sources (e.g., fees, interest)

Grant Adjustment Justification

Created Date:
Adjustment Status:
Enter the Adjustment Justification:

Create an Adjustment Request

Please complete the **Adjustment Request**, and then click the **Create an Adjustment Request** button to submit your request to OOG.

AI-60020 **Health & Human Services Dept.** **10. D.**

CC - REGULAR

Meeting Date: 05/30/2017

Submitted For: Eddie Olivarez, HEALTH & HUMAN SERVICES DEPT.

Submitted By: Mike Escaname, HEALTH & HUMAN SERVICES DEPT.

Department: HEALTH & HUMAN SERVICES DEPT.

Information

CAPTION

Requesting approval of the Interlocal Cooperation Agreement Between The University of Texas Rio Grande Valley and The County of Hidalgo. The purpose of the Agreement is surveillance and screening of mosquito-borne diseases in the Lower Rio Grande Valley.

BACKGROUND

Fiscal Impact

CALENDAR YEAR: 2017 **ACCT. #:** N/A

FUNDS AVAILABLE Y/N?: N/A **MATCHING FUNDS Y/N?:** N

BUDGETARY IMPACT:

No budgetary impact.

Attachments

Legal

Interlocal

Form Review

Inbox	Reviewed By	Date
Budget & Management	Veronica Ortiz	05/25/2017 04:07 PM
Final Approval	Monica Salinas	05/26/2017 02:58 PM

Form Started By: Mike Escaname Started On: 05/25/2017 03:42 PM

Final Approval Date: 05/26/2017

Mike Escaname

From: Nancy Pearl Trevino <nancy.trevino@hchd.org>
Sent: Thursday, May 25, 2017 3:20 PM
To: 'Mike Escaname'
Subject: FW: UTRGV Mosquito ILA
Attachments: 17-061 ILCA Hidalgo County and UTRGV.finaldraft.docx; UTRGV Interlocal ATTACHMENT A.docx

Mike approval from both UTRGV and Hidalgo County District Attorney is attached below.
Please place on the agenda for the May 30, 2017
Nancy
7337

From: Glorimar Colon [mailto:glorimar.colon@utrgv.edu]
Sent: Thursday, May 25, 2017 3:15 PM
To: Nancy Pearl Trevino
Subject: RE: UTRGV Mosquito ILA

Nancy,
Everything looks good. Please proceed. Thank you so much for help.
Glorimar

From: Victor Garza [mailto:victor.garza@da.co.hidalgo.tx.us]
Sent: Thursday, May 25, 2017 2:26 PM
To: Nancy Trevino
Subject: UTRGV Mosquito ILA

Nancy,

attached please find final draft of the ILA between the County and UTRGV. This draft is subsequent to my discussion with Ms. Colon, and is inclusive of the revisions we discussed and agreed upon.

I indicated to her that you would forward the final draft and place the matter on the agenda for May 30th. Please let me know if she has any additional changes or concerns.

respectfully,

Victor M. Garza
Assistant District Attorney
Civil Division
Office of the Criminal District Attorney
Hidalgo County, Texas
100 East Cano Street
Edinburg, Texas 78539

(956) 292-7609 EXT. 8185
(956) 292-7619 FAX
victor.garza@da.co.hidalgo.tx.us

****

The information contained in this e-mail may be 1.SUBJECT TO THE ATTORNEY-CLIENT PRIVILEGE; 2.ATTORNEY WORK PRODUCT; and/or 3.CONFIDENTIAL. It is intended only for the individual or entity designated above. Any distribution, copying, or use of or reliance upon the information contained in this e-mail by or to anyone other than the recipient designated above by the sender is unauthorized and strictly prohibited. **IF YOU HAVE RECEIVED THIS COMMUNICATION IN ERROR, PLEASE ADVISE THE SENDER BY REPLY E-MAIL TO victor.garza@da.co.hidalgo.tx.us AND DELETE THE COMMUNICATION.**

STATE OF TEXAS §
§
COUNTY OF HIDALGO §

INTERLOCAL COOPERATION AGREEMENT BETWEEN THE UNIVERSITY OF TEXAS RIO GRANDE VALLEY AND THE COUNTY OF HIDALGO

Surveillance and Screening of Mosquito-Borne Diseases in the Lower Rio Grande Valley

This Interlocal Cooperation Agreement (Agreement") is made on this 30 day of May, 2017 by and between The University of Texas Rio Grande Valley, ("UTRGV"), and the County of Hidalgo, acting by and through the Hidalgo County Health and Human Services Department ("County"), (collectively, the "Parties"), and pursuant to the provisions of the Texas Interlocal Cooperation Act, Texas Govt. Code 791.001 et seq., ("Act) , as follows:

WITNNESSETH:

WHEREAS, UTRGV is a political subdivision as defined by the Act, an Agency of the State of Texas organized under Chapter 79 of the Texas Education Code, an institution of higher education as defined by Texas Education Code Section 61.003(8), and is a component institution of The University of Texas System and has a campuses in Hidalgo County, Texas; and

WHEREAS, County is a "local government" as defined by the Act, and a political subdivision of the State of Texas, and the Hidalgo County Health and Human Services Department is a Health Department within the network of the Texas Department of State Health Services in Edinburg, Texas; and

WHEREAS, UTRGV desires to provide an educational and research program experience of the highest quality for its students, under the direction of UTRGV personnel, through health promotion, education, recreation, disease prevention, community development, and other services which will be provided under this agreement (the "Program"); and

WHEREAS, UTRGV is willing to collaborate with County to promote health and community self-interest in the County by deepening the understanding of the prevalence and risk of mosquito-borne diseases in the region; and

WHEREAS, UTRGV is willing to provide surveillance screening and vector-identification in collaboration with the County at no cost, based on duration and availability of funds for each of the Parties;

WHEREAS, UTRGV and County are authorized to enter into this Agreement pursuant to the Act, which authorizes local governments to cooperate with to perform governmental functions and services under the terms of the Texas Government Code;

NOW THEREFORE, in consideration of the mutual promises contained herein, in order to establish and implement the Program involving Surveillance and Screening of Mosquito-Borne Diseases in the Lower Rio Grande Valley, the Parties agree to collaborate for the provision of the services through the Program as follows:

1) **The Program will:**

a. Promote exchanges between both Parties through frequency communication of surveillance results and activities;
b. Develop protocols for transport and testing of locally collected mosquito specimens for identification and testing (if warranted due to increased probability of infection);
c. Develop protocols for transport and testing of locally collected, de-identified blood, urine, and other bodily fluid samples (as needed) to be tested at the Western Gulf Center for Excellence in Vector-Borne Disease, UTRGV Campus, while following guidelines required by the UTRGV approved IRB protocol (approval pending).
d. Allow for the immediate dissemination of positive results of these tests to the HCHHSD in the event of identification of an infected sample.
e. State that the identification of a positive sample is not a diagnostic result, but merely a screening survey and additional testing will be required for positive confirmation of infected human samples;
f. Allow for dissemination of results to scientific meetings, publications, or other venues as agreed upon by both parties.

2) **Coordinator Contact Information:**

The Parties hereby designate the following individuals to coordinate, oversee and facilitate the implementation of this Program:

For UTRGV: Christopher Vitek, Associate Professor
1201 West University Drive, Science Building 2.324
Edinburg, TX 78539
956-665-2845

Christopher.vitek@utrgv.edu

For County: Eduardo Olivarez, Chief Administrative Officer
1304 South 25th Ave.
Edinburg, TX 78539
Eddie.olivarez@hchd.org

3) Responsibilities of Designated Coordinators:

a. To promote collaboration between the Parties to facilitate the goals of this Agreement;
b. To act as principal contacts for individual and group activities and to plan and coordinate all activities within their organizations as well as with partner organizations;
c. To share with each Party information about the participants, facilities, outreach efforts, and resources of the other organization; and
d. To meet periodically to review and evaluate past activities and to work out new ideas for future cooperative agreements.

4) Transfer of Materials:

County may deliver to UTRGV samples collected in connection with the Program and/or services performed under this Agreement. The transfer of such samples from County to UTRGV shall be done under a simple "Letter Agreement" in the form attached as Attachment "A", and incorporated herein by reference.

5) General Provisions

a. **Term and Termination.** This Agreement shall commence as of the day and year first written above, and remain in effect until the 29 day of May, 2020. This Agreement may automatically renew for two (2) additional one (1) year terms under the same terms and conditions, or as amended by written agreement between the Parties. The Agreement may be terminated earlier by either party in accordance with this Agreement. Either Party may terminate this Agreement without cause by giving the other party ninety (90) days' written notice.

b. **Independent Contractors.** For the purposes of this Agreement and all services to be provided hereunder, the Parties are independent contractors and not agents or employees of the other Party. Neither Party shall have the authority to make any statements, representations or commitments f any kind, or to take action, which shall be binding on the other Party, except as expressively provided herein or authorized in writing. Under no

circumstances shall any employee or student of UTRGV be considered an agent or employee of County; they will be considered to be on the premises for the purpose of participating in the Program. County has no authority to dismiss UTRGV employees or students without UTRGV's consent. However, County Facility personnel may make recommendations to and shall retain its full power to control the practice and operations of a County.

c. **Entire Agreement.** This Agreement constitutes the entire agreement between the Parties with respect to the subject matter and no prior or contemporaneous agreements, written or oral, will be effective to vary the terms of those agreements. No amendment to this Agreement shall be effective unless reduced to a writing specifically referencing this Agreement and signed by an authorized representative of each Party.

d. **Compliance.** The Parties will comply with applicable federal, state and local laws, ordinances, rules and regulations in the performance of this Agreement including applicable, confidentiality and safety regulations.

e. **Waiver.** No waiver by any party hereto of any breach of any provision of the Agreement shall be deemed to be a waiver of any preceding or succeeding breach of the same or any other provision hereof.

f. **Notice.** Except as may be otherwise specifically provided in the Agreement, all notices, demands, request or communication required or permitted hereunder shall be in writing and shall either be (i) personally delivered against a written receipt, or (ii) send by registered or certified mail, return receipt requested, postage prepaid and addressed to the parties at the addresses set forth below, or at such other addresses as may have been theretofore specified by written noticed delivered in accordance herewith:

If to County:	Ramon Garcia Hidalgo County Judge 302 W. University Drive Edinburg, Texas 78539
With a copy to:	Eduardo Olivarez Chief Administrative Office Department of Health Hidalgo County Courthouse 100 N. Closner Edinburg, Texas 78539
If to UTRGV:	Glorimar Colón, JD Research Liaison Officer Division of Research, Innovation and Economic Development UTRGV 1201 W. University Drive Edinburg, Texas 78539-2999

Each notice, demand, request, or communication which shall be delivered or mailed in the manner described above shall be deemed sufficiently given for all purposes at such time as it is personally delivered to the addressee or, if mailed at such time as it is deposited in the United State mail.

g. **Controlling Law.** This Agreement shall be construed under and in accordance with the laws of the State of Texas, and all obligations of the parties created hereunder are performable in Hidalgo County, Texas.

h. **Additional Documents.** The Parties agree that they will use reasonable, good faith efforts to execute each such other and further instruments and documents as are or may become necessary or convenient to effectuate and carry out the terms of this Agreement.

i. **Assignment.** This Agreement may not be assigned by either party without written consent of the other party.

j. **Non-Discrimination.** The Program and all related activities shall be conducted in a manner that does not discriminate against any person on a basis prohibited by applicable law or UTRGV and/or County policy, including without limitation race, color, national origin, religion, sex, age, veteran status, or disability.

k. **Liabilities.** This Agreement is not intended to extend the liability of the Parties beyond that provided by law. Neither UTRGV nor County waive, nor shall be deemed to have hereby waived, any immunity or defenses that would otherwise be available to it against claims arising from third parties.

l. **Performance of Governmental Functions.** The Parties hereto are entering into this Agreement for the purpose of providing for governmental services or functions. The Parties understand that the costs regarding the services to be provided under this Agreement are to be paid for by the Party who incurs the cost. Nothing contained in this Agreement is to be construed as providing for the sharing of profits or losses arising out of the efforts of either or both Parties. Neither Party will be liable to the other for any costs, expenses, risks or liabilities arising out of the other Parties efforts in connection with this Agreement.

m. **Commitment of Current Revenues.** In the event that during the term hereof, the governing body of any Party does not appropriate sufficient funds to meet the obligations of such party under this Agreement, then any party may terminate this Agreement upon sixty (90) days written notice to the other party. Each of the parties hereto agrees to use its best efforts to secure funds necessary for the continued performance of this Agreement. The Parties intend this provision to be a continuing right to terminate this Agreement at the expiration of each budget period of each Party hereto.

EXECUTED by the County of Hidalgo and The University of Texas Rio Grande Valley in duplicate copies, each of which will be deemed an original.

THE UNIVERSITY OF TEXAS RIO GRANDE VALLEY

By: _____
Juan M. Sanchez, Ph.D.,
Interim Sr. Vice President for Research, Innovation & Economic Development

COUNTY OF HIDALGO, TEXAS

By: _____
Ramon Garcia, Hidalgo County Judge

ATTEST:

By: _____
Arturo Guajardo, Jr., Hidalgo County Clerk

APPROVED AS TO FORM:

Hidalgo County Criminal District Attorney's Office
Ricardo Rodriguez, Jr.

By: _____
Victor M. Garza, Assistant District Attorney

ATTACHMENT A - LETTER AGREEMENT FOR TRANSFER OF NON-PROPRIETARY MATERIAL

FROM: Hidalgo County – Health and Human Services Department

TO: The University of Texas Rio Grande Valley

A. **MATERIAL** (Enter description):

_____

_____

_____

_____

_____

B. **PROVIDER** (Organization providing the **MATERIAL**):

1. Authorized Official: Eduardo Olivarez, Chief Administrative Officer
2. Name of Organization: Hidalgo County Health and Human Services Department
3. Street Address: 1304 South 25th Ave.
4. City/State/Zip+4: Edinburg, Texas 78539

C. **RECIPIENT** (Organization receiving the **MATERIAL**):

1. Authorized Official: Jacquelyn Michel, AVP of Research Translation
2. Name of Organization: The University of Texas Rio Grande Valley
3. Street Address: 1201 West University Drive
4. City/State/Zip+4: Edinburg, Texas 78539

D. **RECIPIENT** and **PROVIDER** (identified above) have entered into a Cooperative Agreement having an effective date of May 30, 2017. As part of the scope of work to be performed under this Agreement, HCHHSD (**PROVIDER**) desires The University of Texas RGV (**RECIPIENT**) to analyze non-proprietary samples collected by HCHHSD. This Letter Agreement will be executed by the parties to memorialize each such transfer.

E. In response to the **PROVIDER**'s request that **RECIPIENT** analyze certain samples from **PROVIDER**, the **PROVIDER** asks that the **RECIPIENT** and the **RECIPIENT SCIENTIST** agree to the following before the **RECIPIENT** receives the **MATERIAL**:

1. The **MATERIAL** will not be further distributed to others without the **PROVIDER's** written consent. The **RECIPIENT** shall refer any such transfer request for the **MATERIAL** to the **PROVIDER**.

2. Any **MATERIAL** delivered to **RECIPIENT** pursuant to this Letter Agreement is understood to be experimental in nature and may have hazardous/infectious properties.

3. The **MATERIAL** is provided at no cost to **RECIPIENT.**

F. The **RECIPIENT** and the **RECIPIENT SCIENTIST** should sign both copies of this Letter Agreement and return one signed copy to the **PROVIDER SCIENTIST**. The **PROVIDER** will then forward the **MATERIAL** to the **RECIPIENT SCIENTIST**.

G. **PROVIDER SCIENTIST**

a. Name and Title:_____
b. Street Address:_____
c. City/State/Zip+4:_____
d. Signature:_____
e. Date:_____

H. **RECIPIENT SCIENTIST**

a. Name and Title: Dr. Christopher Vitek, Biology Professor
b. Street Address: 1201 West University Drive
c. City/State/Zip+4: Edinburg, Texas, 78539
d. Signature:_____
e. Date:_____

I. **RECIPIENT ORGANIZATION APPROVAL**

a. Name of Authorized Representative: Jacquelyn Michel, AVP of Research Translation
b. Street Address: 1201 West University Drive
c. City/State/Zip+4: Edinburg, Texas 78539
d. Signature_____
e. Date:_____

AI-60000 **Health & Human Services Dept.** **10. E.**

CC - REGULAR

Meeting Date: 05/30/2017

Submitted For: Eddie Olivarez, HEALTH & HUMAN SERVICES DEPT.

Submitted By: Mike Escaname, HEALTH & HUMAN SERVICES DEPT.

Department: HEALTH & HUMAN SERVICES DEPT.

Information

CAPTION

Requesting approval to allow Hidalgo County Health & Human Services staff in partnership with Hidalgo County Emergency Management staff to host and provide training for local Amateur Radio Operators at the Health Department conference room. The Field Day Exercise will be held on June 24, 2017.

BACKGROUND

Fiscal Impact

CALENDAR YEAR: 2017 **ACCT. #:** N/A

FUNDS AVAILABLE Y/N?: N/A **MATCHING FUNDS Y/N?:** N

BUDGETARY IMPACT:

No budgetary impact

Attachments

No file(s) attached.

Form Review

Inbox	Reviewed By	Date
Budget & Management	Veronica Ortiz	05/25/2017 09:50 AM
Ivan Cantu	Ivan Cantu	05/25/2017 10:30 AM
Final Approval	Monica Salinas	05/26/2017 02:58 PM

Form Started By: Mike Escaname Started On: 05/25/2017 09:33 AM

Final Approval Date: 05/26/2017

AI-60007 **Health & Human Services Dept.** **10. F.**

CC - REGULAR

Meeting Date: 05/30/2017

Submitted For: Eddie Olivarez, HEALTH & HUMAN SERVICES DEPT.

Submitted By: Mike Escaname, HEALTH & HUMAN SERVICES DEPT.

Department: HEALTH & HUMAN SERVICES DEPT.

Information

CAPTION

Discussion, consideration and update on ZIKA activities in Hidalgo County and encouragement on having licensed vector control staff in each precinct.

BACKGROUND

Fiscal Impact

Attachments

No file(s) attached.

Form Review

Inbox	Reviewed By	Date
Budget & Management	Veronica Ortiz	05/25/2017 11:37 AM
Final Approval	Monica Salinas	05/26/2017 02:58 PM

Form Started By: Mike Escaname Started On: 05/25/2017 11:24 AM

Final Approval Date: 05/26/2017

AI-59948 **Health & Human Services Dept.** **10. G.**

CC - REGULAR

Meeting Date: 05/30/2017

Submitted For: Eddie Olivarez, HEALTH & HUMAN SERVICES DEPT.

Submitted By: Mike Escaname, HEALTH & HUMAN SERVICES DEPT.

Department: HEALTH & HUMAN SERVICES DEPT.

Information

CAPTION

Discussion, consideration and approval to disseminate the 2017 Operation Lone Star VIP Day invitation on behalf of Hidalgo County Commissioner's Court and Pharr-San Juan-Alamo Independent School District.

BACKGROUND

The purpose of this invitation is to have the participation of local and state officials and representatives attend the VIP Day luncheon on Thursday, July 27, 2017 at 11:30 am at the PSJA Early College High School cafeteria located at 805 W Ridge Rd. San Juan, TX. Operation Lone Star is a full scale exercise with joint efforts of the Texas Military Forces, Texas Department of State Health Services, Texas Health & Human Services Commission, local health care leaders and volunteers who exercise the medical response for our community and offers an opportunity to provide free medical services to our communities in South Texas.

Fiscal Impact

CALENDAR YEAR: 2017 **ACCT. #:** N/A

FUNDS AVAILABLE Y/N?: N/A **MATCHING FUNDS Y/N?:** N

BUDGETARY IMPACT:

No budgetary impact.

Attachments

Doc

Form Review

Inbox	Reviewed By	Date
Budget & Management	Veronica Ortiz	05/23/2017 08:08 AM
Linda Flores	Linda Flores	05/23/2017 08:41 AM

Final Approval	Monica Salinas	05/26/2017 02:58 PM
Form Started By: Mike Escaname		Started On: 05/22/2017 04:18 PM
Final Approval Date: 05/26/2017		

HIDALGO COUNTY COMISSIONERS COURT AND PHARR-SAN JUAN-ALAMO INDEPENDENT SCHOOL DISTRICT CORDIALLY INVITE YOU TO

Operation Lone Star 2017

VIP Day

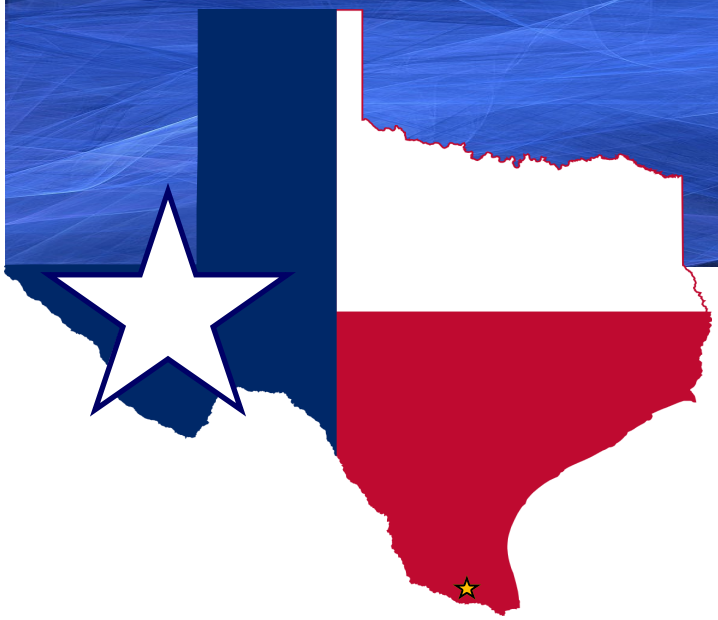

Thursday, July 27, 2017

11:30 AM

PSJA EARLY COLLEGE HIGH SCHOOL

CAFETERIA

805 W. RIDGE RD. SAN JUAN, TX

Please RSVP by July 14, 2017 to Arianna Vazquez at (956) 354 - 2027.

TEXAS Health and Human Services

Texas Department of State Health Services

THE COUNTY OF HIDALGO TEXAS

H&HSD COUNTY OF HIDALGO PUBLIC HEALTH PREPAREDNESS & RESPONSE

PSJA COLLEGE 3 READY.CONNECTED.COMPLETE

TEXAS MILITARY FORCES

HIDALGO COUNTY COMISSIONERS COURT AND PHARR-SAN JUAN-ALAMO INDEPENDENT SCHOOL DISTRICT CORDIALLY INVITE YOU TO

Operation Lone Star 2017

VIP Day

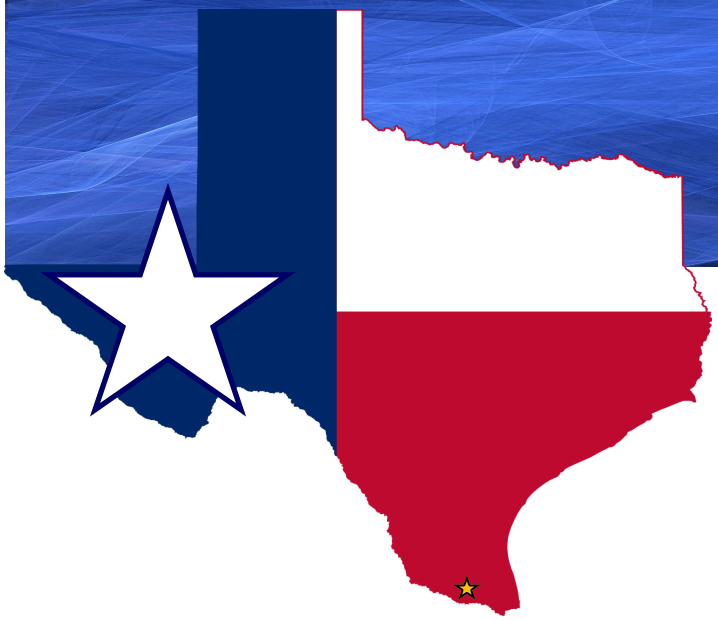

Thursday, July 27, 2017

11:30 AM

PSJA EARLY COLLEGE HIGH SCHOOL

CAFETERIA

805 W. RIDGE RD. SAN JUAN, TX

Please RSVP by July 14, 2017 to Arianna Vazquez at (956) 354 - 2027.

TEXAS Health and Human Services

Texas Department of State Health Services

THE COUNTY OF HIDALGO TEXAS

H&HSD COUNTY OF HIDALGO PUBLIC HEALTH PREPAREDNESS & RESPONSE

PSJA COLLEGE 3 READY.CONNECTED.COMPLETE

TEXAS MILITARY FORCES

AI-59916 **Health & Human Services Dept.** **10. H.**

CC - REGULAR

Meeting Date: 05/30/2017

Submitted For: Eddie Olivarez, HEALTH & HUMAN SERVICES DEPT.

Submitted By: Mike Escaname, HEALTH & HUMAN SERVICES DEPT.

Department: HEALTH & HUMAN SERVICES DEPT.

Information

CAPTION

1. Requesting approval to ratify action taken on 05/02/17 through AI-59536 to designate Eduardo Olivarez, Chief Administrative Officer as contact person / managing employee for the purpose of processing the Medicare revalidation.
2. Requesting approval to ratify action taken on 05/02/17 through AI-59536 to request authority for County Treasurer to process electronic payment in the amount of $560.00 to pay for the Provider Enrollment Medicare Application Fee after review and auditing procedures are completed by County Auditor.

BACKGROUND

Fiscal Impact

CALENDAR YEAR: 2017 **ACCT. #:** 7-1293-441-00-340-005-0-340

FUNDS AVAILABLE Y/N?: Y/pending **MATCHING FUNDS Y/N?:** N

BUDGETARY IMPACT:

Line item transfer processed for 05/30/17 to place sufficient funds to cover this expenditure. Reference AI-59915.

Attachments

Amount Due

Letter

Form Review

Inbox	Reviewed By	Date
Budget & Management	Veronica Ortiz	05/18/2017 11:02 AM
Ivan Cantu	Ivan Cantu	05/18/2017 11:44 AM
Final Approval	Monica Salinas	05/26/2017 02:58 PM
Form Started By: Mike Escaname		Started On: 05/18/2017 09:28 AM
Final Approval Date: 05/26/2017		

Medicare Enrollment
for Providers and Suppliers

Welcome

Application Fee Information

Institutional Providers who are submitting applications for the following reasons are required to pay the Provider Enrollment Medicare Application Fee:

- Initial Enrollment
- Revalidation
- Change of Information - Adding Practice Location
- Change of Ownership via CMS-855A - Buyer not accepting assignment of current Provider Agreement

All DMEPOS suppliers (including physicians and non-physician practitioners) are required to pay the fee for:

- New Applications
- Enrolling an additional location
- Revalidations
- Reactivations, unless the deactivation was a result of non-submission of claims for four consecutive quarters

Providers who are enrolled in Medicare but have not yet established a record in PECOS may be required to submit an Initial Enrollment application to establish a record in PECOS. If the reason for the application submittal is to change the information on the existing Medicare enrollment, and is not for the purpose of adding a practice location, then the Provider is not required to pay the application fee.

Year: 2017

Amount: $560

CONTINUE

Medicare Application Fee Factsheet [PDF,42KB] | Pay.gov Factsheet [PDF, 46KB] | Pay.gov FAQs [PDF, 57KB] | Medicare Fee-for-Service Contact Information [PDF, 250KB]

RECEIVED
APR 21 2017
CMS
CENTERS FOR MEDICARE & MEDICAID SERVICES
Hidalgo County
Health & Human Services Department MEDICARE
Edinburg Clinic

NOVITAS SOLUTIONS

April 10, 2017

HIDALGO COUNTY
3105 E RICHARDSON ROAD
EDINBURG TX 785429059

CCN: 681700402463

Dear HIDALGO COUNTY:

Every five years, CMS requires you to revalidate your Medicare enrollment record. You need to update or confirm all the information in your record, including your practice locations and reassignments.

We need this from you by **June 30, 2017**.

Failure to respond to this notice will result in a hold on your payments and possible deactivation of your Medicare enrollment. If you are a non-certified provider or supplier and your enrollment is deactivated, you will maintain your original PTAN, however will not be paid for services rendered during the period of deactivation. This will cause a gap in your reimbursement.

What record needs revalidating by June 30, 2017

Provider: HIDALGO COUNTY
NPI: 1932146636
PTAN: PH0021

CMS lists the records that need revalidation at go.cms.gov/MedicareRevalidation.

What you need to do

Revalidate your Medicare enrollment record, through PECOS.cms.hhs.gov, or form CMS-855.

- **Online:** PECOS is the fastest option. If you don't know your username or password, PECOS offers ways to retrieve them. Our customer service can also help you by phone 866-484-8049.
- **Paper:** Download the right version of form CMS-855 for your situation at cms.gov. We recommend getting proof of receipt of your mailing. Mail to the following address:

WRJH - WCU1097G - 004178 - 001 OF 003

Medicare Provider Enrollment
P.O. Box 44137
Jacksonville, FL 32231

If you have a fee due, use PECOS to pay. If you feel you qualify for a hardship waiver, mail us a request on practice letterhead with financial statements, application form, and certification. For more fees and exceptions, search cms.gov for "CR 7350" or "Fee Matrix".

If you need help

Visit go.cms.gov/MedicareRevalidation

Please contact our JH Provider Enrollment Contact Center at 855-252-8782 between the hours of 8:00 A.M. - 4:00 P.M. CT and MT for any questions or visit Novitas-Solution.com for more options.

Sincerely,

Medicare Provider Enrollment

WRJH - WCU1097G - 004178 - 002 OF 003

AI-59919 **Health & Human Services Dept.** **10. I.**

CC - REGULAR

Meeting Date: 05/30/2017

Submitted For: Raul Silguero, HUMAN RESOURCES

Submitted By: Diana Munoz, HUMAN RESOURCES

Department: HUMAN RESOURCES

Information

CAPTION

Requesting consideration of ratification to appoint Michael Anthony Gomez as a Public Health Intern in conjunction with the approved Master Internship Agreement between Texas A & M University and Hidalgo County, to become effective May 16, 2017 for a term ending August 12, 2017.

BACKGROUND

Refer to Agenda Item #59683 approved on May 16, 2017.

Fiscal Impact

CALENDAR YEAR: **ACCT. #:**

FUNDS AVAILABLE Y/N?: **MATCHING FUNDS Y/N?:**

BUDGETARY IMPACT:

No fiscal impact. Interns do not get paid by the County.

Attachments

JOB DESCRIPTION

Waiver

Form Review

Inbox	Reviewed By	Date
Budget & Management	Veronica Ortiz	05/19/2017 08:18 AM
Ivan Cantu	Ivan Cantu	05/19/2017 08:43 AM
Final Approval	Monica Salinas	05/26/2017 02:58 PM
Form Started By: Diana Munoz		Started On: 05/18/2017 03:51 PM
Final Approval Date: 05/26/2017		

Hidalgo County Health and Human Services Dept.
Public Health

Title of Internship
1 position available:
Public Health Intern

Location
Hidalgo County Health and Human Services
1304 S. 25th Ave. Edinburg, TX

Part Time
Part-Time (10-35 hours per week)
M-F, 8am-5pm, depending on applicant's availability

Introduction
Hidalgo County Health and Human Services (HCHHS) is seeking applicants for the Public Health Intern position, whom will complete a one semester appointment at Hidalgo County Health and Human Services. The internships at HCHHSD are unfunded practicum experiences for graduate and undergraduate students in good standing at schools of public health and health related programs in the United States.

The HCHHSD Public Health Internship Program provides an unparalleled opportunity for professional growth and development as a public health practitioner and will prepare the intern to be an ambassador for the important work of HCHHSD in his/her professional discipline, work setting, or community. The intern will have frequent contact with HCHHSD public health experts in the various fields of Public Health. With this internship, the candidate will gain knowledge of Public Health systems, the application of Projects, Education, and a comprehensive understanding of Public Health within the community.

The intern will have an opportunity to participate in training and development activities at HCHHSD that may include:

- Orientation to HCHHSD and government office work
- Attendance to available seminars/webinars, meetings, and conferences
- Shadowing HCHHSD Public Health Staff
- Participation in Public Health-Projects

Program Objectives
The Public Health Preparedness Internship Program at HCHHSD is designed to align with the Hidalgo County's goals and missions, as well as support the individual intern's progress toward a career in public health. To this end the program will:
(1) Develop the public health workforce
(2) Strengthen HCHHSD's partnership with schools of public health and the pipeline of public health and health-related professionals
(3) Orient the future public health workforce to HCHHSD mission, programs, and leadership

Description of Duties
Although specific projects of the Public Health Intern will depend on initiatives within the office of placement during the intern's appointment, the following list provides an idea of the scope and breadth of the intern's work at HCHHSD:

- Participate and work on a variety of Public Health Projects and Grants
- Assist, create, and distribute Public Health Education
- Training on the Health Insurance Portability and Accountability Act (HIPAA)
- Other duties may occur as assigned

Qualifications
Undergraduate/Graduate Student (BS, MPH, MS, etc.) Preferred
GPA of 3.0 or higher (transcript may be requested)
Background in Community Health, Public Health, Public Administration, or Health Policy/Management is a plus.

INTERNSHIP AGREEMENT AND WAIVER OF LIABILITY

I, Michael Gomez, agree to participate in an internship with The County of Hidalgo, Texas , as outlined in this agreement. I hereby certify that I am at least 18 years of age at this time, and I am a student at Texas A&M University.

I hereby agree to comply with all relevant policies, procedures and requirements as outlined in the Hidalgo County Internship Policy and the Personnel Policy Manual I understand that I will not receive compensation for my services provided during the internship period, and that no other benefits will be provided. I understand that my placement and this internship is at-will and that I may be terminated at any time at the discretion of the County.

I hereby voluntarily release, discharge, waive and relinquish any and all action or causes of action for personal injury, property damage, or wrongful death occurring to me as a result of my internship with Hidalgo County. I hereby release, waive, discharge and relinquish any actions or causes of actions aforementioned, which may hereafter arise for me and my estate, and agree that under no circumstances will I prosecute or present any claim for personal injury, property damage or wrongful death against Hidalgo County or any of its agents and employees for any said cause of action, whether the same shall arise by negligence of any said persons, or otherwise. It is my intent by this instrument to exempt and release, indemnify and hold harmless Hidalgo County and any of its employees, its elected or appointed officials, employees and agents for any personal injury, property damage, or wrongful death cause by negligence.

I ACKNOWLEDGE THAT I HAVE READ THE FOREGOING PARAGRAPHS AND HAVE BEEN FULLY AND COMPLETELY ADVISED OF THE POTENTIAL DANGERS INCIDENTAL TO PARTICIPATING IN AN INTERNSHIP AND AM FULLY AWARE OF THE LEGAL CONSEQUENCES OF SIGNING THIS INSTRUMENT.

Michael Gomez
Signature

05/16/17
Date

AI-60014 **Health & Human Services Dept.** **10. J. 2.**

CC - REGULAR

Meeting Date: 05/30/2017

Submitted For: Eddie Olivarez, HEALTH & HUMAN SERVICES DEPT.

Submitted By: Dairen Sarmiento, HEALTH & HUMAN SERVICES DEPT.

Department: HEALTH & HUMAN SERVICES DEPT.

Information

CAPTION

Discussion and update regarding letter in support of the UHRIP Pilot Program.

BACKGROUND

UHRIP program approved on 4/18/17 subject to HHSC approval.

Fiscal Impact

Attachments

letter

Form Review

Inbox	Reviewed By	Date
Budget & Management	Veronica Ortiz	05/25/2017 03:01 PM
Final Approval	Monica Salinas	05/26/2017 02:58 PM

Form Started By: Dairen Sarmiento Started On: 05/25/2017 02:12 PM

Final Approval Date: 05/26/2017

OFFICE OF THE COUNTY JUDGE
County Of Hidalgo

RAMON GARCIA
County Judge

May 18, 2017

Mark Sanders
Chief Executive Officer
Superior Health Plan

Anne Rote
President
Molina Healthcare of Texas

Don Langer
Chief Executive Officer
United Healthcare Community Plan of Texas

Mary Dale Peterson, MD
President & CEO
Driscoll Health Plan

Dear Mr. Sanders, Mr. Langer, Ms. Rote & Dr. Peterson:

I am writing on behalf of Hidalgo County and on behalf of local patients who deserve a strong, robust and efficient healthcare safety-net system. It was brought to our attention that the hospitals in our respective communities are a pursuing the development of a Uniform Hospital Rate Improvement Program ("UHRIP") that would bring in over $40 million of federal money into our communities, *without costing state or local taxpayers a single dollar.* Because these funds would be used to support access, delivery and funding for patients in our communities, our county voted to fund these programs via our Local Provider Participation Funds ("LPPFs").

We were disappointed to learn that accessing the UHRIP payments for our safety-net system was delayed until March 2018, however, we are excited to learn that the managed care organizations ("MCOs") in our community are supportive of pursuing a pilot program for the Hidalgo Service Delivery Area (SDA) that would become effective September 1, 2017. We are grateful that the MCOs are helping support this project and our local safety-net system. It is our understanding that one MCO still has questions. Due to importance of the program to our local communities and to help resolve any outstanding issues, we are eager and happy to discuss your concerns and that of our local patients and community with you as soon as possible.

Our communities need these funds, and it is critical that all parties work out the details as soon as possible. Please let us know how we can facilitate any necessary dialogue.

Regards,

Ramon Garcia

The Honorable Ramon Garcia
Hidalgo County Judge

P.O. Box 1356 ★ Edinburg, Texas 78540 ★ (956) 318-2600 ★ Fax (956) 318-2699

AI-60006 **Executive Office** **11. B.**

CC - REGULAR

Meeting Date: 05/30/2017

Submitted For: David Fuentes, COMM. PCT. #1

Submitted By: Monica Salinas, EXECUTIVE OFFICE

Department: COMM. PCT. #1

Information

CAPTION

Discussion, consideration, and approval for Environmental Compliance Coordinator to submit letter to TCEQ withdrawing application for permit for waste water treatment plant at Delta Lake Park in Pct. 1.

BACKGROUND

Application is being withdrawn since Precinct 1 will be replacing the plant with an OSSF system to serve the restroom facilities at the park.

Fiscal Impact

Attachments

letter

Form Review

Inbox	Reviewed By	Date
Budget & Management	Veronica Ortiz	05/25/2017 11:08 AM
Final Approval	Monica Salinas	05/26/2017 02:58 PM

Form Started By: Monica Salinas Started On: 05/25/2017 11:04 AM

Final Approval Date: 05/26/2017

Hidalgo County Commissioners' Court

Ramon Garcia
County Judge

David L. Fuentes
Commissioner, Precinct 1

Eduardo "Eddie" Cantu
Commissioner, Precinct 2

Joe M. Flores
Commissioner, Precinct 3

Joseph Palacios
Commissioner, Precinct 4

Executive Office

Environmental Compliance Division

Martin Ramirez
Coordinator

2818 S. Business Hwy 281
Edinburg, Texas 78539

(956) 318-2980 | **P**
(956) 292-7034 | **F**
www.co.hidalgo.tx.us | **W**

May 30, 2017

Mr. Julian D. Centeno, Jr., P.E.
TCEQ Wastewater Permitting Section (MC 148)
P.O. Box 13087
Austin, TX 78711-3087

RE: Request to withdraw application for new TPDES Permit # WQ0010973002

Mr. Centeno:

I am requesting the withdraw of the application for TPDES Permit No. WQ0010973002 for the waste water treatment plant at Hidalgo County Delta Lake Park in Precinct # 1 (RN101917748, CN600753990). Hidalgo County Precinct # 1 will be replacing this plant with an OSSF system since this will be more economical to operate due to the number of persons using the park on a regular basis. Please contact me at 956-318-2980 or at my email: martin.ramirez@co.hidalgo.tx.us.

Sincerely

Martin Ramirez

Cc: David Suarez, Pct. 1 Chief Administrator
Saul Garcia, Pct. 1 Director of Field Operations

AI-59962 **Executive Office** **11. C.**

CC - REGULAR

Meeting Date: 05/30/2017

Submitted For: Armando Guzman, SAFETY DIVISION

Submitted By: Aida Alvarez, SAFETY DIVISION

Department: SAFETY DIVISION

Information

CAPTION

Approval to accept settlement check from Fred Loya Insurance Agency in the amount of $2,409.26 to settle property damage claim with County security fence. (Courthouse)

BACKGROUND

DOI: 04/16/16

Acct #: 7-1100-360-00-000-005-0-000

Fiscal Impact

Attachments

Fred Loya Settlement Check

Form Review

Inbox	Reviewed By	Date
Budget & Management	Veronica Ortiz	05/23/2017 02:34 PM
Final Approval	Monica Salinas	05/26/2017 02:58 PM
Form Started By: Aida Alvarez		Started On: 05/23/2017 02:16 PM
Final Approval Date: 05/26/2017		

WARNING – THIS CHECK IS PROTECTED BY SPECIAL SECURITY GUARD PROGRAM™ FEATURES

FRED LOYA INSURANCE AGENCY, INC.
FOR LOYA INSURANCE COMPANY

Frost Bank 30-9/1140
Fort Worth, TX

10538370

CLAIMS ACCOUNT
1800 LEE TREVINO
EL PASO, TEXAS 79936

VOID IF NOT PRESENTED FOR PAYMENT WITHIN 6 MONTHS FROM DATE OF ISSUE.

PAY * TWO THOUSAND FOUR HUNDRED NINE DOLLARS & 26 CENTS----------

TO THE ORDER OF COUNTY OF HIDALGO
9805 N 10TH STREET
MC ALLEN, TX 78504

2,409.26
CHECK AMOUNT

5/09/17

COMMENTS: SUBRO PAYMENT: CLM# 16-04-160750
KGA

AUTHORIZED SIGNATURE

HEAT SENSITIVE
RUB AREA TO VERIFY

THIS CHECK CONTAINS MULTIPLE SECURITY FEATURES – SEE BACK FOR DETAILS

⑈00105383 70⑈ ⑆114000093⑆ 6500167 56⑈

FRED LOYA INSURANCE AGENCY, INC.
FOR LOYA INSURANCE COMPANY
CLAIMS ACCOUNT

DETACH AND RETAIN THIS STATEMENT
THE ATTACHED CHECK IS IN PAYMENT OF THE ITEMS DESCRIBED BELOW.
IF NOT CORRECT PLEASE NOTIFY US PROMPTLY. NO RECEIPT DESIRED.

10538370

DATE	DRAFT#	CLAIM#	POLICY#	AMOUNT
5/09/17	10538370	565 43597	65 535267461	2,409.26

INSURED: IRMA G DIAZ

COUNTY OF HIDALGO
9805 N 10TH STREET
MCALLEN, TX. 78504

Hidalgo County

Department of Safety Division

Recovery Analysis

Date	Employee #	Employee Name	Hourly Rate	Total Hours Worked	Worksite Location	Description of Work Performed	Total Labor Cost
4/16/2016	101788	Daniel Flores	$32.58	4	Courthouse	Installed Temporary Fence	$130.32
4/16/2016	188182	Juan Pablo Saavedra	$16.80	1.5	Courthouse	Installed Temporary Fence	$25.20
4/16/2016	139165	Javier Palacios	$16.80	1.5	Courthouse	Installed Temporary Fence	$25.20
4/19/2016	188930	Isidro Leal Salinas	$18.93	16	Shop	Manufactor/weld new replcement fence	$302.88
4/21/2016	74047	Alejandro Martinez	$12.20	16	Shop	Manufactor/weld new replcement fence	$195.20
4/22/2016	177571	David G. Araiza	$12.88	16	Shop	Manufactor/weld new replcement fence	$206.08
4/28/2016	188930	Isidro Leal Salinas	$18.93	2	Shop	Load/Prep for installation	$37.86
4/28/2016	74047	Alejandro Martinez	$12.20	2	Shop	Load/Prep for installation	$24.40
4/28/2016	177571	David G. Araiza	$12.88	2	Shop	Load/Prep for installation	$25.76
4/29/2016	188930	Isidro Leal Salinas	$18.93	11	Courthouse	Installation & Welding	$208.23
4/29/2016	74047	Alejandro Martinez	$12.20	11	Courthouse	Installation & Welding	$134.20
4/29/2016	177571	David G. Araiza	$12.88	11	Courthouse	Installation & Welding	$141.68
4/29/2016	148296	Paul A. Esquivel	$12.88	2	Courthouse	Helper	$25.76
4/29/2016	89532	Manuel Garcia	$18.82	2	Courthouse	Helper	$37.64
5/2/2016	74047	Alejandro Martinez	$12.20	1.5	Courthouse	Paint & Caliche Work	$18.30
5/2/2016	177571	David G. Araiza	$12.88	1.5	Courthouse	Paint & Caliche Work	$19.32
				101			$1,558.03

ALAMO IRON WORKS
An IDG Industrial Distribution Group Company

INVOICE

INVOICE DATE	INVOICE NO.	PAGE NO.
07/07/16	16111546-00	1
P.O. DATE	P.O. NO.	PLACED BY
06/29/16	745634	SALINAS

CUST.#: 103834

BILL TO: HIDALGO COUNTY BUILDINGS
P. O. BOX 1356
EDINBURG, TX 78539

REMIT TO:
Alamo Distribution, LLC
P.O. Box 848545
Dallas, TX 75284-8545

SHIP TO: HIDALGO COUNTY BUILDINGS
3100 S CLOSNER
956-292-6150
EDINBURG, TX 78539

VIA	SHIPPED	TERMS
Del-OurTruck	07/07/16	Net 30, Cust

INSTRUCTIONS: CALL 1HR AHEAD.

LINE NO.	PRODUCT AND DESCRIPTION	TAX	QUANTITY ORDERED	QUANTITY B.O.	QTY. SHIPPED	QTY. U/M	UNIT PRICE	PRICE U/M	NET EXTENDED AMOUNT
	BUYBOARD VENDOR ID 484. CONTRACTS #501-15, #447-14 & #448-14								
1	499920936773 TBG SQ A513 1 X 1 X 14GA X 24 FT 24.96# ea LIST PRICE: $13.622 10% DISCOUNT	N	28	0	28	LG	12.26000	LG	343.28
2	499920938357 TBG SQ A500 3 X 3 X 3/16 X 20 FT 137.40# ea LIST PRICE: $84.089 10% DISCOUNT	N	3	0	3	LG	75.68000	LG	227.04
3	499920937417 TBG RECT A513 2 X 1 X 14 GA X 24 FT 38.40# ea LIST PRICE: $21.078 10% DISCOUNT	N	6	0	6	LG	18.97000	LG	113.82
4	48105418-80 SGS INDL RED/BROWN ALKYD PRIMER (1 GAL.) HAZARDOUS MATERIALS TRANSPORTATION INFORMATION: UN1263, PAINT, 3, PG-I ERG Page # 128 Hazard Label/Placard FLAMMABLE LIST PRICE: $27.40 10% DISCOUNT	N	1	0	1	GA	24.66000	GA	24.66
5	48105413-10 SGS INDL GLOSS BLK ALKYD PAINT (1 GAL.) HAZARDOUS MATERIALS TRANSPORTATION INFORMATION: UN1263, PAINT, 3, PG-I ERG Page # 128 Hazard Label/Placard FLAMMABLE LIST PRICE: $23.511 10% DISCOUNT	N	2	0	2	GA	21.16000	ga	42.32
6	028876DW8001 DW8001 WHEEL 14X7/64X1 GEN PUR CHOP SAW MET LIST PRICE: $7.933 10% DISCOUNT	N	5	0	5	EA	7.14000	EA	35.70

Continued

Cash Discount

A finance charge of 1 1/2% per month, which is equivalent to an annual percentage rate of 18%, is charged on all outstanding invoices 30 days or more past due.
Prices and discounts subject to change without notice.
IDG Credit Department Email: Invoice@IDG-Corp.com, Phone: 1-877-949-2080
For questions on Terms of Sale, see our website www.IDGSupply.com

ALAMO IRON WORKS
An IDG Industrial Distribution Group Company

INVOICE

INVOICE DATE	INVOICE NO.	PAGE NO.
07/07/16	16111546-00	2
P.O. DATE	P.O. NO.	PLACED BY
06/29/16	745634	SALINAS

CUST.#: 103834

RECEIVED
JUL 11 2016
Facilities Management

BILL TO: HIDALGO COUNTY BUILDINGS
P. O. BOX 1356
EDINBURG, TX 78539

REMIT TO:
Alamo Distribution, LLC
P.O. Box 848545
Dallas, TX 75284-8545

SHIP TO: HIDALGO COUNTY BUILDINGS
3100 S CLOSNER
956-292-6150
EDINBURG, TX 78539

VIA	SHIPPED	TERMS
Del-OurTruck	07/07/16	Net 30, Cust

INSTRUCTIONS: CALL 1HR AHEAD.

LINE NO.	PRODUCT AND DESCRIPTION	TAX	QUANTITY ORDERED	QUANTITY B.O.	QTY. SHIPPED	QTY. U/M	UNIT PRICE	PRICE U/M	NET EXTENDED AMOUNT
7	02385771211 ONE GALLON GENERAL PURP LACQUER THINNER HAZARDOUS MATERIALS TRANSPORTATION INFORMATION: UN1263, PAINT RELATED MATERIAL, 3, PG-II ERG Page # 128 Hazard Label/Placard FLAMMABLE LIST PRICE: $23.756 10% DISCOUNT **********	N	1	0	1	EA	21.38000	EA	21.38
8	47954670002 1 GAL PLASTIC PAINT THINNER-MINERAL SPIRITS HAZARDOUS MATERIALS TRANSPORTATION INFORMATION: UN1263, PAINT RELATED MATERIAL, 3, PG-II ERG Page # 128 Hazard Label/Placard FLAMMABLE LIST PRICE: $14.689 10% DISCOUNT **********	N	1	0	1	EA	13.22000	EA	13.22
9	028876DW4523 DW4523 WHEEL 4-1/2X1/4X5 /8-11 GEN PUR METAL GRIN LIST PRICE: $3.111 10% DISCOUNT **********	N	2	0	2	EA	2.80000	EA	5.60
10	015082ED033497 6011 FLEETWOOD 1/8 ROD WELDING 5LB BX LIST PRICE: $13.453 10% DISCOUNT **********	N	2	0	2	BX	12.10735	BX	24.21

10	Lines Total	Qty Shipped Total	51	Total 851.23
				Shipping & Handling 0.00
				Invoice Total 851.23

-1100-419-40-220-050-0- 610

GOOD SERVICES RECEIVED BY:
Silvia Salinas 7/7/16

INVOICE RECEIVED BY:
Linda Cantu 7/11/16

P.O. 745634

Last Page Cash Discount

A finance charge of 1 1/2% per month, which is equivalent to an annual percentage rate of 18%, is charged on all outstanding invoices 30 days or more past due.
Prices and discounts subject to change without notice.
IDG Credit Department Email: Invoice@IDG-Corp.com, Phone: 1-877-949-2080
For questions on Terms of Sale, see our website www.IDGSupply.com

AI-59963 **Executive Office** **11. D.**

CC - REGULAR

Meeting Date: 05/30/2017

Submitted For: Armando Guzman, SAFETY DIVISION

Submitted By: Aida Alvarez, SAFETY DIVISION

Department: SAFETY DIVISION

Information

CAPTION

Approval to accept settlement check from GEICO County Mutual Insurance Company in the amount of $426.01 to settle auto accident claim with County vehicle. (Constable P3)

BACKGROUND

DOI: 12/15/16

Acct #: 7-1100-360-00-000-005-0-000

Fiscal Impact

Attachments

GEICO Settlement Check

Form Review

Inbox	Reviewed By	Date
Budget & Management	Veronica Ortiz	05/23/2017 02:34 PM
Final Approval	Monica Salinas	05/26/2017 02:58 PM
Form Started By: Aida Alvarez		Started On: 05/23/2017 02:29 PM
Final Approval Date: 05/26/2017		

Detailed Payment Summary

GEICO COUNTY MUTUAL INSURANCE CO
Field Claim Center: 09 Dallas

NO. N 188389719

Date: 05/17/2017

00002157450717010101800804 8

2280 N. GREENVILLE AVE
RICHARDSON, TX 75082-4412

Claim #: 0574507170101018
Date of Loss: 12/15/2016

Claimant Name: Lauro Torres
Insured Name: Eduardo Luis Moreno
Tax ID / SS# /
Atty ADJ Code:
Adjuster Code: H675

Pay To:
Hidalgo County

Hidalgo County/Lauro Torres
9805 N 10Th ST
McAllen Tx 78504-9529

Total Amount:
$******426.01

Payment Type:
LOSS

IP AND FEATURE AND AMOUNT

03 APD $****426.01

In Payment Of
Property Damage Coverage
Attn: Lauro Torres

158979086 00005771 00000001/00000001 00008048/00010000

Visit geico.com

Now, parties involved in a GEICO claim can track the progress of the claim, view damage photos and more at geico.com! *GEICO policyholders can make a payment, change drivers or vehicles and request additional coverages.* Not insured with GEICO? 15 minutes could save you 15% or more on car insurance. Of course, we're also available for policy or claim service 24/7 at 1-800-841-3000.

* These online services are unavailable to Assigned Risk policyholders.

clmschck

PLEASE DETACH AND KEEP FOR YOUR RECORDS

GEICO COUNTY MUTUAL INSURANCE CO
2280 N. GREENVILLE AVE
RICHARDSON, TX 75082-4412

Bank of America
Hartford, CT 06120
51-44
119 CT

NO. N 188389719
VOID AFTER 180 DAYS

Claim Number: 0574507170101018

Claimant:
Lauro Torres

Insured Name:
Eduardo Luis Moreno

Date: 05/17/2017

Feature Symbol & Amount
APD $****426.01

Amount:
$******426.01

FOUR-HUNDRED-TWENTY-SIX*AND*01/100*DOLLARS********

Pay to the Order of:
Hidalgo County

In Payment of:
Property Damage Coverage
Attn: Lauro Torres

Mail To:
Hidalgo County/Lauro Torres
9805 N 10Th ST
McAllen Tx 78504-9529

Hallis White

⑈188389719⑈ ⑆011900445⑆ 0000000191941⑈

GEICO

geico region 5
SUPPS TO:
partners.geico.com/gvbps/Logon.aspx
VISIT US AT WWW.GEICO.COM
RIO GRANDE VALLEY
MCALLEN, TX 78501
Phone: (956) 391-4307
Fax: (855) 559-6878

Claim #: 0574507170101018-03
Workfile ID: 33629a40

Estimate of Record

Written By: GENEROSO TREVINO, 2/21/2017 10:25:08 AM
Adjuster: CDG3

Insured:	Eduardo Moreno	Owner Policy #:		Claim #:	0574507170101018-03
Type of Loss:	Liability	Date of Loss:	12/15/2016 07:30 AM	Days to Repair:	2
Point of Impact:	06 Rear	Deductible:			

Owner (Claimant):
Lauro Torres
9805 N 10th St
Mcallen, TX 78504
(956) 292-7030 Business

Inspection Location:
Constables Department
Constables Department
730 N. Breyfogle Road
Mission, TX 78572
Other
(956) 581-6800 Day

Appraiser Information:
gtrevino@geico.com
(956) 391-4307

Repair Facility:
UNKNOWN AT THIS TIME

VEHICLE

2015 CHEV Tahoe Commercial (Fleet) 4D UTV 8-5.3L Gasoline Direct Injection tan

VIN:	1GNLC2EC2FR531456	Production Date:		Interior Color:	
License:	1223063	Odometer:	19302	Exterior Color:	tan
State:	TX	Condition:			

TRANSMISSION
Automatic Transmission
Overdrive
POWER
Power Steering
Power Brakes
Power Windows
Power Locks
Power Mirrors
Heated Mirrors
Power Driver Seat
Power Passenger Seat
DECOR
Dual Mirrors
Tinted Glass
Air Conditioning
Intermittent Wipers
Tilt Wheel
Cruise Control
Rear Defogger
Keyless Entry
Alarm
Message Center
Rear Window Wiper
Climate Control
Dual Air Condition
Parking Sensors
RADIO
AM Radio
FM Radio
Search/Seek
CD Player
Auxiliary Audio Connection
SAFETY
Drivers Side Air Bag
Passenger Air Bag
Anti-Lock Brakes (4)
4 Wheel Disc Brakes
Traction Control
Stability Control
Front Side Impact Air Bags
Head/Curtain Air Bags
Communications System
Hands Free Device
Positraction
Cloth Seats
Bucket Seats
Reclining/Lounge Seats
3rd Row Seat
WHEELS
Styled Steel Wheels
PAINT
Clear Coat Paint
Metallic Paint
TRUCK
Trailer Hitch
Trailering Package
Running Boards/Side Steps

Estimate of Record

2015 CHEV Tahoe Commercial (Fleet) 4D UTV 8-5.3L Gasoline Direct Injection tan

Line		Oper	Description	Part Number	Qty	Extended Price $		Labor	Paint
1	#		Restore Corrosion Protection		1	10.00	T	0.2	
2	**LIFT GATE**								
3	*	Rpr	Lift gate	23345546				4.0	1.3
4	*		Add for Clear Coat						0.9
5		R&I	Handle	23339223				0.4	
6		R&I	Upper trim black	84067085				Incl.	
7		R&I	Lower trim panel w/o power lift gate black	23440134				0.6	
8	#	Subl	CONSTABLE STICKER/ID NUMBER		1	50.00	X		
9	**OTHER CHARGES**								
10	#		E.P.C.		1	2.50			
				SUBTOTALS		**62.50**		**5.2**	**2.2**

NOTES

Prior Damage Notes:
rt fender ding
ft bmpr rck chips
hood rck chips

ESTIMATE TOTALS

Category	Basis		Rate	Cost $
Parts				0.00
Body Labor	5.2 hrs	@	$ 40.00 /hr	208.00
Paint Labor	2.2 hrs	@	$ 40.00 /hr	88.00
Paint Supplies	2.2 hrs	@	$ 28.00 /hr	61.60
Miscellaneous				60.00
Other Charges				2.50
Subtotal				420.10
Sales Tax	$ 71.60	@	8.2500 %	5.91
Total Cost of Repairs				**426.01**
Total Adjustments				**0.00**
Net Cost of Repairs				**426.01**

MyPriceLink Estimate ID: 263336729400893440

AI-60028 **Human Resources** **12. A.**

CC - REGULAR

Meeting Date: 05/30/2017

Submitted For: Raul Silguero, HUMAN RESOURCES

Submitted By: Diana Munoz, HUMAN RESOURCES

Department: HUMAN RESOURCES

Information

CAPTION

WIC - Food Summer Program (1292):
1. Discussion, consideration, and approval to create the following part-time temporary positions not to exceed 9 weeks, effective June 19, 2017:

Action	Dept./ Program	Position Title	Slot #	Budgeted Salary/ Hourly Rate
Create	350-020	Referral Resource Specialist I	T009	$3,240.00/yr. - $12.00/hr.
Create	350-020	Referral Resource Specialist I	T010	$3,240.00/yr - $12.00/hr.

2. Approval of intradepartmental transfer.

BACKGROUND

Fiscal Impact

CALENDAR YEAR: 2017 **ACCT. #:** 7-1292-441-00-350-020-7-XXX

FUNDS AVAILABLE Y/N?: Y **MATCHING FUNDS Y/N?:** N

BUDGETARY IMPACT:

Funds available; intradepartmental transfer.

Attachments

Fiscal Note
Transfer
par

Form Review

Inbox	Reviewed By	Date
Budget & Management	Veronica Ortiz	05/25/2017 04:52 PM
Final Approval	Monica Salinas	05/26/2017 02:58 PM
Form Started By: Diana Munoz		Started On: 05/25/2017 04:42 PM
Final Approval Date: 05/26/2017		

HIDALGO COUNTY
Department of Budget & Management
FISCAL NOTE

•Fiscal notes are prepared by the Department of Budget & Management to present the budgetary impact of requests by departments/offices or of new proposals that were not approved during the budget process.

To: Commissioner' Court
From: Sergio Cruz, Budget Officer
CC Date: Tuesday, May 30, 2017 Agenda Item: 60028

Summary of request/proposal:
WIC Summer Food (1292): Approval of the following personnel actions, effective 6/19/17:

Fund	Position	Slot #	Obj	Current Budgeted Salary Allowance	Proposed Budgeted Salary/ Allowance	Total Requested
1292	Referral Resource Specialist	T259	122	0.00	3,240.00	3,240.00
1292	Referral Resource Specialist	T260	122	0.00	3,240.00	3,240.00
				0.00	6,480.00	6,480.00

Budgetary Impact:

INCREASE/DECREASE ACCOUNT NUMBER		ACCOUNT (OBJECT) NAME		AMOUNT
7-1292-441-00-350-020-7-	122	WIC SUMMER FOOD-	TEMP P/T EMPLOYEES	$6,480.00
7-1292-441-00-350-001-7-	211	WIC SUMMER FOOD-	HEALTH INSURANCE	$0.00
7-1292-441-00-350-001-7-	212	WIC SUMMER FOOD-	LIFE INSURANCE	$0.00
7-1292-441-00-350-001-7-	220	WIC SUMMER FOOD-	FICA	$495.72
7-1292-441-00-350-001-7-	230	WIC SUMMER FOOD-	RETIREMENT	$0.00
7-1292-441-00-350-001-7-	250	WIC SUMMER FOOD-	UNEMPLOYMENT COMP	$38.88
7-1292-441-00-350-001-7-	260	WIC SUMMER FOOD-	WORKER'S COMP	$60.91
			2017 Budgetary Impact	$7,075.51

Possible Funding Sources: Intradepartmental Transfer

Comments:

Hidalgo Co. Budget Office
2/3/2005

DATE: May 30, 2017

2017
Transfer

AI-60028

DEPARTMENT HEAD: Sergio Cruz, Budget Officer

DEPARTMENT NAME: Department of Budget & Management for WIC

ACCOUNT NUMBER: 7-1292-441-00-350-020-7-XXX

Contact Person: Debbie Tamez **Ph#:** (956) 292-7025 Ext. 5427

SUBJECT: **Intradepartmental transfer(s)** (increase (decrease)) in accordance with Local Government Code, Chapter 111, § 111.070, Item C (2).

Honorable Commissioners' Court of Hidalgo County:

I would like to request the following Intradepartmental transfer(s) (increase (decrease)) in accordance with Local Government Code, Chapter 111, § 111.070, Item C (2).

FROM OBJECT CODE	OBJECT DESCRIPTION	**TO** OBJECT CODE	OBJECT DESCRIPTION	**AMOUNT**
610	General Supplies	122	Temp F/T Employees	6,480.00
610	General Supplies	220	FICA	495.72
610	General Supplies	250	Unemployment Comp	38.88
610	General Supplies	260	Workers Comp	60.91
			TOTAL	$ 7,075.51

REASON:
Transfer needed to fund personnel action, AI-60028, CC 05/30/17.

DEPARTMENT HEAD SIGNATURE

DATE

APPROVED COMMISSIONERS' COURT

ATTEST COUNTY CLERK

HIDALGO COUNTY
Personnel Adjustment Request Form

RECEIVED
MAY 25 2017
HUMAN RESOURCES

DEPARTMENT NAME/NUMBER: WIC/350 -020 **DATE:** 05/30/2017

CURRENT POSITION TITLE: **CURRENT SLOT. #:** ~~G009-010~~ T009 T010

REQUESTED POSITION TITLE: REFERRAL RESOURCE SPECIALIST I
(For new positions or reclassifications)

REQUEST FOR:

☐ New Position ☑ Temporary Position ☐ Position Reclassification* ☐ Other _____

*Civil Service Positions are submitted to the Civil Service Commission.

POSITION SALARY REQUEST:

Salary Amount: $ 0 (Current Budgeted Salary) $ 3,240x2=6,480 (Proposed Budgeted Salary) $ ~~0~~ 6480.00 (Net Change) DM.

Position to be funded from one of the following:

☐ Current Department Budget ☐ Annual Budget Cycle ☐ Will Require Additional Funds

☑ Other Summer Food Program Grant / 7-1292-441-00-350-020-7-122

POSITION Type:

Full Time Employee Object 113 ☐ Part Time Employee Object 114 ☐

Full Time Temporary Object 121 ☐ Part Time Temporary Object 122 ☑

Enter hourly rate for temp. positions
$ 12x30=360x9=3,240
Hourly Rate * 2,080 hrs. per year = Annual Salary

TEMPORARY POSITIONS:

06/19/2017	08/18/2017	5 days 6hrs a day	30	9 weeks
Start Date	End Date	Working Days & Hours	Hours Per Week	Duration (2 weeks, 3 months, etc.)

CIVIL SERVICE:		FLSA:	
Exempt	☐	Exempt	☐
Non-Exempt	☑	Non-Exempt	☐
N/A	☐		

JUSTIFICATION/PRIORITY: (Explain why this position or adjustment request is essential)

Position needed for summer food program for 9 weeks

NEW POSITION: Brief job description and attach a copy of the new job description.

See job description attached.

POSITION RECLASIFICATION: Explain change and /or increase in duties and responsibility. (Attach new job description)

ADDITIONAL DUTIES: Explain reason for additional duties and attach list of additional duties.

COMMENTS: (Any comments you wish to make regarding this request)

HUMAN RESOURCES: Classification and Salary Recommendation

BUDGET & MANAGEMENT: Classification and Salary Recommendation

1.	DEPARTMENT HEAD	DATE 5/25/17	FUNDING AVAILABLE IN DEPT. BUDGET	☑ YES	☐ NO
2.	sdfgsdfg HUMAN RESOURCES DIRECTOR	DATE 5/30/17	PERSONNEL PROCEDURES COMPLETED	☑ YES	☐ NO
3.	DEPARTMENT OF BUDGET & MANAGEMENT	DATE 5/30/17	BUDGET PROCEDURES COMPLETED	☑ YES	☐ NO
4.	COMMISSIONERS COURT APPROVAL	DATE			

AI-60019 **Human Resources** **12. B.**

CC - REGULAR

Meeting Date: 05/30/2017

Submitted For: Raul Silguero, HUMAN RESOURCES

Submitted By: Diana Munoz, HUMAN RESOURCES

Department: HUMAN RESOURCES

Information

CAPTION

Sheriff's Office (1100):
1. Requesting waiver of the Budget Amendment Policy - Personnel - Related Amendments.
2. Approval of the following personnel action in accordance with Section 9.14 of the Civil Service Commission Rules, effective 5/22/17:

Action	Employee No.	Slot No.	Dept./ Program	Current Position Title	Current Budgeted Salary	Proposed Position Title	Proposed Budgeted Salary
Reclassification	143502	0114	280-001	Senior Deputy Sheriff Step II	$51,068.00	Sergeant Step II	$61,290.00

BACKGROUND

As per the Civil Service Commission Order dated May 18, 2017.

Fiscal Impact

CALENDAR YEAR: 2017 **ACCT. #:** 7-1100-421-00-280-001-0-XXX

FUNDS AVAILABLE Y/N?: Y **MATCHING FUNDS Y/N?:** N

BUDGETARY IMPACT:

Funds available from within.

Attachments

Order
PAR
Fiscal Note
Salary Analysis

Form Review

Inbox	Reviewed By	Date
Budget & Management	Veronica Ortiz	05/26/2017 11:30 AM
Final Approval	Monica Salinas	05/26/2017 02:58 PM
Form Started By: Diana Munoz		Started On: 05/25/2017 02:55 PM

Final Approval Date: 05/26/2017

HIDALGO COUNTY
CIVIL SERVICE COMMISSION

IN THE MATTER OF	§	**1116-S-D-016**
Emp. # 143502 [redacted]	§	

ORDER OF THE COMMISSION

On May 18, 2017, the above referenced matter was taken for consideration by the Hidalgo County Civil Service Commission. Pursuant to Civil Service Commission Rule 9.14, the Commission ruled to **REVERSE** the decision of the HIDALGO COUNTY SHERIFF'S OFFICE. The HIDALGO COUNTY SHERIFF'S OFFICE is hereby instructed to:

1. Reinstate GRIEVANT to his previous rank and pay with no additional probation.
2. Not issue back pay or fringe benefits to GRIVANT.
3. Seal GRIVANT's probation resulting from the demotion.

5-23-17

Chairperson Michelle Rabinovich Date
Hidalgo County Civil Service Commission

5-23-2017

Vice Chairperson Jaime Ortiz Date
Hidalgo County Civil Service Commission

Commissioner Julian Ybarra Date
Hidalgo County Civil Service Commission

HIDALGO COUNTY
Personnel Adjustment Request Form

RECEIVED
MAY 26 2017
HUMAN RESOURCES

DEPARTMENT NAME/NUMBER: SHERIFF'S OFFICE / 280 – 001 **DATE:** 5-25-2017

CURRENT POSITION TITLE: ~~SR.~~ Senior DEPUTY SHERIFF STEP II **CURRENT SLOT. #:** 001-114

REQUESTED POSITION TITLE: SERGEANT STEP II
(For new positions or reclassifications)

REQUEST FOR:

☐ New Position ☐ Temporary Position ☑ Position Reclassification* ☑ Other Please see attached orders

*Civil Service Positions are submitted to the Civil Service Commission.

POSITION SALARY REQUEST:

Salary Amount: $ 51,068.00 (Current Budgeted Salary) $ 61,290.00 (Proposed Budgeted Salary) $ 10,222.00 (Net Change)

Position to be funded from one of the following:

☐ Current Department Budget ☐ Annual Budget Cycle ☐ Will Require Additional Funds

☑ Other Please see attached Civil Service Commission Orders

POSITION Type:

Full Time Employee Object 113 ☑ Part Time Employee Object 114 ☐

Full Time Temporary Object 121 ☐ Part Time Temporary Object 122 ☐ $ _____ Enter hourly rate for temp. positions

Hourly Rate * 2,080 hrs. per year = Annual Salary

TEMPORARY POSITIONS:

Start Date	End Date	Working Days & Hours	Hours Per Week	Duration (2 weeks, 3 months, etc.)

CIVIL SERVICE:		FLSA:	
Exempt	☐	Exempt	☐
Non-Exempt	☑	Non-Exempt	☑
N/A	☐		

JUSTIFICATION/PRIORITY: (Explain why this position or adjustment request is essential)

Please see attached Civil Service Commission Orders.

NEW POSITION: Brief job description and attach a copy of the new job description.

POSITION RECLASIFICATION: Explain change and /or increase in duties and responsibility. (Attach new job description)

COMMENTS: (Any comments you wish to make regarding this request)

HUMAN RESOURCES: Classification and Salary Recommendation

BUDGET & MANAGEMENT: Classification and Salary Recommendation

1.	DEPARTMENT HEAD	5-24-17 DATE	FUNDING AVAILABLE IN DEPT. BUDGET	☑ YES	☐ NO
2.	HUMAN RESOURCES DIRECTOR	5/24/17 DATE	PERSONNEL PROCEDURES COMPLETED	☑ YES	☐ NO
3.	DEPARTMENT OF BUDGET & MANAGEMENT	5/24/17 DATE	BUDGET PROCEDURES COMPLETED	☑ YES	☐ NO
4.	COMMISSIONERS COURT APPROVAL	DATE			

HIDALGO COUNTY
Department of Budget & Management
FISCAL NOTE

•Fiscal notes are prepared by the Department of Budget & Management to present the budgetary impact of requests by departments/offices or of new proposals that were not approved during the budget process.

To: Commissioner' Court
From: Sergio Cruz, Budget Officer
CC Date: Tuesday, May 30, 2017 Agenda Item: 60019

Summary of request/proposal:
Sheriff's Office (1100): Approval of the following personnel action, effective 05/22/17:

Fund	Position	Slot #	Obj	Current Budgeted Salary Allowance	Proposed Budgeted Salary/ Allowance	Total Requested
1100	Sergeant Step II	0114	113	51,068.00	61,290.00	10,222.00
				51,068.00	61,290.00	10,222.00

Budgetary Impact:

INCREASE/DECREASE ACCOUNT NUMBER		ACCOUNT (OBJECT) NAME		AMOUNT
7-1100-421-00-280-001-0-	113	SHERIFF-	REG F/T EMPLOYEES	$6,290.46
7-1100-421-00-280-001-0-	211	SHERIFF-	HEALTH INSURANCE	$0.00
7-1100-421-00-280-001-0-	212	SHERIFF-	LIFE INSURANCE	$0.00
7-1100-421-00-280-001-0-	220	SHERIFF-	FICA	$481.22
7-1100-421-00-280-001-0-	230	SHERIFF-	RETIREMENT	$721.52
7-1100-421-00-280-001-0-	250	SHERIFF-	UNEMPLOYMENT COMP	$37.74
7-1100-421-00-280-001-0-	260	SHERIFF-	WORKER'S COMP	$196.26
			2017 Budgetary Impact	$7,727.20

2018 Budgetary Impact $12,556.70

Possible Funding Sources: Funds available from within.

Comments:

Hidalgo Co. Budget Office
2/3/2005

Sheriff's Office

Salaries Analysis Worksheet

as of 05/25/17

Acct No: 7-1100-421-00-280-001-0-XXX Sheriff's Office

BUDGETED

Object Code	Acct. Description	2017 Total Budgeted Salary	Payroll Amount per Pay Period	PP Remaining	Remaining Estimated Salaries per Year	Available Balance	Availability
113	Regular Full-Time	$16,601,636.00	$638,524.46	16.5	$10,535,653.62	$10,558,167.71	$22,514.09
220	FICA	$1,337,525.97	$51,443.31	16.5	$848,814.56	$874,598.84	$25,784.28
250	Unemployment	$104,019.22	$4,000.74	16.5	$66,012.20	$76,472.26	$10,460.06
260	Workers Comp	$476,315.00	$18,319.81	16.5	$302,276.83	$303,488.43	$1,211.60
TOTAL		**$18,519,496.19**	**$712,288.32**	**-**	**$11,752,757.20**	**$11,812,727.24**	**$59,970.04**

Please note:

Longevity pay & Health Ins = 24 pay periods (twice a month)
Life Ins = 12 pay periods (once a month)
All others = 26 pay periods

AI-59739 **Human Resources** **12. C.**

CC - REGULAR

Meeting Date: 05/30/2017

Submitted For: Raul Silguero, HUMAN RESOURCES

Submitted By: Diana Munoz, HUMAN RESOURCES

Department: HUMAN RESOURCES

Information

CAPTION

Sheriff's Office (1100):
1. Requesting waiver of the Budget Amendment Policy - Personnel - Related Amendments.
2. Discussion, consideration, and approval of the following personnel actions effective next full pay period 6/12/2017:

Action	Slot#	Dept. / Program	Current/Proposed Position Title	Proposed Budgeted Allowance
Clothing allowance (add)	0154	280-001	Deputy Sheriff Step I	$500.00
Clothing allowance (add)	0178	280-001	Deputy Sheriff Step I	$500.00
Clothing allowance (add)	0218	280-001	Deputy Sheriff Step I	$500.00

BACKGROUND

Fiscal Impact

CALENDAR YEAR: 2017 **ACCT. #:** 7-1100-421-00-280-001-0-XXX

FUNDS AVAILABLE Y/N?: Y **MATCHING FUNDS Y/N?:** N

BUDGETARY IMPACT:

Funds available as of 5/19/17.

Attachments

Fiscal Note
PAR FORM

Form Review

Inbox	Reviewed By	Date
Budget & Management	Veronica Ortiz	05/12/2017 08:33 AM
Human Resources	Diana Munoz	05/19/2017 10:57 AM
Budget & Management	Veronica Ortiz	05/19/2017 11:09 AM
Final Approval	Monica Salinas	05/26/2017 02:58 PM
Form Started By: Diana Munoz		Started On: 05/05/2017 04:39 PM

Final Approval Date: 05/26/2017

HIDALGO COUNTY
Department of Budget & Management
FISCAL NOTE

•Fiscal notes are prepared by the Department of Budget & Management to present the budgetary impact of requests by departments/offices or of new proposals that were not approved during the budget process.

To: Commissioner' Court
From: Sergio Cruz, Budget Officer
CC Date: Tuesday, May 30, 2017 Agenda Item: 59739

Summary of request/proposal:
Sheriff (1100)-
Approval of the following personnel actions, effective 06/12/17:

Fund	Position	Slot #	Obj	Current Budgeted Salary Allowance	Proposed Budgeted Salary/ Allowance	Total Requested
1100	Deputy Sheriff Step I	0154	119	0.00	500.00	500.00
1100	Deputy Sheriff Step I	0178	119	0.00	500.00	500.00
1100	Deputy Sheriff Step I	0218	119	0.00	500.00	500.00
				0.00	1,500.00	1,500.00

Budgetary Impact:

INCREASE/DECREASE ACCOUNT NUMBER		ACCOUNT (OBJECT) NAME		AMOUNT
7-1100-421-00-280-001-0-	119	SHERIFF-	CLOTHING ALLOWANCE	$836.54
7-1100-421-00-280-001-0-	211	SHERIFF-	HEALTH INSURANCE	$0.00
7-1100-421-00-280-001-0-	212	SHERIFF-	LIFE INSURANCE	$0.00
7-1100-421-00-280-001-0-	220	SHERIFF-	FICA	$64.00
7-1100-421-00-280-001-0-	230	SHERIFF-	RETIREMENT	$95.95
7-1100-421-00-280-001-0-	250	SHERIFF-	UNEMPLOYMENT COMP	$5.02
7-1100-421-00-280-001-0-	260	SHERIFF-	WORKER'S COMP	$26.10
			2017 Budgetary Impact	$1,027.61

2018 Budgetary Impact: $1,842.60

Possible Funding Sources: Funds available

Comments:

HIDALGO COUNTY
Personnel Adjustment Request Form

RECEIVED
MAY 02 2017
HUMAN RESOURCES

DEPARTMENT NAME/NUMBER: SHERIFF'S OFFICE / 280-001 **DATE:** 5-2-2017

CURRENT POSITION TITLE: DEPUTY SHERIFF STEP I **CURRENT SLOT. #:** 001-178/001-154 001-218

REQUESTED POSITION TITLE:
(For new positions or reclassifications)

REQUEST FOR:

☐ New Position ☐ Temporary Position ☐ Position Reclassification* ☑ Other to add clothing allowances

*Civil Service Positions are submitted to the Civil Service Commission.

POSITION SALARY REQUEST:

Allowance
~~Salary~~ Amount: $ Ø (Current Budgeted ~~Salary~~) $ 500.00X3 = $1,500.00 (Proposed Budgeted ~~Salary~~ Allowance) $ 500.00X3=$1,500.00 (Net Change Allowance)

Position to be funded from one of the following:

☑ Current Department Budget ☐ Annual Budget Cycle ☐ Will Require Additional Funds

☐ Other _____

POSITION Type:

Full Time Employee Object 113 ☑ Part Time Employee Object 114 ☐ _____

Full Time Temporary Object 121 ☐ Part Time Temporary Object 122 ☐ $ _____ Enter hourly rate for temp. positions

Hourly Rate * 2,080 hrs. per year = Annual Salary

TEMPORARY POSITIONS:

Start Date	End Date	Working Days & Hours	Hours Per Week	Duration (2 weeks, 3 months, etc.)

CIVIL SERVICE:		FLSA:	
Exempt	☐	Exempt	☐
Non-Exempt	☑	Non-Exempt	☑
N/A	☐		

JUSTIFICATION/PRIORITY: (Explain why this position or adjustment request is essential)

To add clothing allowances.

NEW POSITION: Brief job description and attach a copy of the new job description.

POSITION RECLASIFICATION: Explain change and /or increase in duties and responsibility. (Attach new job description)

COMMENTS: (Any comments you wish to make regarding this request)

HUMAN RESOURCES: Classification and Salary Recommendation

BUDGET & MANAGEMENT: Classification and Salary Recommendation

1.	DEPARTMENT HEAD	DATE 5/2/17	FUNDING AVAILABLE IN DEPT. BUDGET	☑ YES	☐ NO
2.	HUMAN RESOURCES DIRECTOR	DATE 5/19/2017	PERSONNEL PROCEDURES COMPLETED	☑ YES	☐ NO
3.	DEPARTMENT OF BUDGET & MANAGEMENT	DATE 5/22/17	BUDGET PROCEDURES COMPLETED	☑ YES	☐ NO
4.	COMMISSIONERS COURT APPROVAL	DATE			

AI-60004 **Human Resources** **12. D.**

CC - REGULAR

Meeting Date: 05/30/2017

Submitted For: Raul Silguero, HUMAN RESOURCES

Submitted By: Diana Munoz, HUMAN RESOURCES

Department: HUMAN RESOURCES

Information

CAPTION

Precinct #3 - Road Maintenance (1200):

1. Approval to create one (1) full time temporary position not to exceed six (6) months, effective June 26, 2017 through December 24,2017, as follows:

Slot No.	Dept./Program	Position Title	Proposed Budgeted Salary
T108	123-005	Administrative Assistant IV	$19,685.00/yr.

2. Approval of intradepartmental transfer.

BACKGROUND

Fiscal Impact

CALENDAR YEAR: 2017 **ACCT. #:** 7-1200-431-00-123-005-0-1XX

FUNDS AVAILABLE Y/N?: Y **MATCHING FUNDS Y/N?:** N

BUDGETARY IMPACT:

Funds available; intradepartmental transfer.

Attachments

Fiscal Note

Transfer

PAR

Salary Analysis

Form Review

Inbox	Reviewed By	Date
Budget & Management	Veronica Ortiz	05/25/2017 10:37 AM
Final Approval	Monica Salinas	05/26/2017 02:58 PM
Form Started By: Diana Munoz		Started On: 05/25/2017 10:21 AM
Final Approval Date: 05/26/2017		

HIDALGO COUNTY
Department of Budget & Management
FISCAL NOTE

•Fiscal notes are prepared by the Department of Budget & Management to present the budgetary impact of requests by departments/offices or of new proposals that were not approved during the budget process.

To: Commissioner' Court
From: Sergio Cruz, Budget Officer
CC Date: Tuesday, May 30, 2017 Agenda Item: 60004

Summary of request/proposal:
Pct3 Rd Maint (1200):
Approval of the following personnel actions, effective 06/26/17:

Fund	Position	Slot #	Obj	Current Budgeted Salary Allowance	Proposed Budgeted Salary/ Allowance	Total Requested
1200	Administrative Assistant IV	T108	121	0.00	19,685.00	19,685.00
				0.00	19,685.00	19,685.00

Budgetary Impact:

INCREASE/DECREASE ACCOUNT NUMBER		ACCOUNT (OBJECT) NAME		AMOUNT
7-1200-431-00-123-005-0-	121	PCT3 RD MAINT-	TEMP F/T EMPLOYEES	$19,685.00
7-1200-431-00-123-005-0-	211	PCT3 RD MAINT-	HEALTH INSURANCE	$0.00
7-1200-431-00-123-005-0-	212	PCT3 RD MAINT-	LIFE INSURANCE	$0.00
7-1200-431-00-123-005-0-	220	PCT3 RD MAINT-	FICA	$1,505.90
7-1200-431-00-123-005-0-	230	PCT3 RD MAINT-	RETIREMENT	$0.00
7-1200-431-00-123-005-0-	250	PCT3 RD MAINT-	UNEMPLOYMENT COMP	$118.11
7-1200-431-00-123-005-0-	260	PCT3 RD MAINT-	WORKER'S COMP	$41.34
			2017 Budgetary Impact	$21,350.35

Possible Funding Sources: Intradepartmental Transfer

Comments:

DATE: May 30, 2017

2017
Transfer

AI-60004

DEPARTMENT HEAD: Sergio Cruz, Budget Officer

DEPARTMENT NAME: Department of Budget & Management for Pct. 3 Rd Maintenance

ACCOUNT NUMBER: 7-1200-431-00-123-005-0-1XX

Contact Person: Debbie Tamez **Ph#:** (956) 292-7025 Ext. 5427

SUBJECT: **Intradepartmental transfer(s)** (increase (decrease)) in accordance with Local Government Code, Chapter 111, § 111.070, Item C (2).

Honorable Commissioners' Court of Hidalgo County:

I would like to request the following Intradepartmental transfer(s) (increase (decrease)) in accordance with Local Government Code, Chapter 111, § 111.070, Item C (2).

FROM OBJECT CODE	OBJECT DESCRIPTION	TO OBJECT CODE	OBJECT DESCRIPTION	AMOUNT
113	Reg F/T Employees	121	Temp F/T Employees	19,685.00
			TOTAL	$ 19,685.00

REASON:
Transfer needed to fund personnel action, AI-600041, CC 05/30/17.

DEPARTMENT HEAD SIGNATURE

/ /
DATE

APPROVED COMMISSIONERS' COURT

ATTEST COUNTY CLERK

HIDALGO COUNTY
Personnel Adjustment Request Form

RECEIVED
MAY 23 2017
HUMAN RESOURCES

DEPARTMENT NAME/NUMBER: Precinct #3 Road Maintenance (123.005) DATE: 5/22/2017

CURRENT POSITION TITLE: N/A CURRENT SLOT #: ~~T-005-0108~~ T108

REQUESTED POSITION TITLE: ~~Adm. Asst.~~ Administrative Assistant IV

REQUEST FOR:

☐ New Position ☒ Temporary Position ☐ Position Reclassification* ☐ Other _____

* Civil Service Positions are submitted to the Civil Service Commission.

POSITION SALARY REQUEST:

Salary Amount:

$ 0.00	$ 19,685.00	$ 19,685.00
Current G&S/ Budgeted Salary	Proposed G&S/ Budgeted Salary	Net Change

Position to be funded from one of the following:

☒ Current Department Budget ☐ Annual Budget Cycle ☐ Will Require Additional Funds

☐ Other _____

POSITION Type:

Full Time Employee Object 113 ☐ Part Time Employee Object 114 ☐ $18.93 Enter hourly rate for temp. positions

Full Time Employee Temporary Object 121 ☒ Part Time Temporary Object 122 ☐ $ 18.93 x 1040 = $19,685.00 Hourly Rate "2,080 hrs. per year = Annual Salary

TEMPORARY POSITIONS:

~~Jun-17~~ 6/24/2017	~~Dec. 2017~~ 12/24/2017	Mon. - Fri	40	6 Months ~~or No Longer Dec. 31, 2017~~
Start Date	End Date	Working Days & Hours	Hours Per Week	Duration (2 weeks, 3 months, etc.)

CIVIL SERVICE:
Exempt ☑
Non-Exempt ☐
N/A ☒

FLSA:
Exempt ☐
Non-Exempt ☑

JUSTIFICATION/PRIORITY: (Explain why this position or adjustment request is essential)

Position is needed to assist in several office duties due to department's high demand of workload.

NEW POSITION: Brief job description and attach a copy of the new job description.

Copy attached.

POSITION RECLASSIFICATION: Explain change and/or increase in duties and responsibility. (Attach new job description)

COMMENTS: (Any comments you wish to make regarding this request)

HUMAN RESOURCES: Classification and Salary Recommendation

ADMINISTRATIVE ASSISTANT IV GRADE 10/1

BUDGET & MANAGEMENT: Classification and Salary Recommendation

1.	DEPARTMENT HEAD	5/23/17 Date	FUNDING AVAILABLE IN DEPT. BUDGET	☐	YES	☐ NO
2.	HUMAN RESOURCES DIRECTOR	5/25/2017 Date	PERSONNEL PROCEDURES COMPLETED	☑	YES	☐ NO
3.	DEPARTMENT OF BUDGET & MANAGEMENT	5/26/17 Date	BUDGET PROCEDURES COMPLETED	☑	YES	☐ NO
4.	COMMISSIONERS' COURT APPROVAL	Date				

Pct. 3 Rd Maintenance

Salaries Analysis Worksheet

as of 05/25/17

Acct No: 7-1200-431-00-123-005-0-XXX Pct. 3 Rd Maintenance

BUDGETED

Object Code	Acct. Description	2017 Total Budgeted Salary	Payroll Amount per Pay Period	PP Remaining	Remaining Estimated Salaries per Year	Available Balance	Availability
113	Regular Full-Time	$2,644,103.00	$101,696.27	16.5	$1,677,988.44	$1,766,063.38	$88,074.94
220	FICA	$205,054.43	$7,886.71	16.5	$130,130.70	$140,296.63	$10,165.93
230	Retirement	$307,447.62	$11,824.91	16.5	$195,110.99	$205,491.74	$10,380.75
250	Unemployment	$16,082.70	$618.57	16.5	$10,206.33	$12,187.62	$1,981.29
260	Workers Comp	$134,492.00	$5,172.77	16.5	$85,350.69	$86,115.60	$764.91
TOTAL		**$3,307,179.75**	**$127,199.22**	**-**	**$2,098,787.15**	**$2,210,154.97**	**$111,367.82**

Please note:

Longevity pay & Health Ins = 24 pay periods (twice a month)
Life Ins = 12 pay periods (once a month)
All others = 26 pay periods

AI-60026 **Urban County** **13. A.**

CC - REGULAR

Meeting Date: 05/30/2017

Submitted For: Olga Lerma, URBAN COUNTY

Submitted By: Olga Lerma, URBAN COUNTY

Department: URBAN COUNTY

Information

CAPTION

Approval of a Proclamation declaring June 2017 Home Ownership Month within the County of Hidalgo

BACKGROUND

In observation of National Homeownership Month and in order to raise public awareness on how to become a homeowner, the Urban County Program is requesting approval to declare June 2017 Homeownership Month within the County of Hidalgo.

The UCP would also like to announce that Affordable Homes of South Texas Inc. (AHSTI), in conjunction with the City of McAllen, is sponsoring their 179h Annual Homebuyer's Fair that will take place on Saturday, June 10, 2017 at the McAllen Convention Center from 9:00 am to 4:00 pm. This fair is free to the public. If anyone would like additional information on the Homebuyer's Fair, they may contact AHSTI at 956-687-6263.

Fiscal Impact

Attachments

proclamation

Form Review

Inbox	Reviewed By	Date
Budget & Management	Veronica Ortiz	05/25/2017 04:50 PM
Final Approval	Monica Salinas	05/26/2017 02:58 PM
Form Started By: Olga Lerma		Started On: 05/25/2017 04:36 PM
Final Approval Date: 05/26/2017		

PROCLAMATION DECLARING JUNE 2017
AS HOME OWNERSHIP MONTH

WHEREAS, home ownership enhances lives and contributes to thriving communities throughout Hidalgo County, the State of Texas, and the United States of America; and

WHEREAS, raising awareness about the importance of homeownership will assist more Americans in realizing the benefits of owning their own home; and

WHEREAS June has been proclaimed as National Homeownership Month, reinforcing the long-held belief that owning a home remains one of the cornerstones of the American Dream; and

WHEREAS, the U.S. Department of Housing and Urban Development continues to enforce the Fair Housing Act, to ensure that every American retains the fundamental right to choose where he or she lives, raises a family or owns a home.

NOW, THEREFORE, BE IT RESOLVED that the Hidalgo County Commissioners Court does hereby proclaim the month of June 2017 as Home Ownership Month and urges all citizens to join us in recognizing that home ownership plays an important role in our community.

Approved this 30th day of May, 2017.

RAMON GARCIA
County Judge

DAVID L. FUENTES
County Commissioner, Pct. 1

EDUARDO "EDDIE" CANTU
County Commissioner, Pct. 2

JOE M. FLORES
County Commissioner, Pct. 3

JOSEPH PALACIOS
County Commissioner, Pct. 4

Attest: ARTURO GUAJARDO, JR.
County Clerk

AI-59934 **Urban County** **13. B.**

CC - REGULAR

Meeting Date: 05/30/2017

Submitted For: Olga Lerma, URBAN COUNTY

Submitted By: Olga Lerma, URBAN COUNTY

Department: URBAN COUNTY

Information

CAPTION

Requesting approval of a program amendment for the City of La Villa FY's 26 & 29 (2013 & 2016) work plans. Fiscal year 2013: will modify the current scope of work of a 100,000 gallon elevated water storage tank to a 200,000 gallon. Fiscal year 2016: will delete the current scope of work and add the construction of a 200,000 gallon elevated water storage tank.

BACKGROUND

A Public Hearing was held on May 10, 2017 at 6:15 p.m. and citizen participation requirements have been met. The City of La Villa approved the program amendment for its FY's 26 & 29 (2013 & 2016):

FYs 26 (2013)

Modify the current scope of work which consists of: the construction of a 100,000 gallon elevated water storage tank to a 200,000 gallon elevated water storage tank. This project was previously environmentally cleared in FY 2014 & 2015.

FY 29 (2016)
Delete the following scope of work: Project will consist of the upgrade to the main lift station, reroute force main and manholes (from brick to a liner system) located throughout the city and;

Add the construction of a 200,000 gallon elevated water storage tank, which will also include High Service Pumps, piping, connectivity and inclusion to the existing SCADA system. Other expenditures include professional engineering service fees, geo-technical and construction material testing and any related appurtenances as it pertains to the project completion. This project was previously environmentally

cleared in FY 2014 & 2015.

Fiscal Impact

Attachments

City of La Villa Public Notice & Board Meeting

Form Review

Inbox	Reviewed By	Date
Budget & Management	Veronica Ortiz	05/22/2017 09:54 AM
Final Approval	Monica Salinas	05/26/2017 02:58 PM
Form Started By: Olga Lerma		Started On: 05/19/2017 04:18 PM
Final Approval Date: 05/26/2017		

PUBLIC HEARING NOTICE * *AVISO DE AUDIENCIA PÚBLICA*
CITY OF LA VILLA * *CIUDAD DE LA VILLA*

URBAN COUNTY PROGRAM
PROGRAMA URBANO DEL CONDADO DE HIDALGO

Publication Date: Friday, March 31, 2017
Fecha de publicación: viernes 31 de marzo del 2017

PROGRAM AMENDMENT * ENMIENDA DEL PROGRAMA

In compliance with the Community Development Block Grant (CDBG) requirements, the City of La Villa will conduct a Public Hearing to solicit input from interested parties on the City's proposed Program Amendment to its Urban County Program funding Years 26 & 29 (2013 & 2016) utilizing its original work plans.

En conformidad con los requisitos del Programa de Desarrollo Comunitario Concesión de Bloque (CDBG), la Ciudad de La Villa llevará a cabo una audiencia pública para solicitar la opinión de aquellos interesados en la propuesta y enmienda de la ciudad del programa Urbano del Condado de Hidalgo de los años de financiamiento 26 & 29 (2013 & 2016).

The Public Hearing will be held on **Wednesday, May 10, 2017 at 6:15 p.m.** at the La Villa City Hall located at **916 S. Mike Chapa, La Villa, Texas 78562**

*La audiencia pública se llevará a cabo el **Miércoles, 10 de mayo 2017 a las 6:15 p.m.** en la siguiente ubicación: Municipalidad de Alamo, **916 S. Mike Chapa, La Villa, Texas 78562***

The following is the proposed Program Amendment for your consideration:

La siguiente es la Enmienda del Programa para su consideración:

Existing Budget	**Urban County Year 26 (2013)**	**Proposed Budget**
$ 389.05	Water/Sewer Improvements (*Mejoras de Agua/Alcantarilla)*	$ 389.05

The proposed amendment will **modify** the current scope of work which consists of: the construction of a 100,000 gallon elevated water storage tank to a 200,000 gallon elevated water storage tank.

La enmienda propuesta modificará el alcance actual del trabajo que consistió en: la construcción de un tanque elevado de almacenamiento de agua de 100,000 galones a un tanque elevado de almacenamiento de agua de 200,000 galones.

Existing Budget	**Urban County Year 29 (2016)**	**Proposed Budget**
$195,975.00	Water/Sewer Improvements (*Mejoras de Agua/Alcantarilla)*	$195,975.00

The proposed amendment will **delete** the following scope of work**:** Project will consist of the upgrade to the main lift station, reroute force main and manholes (from brick to a liner system) located throughout the city. The proposed amendment will **add** the following scope of work: the construction of a 200,000 gallon elevated water storage tank, which will also include High Service Pumps, piping, connectivity and inclusion to the existing SCADA system. Other expenditures include professional engineering service fees, geo-technical and construction material testing and any related appurtenances as it pertains to the project completion. This project was previously environmentally cleared in FY 2014 & 2015.

*La enmienda propuesta eliminará el siguiente ámbito de trabajo: El proyecto consistirá en la mejora de la estación principal de elevación, la redirección de la fuerza principal y los pozos de inspección (de ladrillo a un sistema de revestimiento) ubicados en toda la ciudad. La enmienda propuesta **agregara** lo siguiente: El proyecto consistirá en la construcción de un tanque elevado de almacenamiento de agua de 200,000 galones, que también incluirá a las bombas de alto servicio, tuberías, conexión y la inclusión al sistema existente SCADA. Otros gastos incluyen los honorarios profesionales de servicios de ingeniería, pruebas de geo-técnica y material de construcción y cualquier accesorio relacionados en lo que respecta a la finalización del proyecto. Este proyecto fue anteriormente despejado ambientalmente en los años 2014 y 2015.*

Accommodations for individuals with handicaps shall be provided upon request.
Alojamiento para las personas con discapacidad se puede proporcionar a petición.

For more information, please come by the office or call (956) 262-2122. Written comments may be forwarded to:
Para obtener más información, por favor venga a la oficina o llame al (956) 262-2122. Los comentarios escritos pueden enviarse a:

Mayor/Alcalde Alma Moron
City of La Villa
916 S. Mike Chapa
La Villa, Texas 78562

10004864 - Urban County Program - 30041246

THE MONITOR

PUBLISHER'S AFFIDAVIT

State of Texas
County of Hidalgo

Annais Vallejo being duly Sworn on his/her oath states that he/she is a Sales Representative of THE MONITOR and that the attached notice appeared in the following issues:

March 31, 2017

Subscribed and sworn to before me this the 31st day of March A.D. 2017.

Norma I. Barras
Notary Public, Hidalgo County

NORMA I BARRAS
Notary ID # 128747846
My Commission Expires
September 22, 2019

RECEIVED
APR - 7 2017
Urban County Program

RECEIVED
APR 7 2017
FINANCE DIVISION

PUBLIC HEARING NOTICE * AVISO DE AUDIENCIA PÚBLICA
CITY OF LA VILLA * CIUDAD DE LA VILLA

URBAN COUNTY PROGRAM
PROGRAMA URBANO DEL CONDADO DE HIDALGO

Publication Date: Friday, March 31, 2017
Fecha de publicación: viernes, 31 de marzo del 2017

PROGRAM AMENDMENT * *ENMIENDA DEL PROGRAMA*

In compliance with the Community Development Block Grant (CDBG) requirements, the City of La Villa will conduct a Public Hearing to solicit input from interested parties on the City's proposed Program Amendment to its Urban County Program funding Years 26 & 29 (2013 & 2016) utilizing its original work plans.

En conformidad con los requisitos del Programa de Desarrollo Comunitario Concesión de Bloque (CDBG), la Ciudad de La Villa llevará a cabo una audiencia pública para solicitar la opinión de aquellos interesados en la propuesta y enmienda de la ciudad del programa Urbano del Condado de Hidalgo de los años de financiamiento 26 & 29 (2013 & 2016).

The Public Hearing will be held on **Wednesday, May 10, 2017 at 6:15 p.m.** at the La Villa City Hall located at **916 S. Mike Chapa, La Villa, Texas 78562**

*La audiencia pública se llevará a cabo el **Miércoles, 10 de mayo 2017 a las 6:15 p.m.** en la siguiente ubicación: Municipalidad de Alamo, **916 S. Mike Chapa, La Villa, Texas 78562***

The following is the proposed Program Amendment for your consideration:
La siguiente es la Enmienda del Programa para su consideración:

Existing Budget	Urban County Year 26 (2013)	Proposed Budget
$389.05	Water/Sewer Improvements (Mejoras de Agua/Alcantarilla)	$389.05

The proposed amendment will modify the current scope of work which consists of: the construction of a 100,000 gallon elevated water storage tank to a 200,000 gallon elevated water storage tank.

La enmienda propuesta modificará el alcance actual del trabajo que consistió en: la construcción de un tanque elevado de almacenamiento de agua de 100,000 galones a un tanque elevado de almacenamiento de agua de 200,000 galones.

Existing Budget	Urban County Year 29 (2016)	Proposed Budget
$195,975.00	Water/Sewer Improvements (Mejoras de Agua/alcantarilla)	$195,975.00

The proposed amendment will **delete** the following scope of work: Project will consist of the upgrade to the main lift station, reroute force main and manholes (from brick to a liner system) located throughout the city. The proposed amendment will **add** the following scope of work: the construction of a 200,000 gallon elevated water storage tank, which will also include High Service Pumps, piping, connectivity and inclusion to the existing SCADA system. Other expenditures include professional engineering service fees, geo-technical and construction material testing and any related appurtenances as it pertains to the project completion. This project was previously environmentally cleared in FY 2014 & 2015.

*La enmienda propuesta **eliminará** el siguiente ámbito de trabajo: El proyecto consistirá en la mejora de la estación principal de elevación, la redirección de la fuerza principal y los pozos de inspección (de ladrillo a un sistema de revestimiento) ubicados en toda la ciudad. La enmienda propuesta **agregara** lo siguiente: El proyecto consistirá en la construcción de un tanque elevado de almacenamiento de agua de 200,000 galones, que también incluirá a las bombas de alto servicio, tuberías, conexión y la inclusión al sistema existente SCADA. Otros gastos incluyen los honorarios profesionales de servicios de ingeniería, pruebas de geo-técnica y material de construcción y cualquier accesorio relacionados en lo que respecta a la finalización del proyecto. Este proyecto fue anteriormente despejado ambientalmente en los años 2014 y 2015.*

Accommodations for individuals with handicaps shall be provided upon request.

Alojamiento para las personas con discapacidad se puede proporcionar a petición.

For more information, please come by the office or call (956) 262-2122. Written comments may be forwarded to:

Para obtener más información, por favor venga a la oficina o llame al (956) 262-2122. Los comentarios escritos pueden enviarse a:

Mayor/Alcalde Alma Moron
City of La Villa
916 S. Mike Chapa
La Villa, Texas 78562

RECEIVED
MAY 16 2017
Urban County
Program
DR

CITY OF LA VILLA
BOARD OF ALDERMEN
PUBLIC HEARING
WEDNESDAY, MAY 10, 2017

THE BOARD OF ALDERMEN OF THE CITY OF LA VILLA, TEXAS MET FOR A PUBLIC HEARING ON WEDNESDAY, MAY 10, 2017 AT 6:15 P.M. AT CITY HALL LOCATED AT 916 S. MIKE CHAPA BLVD., LA VILLA, TEXAS. THE FOLLOWING ARE THE MINUTES OF THAT PUBLIC HEARING.

1. Mayor Moron called the public hearing to order at 6:15 p.m.

2. Present for the Public Hearing are as follow: Mayor Moron, Mayor Pro-Tem Manuel Hinojosa, Alderman Jorge Lopez, Alderman Joe Contreras, Alderman Mario Lopez and Alderman David Palomin

3. Mayor Moron informed the Board of the item that was on the Public Hearing Agenda. The item are as follow: Public Hearing on Proposed Program Amendments UCP Years 26 (2013) and 29 (2016)

Mayor Moron opened the Public Hearing for Urban County Program amendment for Years 26 (2013) and 29 (2016). Mayor Moron asked Mr. Amaro to read aloud the public hearing notice that had been published in the newspaper. Mr. Amaro informed the Board that all the money would be going to finish the elevated storage tank project. Being that there was no more discussion, Mayor Moron asked if there were any more questions and being that there wasn't Mayor Moron closed the public hearing.

4. Mayor Moron called a motion to adjourn at 6:24 p.m.

RECEIVED
MAY 16 2017
Urban County Program
DR

CITY OF LA VILLA
BOARD OF ALDERMEN
REGULAR MEETING
WEDNESDAY, MAY 10, 2017

THE BOARD OF ALDERMEN OF THE CITY OF LA VILLA, TEXAS MET FOR A REGULAR MEETING ON WEDNESDAY, MAY 10, 2017 AT 6:30 P.M. AT CITY HALL LOCATED AT 916 S. MIKE CHAPA BLVD., LA VILLA, TEXAS. THE FOLLOWING ARE THE MINUTES OF THAT MEETING.

ITEM 1. Call Meeting to Order

Mayor Moron called the meeting to order at 6:30 p.m.

ITEM 2. Roll Call

Mayor Moron conducted roll call, the following members and staff were present:

Present: Mayor Alma Moron
Mayor Pro-Tem Manuel Hinojosa
Alderman Joe Contreras
Alderman Jorge Lopez
Alderman David Palomin
Alderman Mario Lopez

Staff Members: Arnie Amaro, City Administrator, Robert Salinas, City Attorney, Betty Rodriguez, Water Billing Clerk, Victor Garcia Police Chief and David Alaniz, Operation Manager

ITEM 3. Mayor Moron led the Board in the Pledge of Allegiance

ITEM 4. Mr. Amaro prayed a short prayer

ITEM 9. Discussion and Appropriate Action on Approving UCP Program Amendment for Years 26 (2013) and 29 (2016)

Mayor Moron informed the Board that this item was discussed in the public hearing that was held tight before the regular meeting. Mayor Moron entertained a motion to approve the Urban County Program amendment for years 26 (2013) and 29 (2016). Alderman Jorge Lopez moved and was seconded by Alderman Manuel Hinojosa. All in favor, motion carried.

CITY OF LA VILLA
URBAN COUNTY PROGRAM
PROGRAM AMENDMENT YRS 26 & 29 PUBLIC HEARING

RECEIVED
MAY 16 2017
Urban County Program
JR

Place: La Villa City Hall
916 Mike Chapa Drive, La Villa, TX 78562
Date: 5/10/2017
Time: 6:15 P.M.

NAME	ADDRESS	PHONE NO.
Arnie Amaro	P.O. Box 646 La Villa	(956) 262-2122
Mario Lopez	P.O. Box 583 La Villa, Tx	434-227-8795
Joe Contreras	P.O. Box 256 La Villa, TX	(956) 373-1123
Manuel M Hinojosa	P.O. Box 557 La Villa, Tx.	(956) 956-1231
Alma Morón	P.O Box 54, La Villa, tx	956-793-8318
David Palomin	P.O. Box 596, La Villa, Tx	956-355-3433
Jorge L Lopez Jr	P.O. Box 182 La Villa, Tx	956-355-3936
Robert J. Salinas	419 N. 12th Donna, Tx	956-464-2460
Adolfo Flores Jr	1200 W. Nolana Ave, Apt 68, Mcallen, TX	956-404-3483
Victor Garcia	PO Box 358 La Villa TX	956 532-2728
Betty Rodriguez	PO Box 591 La Villa Tx	956-564-2559
Krystal Garcia	P.O. Box 560 La Villa Tx	956-280-2896
J Garcia	PO Box 560 LAVILLA TX	956-[illegible]57-9449
Adam Saldivar	P.O. Box 305 La Villa, TX	956-499-6666
David Perez Alaniz	P.O. Box 561, La Villa, Tx	956-351-1247
Lupita Suenez	P.O. Box 60 La Villa, TX.	(956) 792-3408

AI-59911 **Fire Marshal's Office** **14. A.**

CC - REGULAR

Meeting Date: 05/30/2017

Submitted For: Sulema Cavazos, FIRE MARSHAL'S DEPT.

Submitted By: Sulema Cavazos, FIRE MARSHAL'S DEPT.

Department: FIRE MARSHAL'S DEPT.

Information

CAPTION

Requesting approval to process the following invoice as a claim with authority for County Treasurer to issue payment after review, audit, and processing procedures are completed by County Auditor.

VENDOR	INVOICE #	INVOICE DATE	AMOUNT
THE PRODUCTIVITY CENTER, INC.	HCFM0081515	01/05/2015	$317.00
		Total	$317.00

BACKGROUND

Invoice for TCLEDDS (Texas Commission Law Enforcement Data Distribution Center) subscription for web-based software application renewal for March 2015-March 2016 is being submitted as a claim due to no PO ever issued.

Fiscal Impact

CALENDAR YEAR: 2017 **ACCT. #:** 7-1100-422-10-300-001-0-XXX

FUNDS AVAILABLE Y/N?: Y **MATCHING FUNDS Y/N?:**

BUDGETARY IMPACT:

Funding available as of 5/18/17.

Attachments

invoice-tcledds

Form Review

Inbox	Reviewed By	Date
Budget & Management	Veronica Ortiz	05/17/2017 10:51 AM
Final Approval	Monica Salinas	05/26/2017 02:58 PM
Form Started By: Sulema Cavazos		Started On: 05/17/2017 10:28 AM
Final Approval Date: 05/26/2017		

THE PRODUCTIVITY CENTER, INC.
9800 Richmond Ave.
Suite 400
Houston, TX 77042
USA

Voice: 713-939-9777
Fax: 713-939-9099

INVOICE

Invoice Number: **HCFM0081515**
Invoice Date: Jan 5, 2015
Page: 1

PAST DUE

RECEIVED
APR 17 2017
Hidalgo County
Fire Marshal's Office

Bill To:	Ship to:
HIDALGO CO. FIRE MARSHAL 1615 SOUTH CLOSNER STE. H EDINBURG, TX 78539	HIDALGO CO. FIRE MARSHAL 1615 SOUTH CLOSNER STE. H EDINBURG, TX 78539

Customer ID	Customer PO	Payment Terms	
HCFM008		Net 30 Days	
Sales Rep ID	**Shipping Method**	**Ship Date**	**Due Date**
			2/4/15

Quantity	Item	Description	Unit Price	Amount
1.00		TCLEDDS SUBSCRIPTION RENEWAL FEE FOR MARCH 2015 - MARCH 2016 (CATEGORY C)	317.00	317.00

PAST DUE

Subtotal	317.00
Sales Tax	
Total Invoice Amount	317.00
Payment/Credit Applied	
TOTAL	**317.00**

Check/Credit Memo No:

PAST DUE

AI-59707 **IT Department** **15. A.**

CC - REGULAR

Meeting Date: 05/30/2017

Submitted For: Renan Ramirez, IT DEPARTMENT

Submitted By: Griselda Salazar, IT DEPARTMENT

Department: IT DEPARTMENT

Information

CAPTION

COMMISSIONER PCT. 1

Authorization and approval to purchase new wireless gps service through the County's membership/participation with CONTRACT: DIR-TSO-3415 with VERIZON WIRELESS for the following:

Qty:	Description:	User:	Service Plan:
30	Data Plan for GPS	Office Use	Machine to Machine Account Share 5MB @ $7.00 each/per month
90	Data Plan for GPS	Office Use	Machine to Machine Account Share 1MB @ $5.00 each/per month

BACKGROUND

Fiscal Impact

CALENDAR YEAR: 2017 **ACCT. #:** 7-1200-431-00-121-005-0-532

FUNDS AVAILABLE Y/N?: Y **MATCHING FUNDS Y/N?:**

BUDGETARY IMPACT:

Funding available as of 5/17/2017 through req#341877.

Attachments

Backup documents

Form Review

Inbox	Reviewed By	Date
Budget & Management	Veronica Ortiz	05/17/2017 01:49 PM
Budget & Management	Veronica Ortiz	05/17/2017 01:49 PM
Final Approval	Monica Salinas	05/26/2017 02:58 PM
Form Started By: Griselda Salazar		Started On: 05/04/2017 04:06 PM
Final Approval Date: 05/26/2017		

WIRELESS DEVICE REQUEST FORM W.2011.2

TYPE OF REQUEST

County Owned Wireless Device:	Wireless Data Device:	Stipend:
☑ Office Use *or* ☐ Individual	☐ Data Card	☐ Cellular Telephone $50/mo
☐ Name Change	☐ Blackberry	☐ Data Pad $25/mo
☐ Equipment Change	☑ Other: GPS Service	
☐ Plan Change		
☐ Delete Service		

COUNTY OWNED WIRELESS DEVICE

Office Use / Employee: Fleet Employee ID#___ Signature:___

Department: Pct 1 Road Maint. Dept#: 121

Quantity: 120

Service: $210 /mo (x) 12 months = 2,520.00 Account: 7-1200-431-00-121-005-0 -532

Service: $450 /mo (x) 12 months = 5,400.00 Account: 7-1200-431-00-121-005-0-~~619/664~~ 532

Requisition Total: $7,920.00 **Requisition Number:** 341877

STIPEND

(1) Employee:___ Employee ID#___ Signature:___

Department:___ Dept#:___

Quantity:___

Service: $___/mo (x) ___ months = ___ Account:___ -532

Total:___

(2) Elected Official/Department Head Authorization for Request:

Signature	Print Name	Date
D2	David C Fuentes	5-3-17

(3) Executive Office Authorization (Commissioner's Court Departments Only):

Signature	Print Name	Date

(4) IT DEPARTMENT ONLY:

Service Type Codes: (30) Machine to Machine Account Share 5MB @$7.00 each
(90) Machine to Machine Account Share 1MB @$5.00 each

Commissioner's Court Action: **Commissioner's Court Date:** ___

☐ **Approved Date:** ___ ☐ **Disapproved**

Current County cell phone policy stipulates that employees that have cell phones assigned to them will be taxed the value of the service. Please see the following IRS document for more information: http://www.irs.gov/govt/fslg/article/0,,id=167154,00.html, EXAMPLE 2.

Revised: 03/09/2011

REQ # 341877

STATE OF TEXAS DIR CONTRACT NO. DIR-TSO-3415
WIRELESS TELECOM PROPOSAL FOR WIRELESS VOICE, DATA SERVICES AND EQUIPMENT

WIRELESS PROPOSAL FOR: Hidalgo County
SERVICE PLAN, CALLING FEATURES, AND EQUIPMENT QUOTES

QUOTE ID 175115115
DATE 5/1/2017
TERM Annual (12 Months)

RATE PLAN AND FEATURES

RATE PLAN - SHARE	Line Count	Discounted Monthly Access	Plan Included Minutes	Included TEXT / PIX / FLIX	Included Data	Total Shared Minutes	Voice Overage	Monthly Cost	Term Cost
		$0.00						$0.00	$0.00
		$0.00						$0.00	$0.00
		$0.00						$0.00	$0.00
		$0.00						$0.00	$0.00
		$0.00						$0.00	$0.00
								$0.00	$0.00

RATE PLAN - NON SHARE	Line Count	Discounted Monthly Access	Plan Included Minutes	Included TEXT / PIX / FLIX	Included Data		Voice Overage	Monthly Cost	Term Cost
		$0.00						$0.00	$0.00
		$0.00						$0.00	$0.00
		$0.00						$0.00	$0.00
		$0.00						$0.00	$0.00
		$0.00						$0.00	$0.00
								$0.00	$0.00

RATE PLAN - MOBILE BROADBAND	Line Count	Discounted Monthly Access		Included TEXT / PIX / FLIX	Included Data		Data Overage	Monthly Cost	Term Cost
		$0.00						$0.00	$0.00
		$0.00						$0.00	$0.00
		$0.00						$0.00	$0.00
		$0.00						$0.00	$0.00
		$0.00						$0.00	$0.00
								$0.00	$0.00

MACHINE TO MACHINE	Line Count	Discounted Monthly Access			Included Data	Shared Data / Group	Data Overage	Monthly Cost	Term Cost
MACHINE TO MACHINE ACCOUNT SHARE 5MB $0.0009765/KB $7.00 (M2M ASH)	30	$7.00			5 MB	150 MB / Low Usage	$1 / MB	$210.00	$2,520.00
MACHINE TO MACHINE ACCOUNT SHARE 1MB $0.0009765/KB $5.00 (M2M ASH)	90	$5.00			1 MB	90 MB / Low Usage	$1 / MB	$450.00	$5,400.00
		$0.00						$0.00	$0.00
		$0.00						$0.00	$0.00
		$0.00						$0.00	$0.00
	120							$660.00	$7,920.00

FEATURES	Line Count	Discounted Monthly Access						Monthly Cost	Term Cost
		$0.00						$0.00	$0.00
		$0.00						$0.00	$0.00
		$0.00						$0.00	$0.00
		$0.00						$0.00	$0.00
		$0.00						$0.00	$0.00
								$0.00	$0.00

RATE PLANS AND FEATURES - ESTIMATED COST FOR TERM [Annual (12 Months)]: $7,920.00

SEE SECOND PAGE FOR EQUIPMENT COSTS AND TOTALS

REQ # 341877

EQUIPMENT AND ACCESSORIES

QUARTERLY DEVICE PROMOTIONS	Line Count	Cost per Unit	Subtotal
		$0.00	$0.00
		$0.00	$0.00
		$0.00	$0.00
		$0.00	$0.00
		$0.00	$0.00
		$0.00	$0.00
			$0.00

DEVICE	Line Count	Cost per Unit	Subtotal
		$0.00	$0.00
		$0.00	$0.00
		$0.00	$0.00
		$0.00	$0.00
		$0.00	$0.00
		$0.00	$0.00
			$0.00

Eligible accessories receive a 35% discount

ACCESSORIES AND FULL-RETAIL (NO CONTRACT) EQUIPMENT	Line Count	Cost per Unit	Cost per Unit after Discount	Subtotal
			$0.00	$0.00
			$0.00	$0.00
			$0.00	$0.00
			$0.00	$0.00
			$0.00	$0.00
			$0.00	$0.00
				$0.00

EQUIPMENT AND ACCESSORIES ESTIMATED COST	$0.00

INVESTMENT ESTIMATE	Monthly	Term Total
RATE PLAN AND FEATURES ESTIMATED COST FOR TERM [Annual (12 Months)]:	$660.00	$7,920.00
EQUIPMENT AND ACCESSORIES ESTIMATED COST:		$0.00
INVESTMENT TOTAL		$7,920.00

2Q17 BUSINESS BILL INCENTIVE CREDIT (BIC) PROMOTIONS	Line Count	BIC Amount	BIC Total
		$0.00	$0.00
		$0.00	$0.00
		$0.00	$0.00
		$0.00	$0.00
		$0.00	$0.00
			$0.00

QUOTE ID 17511-111

Additional Notes:

* Charge does not include roaming charges, minutes used over allowance, etc. Please consult with your Sales Representative for more information.
** Equipment pricing and availability is subject to change.
*** All applicable price plan and feature discounts have already been applied

Service Pricing provided is for Government Liability Accounts Only and is subject to the terms, provisions and conditions of the State of Texas Department of Information Resources (DIR) Contract No. DIR-TSO-3415 Coverage, service and offers not available in all areas. Full terms and conditions, along with additional price plans offered by Verizon Wireless can be found on the http://www.dir.state.tx.us/ internet website. Price quotes do not reflect Federal Universal Service E911 and Regulatory Fees, charges, or pass-through assessments. Please see information on Regulatory Surcharges and Fees below for additional details.

All quotes contained in this proposal are subject to the terms and conditions of the State of Texas DIR contract. Your account must be in good standing with Verizon wireless to migrate your existing lines of service to the pricing offered in this proposal if your Agency currently has service with Verizon Wireless.

Price Plan changes and discounts may take up to two bill cycles to appear on your Verizon Wireless billing statement for accounts transitioning to an approved State of Texas contract vehicle. As part of our compliance with FCC requirements, Verizon Wireless allows only GPS-compliant devices to be activated on our network. If your current device is not GPS-compliant you will not be able to activate service on our network with your existing equipment.

This Quotation is valid for ninety (90) days from date listed on quote (except for promotional pricing which may expire sooner). Data furnished in this document shall not be duplicated, used, or disclosed in whole or in part for any purpose other than to evaluate the document.

Updated 04/03/2017

Requisition

Req # 00341877

PO #

Date: 05/03/17

Bill To: x
x

Vendor : 287024
VERIZON WIRELESS
P.O. BOX 660108
DALLAS TX 75266-0108

Ship To: HIDALGO CO. PCT 1
1902 Joe Stephens Ave
WESLACO TX 78596

Contact: DAVIDS/AMYS
956-968-8733

Contract No: DIR-TSO-3415

Special Instructions:
RRC163

QUANTITY	UOM	DESCRIPTION	UNIT PRICE	AMOUNT
		DIR-TSO-3415 EXP: 4-27-20 CC APPROVAL ON 05/16/2017, AI-59707 DO NOT DUPLICATE ORDER		
12.00	EACH	CO MACHINE TO MACHINE ACCOUNT SHARE 5MB. 30 UNITS X $7.00 = $210.00	210.00	2,520.00
12.00	EACH	CO MACHINE TO MACHINE ACCOUNT SHARE 1MB 90 UNITS X $5.00 = $450.00	450.00	5,400.00
		Account No	Encumbrance	
		7-1200-431-00-121-005-0-532	7,920.00	
			Freight	.00
			Total	7,920.00
		QUOTE ID# 1751151115		
		REPORT ROAD HAZARDS 1-866-HCR-SAFE OR 1-866-427-7233		

Authorized By: _____

AI-59888 **Head Start** **16. A.**

CC - REGULAR

Meeting Date: 05/30/2017

Submitted For: Edmundo Garcia, HEAD START **Submitted By:** Linda Galaviz, HEAD START

Department: HEAD START

Information

CAPTION

Discussion/Approval of Program Calendars for Program Year 2017-2018

BACKGROUND

Policy Council Approval: 05.17.17

Fiscal Impact

Attachments

Program Calendars 2017-2018

Form Review

Inbox	Reviewed By	Date
Budget & Management	Veronica Ortiz	05/19/2017 10:31 AM
Final Approval	Monica Salinas	05/26/2017 02:58 PM
Form Started By: Linda Galaviz		Started On: 05/16/2017 09:27 AM
Final Approval Date: 05/26/2017		

Hidalgo County Head Start Program

Policy Council Regular Agenda

DATE: May 17, 2017

SUBJECT: Discussion/Approval to the Program Calendars for Program Year 2017-2018

RATIONALE/NEED: Administration has worked collaboratively with the partnering school districts to align their instructional days with our Program.

RECOMMENDATION: Administration recommends approval.

COST: N/A

RELATED INFORMATION INCLUDES: Program Calendars

****

INITIATED BY: Nora S. Munoz, Assistant Director for Programmatic Services

REVIEWED BY: Teresa Flores, Executive Director

EXECUTIVE DIRECTOR'S APPROVAL: Teresa Flores

H. C. H. S. P.

2017-2018 PROGRAM CALENDAR

AUGUST

M	T	W	T	F
	1	2	3	4
7	8	9	10	11
14	15	16	17	18
21	22	23	24	25
28	29	30	31	

SEPTEMBER

M	T	W	T	F
				1
4	5	6	7	8
11	12	13	14	15
18	19	20	21	22
25	26	27	28	29

OCTOBER

M	T	W	T	F
2	3	4	5	6
9	10	11	12	13
16	17	18	19	20
23	24	25	26	27
30	31			

NOVEMBER

M	T	W	T	F
		1	2	3
6	7	8	9	10
13	14	15	16	17
20	21	22	23	24
27	28	29	30	

DECEMBER

M	T	W	T	F
				1
4	5	6	7	8
11	12	13	14	15
18	19	20	21	22
25	26	27	28	29

JANUARY

M	T	W	T	F
1	2	3	4	5
8	9	10	11	12
15	16	17	18	19
22	23	24	25	26
29	30	31		

FEBRUARY

M	T	W	T	F
			1	2
5	6	7	8	9
12	13	14	15	16
19	20	21	22	23
26	27	28		

MARCH

M	T	W	T	F
			1	2
5	6	7	8	9
12	13	14	15	16
19	20	21	22	23
26	27	28	29	30

APRIL

M	T	W	T	F
2	3	4	5	6
9	10	11	12	13
16	17	18	19	20
23	24	25	26	27
30				

MAY

M	T	W	T	F
	1	2	3	4
7	8	9	10	11
14	15	16	17	18
21	22	23	24	25
28	29	30	31	

JUNE

M	T	W	T	F
				1
4	5	6	7	8
11	12	13	14	15
18	19	20	21	22
25	26	27	28	29

FIRST / LAST DAY OF SCHOOL

PROGRAM ACTIVITIES

PROGRAM HOLIDAYS

RECRUITMENT DAYS

PROGRAM ACTIVITIES

08/01-10/2017 Pre Service
08/21-24/2017 Parent Orientation Mtg.
08/28/2017 First Day of School
08/31/2017 Networking Meeting
09/05-07/2017 Volunteer Trng. Conf.
09/23/2017 Parent Leadership Conf.
10/11/2017~3/21/2018 Open House
10/21-22/2017 Gov. Leadership Conf.
11/16/2017 Parent Fair
01/26/2018 Self-Assessment Trng.
01/29-02/09/2018 Self-Assessment
02/07/2018 Recruitment Trng. Ctr. Mgrs.
02/21/2018 Fatherhood Conf.
03/05-08/2018 Nutrition Contest
04/16-19/2018 Week of Young Child
04/26/2018 Joint Adv/Com. Partnership Mtg.
05/03/2018 Volunteer Assembly
06/07/2018 Last Day of School
06/08/2018 Staff Assembly

PROGRAM HOLIDAYS

09/04/2017
10/09/2017
11/10/2017
11/20-24/2017
12/25-01/05/2017
01/15/2018
02/19/2018
03/12-16/2018
03/30/2018
05/28/2018

RECRUITMENT DAY 03/09/2018

PC/CC APPROVAL P.C. 00/00/2017 C.C. 00/00/2017

PSJA

2017-2018 PROGRAM CALENDAR

H. C. H. S. P.

AUGUST

M	T	W	T	F
	1	2	3	4
7	8	9	10	11
14	15	16	17	18
21	22	23	24	25
28	29	30	31	

SEPTEMBER

M	T	W	T	F
				1
4	5	6	7	8
11	12	13	14	15
18	19	20	21	22
25	26	27	28	29

OCTOBER

M	T	W	T	F
2	3	4	5	6
9	10	11	12	13
16	17	18	19	20
23	24	25	26	27
30	31			

NOVEMBER

M	T	W	T	F
		1	2	3
6	7	8	9	10
13	14	15	16	17
20	21	22	23	24
27	28	29	30	

DECEMBER

M	T	W	T	F
				1
4	5	6	7	8
11	12	13	14	15
18	19	20	21	22
25	26	27	28	29

JANUARY

M	T	W	T	F
1	2	3	4	5
8	9	10	11	12
15	16	17	18	19
22	23	24	25	26
29	30	31		

FEBRUARY

M	T	W	T	F
			1	2
5	6	7	8	9
12	13	14	15	16
19	20	21	22	23
26	27	28		

MARCH

M	T	W	T	F
			1	2
5	6	7	8	9
12	13	14	15	16
19	20	21	22	23
26	27	28	29	30

APRIL

M	T	W	T	F
2	3	4	5	6
9	10	11	12	13
16	17	18	19	20
23	24	25	26	27
30				

MAY

M	T	W	T	F
	1	2	3	4
7	8	9	10	11
14	15	16	17	18
21	22	23	24	25
28	29	30	31	

JUNE

M	T	W	T	F
				1
4	5	6	7	8
11	12	13	14	15
18	19	20	21	22
25	26	27	28	29

SERVICE DAYS 178

FIRST / LAST DAY OF SCHOOL
PROGRAM ACTIVITIES
PROGRAM HOLIDAYS
RECRUITMENT DAYS
STAFF DEV. DAYS
WORK DAY

PROGRAM ACTIVITIES

08/01-10/2017	Pre Service
08/21-24/2017	Parent Orientation Mtg.
08/28/2017	First Day of School
08/31/2017	Networking Meeting
09/05-07/2017	Volunteer Trng. Conf.
09/23/2017	Parent Leadership Conf.
10/11/2017~3/21/2018	Open House
10/21-22/2017	Gov. Leadership Conf.
11/16/2017	Parent Fair
01/26/2018	Self-Assessment Trng.
01/29-02/09/2018	Self-Assessment
02/07/2018	Recruitment Trng. Ctr. Mgrs.
02/21/2018	Fatherhood Conf.
03/05-08/2018	Nutrition Contest
04/16-19/2018	Week of Young Child
04/26/2018	Joint Adv/Com. Partnership Mtg.
05/03/2018	Volunteer Assembly
06/07/2018	Last Day of School
06/08/2018	Staff Assembly

PROGRAM HOLIDAYS

11/20-24/2017
12/22-01/05/2017
02/05/2018
03/12-16/2018
03/30/2018
05/28/2018

STAFF DEV. DAYS 10/09/2017

RECRUITMENT DAY 03/09/2018

WORK DAY NONE

PC/CC APPROVAL P.C. 00/00/2017 C.C. 00/00/2017

PHARR, SAN JUAN I, SAN JUAN II, ALAMO, LAS MILPAS, PALACIOS, LONGORIA, FARIAS

WESLACO
2017-2018 PROGRAM CALENDAR
H. C. H. S. P.

AUGUST

M	T	W	T	F
	1	2	3	4
7	8	9	10	11
14	15	16	17	18
21	22	23	24	25
28	29	30	31	

SEPTEMBER

M	T	W	T	F
				1
4	5	6	7	8
11	12	13	14	15
18	19	20	21	22
25	26	27	28	29

OCTOBER

M	T	W	T	F
2	3	4	5	6
9	10	11	12	13
16	17	18	19	20
23	24	25	26	27
30	31			

NOVEMBER

M	T	W	T	F
		1	2	3
6	7	8	9	10
13	14	15	16	17
20	21	22	23	24
27	28	29	30	

DECEMBER

M	T	W	T	F
				1
4	5	6	7	8
11	12	13	14	15
18	19	20	21	22
25	26	27	28	29

JANUARY

M	T	W	T	F
1	2	3	4	5
8	9	10	11	12
15	16	17	18	19
22	23	24	25	26
29	30	31		

FEBRUARY

M	T	W	T	F
			1	2
5	6	7	8	9
12	13	14	15	16
19	20	21	22	23
26	27	28		

MARCH

M	T	W	T	F
			1	2
5	6	7	8	9
12	13	14	15	16
19	20	21	22	23
26	27	28	29	30

APRIL

M	T	W	T	F
2	3	4	5	6
9	10	11	12	13
16	17	18	19	20
23	24	25	26	27
30				

MAY

M	T	W	T	F
	1	2	3	4
7	8	9	10	11
14	15	16	17	18
21	22	23	24	25
28	29	30	31	

JUNE

M	T	W	T	F
				1
4	5	6	7	8
11	12	13	14	15
18	19	20	21	22
25	26	27	28	29

SERVICE DAYS 178

- FIRST / LAST DAY OF SCHOOL
- PROGRAM ACTIVITIES
- PROGRAM HOLIDAYS
- RECRUITMENT DAYS
- STAFF DEV. DAYS
- WORK DAY

PROGRAM ACTIVITIES

08/01-10/2017	Pre Service
08/21-24/2017	Parent Orientation Mtg.
08/28/2017	First Day of School
08/31/2017	Networking Meeting
09/05-07/2017	Volunteer Trng. Conf.
09/23/2017	Parent Leadership Conf.
10/11/2017~3/21/2018	Open House
10/21-22/2017	Gov. Leadership Conf.
11/16/2017	Parent Fair
01/26/2018	Self-Assessment Trng.
01/29-02/09/2018	Self-Assessment
02/07/2018	Recruitment Trng. Ctr. Mgrs.
02/21/2018	Fatherhood Conf.
03/05-08/2018	Nutrition Contest
04/16-19/2018	Week of Young Child
04/26/2018	Joint Adv/Com. Partnership Mtg.
05/03/2018	Volunteer Assembly
06/07/2018	Last Day of School
06/08/2018	Staff Assembly

PROGRAM HOLIDAYS

11/20-24/2017	03/12-16/2018
12/25/2017-01/05/2018	03/30/2018
02/05/2018	5/28/2018

STAFF DEV. DAYS — 09/04/2017, 10/09/2017

RECRUITMENT DAY — 03/09/2018

WORK DAY — NONE

PC/CC APPROVAL — P.C. 00/00/2017, C.C. 00/00/2017

WESLACO I, WESLACO III, LA HERENCIA, LA ESTANCIA

LA JOYA
2017-2018 PROGRAM CALENDAR
H. C. H. S. P.

AUGUST

M	T	W	T	F
	1	2	3	4
7	8	9	10	11
14	15	16	17	18
21	22	23	24	25
28	29	30	31	

SEPTEMBER

M	T	W	T	F
				1
4	5	6	7	8
11	12	13	14	15
18	19	20	21	22
25	26	27	28	29

OCTOBER

M	T	W	T	F
2	3	4	5	6
9	10	11	12	13
16	17	18	19	20
23	24	25	26	27
30	31			

NOVEMBER

M	T	W	T	F
		1	2	3
6	7	8	9	10
13	14	15	16	17
20	21	22	23	24
27	28	29	30	

DECEMBER

M	T	W	T	F
				1
4	5	6	7	8
11	12	13	14	15
18	19	20	21	22
25	26	27	28	29

JANUARY

M	T	W	T	F
1	2	3	4	5
8	9	10	11	12
15	16	17	18	19
22	23	24	25	26
29	30	31		

FEBRUARY

M	T	W	T	F
			1	2
5	6	7	8	9
12	13	14	15	16
19	20	21	22	23
26	27	28		

MARCH

M	T	W	T	F
			1	2
5	6	7	8	9
12	13	14	15	16
19	20	21	22	23
26	27	28	29	30

APRIL

M	T	W	T	F
2	3	4	5	6
9	10	11	12	13
16	17	18	19	20
23	24	25	26	27
30				

MAY

M	T	W	T	F
	1	2	3	4
7	8	9	10	11
14	15	16	17	18
21	22	23	24	25
28	29	30	31	

JUNE

M	T	W	T	F
				1
4	5	6	7	8
11	12	13	14	15
18	19	20	21	22
25	26	27	28	29

SERVICE DAYS 178

- FIRST / LAST DAY OF SCHOOL
- PROGRAM ACTIVITIES
- PROGRAM HOLIDAYS
- RECRUITMENT DAYS
- STAFF DEV. DAYS
- WORK DAY

PROGRAM ACTIVITIES

08/01-10/2017	Pre Service
08/14-17/2017	Parent Orientation Mtg.
08/21/2017	First Day of School
08/31/2017	Networking Meeting
09/05-07/2017	Volunteer Trng. Conf.
09/23/2017	Parent Leadership Conf.
10/11/2017~3/21/2018	Open House
10/21-22/2017	Gov. Leadership Conf.
11/16/2017	Parent Fair
01/26/2018	Self-Assessment Trng.
01/29-02/09/2018	Self-Assessment
02/07/2018	Recruitment Trng. Ctr. Mgrs.
02/21/2018	Fatherhood Conf.
03/05-08/2018	Nutrition Contest
04/16-19/2018	Week of Young Child
04/26/2018	Joint Adv/Com. Partnership Mtg.
05/03/2018	Volunteer Assembly
06/07/2018	Last Day of School
06/08/2018	Staff Assembly

PROGRAM HOLIDAYS

10/09/2017
11/20-24/2017
2/22/2017-01/04/2018
02/05/2018
03/12-16/2018
03/30/2018
05/28/2018

STAFF DEV. DAYS
09/22/2017
11/03/2017
01/08/2018
02/19/2018
04/13/2018

RECRUITMENT DAY 03/09/2018

WORK DAYS 01/05/2018

PC/CC APPROVAL
P.C. 00/00/2017
C.C. 00/00/2017

LA JOYA, SULLIVAN, PALMVIEW II, PALMVIEW III, WESTERN ROAD

EDCOUCH

2017-2018 PROGRAM CALENDAR

H. C. H. S. P.

AUGUST

M	T	W	T	F
	1	2	3	4
7	8	9	10	11
14	15	16	17	18
21	22	23	24	25
28	29	30	31	

SEPTEMBER

M	T	W	T	F
				1
4	5	6	7	8
11	12	13	14	15
18	19	20	21	22
25	26	27	28	29

OCTOBER

M	T	W	T	F
2	3	4	5	6
9	10	11	12	13
16	17	18	19	20
23	24	25	26	27
30	31			

NOVEMBER

M	T	W	T	F
		1	2	3
6	7	8	9	10
13	14	15	16	17
20	21	22	23	24
27	28	29	30	

DECEMBER

M	T	W	T	F
				1
4	5	6	7	8
11	12	13	14	15
18	19	20	21	22
25	26	27	28	29

JANUARY

M	T	W	T	F
1	2	3	4	5
8	9	10	11	12
15	16	17	18	19
22	23	24	25	26
29	30	31		

FEBRUARY

M	T	W	T	F
			1	2
5	6	7	8	9
12	13	14	15	16
19	20	21	22	23
26	27	28		

MARCH

M	T	W	T	F
			1	2
5	6	7	8	9
12	13	14	15	16
19	20	21	22	23
26	27	28	29	30

APRIL

M	T	W	T	F
2	3	4	5	6
9	10	11	12	13
16	17	18	19	20
23	24	25	26	27
30				

MAY

M	T	W	T	F
	1	2	3	4
7	8	9	10	11
14	15	16	17	18
21	22	23	24	25
28	29	30	31	

JUNE

M	T	W	T	F
				1
4	5	6	7	8
11	12	13	14	15
18	19	20	21	22
25	26	27	28	29

SERVICE DAYS 178

- FIRST / LAST DAY OF SCHOOL
- PROGRAM ACTIVITIES
- PROGRAM HOLIDAYS
- RECRUITMENT DAYS
- WORK DAY
- STAFF DEV. DAYS

PROGRAM ACTIVITIES

08/01-10/2017	Pre Service
08/21-24/2017	Parent Orientation Mtg.
08/28/2017	First Day of School
08/31/2017	Networking Meeting
09/05-07/2017	Volunteer Trng. Conf.
09/23/2017	Parent Leadership Conf.
10/11/2017~03/21/2018	Open House
10/21-22/2017	Gov. Leadership Conf.
11/16/2017	Parent Fair
01/26/2018	Self-Assessment Trng.
01/29-02/09/2018	Self-Assessment
02/07/2018	Recruitment Trng. Ctr. Mgrs.
02/21/2018	Fatherhood Conf.
03/05-08/2018	Nutrition Contest
04/16-19/2018	Week of Young Child
04/26/2018	Joint Adv/Com. Partnership Mtg.
05/03/2018	Volunteer Assembly
06/07/2018	Last Day of School
06/08/2018	Staff Assembly

PROGRAM HOLIDAYS

10/09/2017	03/12-16/2018
11/20-24/2017	03/30/2018
12/25-01/05/2017	
02/05/2018	

STAFF DEV. DAYS 02/23/2018

RECRUITMENT DAY 03/09/2018

WORK DAY 01/08/2018

PC/CC APPROVAL P.C. 00/00/2017 C.C. 00/00/2017

EDINBURG
2017-2018 PROGRAM CALENDAR
H. C. H. S. P.

AUGUST

M	T	W	T	F
	1	2	3	4
7	8	9	10	11
14	15	16	17	18
21	22	23	24	25
28	29	30	31	

SEPTEMBER

M	T	W	T	F
				1
4	5	6	7	8
11	12	13	14	15
18	19	20	21	22
25	26	27	28	29

OCTOBER

M	T	W	T	F
2	3	4	5	6
9	10	11	12	13
16	17	18	19	20
23	24	25	26	27
30	31			

NOVEMBER

M	T	W	T	F
		1	2	3
6	7	8	9	10
13	14	15	16	17
20	21	22	23	24
27	28	29	30	

DECEMBER

M	T	W	T	F
				1
4	5	6	7	8
11	12	13	14	15
18	19	20	21	22
25	26	27	28	29

JANUARY

M	T	W	T	F
1	2	3	4	5
8	9	10	11	12
15	16	17	18	19
22	23	24	25	26
29	30	31		

FEBRUARY

M	T	W	T	F
			1	2
5	6	7	8	9
12	13	14	15	16
19	20	21	22	23
26	27	28		

MARCH

M	T	W	T	F
			1	2
5	6	7	8	9
12	13	14	15	16
19	20	21	22	23
26	27	28	29	30

APRIL

M	T	W	T	F
2	3	4	5	6
9	10	11	12	13
16	17	18	19	20
23	24	25	26	27
30				

MAY

M	T	W	T	F
	1	2	3	4
7	8	9	10	11
14	15	16	17	18
21	22	23	24	25
28	29	30	31	

JUNE

M	T	W	T	F
				1
4	5	6	7	8
11	12	13	14	15
18	19	20	21	22
25	26	27	28	29

SERVICE DAYS 178

- FIRST / LAST DAY OF SCHOOL
- PROGRAM ACTIVITIES
- PROGRAM HOLIDAYS
- RECRUITMENT DAYS
- WORK DAY
- STAFF DEV. DAY

PROGRAM ACTIVITIES

08/01-10/2017	Pre Service
08/21-24/2017	Parent Orientation Mtg.
08/28/2017	First Day of School
08/31/2017	Networking Meeting
09/05-07/2017	Volunteer Trng. Conf.
09/23/2017	Parent Leadership Conf.
10/11/2017~3/21/2018	Open House
10/21-22/2017	Gov. Leadership Conf.
11/16/2017	Parent Fair
01/26/2018	Self-Assessment Trng.
01/29-02/09/2018	Self-Assessment
02/07/2018	Recruitment Trng. Ctr. Mgrs.
02/21/2018	Fatherhood Conf.
03/05-08/2018	Nutrition Contest
04/16-19/2018	Week of Young Child
04/26/2018	Joint Adv/Com. Partnership Mtg.
05/03/2018	Volunteer Assembly
06/05/2018	Last Day of School
06/08/2018	Staff Assembly

PROGRAM HOLIDAYS

11/20-24/2017
12/25/17-01/05/2018
2/05/2018
03/12-16/2018
03/30/2018

STAFF DEV. DAY — NONE

RECRUITMENT DAY — 03/09/2018

WORK DAY — 01/08/2018

PC/CC APPROVAL — P.C. 00/00/2017, C.C. 00/00/2017

EDINBURG I, EDINBURG II, EDINBURG III, EDINBURG IV, EDINBURG V, UTRGV, SAN CARLOS

MERCEDES
2017-2018 PROGRAM CALENDAR
H. C. H. S. P.

AUGUST

M	T	W	T	F
	1	2	3	4
7	8	9	10	11
14	15	16	17	18
21	22	23	24	25
28	29	30	31	

SEPTEMBER

M	T	W	T	F
				1
4	5	6	7	8
11	12	13	14	15
18	19	20	21	22
25	26	27	28	29

OCTOBER

M	T	W	T	F
2	3	4	5	6
9	10	11	12	13
16	17	18	19	20
23	24	25	26	27
30	31			

NOVEMBER

M	T	W	T	F
		1	2	3
6	7	8	9	10
13	14	15	16	17
20	21	22	23	24
27	28	29	30	

DECEMBER

M	T	W	T	F
				1
4	5	6	7	8
11	12	13	14	15
18	19	20	21	22
25	26	27	28	29

JANUARY

M	T	W	T	F
1	2	3	4	5
8	9	10	11	12
15	16	17	18	19
22	23	24	25	26
29	30	31		

FEBRUARY

M	T	W	T	F
			1	2
5	6	7	8	9
12	13	14	15	16
19	20	21	22	23
26	27	28		

MARCH

M	T	W	T	F
			1	2
5	6	7	8	9
12	13	14	15	16
19	20	21	22	23
26	27	28	29	30

APRIL

M	T	W	T	F
2	3	4	5	6
9	10	11	12	13
16	17	18	19	20
23	24	25	26	27
30				

MAY

M	T	W	T	F
	1	2	3	4
7	8	9	10	11
14	15	16	17	18
21	22	23	24	25
28	29	30	31	

JUNE

M	T	W	T	F
				1
4	5	6	7	8
11	12	13	14	15
18	19	20	21	22
25	26	27	28	29

SERVICE DAYS 178

FIRST / LAST DAY OF SCHOOL
PROGRAM ACTIVITIES
PROGRAM HOLIDAYS
RECRUITMENT DAYS
STAFF DEV. DAY
WORK DAY

PROGRAM ACTIVITIES

08/01-10/2017	Pre Service
08/21-24/2017	Parent Orientation Mtg.
08/28/2017	First Day of School
08/31/2017	Networking Meeting
09/05-07/2017	Volunteer Trng. Conf.
09/23/2017	Parent Leadership Conf.
10/11/2017~3/21/2018	Open House
10/21-22/2017	Gov. Leadership Conf.
11/16/2017	Parent Fair
01/26/2018	Self-Assessment Trng.
01/29-02/09/2018	Self-Assessment
02/07/2018	Recruitment Trng. Ctr. Mgrs.
02/21/2018	Fatherhood Conf.
03/05-08/2018	Nutrition Contest
04/16-19/2018	Week of Young Child
04/26/2018	Joint Adv/Com. Partnership Mtg.
05/03/2018	Volunteer Assembly
06/07/2018	Last Day of School
06/08/2018	Staff Assembly

PROGRAM HOLIDAYS

10/09/2017	02/05/2018
11/20-24/2017	03/12-16/2018
12/25/2017-01/05/2018	03/30/2018

STAFF DEV. DAY — NONE

RECRUITMENT DAY — 03/09/2018

WORK DAY — 01/19/2018

PC/CC APPROVAL — P.C. 00/00/2017, C.C. 00/00/2017

MONTE ALTO

2017-2018 PROGRAM CALENDAR

H. C. H. S. P.

AUGUST

M	T	W	T	F
	1	2	3	4
7	8	9	10	11
14	15	16	17	18
21	22	23	24	25
28	29	30	31	

SEPTEMBER

M	T	W	T	F
				1
4	5	6	7	8
11	12	13	14	15
18	19	20	21	22
25	26	27	28	29

OCTOBER

M	T	W	T	F
2	3	4	5	6
9	10	11	12	13
16	17	18	19	20
23	24	25	26	27
30	31			

NOVEMBER

M	T	W	T	F
		1	2	3
6	7	8	9	10
13	14	15	16	17
20	21	22	23	24
27	28	29	30	

DECEMBER

M	T	W	T	F
				1
4	5	6	7	8
11	12	13	14	15
18	19	20	21	22
25	26	27	28	29

JANUARY

M	T	W	T	F
1	2	3	4	5
8	9	10	11	12
15	16	17	18	19
22	23	24	25	26
29	30	31		

FEBRUARY

M	T	W	T	F
			1	2
5	6	7	8	9
12	13	14	15	16
19	20	21	22	23
26	27	28		

MARCH

M	T	W	T	F
			1	2
5	6	7	8	9
12	13	14	15	16
19	20	21	22	23
26	27	28	29	30

APRIL

M	T	W	T	F
2	3	4	5	6
9	10	11	12	13
16	17	18	19	20
23	24	25	26	27
30				

MAY

M	T	W	T	F
	1	2	3	4
7	8	9	10	11
14	15	16	17	18
21	22	23	24	25
28	29	30	31	

JUNE

M	T	W	T	F
				1
4	5	6	7	8
11	12	13	14	15
18	19	20	21	22
25	26	27	28	29

SERVICE DAYS 178

- FIRST / LAST DAY OF SCHOOL
- PROGRAM ACTIVITIES
- PROGRAM HOLIDAYS
- RECRUITMENT DAYS
- STAFF DEV. DAYS
- WORK DAY

PROGRAM ACTIVITIES

08/01-10/2017	Pre Service
08/21-24/2017	Parent Orientation Mtg.
08/28/2017	First Day of School
08/31/2017	Networking Meeting
09/05-07/2017	Volunteer Trng. Conf.
09/23/2017	Parent Leadership Conf.
10/11/2017~3/21/2018	Open House
10/21-22/2017	Gov. Leadership Conf.
11/16/2017	Parent Fair
01/26/2018	Self-Assessment Trng.
01/29-02/09/2018	Self-Assessment
02/07/2018	Recruitment Trng. Ctr. Mgrs.
02/21/2018	Fatherhood Conf.
03/05-08/2018	Nutrition Contest
04/16-19/2018	Week of Young Child
04/26/2018	Joint Adv/Com. Partnership Mtg.
05/03/2018	Volunteer Assembly
06/07/2018	Last Day of School
00/08/2018	Staff Assembly

PROGRAM HOLIDAYS

10/09/2017	02/05/2018
11/20-24/2017	03/12-16/2018
12/25/2017-01/05/2018	03/30/2018

STAFF DEV. DAYS 03/26/2018

RECRUITMENT DAY 03/09/2018

WORK DAY 01/22/2018

PC/CC APPROVAL P.C. 00/00/2017 C.C. 00/00/2017

MCALLEN
2017-2018 PROGRAM CALENDAR
H. C. H. S. P.

AUGUST

M	T	W	T	F
	1	2	3	4
7	8	9	10	11
14	15	16	17	18
21	22	23	24	25
28	29	30	31	

SEPTEMBER

M	T	W	T	F
				1
4	5	6	7	8
11	12	13	14	15
18	19	20	21	22
25	26	27	28	29

OCTOBER

M	T	W	T	F
2	3	4	5	6
9	10	11	12	13
16	17	18	19	20
23	24	25	26	27
30	31			

NOVEMBER

M	T	W	T	F
		1	2	3
6	7	8	9	10
13	14	15	16	17
20	21	22	23	24
27	28	29	30	

DECEMBER

M	T	W	T	F
				1
4	5	6	7	8
11	12	13	14	15
18	19	20	21	22
25	26	27	28	29

JANUARY

M	T	W	T	F
1	2	3	4	5
8	9	10	11	12
15	16	17	18	19
22	23	24	25	26
29	30	31		

FEBRUARY

M	T	W	T	F
			1	2
5	6	7	8	9
12	13	14	15	16
19	20	21	22	23
26	27	28		

MARCH

M	T	W	T	F
			1	2
5	6	7	8	9
12	13	14	15	16
19	20	21	22	23
26	27	28	29	30

APRIL

M	T	W	T	F
2	3	4	5	6
9	10	11	12	13
16	17	18	19	20
23	24	25	26	27
30				

MAY

M	T	W	T	F
	1	2	3	4
7	8	9	10	11
14	15	16	17	18
21	22	23	24	25
28	29	30	31	

JUNE

M	T	W	T	F
				1
4	5	6	7	8
11	12	13	14	15
18	19	20	21	22
25	26	27	28	29

SERVICE DAYS 178

- FIRST / LAST DAY OF SCHOOL
- PROGRAM ACTIVITIES
- PROGRAM HOLIDAYS
- RECRUITMENT DAYS
- STAFF DEV. DAYS
- WORK DAY

PROGRAM ACTIVITIES

08/01-10/2017	Pre Service
08/21-24/2017	Parent Orientation Mtg.
08/28/2017	First Day of School
08/31/2017	Networking Meeting
09/05-07/2017	Volunteer Trng. Conf.
09/23/2017	Parent Leadership Conf.
10/11/2017~3/21/2018	Open House
10/21-22/2017	Gov. Leadership Conf.
11/16/2017	Parent Fair
01/26/2018	Self-Assessment Trng.
01/29-02/09/2018	Self-Assessment
02/07/2018	Recruitment Trng. Ctr. Mgrs.
02/21/2018	Fatherhood Conf.
03/05-08/2018	Nutrition Contest
04/16-19/2018	Week of Young Child
04/26/2018	Joint Adv/Com. Partnership Mtg.
05/03/2018	Volunteer Assembly
06/07/2018	Last Day of School
06/08/2018	Staff Assembly

PROGRAM HOLIDAYS

10/09/2017
11/20-24/2017
12/25/2017-01/05/2018
03/12-16/2018
03/30/2018

STAFF DEV. DAYS 01/08/2018, 04/13/2018

RECRUITMENT DAY 03/09/2018

WORK DAY 01/09/2018

PC/CC APPROVAL P.C. 00/00/2017, C.C. 00/00/2017

MCALLEN IV, MCALLEN V, MCALLEN VI, AUSTIN ONE-STOP

MISSION
2017-2018 PROGRAM CALENDAR
H. C. H. S. P.

AUGUST

M	T	W	T	F
	1	2	3	4
7	8	9	10	11
14	15	16	17	18
21	22	23	24	25
28	29	30	31	

SEPTEMBER

M	T	W	T	F
				1
4	5	6	7	8
11	12	13	14	15
18	19	20	21	22
25	26	27	28	29

OCTOBER

M	T	W	T	F
2	3	4	5	6
9	10	11	12	13
16	17	18	19	20
23	24	25	26	27
30	31			

NOVEMBER

M	T	W	T	F
		1	2	3
6	7	8	9	10
13	14	15	16	17
20	21	22	23	24
27	28	29	30	

DECEMBER

M	T	W	T	F
				1
4	5	6	7	8
11	12	13	14	15
18	19	20	21	22
25	26	27	28	29

JANUARY

M	T	W	T	F
1	2	3	4	5
8	9	10	11	12
15	16	17	18	19
22	23	24	25	26
29	30	31		

FEBRUARY

M	T	W	T	F
			1	2
5	6	7	8	9
12	13	14	15	16
19	20	21	22	23
26	27	28		

MARCH

M	T	W	T	F
			1	2
5	6	7	8	9
12	13	14	15	16
19	20	21	22	23
26	27	28	29	30

APRIL

M	T	W	T	F
2	3	4	5	6
9	10	11	12	13
16	17	18	19	20
23	24	25	26	27
30				

MAY

M	T	W	T	F
	1	2	3	4
7	8	9	10	11
14	15	16	17	18
21	22	23	24	25
28	29	30	31	

JUNE

M	T	W	T	F
				1
4	5	6	7	8
11	12	13	14	15
18	19	20	21	22
25	26	27	28	29

SERVICE DAYS 178

- FIRST / LAST DAY OF SCHOOL
- PROGRAM ACTIVITIES
- PROGRAM HOLIDAYS
- RECRUITMENT DAYS
- STAFF DEV. DAYS
- WORK DAYS

PROGRAM ACTIVITIES

08/01-10/2017	Pre Service
08/21-24/2017	Parent Orientation Mtg.
08/28/2017	First Day of School
08/31/2017	Networking Meeting
09/05-07/2017	Volunteer Trng. Conf.
09/23/2017	Parent Leadership Conf.
10/11/2017~3/21/2018	Open House
10/21-22/2017	Gov. Leadership Conf.
11/16/2017	Parent Fair
01/26/2018	Self-Assessment Trng.
01/29-02/09/2018	Self-Assessment
02/07/2018	Recruitment Trng. Ctr. Mgrs.
02/21/2018	Fatherhood Conf.
03/05-08/2018	Nutrition Contest
04/16-19/2018	Week of Young Child
04/26/2018	Joint Adv/Com. Partnership Mtg.
05/03/2018	Volunteer Assembly
06/07/2018	Last Day of School
06/08/2018	Staff Assembly

PROGRAM HOLIDAYS

09/04/2017	02/05/2018
11/20-24/2017	03/12-16/2018
12/22/2017-01/05/2018	03/30/2018

STAFF DEV. DAYS — NONE

RECRUITMENT DAY — 03/09/2018

WORK DAYS — 10/09/2017

PC/CC APPROVAL — P.C. 00/00/2017, C.C. 00/00/2017

ALTON, MISSION I, MISSION II, MISSION III, MISSION IV

HIDALGO

2017-2018 PROGRAM CALENDAR

H. C. H. S. P.

AUGUST

M	T	W	T	F
	1	2	3	4
7	8	9	10	11
14	15	16	17	18
21	22	23	24	25
28	29	30	31	

SEPTEMBER

M	T	W	T	F
				1
4	5	6	7	8
11	12	13	14	15
18	19	20	21	22
25	26	27	28	29

OCTOBER

M	T	W	T	F
2	3	4	5	6
9	10	11	12	13
16	17	18	19	20
23	24	25	26	27
30	31			

NOVEMBER

M	T	W	T	F
		1	2	3
6	7	8	9	10
13	14	15	16	17
20	21	22	23	24
27	28	29	30	

DECEMBER

M	T	W	T	F
				1
4	5	6	7	8
11	12	13	14	15
18	19	20	21	22
25	26	27	28	29

JANUARY

M	T	W	T	F
1	2	3	4	5
8	9	10	11	12
15	16	17	18	19
22	23	24	25	26
29	30	31		

FEBRUARY

M	T	W	T	F
			1	2
5	6	7	8	9
12	13	14	15	16
19	20	21	22	23
26	27	28		

MARCH

M	T	W	T	F
			1	2
5	6	7	8	9
12	13	14	15	16
19	20	21	22	23
26	27	28	29	30

APRIL

M	T	W	T	F
2	3	4	5	6
9	10	11	12	13
16	17	18	19	20
23	24	25	26	27
30				

MAY

M	T	W	T	F
	1	2	3	4
7	8	9	10	11
14	15	16	17	18
21	22	23	24	25
28	29	30	31	

JUNE

M	T	W	T	F
				1
4	5	6	7	8
11	12	13	14	15
18	19	20	21	22
25	26	27	28	29

SERVICE DAYS 178

FIRST / LAST DAY OF SCHOOL
PROGRAM ACTIVITIES
PROGRAM HOLIDAYS
RECRUITMENT DAYS
STAFF DEV. DAYS
WORK DAY

PROGRAM ACTIVITIES

08/01-10/2017	Pre Service
08/21-24/2017	Parent Orientation Mtg.
08/28/2017	First Day of School
08/31/2017	Networking Meeting
09/05-07/2017	Volunteer Trng. Conf.
09/23/2017	Parent Leadership Conf.
10/11/2017~3/21/2018	Open House
10/21-22/2017	Gov. Leadership Conf.
11/16/2017	Parent Fair
01/26/2018	Self-Assessment Trng.
01/29-02/09/2018	Self-Assessment
02/07/2018	Recruitment Trng. Ctr. Mgrs.
02/21/2018	Fatherhood Conf.
03/05-08/2018	Nutrition Contest
04/16-19/2018	Week of Young Child
04/26/2018	Joint Adv/Com. Partnership Mtg.
05/03/2018	Volunteer Assembly
06/07/2018	Last Day of School
06/08/2018	Staff Assembly

PROGRAM HOLIDAYS

09/04/2017	02/05/2018
11/20-24/2017	03/12-16/2018
12/25/2017-01/05/2018	03/30/2018

STAFF DEV. DAYS 10/09/2017, 01/08/2018

RECRUITMENT DAY 03/09/2018

WORK DAY NONE

PC/CC APPROVAL P.C. 00/00/2017, C.C. 00/00/2017

DONNA
2017-2018 PROGRAM CALENDAR
H. C. H. S. P.

AUGUST

M	T	W	T	F
	1	2	3	4
7	8	9	10	11
14	15	16	17	18
21	22	23	24	25
28	29	30	31	

SEPTEMBER

M	T	W	T	F
				1
4	5	6	7	8
11	12	13	14	15
18	19	20	21	22
25	26	27	28	29

OCTOBER

M	T	W	T	F
2	3	4	5	6
9	10	11	12	13
16	17	18	19	20
23	24	25	26	27
30	31			

NOVEMBER

M	T	W	T	F
		1	2	3
6	7	8	9	10
13	14	15	16	17
20	21	22	23	24
27	28	29	30	

DECEMBER

M	T	W	T	F
				1
4	5	6	7	8
11	12	13	14	15
18	19	20	21	22
25	26	27	28	29

JANUARY

M	T	W	T	F
1	2	3	4	5
8	9	10	11	12
15	16	17	18	19
22	23	24	25	26
29	30	31		

FEBRUARY

M	T	W	T	F
			1	2
5	6	7	8	9
12	13	14	15	16
19	20	21	22	23
26	27	28		

MARCH

M	T	W	T	F
			1	2
5	6	7	8	9
12	13	14	15	16
19	20	21	22	23
26	27	28	29	30

APRIL

M	T	W	T	F
2	3	4	5	6
9	10	11	12	13
16	17	18	19	20
23	24	25	26	27
30				

MAY

M	T	W	T	F
	1	2	3	4
7	8	9	10	11
14	15	16	17	18
21	22	23	24	25
28	29	30	31	

JUNE

M	T	W	T	F
				1
4	5	6	7	8
11	12	13	14	15
18	19	20	21	22
25	26	27	28	29

SERVICE DAYS 178

- FIRST / LAST DAY OF SCHOOL
- PROGRAM ACTIVITIES
- PROGRAM HOLIDAYS
- RECRUITMENT DAYS
- SERVICE DAYS
- WORK DAYS

DONNA I, DONNA II

PROGRAM ACTIVITIES

08/01-10/2017	Pre Service
08/21-24/2017	Parent Orientation Mtg.
08/28/2017	First Day of School
08/31/2017	Networking Meeting
09/05-07/2017	Volunteer Trng. Conf.
09/23/2017	Parent Leadership Conf.
10/11/2017~3/21/2018	Open House
10/21-22/2017	Gov. Leadership Conf.
11/16/2017	Parent Fair
01/26/2018	Self-Assessment Trng.
01/29-02/09/2018	Self-Assessment
02/07/2018	Recruitment Trng. Ctr. Mgrs.
02/21/2018	Fatherhood Conf.
03/05-08/2018	Nutrition Contest
04/16-19/2018	Week of Young Child
04/26/2018	Joint Adv/Com. Partnership Mtg.
05/03/2018	Volunteer Assembly
06/07/2018	Last Day of School
06/08/2018	Staff Assembly

PROGRAM HOLIDAYS

10/09/2017	02/05/2018
11/20-24/2017	03/12-16/2018
12/22/2017-01/05/2018	03/30/2018

STAFF DEV. DAY — NONE

RECRUITMENT DAY — 03/09/2018

WORK DAYS — 01/08/2018

PC/CC APPROVAL — P.C. 00/00/2017, C.C. 00/00/2017

PROGRESO

2017-2018 PROGRAM CALENDAR

H. C. H. S. P.

AUGUST

M	T	W	T	F
	1	2	3	4
7	8	9	10	11
14	15	16	17	18
21	22	23	24	25
28	29	30	31	

SEPTEMBER

M	T	W	T	F
				1
4	5	6	7	8
11	12	13	14	15
18	19	20	21	22
25	26	27	28	29

OCTOBER

M	T	W	T	F
2	3	4	5	6
9	10	11	12	13
16	17	18	19	20
23	24	25	26	27
30	31			

NOVEMBER

M	T	W	T	F
		1	2	3
6	7	8	9	10
13	14	15	16	17
20	21	22	23	24
27	28	29	30	

DECEMBER

M	T	W	T	F
				1
4	5	6	7	8
11	12	13	14	15
18	19	20	21	22
25	26	27	28	29

JANUARY

M	T	W	T	F
1	2	3	4	5
8	9	10	11	12
15	16	17	18	19
22	23	24	25	26
29	30	31		

FEBRUARY

M	T	W	T	F
			1	2
5	6	7	8	9
12	13	14	15	16
19	20	21	22	23
26	27	28		

MARCH

M	T	W	T	F
			1	2
5	6	7	8	9
12	13	14	15	16
19	20	21	22	23
26	27	28	29	30

APRIL

M	T	W	T	F
2	3	4	5	6
9	10	11	12	13
16	17	18	19	20
23	24	25	26	27
30				

MAY

M	T	W	T	F
	1	2	3	4
7	8	9	10	11
14	15	16	17	18
21	22	23	24	25
28	29	30	31	

JUNE

M	T	W	T	F
				1
4	5	6	7	8
11	12	13	14	15
18	19	20	21	22
25	26	27	28	29

SERVICE DAYS 178

FIRST / LAST DAY OF SCHOOL
PROGRAM ACTIVITIES
PROGRAM HOLIDAYS
RECRUITMENT DAYS
SERVICE DAYS
WORK DAY

PROGRAM ACTIVITIES

08/01-10/2017	Pre Service
08/21-24/2017	Parent Orientation Mtg.
08/28/2017	First Day of School
08/31/2017	Networking Meeting
09/05-07/2017	Volunteer Trng. Conf.
09/23/2017	Parent Leadership Conf.
10/11/2017~3/21/2018	Open House
10/21-22/2017	Gov. Leadership Conf.
11/16/2017	Parent Fair
01/26/2018	Self-Assessment Trng.
01/29-02/09/2018	Self-Assessment
02/07/2018	Recruitment Trng. Ctr. Mgrs.
02/21/2018	Fatherhood Conf.
03/05-08/2018	Nutrition Contest
04/16-19/2018	Week of Young Child
04/26/2018	Joint Adv/Com. Partnership Mtg.
05/03/2018	Volunteer Assembly
06/07/2018	Last Day of School
06/08/2018	Staff Assembly

PROGRAM HOLIDAYS

10/09/2017	02/05/2018
11/20-24/2017	03/12-16/2018
12/22/2017-01/05/2018	03/30/2018

STAFF DEV. DAY — NONE

RECRUITMENT DAY — 03/09/2018

WORK DAY — 01/08/2018

PC/CC APPROVAL — P.C. 00/00/2017, C.C. 00/00/2017

AI-59889 **Head Start** **16. B.**

CC - REGULAR

Meeting Date: 05/30/2017

Submitted For: Edmundo Garcia, HEAD START **Submitted By:** Linda Galaviz, HEAD START

Department: HEAD START

Information

CAPTION

Discussion/Approval to disburse lump sum summer paychecks to staff who resign as of the Last Summer Leave Day/Last Working Day for position assigned.

BACKGROUND

Policy Council Approval: 05.17.17

Fiscal Impact

Attachments

Disburse Summer Paychecks

Form Review

Inbox	Reviewed By	Date
Budget & Management	Veronica Ortiz	05/19/2017 10:24 AM
Final Approval	Monica Salinas	05/26/2017 02:58 PM
Form Started By: Linda Galaviz		Started On: 05/16/2017 09:29 AM
Final Approval Date: 05/26/2017		

Hidalgo County Head Start Program

Policy Council Regular Agenda

DATE: May 17, 2017

SUBJECT: Discussion/Approval to Disburse Lump Sum Summer Paychecks to Staff Who Resign as of the Last Summer Leave Day/Last Working Day for Position Assigned

RATIONALE/NEED: Each staff member has worked all the days corresponding to their position by the end of their Summer Leave. Staff intending to resign as of the last summer leave day/last working day for position assigned will be allowed to be paid for the summer leave in a lump sum. Employee benefits coverage will continue to the resignation date.

RECOMMENDATION: Administration recommends approval.

COST:

RELATED INFORMATION INCLUDES: N/A

****

INITIATED BY: Teresa Flores, Executive Director

REVIEWED BY: Teresa Flores, Executive Director

EXECUTIVE DIRECTOR'S APPROVAL: Teresa Flores

AI-59890 **Head Start** **16. C.**

CC - REGULAR

Meeting Date: 05/30/2017

Submitted For: Edmundo Garcia, HEAD START **Submitted By:** Linda Galaviz, HEAD START

Department: HEAD START

Information

CAPTION

Discussion/Approval of the Following 2017-2018 Hidalgo County Head Start Program Plans:

Child Nutrition Services	Health Services	Special Services	
Education Services	Human Resources	Transition Services	
Family Services	Mental Health Services	Transportation Services	

BACKGROUND

Policy Council Approval: 05.17.17

Fiscal Impact

Attachments

Program Plans 2017-2018

Form Review

Inbox	Reviewed By	Date
Budget & Management	Veronica Ortiz	05/19/2017 10:23 AM
Final Approval	Monica Salinas	05/26/2017 02:58 PM
Form Started By: Linda Galaviz		Started On: 05/16/2017 09:33 AM
Final Approval Date: 05/26/2017		

Hidalgo County Head Start Program

Policy Council Regular Agenda

DATE: May 17, 2017

SUBJECT: Discussion/Approval of the following 2017-2018 Hidalgo County Head Start Program Plans:

a. Child Nutrition Services
b. Education Services
c. Family Services
d. Health Services
e. Human Resources
f. Mental Health Services
g. Special Services
h. Transition Services
i. Transportation Services

RATIONALE/NEED: The Program Plans must be approved annually to comply with the Federal Performance Standards.

RECOMMENDATION: Administration recommends approval.

COST: N/A

RELATED INFORMATION INCLUDES: 2017-2018 Program Plans

****

INITIATED BY: Department Directors

REVIEWED BY: Nora S. Munoz, Assistant Director for Programmatic Services
Edmundo Garcia, Assistant Director for Operations

EXECUTIVE DIRECTOR'S APPROVAL: Teresa Flores

CHILD NUTRITION SERVICES PLAN

Hidalgo County Head Start Program

Child Nutrition Services Program Plan 2017 – 2018

Advisory Committee Approval: 04.27.17
Policy Council Approval:
Commissioners' Court Approval:

HIDALGO COUNTY START PROGRAM
Child Nutrition Program Plan

PERFORMANCE STANDARD: §1302.44 Child Nutrition

GOAL: The HIDALGO COUNTY HEAD START PROGRAM/EARLY HEAD START will design and implement a nutrition program that meets the nutritional needs and feeding requirements of each child.

OBJECTIVE: To implement a plan that addresses children's cultural and developmental needs, and accommodates feeding requirements of each child with special dietary needs, and children with disabilities.

TASK TO BE ACCOMPLISHED	PERSON RESPONSIBLE	PERSON RESPONSIBLE FOR MONITORING	PROJECTED DATE OF COMPLETION	DOCUMENTS OR FORMS
Menus developed will reflect: 1. Culture and ethnic preferences, which will broaden the child's nutritional experience. Menus shall include foods that are familiar to children and also introduce new foods on on-going bases. 2. Food preference surveys will be completed by parents and staff and reviewed by Child Nutrition Department staff.	-Child Nutrition Director -Education Area Directors -Health Services Director -Center Managers -Facilitators -Support Service Assistants -Teachers -Assistant Teachers	-Child Nutrition Director -Child Nutrition Coordinators -Center Managers -Facilitators -Support Services Assistants -Teachers	-On-going monitoring	-Menus
3. A nutrition care plan for children with disabilities will be prepared and will include menu changes, special feeding equipment and food modification.	-All of the Above and -Special Services Director	-All of the Above and -Special Services Director -Special Services Coordinator -Disability Aides	-As needed -Yearly Self Assessment -On-going monitoring	-Therapeutic Diet Menus

HIDALGO COUNTY START PROGRAM
Child Nutrition Program Plan

PERFORMANCE STANDARD: §1302.44 Child Nutrition

GOAL: The HIDALGO COUNTY HEAD START PROGRAM/EARLY HEAD START will design and implement a nutrition program that meets the nutritional needs and feeding requirements of each child.

OBJECTIVE: To provide meals to each enrolled child to meet 1/2 to 2/3 of the child's daily nutritional needs.

TASK TO BE ACCOMPLISHED	PERSON RESPONSIBLE	PERSON RESPONSIBLE FOR MONITORING	PROJECTED DATE OF COMPLETION	DOCUMENTS OR FORMS
1. Staff will prepare and provide breakfast, lunch and PM snack utilizing USDA meal pattern amounts and sizes, thus ensuring the children will receive the recommended 1/2 to 2/3 of their daily nutritional needs. 2. Staff will implement the following meal/snack schedule: Breakfast 7:45 AM Lunch 11:30 AM PM Snack 2:15 PM Changes/modifications in meal times accommodated for children with disabilities where necessary.	-Child Nutrition Director -Child Nutrition Coordinators -Head Cooks -Food Production Staff -Center Mangers -Facilitators -Support Services Assistants -Teachers -Assistant Teachers -Custodians	-Child Nutrition Director -Child Nutrition Coordinators -Head Cooks -Center Managers -Facilitators -Support Services Assistants -Teachers -Assistant Teachers -Custodians	-August thru May (Daily)	-USDA Meal Patterns (3-5 years old) -Menus -TDA Form 1530 (Daily Meal Production Record)
3. Menus will reflect one vitamin C source daily and one vitamin A source three times per week along with the Texas Department of Agriculture recommended modifications (August 14, 2009) initiative "Promoting Healthy Eating and Physical Activity for a Healthier Lifestyle". Parent/guardian will be encouraged to follow the child's daily nutritional needs during off school days.	-All of the above	-All of the above	-August thru May (Daily)	-Menus -TDA Form 1530 (Daily Meal Production Record)

HIDALGO COUNTY START PROGRAM
Child Nutrition Program Plan

PERFORMANCE STANDARD: §1302.44 Child Nutrition

GOAL: The HIDALGO COUNTY HEAD START PROGRAM/EARLY HEAD START will design and implement a nutrition program that meets the nutritional needs and feeding requirements of each child.

OBJECTIVE: To serve quantities and kinds of food which must conform to recommend serving sizes and minimum standards for meal patterns recommended in the USDA meal pattern or nutrient standard menu planning requirements outlined in 7 CFR parts 210, 220, and 226.

TASK TO BE ACCOMPLISHED	PERSON RESPONSIBLE	PERSON RESPONSIBLE FOR MONITORING	PROJECTED DATE OF COMPLETION	DOCUMENTS OR FORMS
1. Staff will ensure that required serving size and quantity of foods be served. Menus will reflect as follows: Breakfast: milk 6 oz., vegetable or fruit ½ c., grains/bread ½ serving. Lunch: milk 6 oz., vegetable or fruit ½ c., grains/bread ½ serving, meat/meat alternate 1 ½ oz. PM Snack: select 2 of 4 components (milk, vegetable or fruit, grains/bread, meat/meat alternate)	-Child Nutrition Director -Child Nutrition Coordinators -Head Cooks -Center Managers -Facilitators -Support Services Assistants -Teachers -Assistant Teachers -Custodians	-Child Nutrition Director -Child Nutrition Coordinators -Head Cooks -Center Managers -Facilitators -Support Service Assistants -Teachers -Assistant Teachers -Custodians	-August thru May (Daily)	-USDA Meal Patterns (3-5 years old) -Menus -TDA Form 1530 (Daily Meal Production Record) -TDA Form H1606 (Monitor Review)

HIDALGO COUNTY START PROGRAM
Child Nutrition Program Plan

PERFORMANCE STANDARD: §1302.44 Child Nutrition

GOAL: The HIDALGO COUNTY HEAD START PROGRAM/EARLY HEAD START will design and implement a nutrition program that meets the nutritional needs and feeding requirements of each child.

OBJECTIVE: To serve food that is high in nutrients and low in fat, sugar and salt.

TASK TO BE ACCOMPLISHED	PERSON RESPONSIBLE	PERSON RESPONSIBLE FOR MONITORING	PROJECTED DATE OF COMPLETION	DOCUMENTS OR FORMS
1. Meat: Lean (90/10 ground beef, 90/10 top boneless sirloin, boneless / skinless chicken breast). Milk: Unflavored, fluid, 1% fat. Vegetable: Frozen or fresh (no canned vegetables). Fruit: Canned fruit is packed in its natural juice or is fresh. Grains/Bread: Must be whole grain.	-Child Nutrition Director -Child Nutrition Coordinators -Head Cooks -Procurement Director	-Child Nutrition Director -Child Nutrition Coordinators -Head Cooks -Procurement Director	-August thru May (Daily) -On-going monitoring	-Menus -Food orders -Requisitions -Purchase orders -Invoices -Food labels -TDA Form 1530 (Daily Production Record)

HIDALGO COUNTY START PROGRAM
Child Nutrition Program Plan

PERFORMANCE STANDARD: §1302.44 Child Nutrition

GOAL: The HIDALGO COUNTY HEAD START PROGRAM/EARLY HEAD START will design and implement a nutrition program that meets the nutritional needs and feeding requirements of each child.

OBJECTIVE: The HIDALGO COUNTY HEAD START PROGRAM/EARLY HEAD START will serve a nourishing breakfast to all children who have not received breakfast at arrival time at the center.

TASK TO BE ACCOMPLISHED	PERSON RESPONSIBLE	PERSON RESPONSIBLE FOR MONITORING	PROJECTED DATE OF COMPLETION	DOCUMENTS OR FORMS
1. Staff will serve a complete and nourishing breakfast every day. In addition, center will stock a few grain/bread items, juice and milk to provide to all late comers breakfast as well.	-Child Nutrition Director -Child Nutrition Coordinator -Head Cooks -Center Managers -Facilitator -Support Services Assistants -Teachers -Assistant Teachers	-Child Nutrition Director -Child Nutrition Coordinators -Center Managers -Facilitators -Support Services Assistants -Teachers -Assistant Teachers	-August thru May (Daily)	-TDA Form H1606 (Monitor Review)

HIDALGO COUNTY START PROGRAM
Child Nutrition Program Plan

PERFORMANCE STANDARD: §1302.44 Child Nutrition

GOAL: The HIDALGO COUNTY HEAD START PROGRAM/EARLY HEAD START will design and implement a nutrition program that meets the nutritional needs and feeding requirements of each child.

OBJECTIVE: To make safe drinking water available to children during the program day.

TASK TO BE ACCOMPLISHED	PERSON RESPONSIBLE	PERSON RESPONSIBLE FOR MONITORING	PROJECTED DATE OF COMPLETION	DOCUMENTS OR FORMS
1. Staff will dispense safe drinking water to children upon request during the program day. 2. Each Classroom will have water readily available in containers/fountains.	-Child Nutrition Director -Child Nutrition Coordinators -Health Director -Health Department Staff -Center Managers -Facilitators -Support Services Assistants -Teachers -Assistant Teachers -Custodians -Volunteers	-Child Nutrition Director -Child Nutrition Coordinators -Health Director -Health Department Staff -Center Managers -Facilitators -Support Services Assistants -Teachers -Assistant Teachers -Custodians -Volunteers	-On-going monitoring	-TDA Form H1606 (Monitor Review Notes)

HIDALGO COUNTY START PROGRAM
Child Nutrition Program Plan

PERFORMANCE STANDARD: §1302.44 Child Nutrition

GOAL: The HIDALGO COUNTY HEAD START PROGRAM/EARLY HEAD START will design and implement a nutrition program that meets the nutritional needs and feeding requirements of each child.

OBJECTIVE: To utilize funds from USDA food and consumer services child nutrition program as the primary source of payment for meal services. Head Start and Early Head Start funds may be used to cover those allowable costs not covered by the USDA.

TASK TO BE ACCOMPLISHED	PERSON RESPONSIBLE	PERSON RESPONSIBLE FOR MONITORING	PROJECTED DATE OF COMPLETION	DOCUMENTS OR FORMS
1. The Finance Department Assistant Bookkeeper will produce a monthly-computerized listing of all TDA expenditures reflecting vendors and dollar amounts to the Child Nutrition Director for verification.	-Executive Program Director -Assistant Program Director -Child Nutrition Director -Finance Director -Assistant Bookkeeper -Procurement Director	-Child Nutrition Director -Finance Director -Procurement Director	-Monthly -October thru September fiscal year -On-going monitoring	-Requisitions -Purchase Orders -Budget -TDA Form 4502 (Claim For Reimbursement Worksheet)

HIDALGO COUNTY START PROGRAM
Child Nutrition Program Plan

PERFORMANCE STANDARD: §1302.31 Teach and the Learning Environment

GOAL: The HIDALGO COUNTY HEAD START PROGRAM/EARLY HEAD START will implement snack and meal time in ways that support development and learning.

OBJECTIVE: To organize and structure learning opportunities for children during meal service and distribution.

TASK TO BE ACCOMPLISHED	PERSON RESPONSIBLE	PERSON RESPONSIBLE FOR MONITORING	PROJECTED DATE OF COMPLETION	DOCUMENTS OR FORMS
1. Teachers will sit with children during family style meal service 2. Conversations will be related to meal provided. 3. Provide forum for children to talk to each other. 4. Allow children sufficient time to consume meal 5. Arrange and facilitate socialization of children during meal time 6. Extend learning unit activities during meal times.	-Child Nutrition Director -Child Nutrition Coordinators -Head Cooks -Education Area Directors -Health Services Director -Special Services Director -Center Managers -Facilitators -Support Services Assistant -Teachers -Assistant Teachers - Custodians	-Child Nutrition Director -Child Nutrition Coordinators -Center Managers -Facilitators -Support Services Assistant -Teachers -Assistant Teachers -Disability Aides -Custodians	-August thru May (Daily) -Annual Self-Assessment -On-going monitoring	- Cycle Menu -TDA Form 1606 (Monitor Review) -Therapeutic Diet Menus as applicable

HIDALGO COUNTY START PROGRAM
Child Nutrition Program Plan

PERFORMANCE STANDARD: §1304.2 Monitoring

GOAL: The HIDALGO COUNTY HEAD START PROGRAM/EARLY HEAD START will identify areas of noncompliance/deficiencies

OBJECTIVE: To monitor all nutrition outcomes to ensure compliance with all Performance Standards

TASK TO BE ACCOMPLISHED	PERSON RESPONSIBLE	PERSON RESPONSIBLE FOR MONITORING	PROJECTED DATE OF COMPLETION	DOCUMENTS OR FORMS
1. Nutrition staff will monitor all nutrition related activities using the following tools a. TDA Form H1606 b. Daily Meal count Attendance Record-Alternate form 1535 c. Special Diet Log d. Classroom Meal Observation e. Children's Records Monitoring Tool (Child Nutrition Services) f. Daily Kitchen Self-Inspection Checklist g. Center Monitoring Worksheet h. Child Nutrition Monitoring Notes	-Child Nutrition Director -Child Nutrition Coordinator -Center Managers -Facilitators -Support Services Assistant -Teachers -Assistant Teachers - Custodians	-Child Nutrition Director -Child Nutrition Coordinators -Center Managers -Facilitators -Support Services Assistant -Teachers -Assistant Teachers -Custodians	-August thru May (Daily) -Annual Self-Assessment -On-going monitoring	- Cycle Menu -TDA Form 1606 (Monitor Review) -Therapeutic Diet Menus as applicable

EDUCATION SERVICES PLAN

Hidalgo County Head Start Program

Education Department Program Plan

2017-2018

Subpart C – Education and Child Development Program Services

1302.30 Purpose

All programs must provide high-quality early education and child development services, including for children with disabilities that promote children's cognitive, social, and emotional growth for later success in school. A center-based or family child care program must embed responsive and effective teacher-child interactions. A home-based program must promote secure parent-child relationships and help parents provide high-quality early learning experiences.

All programs must implement a research-based curriculum, and screening and assessment procedures that support individualization and growth in the areas of development described in the Head Start Early Learning Outcomes Framework: Ages Birth to Five (HSELOF) and support family engagement in children's learning and development. A program must deliver developmentally, culturally, and linguistically appropriate learning experiences in language, literacy, mathematics, social and emotional functioning, approaches to learning, science, physical skills, and creative arts. To deliver such high-quality early education and child development services, a center-based or family child care program must implement, at a minimum, the elements contained in:

1302.31 Teaching and the Learning Environment

1302.32 Curricula

1302.33 Child Screenings and Assessment

1302.34 Parent and Family Engagement in Education and Child Development Services

1302.92 Training and Professional Development

1304.11 Classroom Assessment Scoring System (CLASS)

Hidalgo County Head Start Program

Education Department Program Plan

2017-2018

Performance Standard: 1302.31 (a)

Goal: The HIDALGO COUNTY HEAD START PROGRAM must ensure teachers and other relevant staff provide responsive care, effective teaching and an organized learning environment that promotes healthy development and children's skill growth aligned with Head Start Early Learning Outcomes Framework (HSELOF), including children with disabilities.

Objective: (a)To provide children with developmentally appropriate educational activities that addresses each child's own individual needs, including children with disabilities.

Task to be Accomplished	Person Responsible	Person Responsible for Monitoring	Projected Date of Completion	Documents or Forms
The classroom teacher will participate in training and guidance on the proper implementation of the curriculum and makes modifications as necessary in order to ensure that activities are developmentally appropriate to help all children to achieve success.	Administrator for Education Education Area Directors	Center Manager Administrator for Education Education Area Directors	On-Going	Training Agendas Training Sign-in Rosters On-site Training and Technical Assistance (T/TA) Forms Monitoring Weekly Lesson Plans

Hidalgo County Head Start Program

Education Department Program Plan

2017-2018

Performance Standard: 1302.31 (b) (1) (i)(ii)(iii)(iv)

Goal: The HIDALGO COUNTY HEAD START PROGRAM must ensure teachers and other relevant staff provide responsive care, effective teaching and an organized learning environment that promotes healthy development and children's skill growth aligned with Head Start Early Learning Outcomes Framework (HSELOF), including children with disabilities.

Objective: (b)(1)(i) To encourage development of trust, independence and self-control that enhances each child's individual strengths.

Task to be Accomplished	Person Responsible	Person Responsible for Monitoring	Projected Date of Completion	Documents or Forms
The classroom teacher will build a trusting relationship with each child by: • Warm greetings • Using the child's name at all times • Communicating with the children in their primary language • Providing an environment that is safe and nurturing • Creating positive adult/child interaction • Promoting critical thinking and problem solving • Developing Social Emotional, Behavior and Language Development	Teachers Assistant Teachers	Center Managers Education Area Directors	On-Going	Center Monitoring Form

Hidalgo County Head Start Program

Education Department Program Plan

2017-2018

Performance Standard: 1302.31 (b) (1) (i)(ii)(iii)(iv)

Goal: The HIDALGO COUNTY HEAD START PROGRAM must ensure teachers and other relevant staff provide responsive care, effective teaching and an organized learning environment that promotes healthy development and children's skill growth aligned with Head Start Early Learning Outcomes Framework (HSELOF), including children with disabilities.

Objective: (b)(1)(i) To encourage development of trust, independence and self-control that enhances each child's individual strengths.

Task to be Accomplished	Person Responsible	Person Responsible for Monitoring	Projected Date of Completion	Documents or Forms
The classroom teacher will encourage self-control by setting clear, consistent limits, and establishing realistic expectations by: • Involving children in establishing classroom rules • Providing positive guidance and reinforcement • Establishing high expectations • Giving positive praise and encouragement • Implementing the Positive Behavior Support (PBS) Strategies • Engaging in positive interactions between teachers and children in the CLASS domain of classroom organization	Teachers Assistant Teachers	Center Managers Education Area Directors Mental Health Counselor	On-Going	Center Monitoring Form PBS forms CLASS Observation Tool

Hidalgo County Head Start Program

Education Department Program Plan

2017-2018

Performance Standard: 1302.31 (b) (1) (i)(ii)(iii)(iv)

Goal: The HIDALGO COUNTY HEAD START PROGRAM must ensure teachers and other relevant staff provide responsive care, effective teaching and an organized learning environment that promotes healthy development and children's skill growth aligned with Head Start Early Learning Outcomes Framework (HSELOF), including children with disabilities.

Objective: (b)(1)(i) To encourage development of trust, independence and self-control that enhances each child's individual strengths.

Task to be Accomplished	Person Responsible	Person Responsible for Monitoring	Projected Date of Completion	Documents or Forms
The classroom teacher will encourage children to respect the feelings and rights of others by : • Showing respect to each child by listening and responding to individual needs and addressing their peers by name. • Providing the children with the opportunity to come together as a group (circle time, outdoor play) to enhance their social emotional skills. • Being positive role models by using please, thank you and excuse me. • Targeting the domain of emotional support in CLASS • Using PBS	Teachers Assistant Teachers	Center Managers Education Area Directors	On-Going	Center Monitoring Tool Classroom Observation Tool Abbreviated Form (CLASS) Observation Tool

Hidalgo County Head Start Program

Education Department Program Plan

2017-2018

Performance Standard: 1302.31 (b) (1) (i)(ii)(iii)(iv)

Goal: The HIDALGO COUNTY HEAD START PROGRAM must ensure teachers and other relevant staff provide responsive care, effective teaching and an organized learning environment that promotes healthy development and children's skill growth aligned with Head Start Early Learning Outcomes Framework (HSELOF), including children with disabilities.

Objective: (b)(1)(i) To encourage development of trust, independence and self-control that enhances each child's individual strengths.

Task to be Accomplished	Person Responsible	Person Responsible for Monitoring	Projected Date of Completion	Documents or Forms
The classroom teacher will support and respects home language, culture and family composition of each child in ways that support the child's mental health and well- being by: • Ensuring that all materials and activities in the classroom reflect acceptance and support of the different composition and ethnic background of the families enrolled in the program • Supporting Cross-Cultural Responsiveness and Ethnic backgrounds	Teachers Assistant Teachers	Center Managers Education Area Directors	On-Going	Center Monitoring Form

Hidalgo County Head Start Program

Education Department Program Plan

2017-2018

Performance Standard: 1302.31 (b) (1) (i)(ii)(iii)(iv)

Goal: The HIDALGO COUNTY HEAD START PROGRAM must ensure teachers and other relevant staff provide responsive care, effective teaching and an organized learning environment that promotes healthy development and children's skill growth aligned with Head Start Early Learning Outcomes Framework (HSELOF), including children with disabilities.

Objective: (b)(1)(ii)To provide children with developmental progressions described in the Head Start Early Learning Outcomes Framework: Ages birth to five and the School Readiness Goals, including children with special needs.

Task to be Accomplished	Person Responsible	Person Responsible for Monitoring	Projected Date of Completion	Documents or Forms
Center staff will receive an up-dated alignment document consisting of: • Texas Pre-K Guidelines • HSELOF • Frog Street Pre-K Curriculum • Resources – Picturing America, Kindness Curriculum, Nutrition Lesson • Kindermusik School Readiness Goals are established based on most recent available data to meet the needs of the program and aligned with the HSELOF.	Education Area Directors Center Managers Center Classroom Staff	Program Director Assistant Program Director Administrator for Education Education Area Directors	On-Going	Curriculum and Resources Alignment Guide HSELOF

Hidalgo County Head Start Program

Education Department Program Plan

2017-2018

Performance Standard: 1302.31 (b) (1) (i)(ii)(iii)(iv)

Goal: The HIDALGO COUNTY HEAD START PROGRAM must ensure teachers and other relevant staff provide responsive care, effective teaching and an organized learning environment that promotes healthy development and children's skill growth aligned with Head Start Early Learning Outcomes Framework (HSELOF), including children with disabilities.

Objective: (b)(1)(ii) To provide children with developmental progressions described in the Head Start Early Learning Outcomes Framework: Ages birth to five and the School Readiness Goals, including children with special needs

Task to be Accomplished	Person Responsible	Person Responsible for Monitoring	Projected Date of Completion	Documents or Forms
The classroom teacher will plan and implement daily activities using developmentally appropriate activities from research based resources to provide a well-balanced program of instruction for all children including children with disabilities.	Teachers Assistant Teachers	Center Managers Education Area Directors	On-Going	Classroom Monitoring Checklist Weekly Lesson Plans
To enhance the quality of the instruction, the Program has provided the following Resources: • Frog Street Pre-K Curriculum • Planning Guide • CIRCLE Manual • Journeys Early Literacy & Technology Program • HSELOF • Kindness Curriculum • Head Start Picturing America • Kindermusik	Teachers Assistant Teachers	Center Manager Education Area Directors	On-Going	Curriculum and Resources

Hidalgo County Head Start Program

Education Department Program Plan

2017-2018

Performance Standard: 1302.31 (b) (1) (i)(ii)(iii)(iv)

Goal: The HIDALGO COUNTY HEAD START PROGRAM must ensure teachers and other relevant staff provide responsive care, effective teaching and an organized learning environment that promotes healthy development and children's skill growth aligned with Head Start Early Learning Outcomes Framework (HSELOF), including children with disabilities.

Objective: (b)(1)(iii) To analyze and aggregate data to continuously ensure children's progress through different sources to meet School Readiness Goals and areas designated by the Head Start Early Learning Outcomes Framework: Ages birth to five.

Task to be Accomplished	Person Responsible	Person Responsible for Monitoring	Projected Date of Completion	Documents or Forms
The program will monitor formal and informal assessment data and child individual plans (CIP)	Education Area Director Center Manager Teacher	Program Director Assistant Program Director Administrator for Education Administrative Team	On-Going	Analysis of Learning Accomplishment Profile (LAP-D) Scores DECA CIP
With parent input, a CIP is developed to individualize experiences, instructional strategies, and services to meet the needs of each child.	Classroom Staff	Program Director Assistant Program Director Administrative Team Education Staff Center Managers	On-Going	Analysis of LAP-D Scores Speech Screener DECA CIP

Hidalgo County Head Start Program

Education Department Program Plan

2017-2018

Performance Standard: 1302.31 (b) (1) (i)(ii)(iii)(iv)

Goal: The HIDALGO COUNTY HEAD START PROGRAM must ensure teachers and other relevant staff provide responsive care, effective teaching and an organized learning environment that promotes healthy development and children's skill growth aligned with Head Start Early Learning Outcomes Framework (HSELOF), including children with disabilities.

Objective: (b)(1)(iv) To provide for the development of cognitive skills of children by encouraging each child to organize their experiences to understand concepts and to develop appropriate skills in literacy, numeracy, reasoning, problem solving and decision making to form a foundation for school readiness.

Task to be Accomplished	Person Responsible	Person Responsible for Monitoring	Projected Date of Completion	Documents or Forms
The classroom teacher will use developmentally appropriate strategies and effective teaching practices to encourage the children to learn concepts and skills in critical areas such as: science, social studies, language, literacy, numeracy, art, music/movement etc.	Teachers Assistant Teachers	Education Area Directors Center Managers	On-Going	Weekly Lesson Plan CLASS Observation Tool LAP-D Skills Box

Hidalgo County Head Start Program

Education Department Program Plan

2017-2018

Performance Standard: 1302.31 (b) (2) (i)(ii)(iii)(iv)

Goal: The HIDALGO COUNTY HEAD START PROGRAM must ensure teachers and other relevant staff provide responsive care, effective teaching and an organized learning environment that promotes healthy development and children's skill growth aligned with Head Start Early Learning Outcomes Framework (HSELOF), including children with disabilities.

Objective: (b)(2)(ii) To implement a program that recognizes bilingualism and biliteracy as strengths and implement research-based teaching practices that support their development.

Task to be Accomplished	Person Responsible	Person Responsible for Monitoring	Projected Date of Completion	Documents or Forms
The classroom teacher will support and respect home language, culture and family composition of each child in ways that support the child's mental health and well- being by: • Presenting activities and concepts to children in their primary language • Ensuring that all materials and activities in the classroom reflect acceptance and support of the different composition and ethnic background of the families enrolled in the program • Supporting Cross-Cultural Responsiveness and Ethnic backgrounds	Teachers Assistant Teachers	Mental Health Counselor Education Area Directors Center Managers	On-Going	Center Monitoring Form
The classroom teacher will take into account the dominant language of the children in her/his group when presenting activities and having conversations with them.	Teachers Assistant Teachers	Education Area Directors Center Managers	On-Going	Weekly Lesson Plans Classroom Monitoring Form

Performance Standard: 1302.31 (b) (2) (i)(ii)(iii)(iv)
Goal: The HIDALGO COUNTY HEAD START PROGRAM must ensure teachers and other relevant staff provide responsive care, effective teaching and an organized learning environment that promotes healthy development and children's skill growth aligned with Head Start Early Learning Outcomes Framework (HSELOF), including children with disabilities.
Objective: (b)(2)(ii) To implement a program that recognizes bilingualism and biliteracy as strengths and implement research-based teaching practices that support their development.

Task to be Accomplished	Person Responsible	Person Responsible for Monitoring	Projected Date of Completion	Documents or Forms
The classroom teacher will provide a print rich environment by labeling furniture and items in the classroom; such as doors, shelves, chairs, in both English and Spanish (door-puerta, chair-silla).	Teachers Assistant Teachers	Education Area Directors Center Managers	On-Going	Early Literacy Checklist
The classroom teachers will use the language experience approach to provide materials and opportunities for children to write and see their spoken words (chart tablets, writing center, labeling of children's work/creations, daily news and journals).	Teachers Assistant Teachers	Education Area Directors Center Managers	On-Going	Center Monitoring Form
Classroom teachers will implement a dual language approach, teaching the content areas in the child's primary language of instruction.	Teachers Assistant Teacher	Education Area Directors Center Manager	On-Going	Center Monitoring Form

Hidalgo County Head Start Program

Education Department Program Plan

2017-2018

Performance Standard: 1302.31 (b) (2) (i)(ii)(iii)(iv)

Goal: The HIDALGO COUNTY HEAD START PROGRAM must ensure teachers and other relevant staff provide responsive care, effective teaching and an organized learning environment that promotes healthy development and children's skill growth aligned with Head Start Early Learning Outcomes Framework (HSELOF), including children with disabilities.

Objective: (2)(b)(iii) To provide bilingual services for all classroom.

Task to be Accomplished	Person Responsible	Person Responsible for Monitoring	Projected Date of Completion	Documents or Forms
Staff will be selected and screened to ensure they are highly qualified, nurturing, and sensitive to cultural differences.	Human Resources Staff Education Area Directors Head Start Policy Council	Program Director Administrator for Human Resources	On-Going (as positions are needed)	Job Application Resume Human Resources Files

Performance Standard: 1302.31 (c)(2)
Goal: The HIDALGO COUNTY HEAD START PROGRAM must ensure teachers and other relevant staff provide responsive care, effective teaching and an organized learning environment that promotes healthy development and children's skill growth aligned with Head Start Early Learning Outcomes Framework (HSELOF), including children with disabilities.
Objective: (c)(2) To ensure teachers implement well-organized learning environments with developmentally appropriate schedules, lesson plans, indoor and outdoor learning experiences that provide adequate opportunity for choice, play, exploration and experimentation.

Task to be Accomplished	Person Responsible	Person Responsible for Monitoring	Projected Date of Completion	Documents or Forms
The Weekly Lesson Plan will reflect the following types of activities/opportunities: • Small group • Large group • Individualization • Child Initiated • Adult Initiated The daily schedule is flexible and allows for spontaneous learning, child initiated and teacher directed activities; which also includes activities for Dual Language Learners (DLL) and children with disabilities.	Teachers Assistant Teachers	Center Managers Education Area Directors	On-Going	Daily Schedule Classroom Monitoring Checklist

Performance Standard: 1302.31 (d)
Goal: The HIDALGO COUNTY HEAD START PROGRAM must ensure teachers and other relevant staff provide responsive care, effective teaching and an organized learning environment that promotes healthy development and children's skill growth aligned with Head Start Early Learning Outcomes Framework (HSELOF), including children with disabilities.
Objective: (d) To provide age appropriate equipment, materials, supplies and physical space for indoor and outdoor learning environment, including functional space and accessible to children with special needs.

Task to be Accomplished	Person Responsible	Person Responsible for Monitoring	Projected Date of Completion	Documents or Forms
The teacher will arrange learning centers, offers materials, provides time for children to participate in, and plans activities which are developmentally appropriate for children in the group to encourage: • Open ended questioning • Experimentation and exploration • Self/directed play and observation • Frequent conversations • Repetition and Extension activities • Social Development • Language Development Note: This pertains to the CLASS Domains	Teachers Assistant Teachers	Education Area Directors Center Managers	On-Going	Center Monitoring Form Weekly Lesson Plans CLASS
The classroom teacher will plan and prepare for field trips which are relevant to the curriculum units and which encourage exploration and questioning.	Teachers Assistant Teachers	Education Area Directors Center Managers	Fall and Spring	Field Trip request form Permission Slip

Performance Standard: 1302.31 (d)
Goal: The HIDALGO COUNTY HEAD START PROGRAM must ensure teachers and other relevant staff provide responsive care, effective teaching and an organized learning environment that promotes healthy development and children's skill growth aligned with Head Start Early Learning Outcomes Framework (HSELOF), including children with disabilities.
Objective: (d) To provide age appropriate equipment, materials, supplies and physical space for indoor and outdoor learning environment, including functional space and accessible to children with special needs.

Task to be Accomplished	Person Responsible	Person Responsible for Monitoring	Projected Date of Completion	Documents or Forms
The teacher will arrange the classroom into learning centers, provides materials that are readily available, and plans activities which are appropriate for the children's age and stage of development. The recommended Learning Centers are: • Math/Science • Pretend and Learn • Construction • Writing Center • Computer Center • Art Center • Library and Listening • Music Center Note: Depending on the classroom space, the number of learning centers will vary and will be rotated on a systematic schedule and must be print rich.	Teachers Assistant Teachers	Education Area Directors Center Managers	On-Going	Weekly Lesson Plans Daily Schedule Center Monitoring Form

Hidalgo County Head Start Program

Education Department Program Plan

2017-2018

Performance Standard: 1302.31 (d)

Goal: The HIDALGO COUNTY HEAD START PROGRAM must ensure teachers and other relevant staff provide responsive care, effective teaching and an organized learning environment that promotes healthy development and children's skill growth aligned with Head Start Early Learning Outcomes Framework (HSELOF), including children with disabilities.

Objective: (d) To provide age appropriate equipment, materials, supplies and physical space for indoor and outdoor learning environment, including functional space and accessible to children with special needs.

Task to be Accomplished	Person Responsible	Person Responsible for Monitoring	Projected Date of Completion	Documents or Forms
The classroom teacher will plan and provide developmentally appropriate activities for the children to encourage the use of their fine motor skills and eye/ hand coordination and make adaptations for children with special needs. Note: This pertains to the CLASS domain of Classroom Organization.	Teachers Assistant Teachers	Education Area Directors Center Managers	On-Going	Weekly Lesson Plans CLASS

Hidalgo County Head Start Program

Education Department Program Plan

2017-2018

Performance Standard: 1302.31 (e)(1)(2)(3)(4)

Goal: The HIDALGO COUNTY HEAD START PROGRAM must ensure Teachers and other relevant staff provide responsive care, effective teaching and an organized learning environment that promotes healthy development and children's skill growth aligned with Head Start Early Learning Outcomes Framework, (HSELOF), including children with disabilities.

Objective: (e)(1) To implement age appropriate approach to accommodate children's need to nap or rest.

Task to be Accomplished	Person Responsible	Person Responsible for Monitoring	Projected Date of Completion	Documents or Forms
The program will provide a nap or rest period with an alternative quiet learning activity.	Classroom staff	Center Manager	On-Going	Weekly Lesson Plans

Hidalgo County Head Start Program

Education Department Program Plan

2017-2018

Performance Standard: 1302.31 (e)(1)(2)(3)(4)

Goal: The HIDALGO COUNTY HEAD START PROGRAM must ensure teachers and other relevant staff provide responsive care, effective teaching and an organized learning environment that promotes healthy development and children's skill growth aligned with Head Start Early Learning Outcomes Framework (HSELOF), including children with disabilities.

Objective: (e)(2) To implement snack and meal times in ways that support development and learning.

Task to be Accomplished	Person Responsible	Person Responsible for Monitoring	Projected Date of Completion	Documents or Forms
Snack and meal time will be structured and used as learning opportunities that support teaching staff-child interactions. Practicing family style serving where local health departments allow it. Using the "Helping Hands" and similar management charts in the classroom. Provide sufficient time for children to eat. Do not use food as a reward or punishment and not force children to finish their food.	Classroom staff	Education Area Directors Center Managers	On-Going	Weekly Menu Weekly Lesson Plans Discipline and Guidance Policy

Performance Standard: 1302.31 (e)(1)(2)(3)(4)
Goal: The HIDALGO COUNTY HEAD START PROGRAM must ensure teachers and other relevant staff provide responsive care, effective teaching and an organized learning environment that promotes healthy development and children's skill growth aligned with Head Start Early Learning Outcomes Framework (HSELOF), including children with disabilities.
Objective: (e)(3) To provide routines and transitional activities that strengthen development learning, and skill growth.

Task to be Accomplished	Person Responsible	Person Responsible for Monitoring	Projected Date of Completion	Documents or Forms
The classroom teacher will follow a daily schedule and provide consistent routines to ensure that the children know at all times what is happening in the classroom. A daily schedule with pictures is posted at children's eye level in each classroom.	Teachers Assistant Teachers	Center Managers Education Area Directors	On-Going	Daily Schedule
The classroom teacher will implement transitional songs based on unit of study to help children recognize signs of preparing for or completing a task. NOTE: This pertains to the CLASS domain of Classroom Organization.	Teachers Assistant Teachers	Center Managers Education Area Directors	On-Going	Daily Schedule Weekly Lesson Plans CLASS Observation Tool

Hidalgo County Head Start Program

Education Department Program Plan

2017-2018

Performance Standard: 1302.31 (e)(1)(2)(3)(4)

Goal: The HIDALGO COUNTY HEAD START PROGRAM must ensure teachers and other relevant staff provide responsive care, effective teaching and an organized learning environment that promotes healthy development and children's skill growth aligned with Head Start Early Learning Outcomes Framework (HSELOF), including children with disabilities.

Objective: (e)(4) To provide time, indoor and outdoor space, equipment, materials, and adult guidance for active play and movement to support the development of each child's gross motor skills.

Task to be Accomplished	Person Responsible	Person Responsible for Monitoring	Projected Date of Completion	Documents or Forms
The daily schedule will include time for guided, independent, indoor, and outdoor activities for the development of gross motor skills. It is recommended to include outdoor play both in the morning and in the afternoon time. Some of the equipment used includes: climbing apparatuses, tricycles, swings, balance beams, musical instruments, etc.	Teachers Assistant Teachers	Center Managers Education Area Directors	On-Going	Weekly Lesson Plans Center Monitoring Form Daily Schedule
The classroom teacher will be actively involved with the children during games and motor development activities to ensure a safe and active learning.	Teachers Assistant Teachers	Center Managers Education Area Directors	On-Going	Center Monitoring Form

Hidalgo County Head Start Program

Education Department Program Plan

2017-2018

Performance Standard: 1302.32 (a)(1)(i)(ii)(iii)
Goal: The HIDALGO COUNTY HEAD START PROGRAM implements a developmentally appropriate researched-based early childhood curricula, including additional curricular enhancement as appropriate.
Objective: (a)(1)(i) To provide a scientific valid research-based curricula and have standard training procedures and curriculum materials to support implementation.

Task to be Accomplished	Person Responsible	Person Responsible for Monitoring	Projected Date of Completion	Documents or Forms
The classroom teacher will plan and implement daily activities using developmentally appropriate teaching strategies from research based resources to provide a well-balanced program of instruction	Teachers Assistant Teachers	Center Managers Education Area Directors	On-Going	Classroom Monitoring Checklist Weekly Lesson Plans
To enhance the quality of instruction, the Program will provide the following Resources: • Frog Street Pre-K Curriculum • Planning Guide • Center for Improving the Readiness of Children for Learning and Education (CIRCLE) Manual • Journeys Early Literacy & Technology Program • HSELOF • Mental Health/Kindness • Head Start Picturing America • Kindermusik	Teachers Assistant Teachers	Center Manager Education Area Directors	On-Going	Curriculum and Resources

Hidalgo County Head Start Program

Education Department Program Plan

2017-2018

Performance Standard: 1302.32 (a)(1)(i)(ii)(iii)
Goal: The HIDALGO COUNTY HEAD START PROGRAM implements a developmentally appropriate researched-based early childhood curricula, including additional curricular enhancement as appropriate. .
Objective: (a)(1)(ii) To align the School Readiness Goals with the required Head Start Early Learning Outcomes Framework (HSELOF) document specified by office of Head Start and communicate the purpose and rationale to the staff.

Task to be Accomplished	Person Responsible	Person Responsible for Monitoring	Projected Date of Completion	Documents or Forms
Center staff will receive an up-dated alignment document consisting of: • Texas Pre-K Guidelines • HSELOF • Frog Street Pre-K Curriculum • Other Resources School Readiness Goals are established based on most recent available data to meet the needs of the program.	Education Area Director Center Managers Center Classroom Staff	Program Director Assistant Program Director Administrator for Education	On-Going	Curriculum and Resources Alignment Guide

Hidalgo County Head Start Program

Education Department Program Plan

2017-2018

Performance Standard: 1302.32 (a)(1)(i)(ii)(iii)
Goal: The HIDALGO COUNTY HEAD START PROGRAM implements a developmentally appropriate researched-based early childhood curricula, including additional curricular enhancement as appropriate.
Objective: (a)(1)(iii) To provide an organized developmental scope and sequence that includes plans and materials for learning experiences based on developmental progressions and how children learn.

Task to be Accomplished	Person Responsible	Person Responsible for Monitoring	Projected Date of Completion	Documents or Forms
The program will implement Frog Street Pre-K Curriculum which contains an organized scope and sequence and integrates instruction across developmental domains and early learning disciplines.	Teachers Assistant Teachers	Center Managers Education Area Directors Administrator for Education	On-Going	Frog Street Manual and Resources
Teachers will be provided with a resource binder that includes lesson plans, activities and materials aligned with the Frog Street Pre-K Curriculum.	Center Managers	Center Managers Education Area Directors Administrator for Education	On-Going	Curriculum Binder

Hidalgo County Head Start Program

Education Department Program Plan

2017-2018

Performance Standard: 1302.32 (a)(2)
Goal: The HIDALGO COUNTY HEAD START PROGRAM implements a developmentally appropriate researched-based early childhood curricula, including additional curricular enhancement as appropriate.
Objective: (a)(2) To support staff to effectively implement curricula with fidelity and provide support, feedback and supervision for continuous improvement.

Task to be Accomplished	Person Responsible	Person Responsible for Monitoring	Projected Date of Completion	Documents or Forms
Teachers will be provided with professional Staff Development in the following areas: • HSELOF • CLASS Observation Tool • LAP-D Assessment Testing Data Analysis • Curriculum and Alignment • Frog Street Lesson Plan • Dual Language Learners • Effective Teaching Practices/Strategies in Early Childhood Classrooms • Special Needs Children	Education Area Directors	Administrator for Education Staff Development Director	On-Going	Training Sign-in Roster Training Handouts Certificates Staff Development Training/Questionnaire
Teacher will be monitored on a daily basis to ensure Implementation with curriculum fidelity, consistency, frequency and intensity to ensure children's mastery of skills	Center Manager	Administrator for Education Education Area Directors	On-Going	Classroom Visit Log Classroom Observation Abbreviated Form

Hidalgo County Head Start Program

Education Department Program Plan

2017-2018

Performance Standard: 1302.32 (a)(2)
Goal: The HIDALGO COUNTY HEAD START PROGRAM implements a developmentally appropriate researched-based early childhood curricula, including additional curricular enhancement as appropriate.
Objective: (a)(2) To support staff to effectively implement curricula with fidelity and provide support, feedback and supervision for continuous improvement.

Task to be Accomplished	Person Responsible	Person Responsible for Monitoring	Projected Date of Completion	Documents or Forms
New teachers and experienced teachers in need of assistance will be provided with training, technical assistance and support to ensure a high quality of instruction. The following training opportunities will be provided: • Beginning Teacher Series • New Employees Orientation • NCQTL – Engaging Interactions and Environments In-service Suites • Practice Based Coaching (PBC) - Mentoring and Coaching Program • Curriculum fidelity implementation is monitored by reviewing lesson plans, daily classroom visits and providing feedback as needed.	Education Area Directors Center Manager	Administrator for Education	On-Going	Training Sign-in Roster Training Handouts Certificate Staff Development Training/Questionnaire
The classroom teacher will modify and/or enrich the curriculum (as needed) in order to meet the needs of all children.	Teachers Assistant Teachers	Center Managers Education Area Director	On-Going	Weekly Lesson Plans CIP

Hidalgo County Head Start Program

Education Department Program Plan

2017-2018

Performance Standard: 1302.33 (a)(1)(2)(3)(4)(5)
Goal: The HIDALGO COUNTY HEAD START PROGRAM in collaboration with parents and with parental consent must complete a current developmental screening to identify concerns regarding a child's developmental skills within 45 days of enrollment.
Objective: (a)(1) To use all available resources and methods to ensure that quality services are provided to each child.

Task to be Accomplished	Person Responsible	Person Responsible for Monitoring	Projected Date of Completion	Documents or Forms
The classroom teacher, with cooperation from parents/guardians and other professional consultants as necessary, will meet to identify any developmental concerns. • Parent Interviews • Assessments / Screening data • Teacher observations • Teacher progress notes	Teachers Parents Educational Consultants	Center Manager Education Area Directors Administrator for Education	Within 45 days of enrollment On-Going	CIP Progress Notes Observations Assessment Results

Hidalgo County Head Start Program

Education Department Program Plan

2017-2018

Performance Standard: 1302.33 (a)(2)
Goal: The HIDALGO COUNTY HEAD START PROGRAM in collaboration with parents and with parental consent must complete a current developmental screening to identify concerns regarding a child's developmental skills within 45 days of enrollment.
Objective: (a)(2) To administer a research-based developmental standardized screening to determine how the program can best address each child's individual needs

Task to be Accomplished	Person Responsible	Person Responsible for Monitoring	Projected Date of Completion	Documents or Forms
The classroom teacher will assess the developmental level of each child upon their entry into the program using the following researched-based instruments: • LAP-D • DECA	Teachers Assistant Teachers	Center Managers Education Area Directors Special Services Director Mental Health Counselor	At time of enrollment within 45 days for Pre As needed thereafter for MID & Post	LAP-D Assessment Language Survey DECA Instrument Speech Screener
The classroom teacher will discuss the results of all the screenings and assessments after each administration with the parents / guardians in their dominant language. Together they develop an Individual Plan for their child.	Teachers Assistant Teachers	Center Managers Education Area Directors	Three times a year after each assessment Fall–Spring Home Visit	LAP-D Assessment Results Parent/Teacher Conference Home Visit Form

Hidalgo County Head Start Program

Education Department Program Plan

2017-2018

Performance Standard: 1302.33 (a)(3)(i)(ii)(4)(5)
Goal: The HIDALGO COUNTY HEAD START PROGRAM in collaboration with parents and with parental consent must complete a current developmental screening to identify concerns regarding a child's developmental skills within 45 days of enrollment.
Objective: (a)(3)(i)(ii)To utilize information from developmental, sensory and behavioral screening, ongoing observations, medical and dental evaluations, and insight from parents to determine if a child needs further evaluation from local agency responsible for implementing IDEA.

Task to be Accomplished	Person Responsible	Person Responsible for Monitoring	Projected Date of Completion	Documents or Forms
The classroom staff will engage parents in discussing information gathered from observations, physicals, screenings, assessments, etc. to plan for individual needs.	Teachers Assistant Teachers	Center Managers Education Area Directors Administrator for Education	Upon Enrollment (within 45 or 90 days)	Physical Exams Classroom Observation Assessment Instrument (LAP-D, DECA)
The classroom staff will observe the children during classroom activities and records progress and or changes. The data gathered is shared with parents during parent conferences, home visits, etc.	Teachers Assistant Teachers	Center Managers Education Area Directors Administrator for Education	On-Going	Progress Notes Home Visits Parent/Teacher Conference Form
The classroom staff and other relevant staff will partner with child's parents and the Local Education Agency to support families through the formal evaluation process.	Teachers Assistant Teachers Support Service Assistants Center Manager	Education Area Directors Administrator for Education	On-Going	Inter-Agency Referral Form

Performance Standard: 1302.33 (b)(1)
Goal: The HIDALGO COUNTY HEAD START PROGRAM in collaboration with parents and with parental consent must complete a current developmental screening to identify concerns regarding a child's developmental skills within 45 days of enrollment.
Objective: (b)(1)To individualize activities of all children, including children with disabilities and plan according to their individual needs and strengths.

Task to be Accomplished	Person Responsible	Person Responsible for Monitoring	Projected Date of Completion	Documents or Forms
The classroom teacher will group the children based on data gathered from assessments according to specific needs and levels of development aligned to the goals described in the HSELOF.	Teachers Assistant Teachers	Center Managers Education Area Directors Administrator for Education	On-Going	LAP-D Assessment Results Weekly Lesson Plans Individual Educational Plan (IEP)
The teacher will provide activities to help children grow and respond to their individual needs and strengths.	Teachers Assistant Teachers	Center Managers Education Area Directors Administrator for Education	On-Going	LAP-D Assessment Results Weekly Lesson Plans IEP
The classroom teacher will provide children with individualized assistance during small group activity and throughout the day as needed to meet their specific needs.	Teachers Assistant Teachers	Center Managers Education Area Directors Administrator for Education	On-Going	LAP-D Assessment Results Weekly Lesson Plans IEP

Performance Standard: 1302.33 (b)(2)
Goal: The HIDALGO COUNTY HEAD START PROGRAM in collaboration with parents and with parental consent must complete a current developmental screening to identify concerns regarding a child's developmental skills within 45 days of enrollment.
Objective: (b)(2)To support each child's individual patterns of development and learning.

Task to be Accomplished	Person Responsible	Person Responsible for Monitoring	Projected Date of Completion	Documents or Forms
The children will be grouped according to their developmental level and will be provided with activities to help them meet their educational needs.	Teachers Assistant Teachers	Center Managers Education Area Directors Administrator for Education	On-Going	Weekly Lesson Plans LAP-D Assessment and Reports
Parents will be provided home activities for their child reinforcing their individual skill development areas.	Teachers Assistant Teachers	Center Managers Education Area Directors Administrator for Education	On-Going	Take-home Activities Form LAP-D Assessment and Reports

Hidalgo County Head Start Program

Education Department Program Plan

2017-2018

Performance Standard: 1302.33 (b)(2)
Goal: The HIDALGO COUNTY HEAD START PROGRAM in collaboration with parents and with parental consent must complete a current developmental screening to identify concerns regarding a child's developmental skills within 45 days of enrollment.
Objective: (b)(2)To support each child's individual patterns of development and learning.

Task to be Accomplished	Person Responsible	Person Responsible for Monitoring	Projected Date of Completion	Documents or Forms
With parent input, a CIP will be developed to individualize experiences, instructional strategies, and services to meet the needs of each child.	Teachers Assistant Teachers	Center Manager Education Area Director Administrator for Education	On-Going	Analysis of LAP-D Scores Speech Screener DECA CIP IEP
Data from screenings and assessments will be gathered to make informed decisions on children's progress.	Teachers Assistant Teachers	Center Manager Education Area Director Administrator for Education	On-Going	LAP-D DECA Speech Screener

Hidalgo County Head Start Program

Education Department Program Plan

2017-2018

Performance Standard:1302.33 (b)(3)
Goal: The HIDALGO COUNTY HEAD START PROGRAM in collaboration with parents and with parental consent must complete a current developmental screening to identify concerns regarding a child's developmental skills within 45 days of enrollment.
Objective: (b)(3) To provide children with activities and experiences to enhance their growth and development.

Task to be Accomplished	Person Responsible	Person Responsible for Monitoring	Projected Date of Completion	Documents or Forms
The classroom teacher will use a variety of screening/ assessment instruments, progress notes, observation notes, and individual plans to support the children's learning and developmental progress.	Teachers Assistant Teachers	Center Managers Education Area Directors	Within 45/90 Days of Enrollment On-Going	LAP-D Assessment Report CIP Classroom Observation Notes Progress Notes Progress Reports DECA
If warranted, a child will be referred to local agencies responsible for implementing Individuals with Disabilities Education Act (IDEA) for a formal evaluation.	Teachers Assistant Teachers Center Managers	Education Area Directors Administrator for Education Special Services Dept.	On-Going	Inter-Agency Referral Form

Performance Standard: 1302.33 (c)(1)(2)(3)(4)
Goal: The HIDALGO COUNTY HEAD START PROGRAM in collaboration with parents and with parental consent must complete a current developmental screening to identify concerns regarding a child's developmental skills within 45 days of enrollment.
Objective: (c)(1)(2)(3) To provide children with developmentally appropriate screenings and assessments that address each child's individual needs including language and cultural backgrounds.

Task to be Accomplished	Person Responsible	Person Responsible for Monitoring	Projected Date of Completion	Documents or Forms
The classroom teachers will be selected and screened to ensure that they are highly qualified, nurturing and sensitive to cultural differences.	Education Dept. Human Resources Dept. Head Start Policy Council	Head Start Program Director Administrator for Human Resources Administrator for Education	On-Going	Job application Résumé Human Resources files Transcript/Interview
The classroom teacher will complete a language survey for each child entering the program which helps them to identify child's dominant language.	Teachers Assistant Teachers	Center Managers Education Area Directors Administrator for Education	Within three weeks of enrollment	Language Survey
The primary language of instruction and assessment for the child will be determined using the Language Survey.	Teachers Assistant Teachers	Center Managers Education Area Directors Administrator for Education	On-Going	Language Survey

Hidalgo County Head Start Program

Education Department Program Plan

2017-2018

Performance Standard: 1302.33 (c)(1)(2)(3)(4)
Goal: The HIDALGO COUNTY HEAD START PROGRAM in collaboration with parents and with parental consent must complete a current developmental screening to identify concerns regarding a child's developmental skills within 45 days of enrollment.
Objective: (c)(3)(4) To provide children with developmentally appropriate educational resources that address each child as an individual with different rates of development, interests, temperaments, languages, cultural backgrounds, and learning styles.

Task to be Accomplished	Person Responsible	Person Responsible for Monitoring	Projected Date of Completion	Documents or Forms
Child's Individual Report will be shared with parents after each assessment in their dominant language.	Teachers Assistant Teachers	Center Managers Education Area Directors Administrator for Education	On-Going after each assessment	LAP-D Assessment Report Parent/Teacher Conference Home Visit Form
The program will hire an interpreter to conduct screening and assessments in conjunction with a qualified staff to accurately administer assistance to children whose dominant language is not English and Spanish including sign language.	Teachers Assistant Teachers	Center Managers Education Area Directors Administrator for Education	On-Going	

Hidalgo County Head Start Program

Education Department Program Plan

2017-2018

Performance Standard: 1302.34 (a)(b)(1-8)
Goal: The HIDALGO COUNTY HEAD START PROGRAM must structure education and child development services to encourage parents to engage in their child's education.
Objective: (a)(b)(1) To recognize parents as children's lifelong educators and to encourage them to become involved in their child's education and in the program's policies, procedures and educational services.

Task to be Accomplished	Person Responsible	Person Responsible for Monitoring	Projected Date of Completion	Documents or Forms
Parents will have accessibility to our services and are encouraged to visit our facilities during hours of operation from 7:45 a.m. to 5:15 p.m.	Teachers Assistant Teachers Center Managers	Education Area Directors Family Services Staff	On-Going	Sign-in logs
Parent handbook will be is distributed during Parent's orientation and posted at the Center's Parent's Corner Bulletin, area.	Teacher Teacher Assistants	Center Manager	On-going	Parent Handbook Agenda Sign-In Logs

Hidalgo County Head Start Program

Education Department Program Plan

2017-2018

Performance Standard: 1302.34 (a)(b)(1-8)
Goal: The HIDALGO COUNTY HEAD START PROGRAM must structure education and child development services to encourage parents to engage in their child's education.
Objective: (a)(b)(2) To recognize parents as children's lifelong educators and to encourage them to become involved in their child's education and in the program's policies, procedures and educational services.

Task to be Accomplished	Person Responsible	Person Responsible for Monitoring	Projected Date of Completion	Documents or Forms
Parents will be provided with a bi-monthly Parent, Family and Community Engagement Framework (PFCEF) calendar of activities to enhance learning experiences at home.	Teachers Assistant Teachers Center Managers	Family Services Staff Education Area Directors Administrator for Education	On-Going	PFCEF Calendar of Activities
The classroom teacher and the parents will communicate regularly to discuss routines, children's behavior and developmental progress.	Teachers Assistant Teachers	Center Managers Education Area Directors Administrator for Education	On-Going	Home Visits Parent/ Teacher Conferences Progress Notes

Hidalgo County Head Start Program

Education Department Program Plan

2017-2018

Performance Standard: 1302.34 (a)(b)(1-8)
Goal: The HIDALGO COUNTY HEAD START PROGRAM must structure education and child development services to encourage parents to engage in their child's education.
Objective: (a)(b)(3) To recognize parents as children's lifelong educators and to encourage them to become involved in their child's education and in the program's policies, procedures and educational services.

Task to be Accomplished	Person Responsible	Person Responsible for Monitoring	Projected Date of Completion	Documents or Forms
The classroom teacher will conduct parent / teacher conferences three times a year and as needed to: • Inform parents of their child's progress and discuss results of any screening and assessment • Engage them in the development of their CIP	Teachers Assistant Teachers Center Managers	Education Area Directors Administrator for Education	On-Going	Parent/Teacher Conference Progress Report

Performance Standard: 1302.34 (a)(b)(1-8)
Goal: The HIDALGO COUNTY HEAD START PROGRAM must structure education and child development services to encourage parents to engage in their child's education.
Objective: (a)(b)(4) To recognize parents as children's lifelong educators and to encourage them to become involved in their child's education and in the program's policies, procedures and educational services.

Task to be Accomplished	Person Responsible	Person Responsible for Monitoring	Projected Date of Completion	Documents or Forms
Parents will be encouraged to participate in the Education Department Program Planning Process by being part of the Advisory Committee.	Center Managers Teachers Assistant Teachers	Education Area Directors Administrator for Education	April	Advisory Committee Minutes
Parents will be encouraged to share their ideas, books, music, and foods that are relevant to their culture through interviews, the "Suggestion Box" at the center, during their participation in lesson planning, home visits, annual nutrition contest and during the scheduled Parents/Teacher Conferences	Center Managers Teachers Assistant Teachers	Education Directors Administrator for Education	On-Going	Home Visit Record Parent /Teacher Conferences Suggestion Box Lesson Plan

Hidalgo County Head Start Program

Education Department Program Plan

2017-2018

Performance Standard: 1302.34 (a)(b)(1-8)
Goal: The HIDALGO COUNTY HEAD START PROGRAM must structure education and child development services to encourage parents to engage in their child's education.
Objective: (a)(b)(5) To recognize parents as children's lifelong educators and to encourage them to become involved in their child's education and in the program's policies, procedures and educational services.

Task to be Accomplished	Person Responsible	Person Responsible for Monitoring	Projected Date of Completion	Documents or Forms
Classroom teachers will encourage parents to participate in classroom activities such as: • Special celebrations (Fall, Winter or Spring) • Preparing ethnic foods (Nutrition Contest) • Sharing music, stories, traditions, etc. • Art projects • Volunteering in the classroom and field trips	Center Managers Teachers Assistant Teachers	Education Area Directors Center Managers	On-Going	Volunteer Sign In Logs Weekly Lesson Plans

Hidalgo County Head Start Program

Education Department Program Plan

2017-2018

Performance Standard: 1302.34 (a)(b)(1-8)
Goal: The HIDALGO COUNTY HEAD START PROGRAM must structure education and child development services to encourage parents to engage in their child's education.
Objective: (a)(b)(6) To recognize parents as children's lifelong educators and to encourage them to become involved in their child's education and in the program's policies, procedures and educational services.

Task to be Accomplished	Person Responsible	Person Responsible for Monitoring	Projected Date of Completion	Documents or Forms
Teachers will inform parents about the purpose and results from screenings and assessments. The child's progress is discussed after each assessment three times a year.	Center Managers Teachers Assistant Teachers	Education Area Directors Administrator for Education	On-Going	Parent/Teacher Conference Lap-D Assessment Report

Hidalgo County Head Start Program

Education Department Program Plan

2017-2018

Performance Standard: 1302.34 (a)(b)(1-8)
Goal: The HIDALGO COUNTY HEAD START PROGRAM must structure education and child development services to encourage parents to engage in their child's education.
Objective: (a)(b)(7) To recognize parents as children's lifelong educators and to encourage them to become involved in their child's education and in the program's policies, procedures and educational services.

Task to be Accomplished	Person Responsible	Person Responsible for Monitoring	Projected Date of Completion	Documents or Forms
The classroom teacher will conduct two home visits during the Fall and Spring semester. Additional home visits are done as needed throughout the program year.	Teachers Assistant Teachers Center Managers	Education Area Directors Administrator for Education	On-Going	Home Visit Form
If feasible, first home visits will be done before the beginning of the school year.	Teachers Assistant Teachers Center Manager	Education Area Directors Administrator for Education	On-Going	Home Visit Form

Hidalgo County Head Start Program

Education Department Program Plan

2017-2018

Performance Standard: 1302.92 (c)(1)(2)(3)(4)(5)
Goal: The HIDALGO COUNTY HEAD START PROGRAM must implement a researched based, coordinated coaching strategy for classroom staff.
Objective: (c)(1)(2) To provide an intensive mentoring/coaching program to assist teachers in enhancing their skills in effective teaching practices.

Task to be Accomplished	Person Responsible	Person Responsible for Monitoring	Projected Date of Completion	Documents or Forms
All classroom staff will be assessed to identify strengths and areas of needed support.	Center Managers Education Area Directors	Administrator for Education	On-Going	Lap-D Reports CLASS Observations
Staff will be provided intensive coaching as needed with additional support in the following areas as outlined in the HSELOF and the School Readiness Goals: • Approaches to Learning • Social and Emotional Development • Language and Literacy • Cognition • Perceptual, Motor and Physical Development	Center Managers Education Area Directors	Administrator for Education	On-Going	Training Agendas

Hidalgo County Head Start Program

Education Department Program Plan

2017-2018

Performance Standard: 1302.92 (c)(1)(2)(3)(4)(5)
Goal: The HIDALGO COUNTY HEAD START PROGRAM must implement a researched based, coordinated coaching strategy for classroom staff.
Objective: (c)(3)(4) To provide an intensive mentoring/coaching program to assist teachers in enhancing their skills in effective teaching practices.

Task to be Accomplished	Person Responsible	Person Responsible for Monitoring	Projected Date of Completion	Documents or Forms
The program will provide opportunities for all staff to receive intensive coaching through research based professional development aligned with program goals.	Center Managers Education Area Directors	Administrator for Education	On-Going	Training Agendas
Intensive coaching opportunities will be provided for identified staff aligned with the programs school readiness goals, curricula and professional development. • Practice-Based Coaching (PBC) model will be utilized • PBC is a cyclical process for supporting teacher's use of effective teaching practices that lead to positive outcomes for children	Education Area Directors	Administrator for Education	On-Going	Training Agendas PBC Model Manual

Hidalgo County Head Start Program

Education Department Program Plan

2017-2018

Performance Standard: 1302.92 (c)(1)(2)(3)(4)(5)
Goal: The HIDALGO COUNTY HEAD START PROGRAM must implement a researched based, coordinated coaching strategy for classroom staff.
Objective: (c)(3)(4)(5) To provide an intensive mentoring/coaching program to assist teachers in enhancing their skills in effective teaching practices.

Task to be Accomplished	Person Responsible	Person Responsible for Monitoring	Projected Date of Completion	Documents or Forms
The program will implement two types of coaching formats: • Expert Coaches - Provide intensive coaching to teachers identified as Priority 1 and Priority 2 • Peer Coaches – assist teachers needing additional support identified as Priority 3 - *Priority teachers will be identified based on LAP-D and CLASS data analysis outcomes.*	Peer Coaches Center Managers Education Area Directors	Administrator for Education	On-Going	Lap-D Reports CLASS Observations PBC Model Manual Plan of Action
The program will provide on-going monitoring and communication between Coach, Center Manager, Area Director and any other relevant staff	Center Managers Education Area Directors	Administrator for Education	On-Going	
The program will ensure that the coaching model process and assessment results are not used solely to determine punitive actions for staff identified as needing support	Education Area Directors	Administrator for Education	On-Going	

Hidalgo County Head Start Program

Education Department Program Plan

2017-2018

Performance Standard: 1304.11 (c)(1)(2)
Goal: The HIDALGO COUNTY HEAD START PROGRAM engages in ensuring that an average score across all classrooms do not fall below the minimum thresholds on any of the CLASS domains.
Objective: (c)(1)To communicate to all parties involved in the CLASS observation tool and classroom strategies ensuring that the program does not fall below the minimum threshold on any of the three CLASS domains.

Task to be Accomplished	Person Responsible	Person Responsible for Monitoring	Projected Date of Completion	Documents or Forms
Training will be provided for center managers, classroom staff and directors so that staff has full understanding of the Domains, Dimensions, Indicators and Behavior Markers of the CLASS instrument Training will be provided on Domains and teaching strategies to support each area is scheduled as needed. Staff will be informed of the Office of Head Start minimum threshold scores and strives to maintain or exceed the scores. • Emotional Support™ Score of 4.00 • Classroom Organization™ Score of 3.00 • Instructional Support™ Score of 2.00	Education Area Directors Center Managers Center Classroom Staff	Program Director Assistant Program Director Administrator for Education	On-Going	CLASS Tool

Hidalgo County Head Start Program

Education Department Program Plan

2017-2018

Performance Standard: 1304.11 (c)(1)(2)
Goal: The HIDALGO COUNTY HEAD START PROGRAM engages in ensuring that an average score across all classrooms do not fall below the minimum thresholds on any of the CLASS domains.
Objective: (c)(2) To communicate to all parties involved in the CLASS observation tool and classroom strategies ensuring that the program meets the Minimum Standards.

Task to be Accomplished	Person Responsible	Person Responsible for Monitoring	Projected Date of Completion	Documents or Forms
The program will assure that it does not fall within the lowest 10 % score across all CLASS Domains. *(unless)* The average of all Domains is equal to or above the Standards of Excellence Score of 6 OHS CLASS Descriptive Statistics, 2016 National Grantee-Level Scores by Domain Domain / Mean / Standard Deviation / Minimum / Maximum Emotional Support: 6.00 / 0.29 / 4.95 / 6.77 Classroom Organization: 5.73 / 0.35 / 4.67 / 6.55 Instructional Support: 2.83 / 0.52 / 1.62 / 5.17	Education Staff	Program Director Assistant Program Director Administrator for Education	On-Going	CLASS National Statistics Report

Hidalgo County Head Start Program

Education Department Program Plan

2017-2018

Performance Standard: 1304.11 (c)(2)
Goal: The HIDALGO COUNTY HEAD START PROGRAM engages in ensuring that an average score across all classrooms do not fall below the minimum thresholds on any of the CLASS domains.
Objective: (c)(2) To communicate to all parties involved in the CLASS observation tool and classroom strategies ensuring that the program does not fall below the Standards of Excellence.

Task to be Accomplished	Person Responsible	Person Responsible for Monitoring	Projected Date of Completion	Documents or Forms
To reach Standards of Excellence, the Hidalgo County Head Start Program will: • Continues to monitor using aggregated data assuring success in all systems and programs being implemented. • Staff Development planning will be utilized based on results analysis and teacher trainings will be focused and intentional.	Education Staff	Administrator for Education	On-going	CLASS Reports LAP-D Scores Plan of Action Training Agendas

FAMILY SERVICES PLAN

Hidalgo County Head Start Program

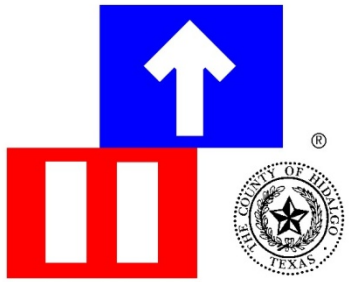

Family & Community Partnerships Program Plans

2017– 2018

Family Services Advisory Committee Approval: 04.27.17
Hidalgo County Policy Council Approval:
Hidalgo County Commissioners' Court Approval:

HIDALGO COUNTY HEAD START PROGRAM
FAMILY SERVICES DEPARTMENT PROGRAM PLAN
Subpart E- Family and Community Engagement Program Services
2017 – 2018

Performance Standard: 1302.50 Family Engagement.

Goal: **To integrate parent and family engagement strategies into all systems and program services to support family well-being and promote children's learning and development including environment.**

Objective: **To develop approaches that address prevalent needs of families across their program that may leverage community partnerships or other funding sources.**

Task To Be Accomplished	Person Responsible	Responsible To Monitor	Projected Date of Completion	Documents or Forms
The program will ensure that systems, supports and resources are in place to address professional development, continuous improvement, program environment and partnerships related to family well-being. The Program will incorporate goals related to family well-being into agency work plans and strategic planning. The Program will develop relationships with community members and community organizations that support families interests and needs. The Program will implement the PFCE Framework Self-Assessment, the Monitoring Protocol, the Family Engagement Survey (FES), the LAP-D, and the C.L.A.S.S. Assessment to identify and understand the effectiveness of family-staff relationships with respect to teaching and learning.	All Head Start Staff Teachers Center Managers Support Services Staff	Area Directors Family Services Director Area Directors Family Services Director Executive Team	Ongoing	Program Plans for all services Family Partnership Agreements Self-Assessment FES Surveys PFCE Framework

HIDALGO COUNTY HEAD START PROGRAM
FAMILY SERVICES DEPARTMENT PROGRAM PLAN
Subpart E- Family and Community Engagement Program Services
2017 – 2018

Performance Standard: 1302.50 (b) (1) Family Engagement Approach

Goal: **To recognize parents as their children's primary teachers and nurturers**
Objective: **To implement intentional strategies to engage parents in their children's learning and development.**

Task To Be Accomplished	Person Responsible	Responsible To Monitor	Projected Date of Completion	Documents or Forms
The Program will provide parents with ongoing training such as Exploring Parenting, monthly parent meetings, parent conferences, etc. that also fosters development of being life-long educators. The Program will incorporate goals related to families as life-long educators into agency work plans and strategic planning. The Program will collaborate with school systems to support and empower families in their continued role as their child's life-long educators. Include teacher/teacher's assistants in parenting education sessions so parents and teachers can share information about child learning and development, and program curriculum.	Teachers Center Managers Support Services Staff	Education Area Directors Family Services Director Executive Team	Daily Ongoing	Exploring Parenting Agenda Monthly Parent Committee Meetings/Reading Initiative Program Family Partnership Agreements PFCE Framework

HIDALGO COUNTY HEAD START PROGRAM
FAMILY SERVICES DEPARTMENT PROGRAM PLAN
Subpart E- Family and Community Engagement Program Services
2017 – 2018

Performance Standard: 1302.50 (b) (2) Family Engagement Approach
Goal: **To develop relationships with parents and structure services to encourage trust and respect**
Objective: **To identify and implement parent activities to focus on trust and respect.**

Task To Be Accomplished	Person Responsible	Responsible To Monitor	Projected Date of Completion	Documents or Forms
Opportunities for sharing information with parents to discuss needs will be provided throughout the year, such as... Family Partnership Agreement Meetings Parent Committee Meetings Parent Workshops Volunteer Training Parent Conference Exploring Parenting - Parent Curriculum Training Parent Fair The Family Partnership Agreement and other meetings with families will take place in the language of their choice. Special emphasis will be placed on respecting each family's diversity, and cultural and ethnic background.	Center Managers Support Services Staff	Education Area Directors Family Services Director Family Services Coordinators	Within 90 days of enrollment Follow-up Ongoing	Family Strengths and Needs Assessment Family Partnership Agreement

HIDALGO COUNTY HEAD START PROGRAM
FAMILY SERVICES DEPARTMENT PROGRAM PLAN
Subpart E- Family and Community Engagement Program Services
2017 – 2018

Performance Standard: 1302.50 (b) (3) Family Engagement Approach

Goal: **To collaborate with families using the family partnership process**
Objective: **To identify and assess family needs, interests, strengths, goals, services and resources that support family well-being.**

Task To Be Accomplished	Person Responsible	Person Responsible To Monitor	Projected Date of Completion	Documents or Forms
The Program will implement the Family Partnership Process, using the Family Engagement outcomes, to identify individual family strengths and needs. The Program will conduct periodic follow-ups on the goals and objectives of the Family Partnership Agreement to assist families in meeting their needs.	Support Services Staff	Family Services Director Family Services Coordinators	Ongoing	PFCE Framework Family Partnership Agreement Referrals

HIDALGO COUNTY HEAD START PROGRAM
FAMILY SERVICES DEPARTMENT PROGRAM PLAN
Subpart E- Family and Community Engagement Program Services
2017 – 2018

Performance Standard: 1302.50 (b) (4) Family Engagement Approach

Goal: **To enable parents the opportunities to participate in the program as employees or volunteers**
Objective: **To engage parents in volunteer activities, training opportunities, leadership roles etc, and facilitate employment process.**

Task To Be Accomplished	Person Responsible	Person Responsible To Monitor	Projected Date of Completion	Documents or Forms
The Program will assist parents to volunteer in Advisory Committees for all program departments comprised of parents and community members to assist in the development and review of the program. Parents will be provided access to job placement notices posted at all Head Start Centers. The interview and selection rating system specifically will provide additional points for prospective applicants if they are Head Start parents. Parents will be trained as volunteers during the Volunteer Training. Parents will be recruited to volunteer at the center, in different areas including the classroom, the office or as center committee officers.	Executive Director Department Directors Center Managers Support Services Staff	Department Directors Family Services Department	Ongoing	Program Plans Department Procedures Manual Advisory Committee Minute Report Interview Rating Form Volunteer Training Conference Program

HIDALGO COUNTY HEAD START PROGRAM
FAMILY SERVICES DEPARTMENT PROGRAM PLAN
Subpart E- Family and Community Engagement Program Services
2017 – 2018

Performance Standard: 1302.50 (b) (5) Family Engagement Approach

Goal: **To provide family engagement services which address language and security needs**
Objective: **To develop process to address individual family needs.**

Task To Be Accomplished	Person Responsible	Responsible To Monitor	Projected Date of Completion	Documents or Forms
The program will utilize the family's primary language and culture diversity to share information in a safe environment. All information will be distributed to parents is in the family's preferred language. Monthly parent meetings, workshops, and trainings will be conducted in family's preferred language, to include a sign-language interpreter if needed.	Center Managers Teachers Support Services Staff	Department Directors Family Services Staff	Ongoing	Parent Meeting Information Workshop/Training Sign-In PFCE Framework

HIDALGO COUNTY HEAD START PROGRAM
FAMILY SERVICES DEPARTMENT PROGRAM PLAN
Subpart E- Family and Community Engagement Program Services
2017 – 2018

Performance Standard: 1302.50 (b) (6)

Goal: **To implement procedures for teachers, home visitors, and family support staff to share information using a coordinated approach**

Objective: **To share information and plan engagement strategies collaboratively for parents.**

Task To Be Accomplished	Person Responsible	Responsible To Monitor	Projected Date of Completion	Documents or Forms
The Program staff will conduct staffings, parent/teacher conferences, home visits, and other parent interviews throughout the year to share information. The Program will share information with parents during home visits and when reviewing LAP-D assessments, and Deca Surveys as well as health and nutrition information.	Support Services Staff Teachers Center Managers Department Directors	Department Directors Family Services Coordinators Mental Health Counselor	August thru May	Staffing Documentation Parent/Teacher Conference Info PFCE Framework

HIDALGO COUNTY HEAD START PROGRAM
FAMILY SERVICES DEPARTMENT PROGRAM PLAN
Subpart E- Family and Community Engagement Program Services
2017 – 2018

Performance Standard: 1302.51 (a) Parent Activities to Promote Child Learning and Development

Goal: **To share responsibility with parents for their children's early learning and development goals and implement family engagement strategies to foster parental confidence and skills.**

Objective: **To develop activities to support child/parent relationship, attendance and bilingualism.**

Task To Be Accomplished	Person Responsible	Responsible To Monitor	Projected Date of Completion	Documents or Forms
The program will offer opportunities for parents to engage in their child's daily learning, acknowledging parents as lifelong educators. To include: Nutrition Contest Read Aloud Literacy Program Graduation Ceremonies Volunteering at Centers The program will develop strategies and activities in the classrooms for consistent attendance by providing incentives. Parents will participate as advocates and leaders for their children's attendance. The program will provide training and resources for parents about the benefits of bilingualism and biliteracy. Such as: Training Parents to Read Language of the Day Lending Library	Teachers Assistant Teachers Support Services Staff	Center Managers Support Services Staff Department Directors Family Services Coordinators	Ongoing	PFCE Framework Daily Attendance Reports Take-home Activities Family Services Readiness Goals Activities Exploring Parenting Curriculum

HIDALGO COUNTY HEAD START PROGRAM
FAMILY SERVICES DEPARTMENT PROGRAM PLAN
Subpart E-Family and Community Engagement Program Services
2017 – 2018

Performance Standard: 1302.52 (a) Family Partnership Services

Goal: **To implement a family partnership process for parent engagement**
Objective: **To provide activities which support family well-being, child learning and development, services for children with disabilities.**

Tasks To Be Accomplished	Person Responsible	Responsible To Monitor	Projected Date of Completion	Documents or Forms
The Program will implement a family partnership process as early in the program year as possible and continue for as long as the family participates in the program, based on parent interest and need, using the Family Engagement Outcomes. The Program will link families with support systems and resources and conduct intentional follow-up to determine their effectiveness. The Program will utilize curriculums to support child learning and development. Teacher/Parent interviews will be held to address children's individual needs. Such as: DECA Lap-D Frog Street Kinder Music Kindness Curriculum Positive Behavior Support Special Services Nine Weeks Progress Reports	Support Services Staff Teachers Center Managers	Center Managers Family Services Department Department Directors	August thru May	Family Partnership Agreement FPA Tracking Log PFCE Framework Referral form and Referral form Follow-ups Community Resource Directory Parent Fair Agenda Special Services Progress Reports Conference Notes

HIDALGO COUNTY HEAD START PROGRAM
FAMILY SERVICES DEPARTMENT PROGRAM PLAN
Subpart E-Family and Community Engagement Program Services
2017 – 2018

Performance Standard: 1302.52 (b) Identification of Family Strengths and Needs

Goal: **To identify family strengths and needs**

Objective: **To implement a process to assess strengths and needs that include: family well-being, positive parent-child relationships, families as lifelong educators, families as learners, family engagement in transitions, family connections to peers and community and families as advocates and leaders.**

Task To Be Accomplished	Person Responsible	Responsible To Monitor	Projected Date of Completion	Documents or Forms
The Program will implement the Family Partnership Agreement that offers parents opportunities to develop family goals and outline responsibilities, timetables and intentional strategies for the progress and achievement of these goals. The program will utilize a parenting program curriculum to support parenting strategies to address family needs. The program will conduct periodic follow-up to verify timely and effectiveness of services. The program will provide training for parents as advocates and leaders for their centers. • Volunteer Training • Leadership Conference • Governance Institute • Advisory Committees	Center Managers Support Services Staff	Executive Program Director Asst. Program Directors Department Directors	Ongoing	Family Partnership Agreement Referral forms and Follow-up forms HCHS Program Calendar Exploring Parenting

HIDALGO COUNTY HEAD START PROGRAM
FAMILY SERVICES DEPARTMENT PROGRAM PLAN
Subpart E-Family and Community Engagement Program Services
2017 – 2018

Performance Standard: 1302.52 (c) Individualized Family Partnership Services

Goal: **To individualize family partnership services**
Objective: **To address family interests and needs, achieve family engagement outcomes and jointly develop process to share and review individual goals.**

Task To Be Accomplished	Person Responsible	Responsible To Monitor	Projected Date of Completion	Documents or Forms
The Program's Family Partnership Agreement process will be initiated as early as possible after enrollment, taking into account the family's readiness and willingness to participate in the process. The Program's Family Partnership Agreement will offer parents opportunities to develop family goals and outline responsibilities, time tables, and strategies for the progress and achievement of these goals using the PFCE Framework. Emergency and/or crisis assistance will be made accessible & available to all families in need through referrals or other resources and services.	Center Managers Support Services Staff Teachers	Department Directors Executive Team	Upon entering employment status Ongoing	Confidentiality Policy Personnel File Preservice Training Staff Development Workshops Program Calendar PFCE Framework

HIDALGO COUNTY HEAD START PROGRAM
FAMILY SERVICES DEPARTMENT PROGRAM PLAN
Subpart E-Family and Community Engagement Program Services
2017 – 2018

Performance Standard: 1302.52 (d) Existing Plans and Community Resources

Goal: **To address any existing plans and available community resources to meet family needs.**
Objective: **To establish and implement a process to review existing plans and identify other community resources to avoid duplication of services.**

Task To Be Accomplished	Person Responsible	Responsible To Monitor	Projected Date of Completion	Documents or Forms
The Program will implement the Family Partnership Process and address any pre-existing family plans that have been developed between other programs. If such a plan exists, a request for the release of information form will be initiated, in order to avoid duplication and to coordinate, to the extent possible, with families and other agencies. Program staff will conduct an in-person interview and review information provided during the Family Partnership Process. If a family has an existing plan in place, program staff will collaborate and support family's needs and goals.	Support Services Staff Center Managers	Department Directors Family Services Coordinators	Within 90 days of enrollment Follow-up Ongoing	PFCE Framework Family Partnership Agreement FPA Follow-up Referral Information

HEALTH SERVICES PLAN

Hidalgo County Head Start Program
Health Services Program Plan
2017 – 2018

Performance Standard: 1302.40 (a) Purpose.

Goal: To provide high-quality health, oral health, mental health, and nutrition services that are developmentally, culturally and linguistically appropriate.

Objective: To support each child's growth and school readiness.

Task to be Accomplished	Person Responsible	Person Responsible for Monitoring	Projected Date of Completion	Documents or Forms
1. The program will refer the parent/guardian to local clinics and health professionals who provide services at reduced fees or who will accept Medicaid to provide comprehensive health services that include the following: Screens: Vision/Hearing/Strabismus ** Physical Examination: Head to toe assessment performed by U.S License Professional Vitals: Temperature, pulse, respirations, blood pressure, height, weight, BMI (body mass index) Immunizations: Up to Date (*To include Tuberculin Skin Test) Dental Exam: Periodic and comprehensive evaluation every six months.	Case Manager to include: Support Services Facilitators/ Support Services Assistants Center Managers	Center Managers Executive Team Nurse Health Services Director	As needed Screens within 45 days of enrollment Annual Exam or every twelve months Immunizations prior to first day of school	Physical Exam Screens Child Heath Summary Child Immunization Record
2. Health Services Advisory Committee (HSAC) along with staff will inform all health providers including managed care organizations about full scope of services provided to Head Start children. * Includes T.B. Skin Test With Date, Results And Signature. ** Certified Center staff will provide vision/hearing screens as needed	Case Manager to include: Support Services Facilitators/ Support Services Assistants Center Managers	Center Managers Executive Team Nurse Health Services Director	Annual	Provider Contracts

Hidalgo County Head Start Program
Health Services Program Plan
2017 – 2018

Performance Standard: 1302.40 (b) Purpose.

Goal: To establish and maintain a Health Services Advisory Committee.

Objective: To include Head Start parents, professionals, and other volunteers from the community into decision-making process.

Task to be Accomplished	Person Responsible	Person Responsible for Monitoring	Projected Date of Completion	Documents or Forms
1. Health Services Staff will maintain a relationship with members of the Health Services Advisory Committee.	Health Services Director Health Services Staff Health Services Advisory Committee Members	Health Services Staff Health Services Director	Ongoing	Health Services Procedures Manual
2. Health Services Staff will collaborate with Health Services Advisory Committee as needed.	Health Services Director Health Services Staff Health Services Advisory Committee Members	Health Services Staff Health Services Director	As needed Ongoing	Health Services Procedures Manual
3. Health Services Staff will communicate any changes to the Health Services Advisory Committee.	Health Services Director Health Services Staff Health Services Advisory Committee Members	Health Services Staff Health Services Director	As needed Ongoing	Health Services Procedures Manual
4. Health Services Staff will work together by supporting each other's goals.	Health Services Director Health Services Staff Health Services Advisory Committee Members	Health Services Staff Health Services Director	As needed Ongoing	Health Services Procedures Manual
5. Health Services Advisory Committee will meet at a minimum, once a year.	Health Services Director Health Services Staff Health Services Advisory Committee Members	Health Services Staff Health Services Director	As needed Ongoing Yearly	Health Services Procedures Manual Head Start Performance Standards

Hidalgo County Head Start Program
Health Services Program Plan
2017 – 2018

Performance Standard: 1302.41 (a) Collaboration and communication with parents.

Goal: To collaborate with parents as partners in all actions for the health and well-being of their children.

Objective: To collaborate with parents in linguistically appropriate manner and communicate with parents about their child's health needs and development concerns in a timely and effective manner.

Task to be Accomplished	Person Responsible	Person Responsible for Monitoring	Projected Date of Completion	Documents or Forms
1. The program will encourage the parent/guardian to participate in the daily health lessons.	Case Manager to include: Support Services Facilitators/ Support Services Assistants Center Managers	Center Managers Executive Team Nurse Health Services Director	At enrollment Parent Orientation Daily	Health Lesson Daily Schedule
2. The program will encourage the parent/guardian to accompany their child during the exams and screening procedure.	Case Manager to include: Support Services Facilitators/ Support Services Assistants Center Managers	Center Managers Executive Team Nurse Health Services Director	At enrollment Parent Orientation Daily	Health Lesson Daily Schedule
3. The program will encourage the parent/guardian to participate in all related health activities.	Case Manager to include: Support Services Facilitators/ Support Services Assistants Center Managers	Center Managers Executive Team Nurse Health Services Director	At enrollment Parent Orientation Daily	Health Lesson Daily Schedule
4. The program will explain and inform the parent/guardian the purpose of health procedures and exams the child will receive throughout the school year.	Case Manager to include: Support Services Facilitators/ Support Services Assistants Center Managers	Center Managers Executive Team Nurse Health Services Director	At enrollment Parent Orientation Daily	Health Lesson Daily Schedule

Hidalgo County Head Start Program
Health Services Program Plan
2017 – 2018

Performance Standard: 1302.41 (b) (1) Collaboration and communication with parents.

Goal: To obtain advance authorization from the parent or legal guardian for all health and developmental procedures administered through the program.

Objective: To encourage parent or legal guardian to allow the program to provide health services for their child.

Task to be Accomplished	Person Responsible	Person Responsible for Monitoring	Projected Date of Completion	Documents or Forms
1. The program will obtain consent from the parent/guardian prior to exams and screening procedures. At this time all screens, exams and immunizations needed for their child will be explained to the parent/guardian.	Case Manager to include: Support Services Facilitators/ Support Services Assistants Center Managers	Center Managers Executive Team Nurse Health Services Director	At enrollment As needed	Consent for Screens Referrals Standard Non-Standard Results Action Plan for Asthma or Seizure
2. A copy of all results will be given and explained to the parent/guardian.	Case Manager to include: Support Services Facilitators/ Support Services Assistants Center Managers	Center Managers Executive Team Nurse Health Services Director	At enrollment As needed	Consent for Screens Referrals Standard Non-Standard Results Action Plan for Asthma or Seizure
3. The program will acquire documentation when the parent/guardian refuses authorization for services.	Case Manager to include: Support Services Facilitators/ Support Services Assistants Center Managers	Center Managers Executive Team Nurse Health Services Director	At enrollment As needed	Refusal of Medical Services and Dental Services Family Contact Notes
4. The program will explain to the parent/guardian the importance of the health services and the consequences of refusal.	Case Manager to include: Support Services Facilitators/ Support Services Assistants Center Managers	Center Managers Executive Team Nurse Health Services Director	At enrollment As needed	Refusal of Medical Services and Dental Services Family Contact Notes

Hidalgo County Head Start Program
Health Services Program Plan
2017 – 2018

Performance Standard: 1302.41 (b) (2) Collaboration and communication with parents.

Goal: To share with parents the policies for health emergencies.

Objective: To notify to parent/guardian all emergencies involving their child.

Task to be Accomplished	Person Responsible	Person Responsible for Monitoring	Projected Date of Completion	Documents or Forms
1. In case of an emergency involving a Head Start child, the program will notify the parent/guardian immediately. If the parent/guardian is unavailable, the staff will notify the emergency contact. A notice of illness or injury will be sent home with the child. Documentation will also be written in the family contact notes and an incident report will be sent to administration. • Medical Emergency Procedures will be followed and reviewed/updated by the Health Advisory Committee on a yearly basis. • Staff trained in First Aid/CPR will administer First Aid/CPR as necessary. • Staff will seek medical assistance from 911 and preferred physician listen on child's emergency form. • Staff will notify Health Services Director within 24 hours of an emergency. • Health Services Director and nurses will be called for guidance as necessary.	Case Manager to include: Support Services Facilitators/ Support Services Assistants Center Managers	Center Managers Executive Team Nurse Health Services Director	Ongoing As needed	Notice of Injury/ Illness Family Contact Notes Accident/Incident Report

Hidalgo County Head Start Program
Health Services Program Plan
2017 – 2018

Performance Standard: 1302.42 (a) Child health status and care.

Goal: To consult with parents and determine whether each child has continuous and accessible health care within 30 days after the child first attends.

Objective: To determine a child's source of healthcare.

Task to be Accomplished	Person Responsible	Person Responsible for Monitoring	Projected Date of Completion	Documents or Forms
1. The program will ask parent/legal guardian which medical insurance child has. If child has no insurance the program will assist families in accessing a source of care and health insurance.	Case Manager to include: Support Services Facilitators/ Support Services Assistants Center Managers	Center Managers Executive Team Nurse Health Services Director	Within 30 Days of Enrollment & Ongoing	Medical Insurance Form Community Health Directory
2. The program will inform parent/guardian at monthly meetings about availability of health resources.	Case Manager to include: Support Services Facilitators/ Support Services Assistants Center Managers	Center Managers Executive Team Nurse Health Services Director	Monthly	Community Health Directory
3. The program will initiate the referrals for health services for children/families when needed.	Case Manager to include: Support Services Facilitators/ Support Services Assistants Center Managers	Center Managers Executive Team Nurse Health Services Director	Ongoing, as Needed	Referrals
4. The program will empower parent/guardian to follow-up on referrals made for health services.	Case Manager to include: Support Services Facilitators/ Support Services Assistants Center Managers	Center Managers Executive Team Nurse Health Services Director	Ongoing, as Needed	Referrals

Hidalgo County Head Start Program
Health Services Program Plan
2017 – 2018

Performance Standard: 1302.42 (b) (1) Child health status and care.

Goal: To ensure up-to-date health status.

Objective: To obtain determinations from health care and oral health care professionals as to whether or not the child is up-to-date on a schedule of age appropriate preventive and primary medical and oral health care.

Task to be Accomplished	Person Responsible	Person Responsible for Monitoring	Projected Date of Completion	Documents or Forms
1. The program will collaborate with the parent/guardian to secure information from the primary health care provider regarding the health status (immunization record, current treatments, etc.) of the child. • Collaboration with parents will be done by meetings, telephone conferences, home visits and health notices as needed.	Case Manager to include: Support Services Facilitators/ Support Services Assistants Center Manager	Center Managers Executive Team Nurse Health Services Director	Prior to first day of school Annually	Physical Exam Dental Exam Immunization Record Vision/Hearing Screen Imm-trac Registry
2. The program will assist parents to follow the requirements of child wellness used by the Early and Periodic Screening Diagnosis and Treatment (EPSDT) program of the Medicaid agency in Texas.	Case Manager to include: Support Services Facilitators/ Support Services Assistants Center Manager	Center Managers Executive Team Nurse Health Services Director	Prior to first day of school Annually	Physical Exam Dental Exam Immunization Record Vision/Hearing Screen Imm-trac Registry
3. The program will assist parents to follow the immunizations issued by the Centers for Disease Control and Prevention and the recommendations of the Health Services Advisory Committee (HSAC) or community health providers.	Case Manager to include: Support Services Facilitators/ Support Services Assistants Center Manager	Center Managers Executive Team Nurse Health Services Director	Prior to first day of school Annually	Physical Exam Dental Exam Immunization Record Vision/Hearing Screen Imm-trac Registry

Hidalgo County Head Start Program
Health Services Program Plan
2017 – 2018

Performance Standard: 1302.42 (b) (2) Child health status and care.

Goal: To obtain or perform evidence-based vision and hearing screenings.

Objective: To obtain or perform vision and hearing screenings within 45 days after the child first attends the program.

Task to be Accomplished	Person Responsible	Person Responsible for Monitoring	Projected Date of Completion	Documents or Forms
1. Staff certified by The Texas Department of State Health Services will provide vision and hearing screens within 45 calendar days after the child fist attends the program and as needed.	Case Manager to include: Support Services Facilitators/ Support Services Assistants Center Manager Nurse	Center Managers Executive Team Nurse Health Services Director	Prior to first day of school Within 45 days after the child first attends the program Annually	Physical Exam Form Record Vision/Hearing Screen

Hidalgo County Head Start Program
Health Services Program Plan
2017 – 2018

Performance Standard: 1302.42 (b) (4) Child health status and care.

Goal: To identify each child's nutritional health needs.

Objective: To coordinate and assess any nutritional needs from health records.

Task to be Accomplished	Person Responsible	Person Responsible for Monitoring	Projected Date of Completion	Documents or Forms
1. The program will identify any special dietary requirements or food allergies and address them accordingly. Food allergies will require an anaphylaxis plan and a special menu signed by a U.S. board-certified physician. • Health Services will collaborate with Child Nutrition to ensure all plans and special menus are in place.	Case Manager to include: Support Services Facilitators/ Support Services Assistants Center Manager Nurse	Center Managers Executive Team Nurse Health Services Director	Prior to first day of school As needed Annually	Physical Exam

Hidalgo County Head Start Program
Health Services Program Plan
2017 – 2018

Performance Standard: 1302.42 (c) Child health status and care.

Goal: To ensure every child has ongoing care.

Objective: To help parents continue to follow recommended schedules of well-child and oral health care by implementing periodic observations to identify any new or recurring developmental, medical, oral or mental health concerns.

Task to be Accomplished	Person Responsible	Person Responsible for Monitoring	Projected Date of Completion	Documents or Forms
1. The program will monitor the children's health records on a regular basis to ensure that they are in compliance with their recommended schedule of well child care. If they lack in their schedule measures will be taken to update them.	Case Manager to include: Support Services Facilitators/ Support Services Assistants Center Managers	Center Managers Executive Team Nurse Health Services Director	At enrollment Monthly As needed	Appointment Letters Parent Notices Referrals Promis Tracking
2. The program will discuss with the parents the importance of prevention and well child care via letters, parent conference, appointments, monthly parent meetings, etc.	Case Manager to include: Support Services Facilitators/ Support Services Assistants Center Managers	Center Managers Executive Team Nurse Health Services Director	At enrollment Monthly As needed	Appointment Letters Parent Notices Referrals Promis Tracking
3. The program will educate the parent/guardian on Medicaid services and how to advocate for the delivery of quality health services by asking the parent to attend health appointments with child and ask questions on services.	Case Manager to include: Support Services Facilitators/ Support Services Assistants Center Managers	Center Managers Executive Team Nurse Health Services Director	At enrollment Monthly As needed	Appointment Letters Parent Notices Referrals Promis Tracking

Hidalgo County Head Start Program
Health Services Program Plan
2017 – 2018

Performance Standard: 1302.42 (d) Child health status and care.

Goal: To ensure every child has extended follow-up care.

Objective: To facilitate further diagnostic testing, evaluation, treatment, and follow-up plan by a licensed or certified professional for each child with a health problem or developmental delay by tracking referrals and monitoring follow-up plans.

Task to be Accomplished	Person Responsible	Person Responsible for Monitoring	Projected Date of Completion	Documents or Forms
1. The program will inform the parent/guardian of health concerns and/ or referrals made by Head Start provider during physical and/ or dental exam.	Support Services Facilitators/ Support Services Assistants Center Managers	Center Managers Executive Team Nurse Health Services Director	As needed	Physical Exam Dental Exam Screen results Family Contact Notes Action plan for Asthma or seizure
2. The parent/guardian will inform the staff of any health concerns expressed during the exam done by their primary physician.	Support Services Facilitators/ Support Services Assistants Center Managers	Center Managers Executive Team Nurse Health Services Director	As needed	Physical Exam Dental Exam Screen results Family Contact Notes Action plan for Asthma or seizure
3. The program will refer and follow-up on any abnormal conditions or suspected health problems. The referral will be initiated immediately and the follow-up within 30 days of referral date.	Support Services Facilitators/ Support Services Assistants Center Managers	Center Managers Executive Team Nurse Health Services Director	As needed	Physical Exam Dental Exam Screen results Family Contact Notes Action plan for Asthma or seizure
4. Staff/Nurses will develop and implement an (IHP) Individualized Health Plan for those children with identified health needs.	Support Services Facilitators/ Support Services Assistants Center Managers	Center Managers Executive Team Nurse Health Services Director	As needed	Physical Exam Dental Exam Screen results Family Contact Notes Action plan for Asthma or seizure

Hidalgo County Head Start Program
Health Services Program Plan
2017 – 2018

Performance Standard: 1302.42 (e) Child health status and care.

Goal: To use program funds for professional medical and oral health services when no other source of funding is available.

Objective: To arrange for the use of program funds if needed and provide written documentation of the efforts to access other available sources of funding.

Task to be Accomplished	Person Responsible	Person Responsible for Monitoring	Projected Date of Completion	Documents or Forms
1. The program will refer non-Medicaid parents/guardians to community health resources for assistance.	Case Manager to include: Support Services Facilitators/ Support Services Assistants Center Managers	Center Managers Executive Team Nurse Health Services Director	As needed At enrollment	Denial Letter Approval for payment Family Contact Notes
2. Hidalgo County Head Start Program will require a denial letter for assistance from the community resource. For example, a Medicaid letter stating reason for denial of services before agreeing to pay.	Case Manager to include: Support Services Facilitators/ Support Services Assistants Center Managers	Center Managers Executive Team Nurse Health Services Director	As needed At enrollment	Denial Letter Approval for payment Family Contact Notes
3. The parent/guardian will be instructed if no insurance is available that they must then apply for public assistance prior to Hidalgo County Head Start disbursing payment.	Case Manager to include: Support Services Facilitators/ Support Services Assistants Center Managers	Center Managers Executive Team Nurse Health Services Director	As needed At enrollment	Denial Letter Approval for payment Family Contact Notes

Hidalgo County Head Start Program
Health Services Program Plan
2017 – 2018

Performance Standard: 1302.43 Oral health practices.

Goal: To promote effective oral health hygiene.

Objective: To ensure all children with teeth are assisted by appropriate staff or volunteers in brushing their teeth with toothpaste containing fluoride once daily.

Task to be Accomplished	Person Responsible	Person Responsible for Monitoring	Projected Date of Completion	Documents or Forms
1. Children will brush teeth after breakfast by wetting toothbrush and rinsing with water. After lunch children will brush their teeth using fluoride toothpaste.	Case Manager to include: Support Services Facilitators/ Support Services Assistants Center Managers Teachers Assistant Teachers	Center Managers Executive Team Nurse Health Services Director	Daily Ongoing	Consents Form for use of Toothpaste Daily Health Checks
2. The dental curriculum will reinforce the importance of brushing their teeth after meals.	Case Manager to include: Support Services Facilitators/ Support Services Assistants Center Managers Teachers Assistant Teachers	Center Managers Executive Team Nurse Health Services Director	Daily Ongoing	Consents Form for use of Toothpaste Daily Health Checks
3. The parent/guardian will be provided with information on dental care at monthly meetings.	Case Manager to include: Support Services Facilitators/ Support Services Assistants Center Managers Teachers Assistant Teachers	Center Managers Executive Team Nurse Health Services Director	Daily Ongoing	Consents Form for use of Toothpaste Daily Health Checks
4. The parent/guardian will sign consent for daily tooth brushing.	Case Manager to include: Support Services Facilitators/ Support Services Assistants Center Managers Teachers Assistant Teachers	Center Managers Executive Team Nurse Health Services Director	Daily Ongoing	Consents Form for use of Toothpaste Daily Health Checks

Hidalgo County Head Start Program
Health Services Program Plan
2017 – 2018

Performance Standard: 1302.46 Family support services for health, nutrition, and mental health.

Goal: To collaborate with parents to promote children's health and well-being.

Objective: Will provide medical, oral, nutrition and mental health education support services that are understandable to individuals.
Will provide opportunities for parents to learn about preventive medical and oral health care, emergency first aid, environmental hazards, and health and safety practices.
Will assist parents' navigation through health systems to meet the general health and specifically identified needs of their children.

Task to be Accomplished	Person Responsible	Person Responsible for Monitoring	Projected Date of Completion	Documents or Forms
1. The program will review health records on a regular basis to ensure medical and dental concerns be completed and addressed in a timely manner. 2. The program will encourage the parent/guardian to become active partners thru the following: • Promote preventive health care via newsletter, conferences and workshops. • Introduce the parent/guardian to community health resources and assist them in becoming clients. • Encourage the parent/guardian by empowering them to take their child for medical and dental appointments. • Encourage and remind the parent/guardian to keep a copy of all health records in a safe place for transitional purposes. • Encourage the parent/guardian to participate on the Health Services Advisory Committee.	Case Manager to include: Support Services Facilitators/ Support Services Assistants Center Managers Case Manager to include: Support Services Facilitators/ Support Services Assistants Center Managers	Center Managers Executive Team Nurse Health Services Director Center Managers Executive Team Nurse Health Services Director	Monthly As needed Parent Orientation Monthly As needed Parent Orientation	Family Contact Notes Referral Follow up Parent Conference Family Contact Notes Referral Follow up Parent Conference

Hidalgo County Head Start Program
Health Services Program Plan
2017 – 2018

Performance Standard: 1302.47 (b) (1) (vi) Safety practices.

Goal: To establish, train staff on, implement, and enforce a system of health and safety practices to ensure children kept safe at all times.

Objective: To ensure facilities where children are served are equipped with safety supplies that are readily accessible to staff.

Task to be Accomplished	Person Responsible	Person Responsible for Monitoring	Projected Date of Completion	Documents or Forms
1. The program will make sure that a well-stocked first-aid kit is available at all times.	Case Manager to include: Support Services Facilitators/ Support Services Assistants Center Managers	Center Managers Executive Team Nurse Health Services Director	August thru May	First-Aid Monitor Check
2. The program will carry a first-aid kit any time the children and staff are away from the center.	Case Manager to include: Support Services Facilitators/ Support Services Assistants Center Managers	Center Managers Executive Team Nurse Health Services Director	August thru May	First-Aid Monitor Check
3. The program will stock and monitor the inventory of first-aid supplies on a regular basis.	Case Manager to include: Support Services Facilitators/ Support Services Assistants Center Managers	Center Managers Executive Team Nurse Health Services Director	August thru May	First-Aid Monitor Check

Performance Standard: 1302.47 (b) (4) (i) (c) Safety practices.

Goal: To provide all staff with regular child contact with initial orientation training and ongoing training in health, safety and child care requirements.

Objective: To ensure the safety of children by proving staff with training in administration of medication.

Task to be Accomplished	Person Responsible	Person Responsible for Monitoring	Projected Date of Completion	Documents or Forms
1. The program will administer, handle and store all medication in accordance with the programs policy and procedures.	Case Manager to include: Support Services Facilitators/ Support Services Assistants Center Managers	Center Managers Executive Team Nurse Health Services Director	As needed	Consent for Administration of Medication Observation Notes Procedures Manual Technical / Training Form Delegation of Tasks Action Plan for Asthma or Seizure

Hidalgo County Head Start Program
Health Services Program Plan
2017 – 2018

Performance Standard: 1302.47 (b) (5) Safety practices.

Goal: To provide all staff with regular child contact with initial orientation training and ongoing training in health, safety and child care requirements.

Objective: To ensure all staff and consultants follow appropriate practices to keep children safe during all activities.

Task to be Accomplished	Person Responsible	Person Responsible for Monitoring	Projected Date of Completion	Documents or Forms
1. Staff, parent/guardian and volunteers will have ongoing training on safety practice for both home and program settings. This training will be provided by community agencies.	Case Manager to include: Support Services Facilitators/ Support Services Assistants Center Managers	Center Managers Executive Team Nurse Health Services Director	August thru May	Technical Training Sign Newsletter Lesson Plan Emergency Policies Classroom Safety
2. Children will be involved in practicing safety practices through daily lessons, classroom activities, field trips and etc.	Case Manager to include: Support Services Facilitators/ Support Services Assistants Center Managers	Center Managers Executive Team Nurse Health Services Director	August thru May	Technical Training Sign Newsletter Lesson Plan Emergency Policies Classroom Safety

Hidalgo County Head Start Program
Health Services Program Plan
2017 – 2018

Performance Standard: 1302.47 (b) (5) (i) Safety practices.

Goal: To provide all staff with regular child contact with initial orientation training and ongoing training in health, safety and child care requirements.

Objective: To report suspected or known child abuse and neglect.

Task to be Accomplished	Person Responsible	Person Responsible for Monitoring	Projected Date of Completion	Documents or Forms
1. Staff will report all suspected causes of abuse and neglect to the appropriate agency immediately.	Case Manager to include: Support Services Facilitators/ Support Services Assistants Center Managers	Center Managers Executive Team Mental Health Coordinator Nurse Health Services Director	As needed	Suspected Abuse and Neglect Form
2. Staff will fill out the suspected abuse and neglect form and write a summary of what occurred.	Case Manager to include: Support Services Facilitators/ Support Services Assistants Center Managers	Center Managers Executive Team Nurse Health Services Director	As needed	Suspected Abuse and Neglect Form
3. All information will be kept **strictly** confidential and under lock and key.	Case Manager to include: Support Services Facilitators/ Support Services Assistants Center Managers	Center Managers Executive Team Nurse Health Services Director	As needed	Suspected Abuse and Neglect Form
4. Staff will receive annual training from local agencies and the health department on reporting suspected abuse and neglect.	Case Manager to include: Support Services Facilitators/ Support Services Assistants Center Managers	Center Managers Executive Team Nurse Health Services Director	As needed	Suspected Abuse and Neglect Form

Hidalgo County Head Start Program
Health Services Program Plan
2017 – 2018

Performance Standard: 1302.47 (b) (6) (i) Safety practices.

Goal: To ensure all staff systematically and routinely implement hygiene practices.

Objective: To ensure exposure to blood and body fluids are handles consistent with standards of Occupational Safety Health Administration.

Task to be Accomplished	Person Responsible	Person Responsible for Monitoring	Projected Date of Completion	Documents or Forms
1. Staff and volunteers will read sign and abide by the Sanitation and Infection Control Policy. This form will be filed in the employee's record or volunteer folder.	Case Manager to include: Support Services Facilitators/ Support Services Assistants Center Managers	Center Managers Executive Team Nurse Health Services Director	August thru May	Sanitation and Control Policy
2. Staff will ensure that a copy of the Sanitation and Infection Control Policy is posted on the Health Bulletin Board located in every classroom.	Case Manager to include: Support Services Facilitators/ Support Services Assistants Center Managers	Center Managers Executive Team Nurse Health Services Director	August thru May	Sanitation and Control Policy
3. Staff will have ongoing training on Universal Precautions.	Case Manager to include: Support Services Facilitators/ Support Services Assistants Center Managers	Center Managers Executive Team Nurse Health Services Director	August thru May	Sanitation and Control Policy

Hidalgo County Head Start Program
Health Services Program Plan
2017 – 2018

Performance Standard: 1302.47 (b) (6) (i) Safety practices.

Goal: To ensure all staff systematically and routinely implement hygiene practices.

Objective: To ensure appropriate toileting, hand washing, and diapering procedures are followed.

Task to be Accomplished	Person Responsible	Person Responsible for Monitoring	Projected Date of Completion	Documents or Forms
1. Staff will do the following when diapering: • Ensure child's safety at all times. • Change diaper on an elevated, non-porous surface used only for changing diapers. • Talk to infant/toddler/child while diapering. • Note anything unusual in the child's diaper. • Change diapers at regular intervals and/or as needed. • Always use Universal Precautions.	Case Manager to include: Support Services Facilitators/ Support Services Assistants Center Managers	Center Managers Executive Team Nurse Health Services Director	As Needed	Diapering Policy

Hidalgo County Head Start Program
Health Services Program Plan
2017 – 2018

Performance Standard: 1302.47 (b) (6) (iii) Safety practices.

Goal: To ensure all staff systematically and routinely implement hygiene practices.

Objective: To ensure exposure to blood and body fluids are handled consistent with standards of the Occupational Safety Health Administration.

Task to be Accomplished	Person Responsible	Person Responsible for Monitoring	Projected Date of Completion	Documents or Forms
1. Gloves are made available to all staff and will be worn in contact with spills of blood or other visible bodily fluids. • Centers are provided Bio-Hazard kits for proper clean-up of such incidents.	Case Manager to include: Support Services Facilitators/ Support Services Assistants Center Managers	Center Managers Executive Team Nurse Health Services Director	August thru May As needed	Sanitation and Infection Control Policy
2. Spills or bodily fluids will be cleaned and disinfected immediately as per professionally established guidelines (Standards of Occupational Safety Health Administration). Any tools used to clean such spills will also be cleaned and disinfected immediately. Other blood contaminated materials will be disposed of in a plastic bag with a secure tie.	Case Manager to include: Support Services Facilitators/ Support Services Assistants Center Managers	Center Managers Executive Team Nurse Health Services Director	August thru May As needed	Sanitation and Infection Control Policy
3. Hands will be washed after every given use.	Case Manager to include: Support Services Facilitators/ Support Services Assistants Center Managers	Center Managers Executive Team Nurse Health Services Director	August thru May As needed	Sanitation and Infection Control Policy

Hidalgo County Head Start Program
Health Services Program Plan
2017 – 2018

Performance Standard: 1302.47 (b) (7) (i) Safety practices.

Goal: To ensure the program establishes, follows, and practices administrative safety procedures.

Objective: To be knowledgeable and aware of health measures, emergency measures and safety practices through training provided by the health staff.

Task to be Accomplished	Person Responsible	Person Responsible for Monitoring	Projected Date of Completion	Documents or Forms
1. The program will post policies and plans of action for emergencies that require rapid response on part of the staff (e.g., a child choking) or immediate medical and/or dental attention. This information will be posted on the health bulletin boards located in every classroom at all centers. This is to include the parent/guardian's room, literacy room and administration sites.	Case Manager to include: Support Services Facilitators/ Support Services Assistants Center Managers	Center Managers Executive Team Nurse Health Services Director	Prior to enrollment Daily	Health Safety Procedures How to handle medical/dental emergency Action Plan for Asthma or Seizure
2. The Health Advisory Committee will help establish emergency policy and procedures by revising "Health Emergency Bulletin" annually.	Case Manager to include: Support Services Facilitators/ Support Services Assistants Center Managers	Center Managers Executive Team Nurse Health Services Director	Prior to enrollment Daily	Health Safety Procedures How to handle medical/dental emergency Action Plan for Asthma or Seizure
3. Emergency policies and procedures are posted in both Spanish and English.	Case Manager to include: Support Services Facilitators/ Support Services Assistants Center Managers	Center Managers Executive Team Nurse Health Services Director	Prior to enrollment Daily	Health Safety Procedures How to handle medical/dental emergency Action Plan for Asthma or Anaphylaxis Seizure

Hidalgo County Head Start Program
Health Services Program Plan
2017 – 2018

Performance Standard: 1302.47 (b) (7) (i) & (vi) Safety practices.

Goal: To ensure the program establishes, follows, and practices administrative safety procedures.

Objective: To provide staff with polices and plans of action for emergency care.

Task to be Accomplished	Person Responsible	Person Responsible for Monitoring	Projected Date of Completion	Documents or Forms
1. Staff will post policies and plans of action for emergencies that require rapid response on part of the staff (e.g., a child choking) or immediate medical and/or dental attention. This information will be posted on the health bulletin boards located in every classroom at all centers. This is to include the parent/guardian's room, literacy room and administration sites.	Case Manager to include: Support Services Facilitators/ Support Services Assistants Center Managers	Center Managers Executive Team Nurse Health Services Director	Prior to enrollment Daily	Health Safety Procedures
2. The Health Services Advisory Committee will help establish emergency policy and procedures by revising all health emergency procedures annually.	Case Manager to include: Support Services Facilitators/ Support Services Assistants Center Managers	Center Managers Executive Team Nurse Health Services Director	Prior to enrollment Daily	Health Safety Procedures
3. Emergency policies and procedures are posted in both Spanish and English.	Case Manager to include: Support Services Facilitators/ Support Services Assistants Center Managers	Center Managers Executive Team Nurse Health Services Director	Prior to enrollment Daily	Health Safety Procedures

Hidalgo County Head Start Program
Health Services Program Plan
2017 – 2018

Performance Standard: 1302.47 (b) (7) (iii) Safety practices.

Goal: To ensure the program establishes, follows, and practices administrative safety procedures.

Objective: To protect children and staff from contagious diseases and from infectious disease outbreak.

Task to be Accomplished	Person Responsible	Person Responsible for Monitoring	Projected Date of Completion	Documents or Forms
1. When the parent/guardian presents a child at the center with an acute or short-term contagious illness the parent/guardian will be notified that the child cannot stay. The staff will refer to the communicable disease chart and minimum standards for assistance.	Case Manager to include: Support Services Facilitators/ Support Services Assistants Center Managers	Center Managers Executive Team Nurse Health Services Director	As needed	Exclusion Guidelines for a Sick Child
2. If the child has a short term injury that prohibits him/her from participating in the center based activities or group experiences the staff will ask the parent/guardian for a doctor's order stating the child may or may not participate. If the child cannot participate the parent/guardian will be notified that the center cannot accommodate the child while injured. All measures should be taken to accommodate the child at home.	Case Manager to include: Support Services Facilitators/ Support Services Assistants Center Managers	Center Managers Executive Team Nurse Health Services Director	As needed	Exclusion Guidelines for a Sick Child
3. Staff will explain to the parent/guardian the significant health and safety risks of the child or anyone in contact with the child if allowed to stay at the center.	Case Manager to include: Support Services Facilitators/ Support Services Assistants Center Managers	Center Managers Executive Team Nurse Health Services Director	As needed	Exclusion Guidelines for a Sick Child

Hidalgo County Head Start Program
Health Services Program Plan
2017 – 2018

Performance Standard: 1302.47 (b) (8) Safety practices.

Goal: To ensure a disaster preparedness plan is in place.

Objective: To ensure the program has all-hazards emergency management/disaster preparedness and response plans.

Task to be Accomplished	Person Responsible	Person Responsible for Monitoring	Projected Date of Completion	Documents or Forms
1. Staff will post all emergency response systems as part of the health bulletin board.	Case Manager to include: Support Services Facilitators/ Support Services Assistants Center Managers	Center Managers Executive Team Nurse Health Services Director	As needed At enrollment Ongoing	Emergency Plan II Consent For Emergency Transportation Emergency Contact
2. The parent/guardian will sign consents for emergency treatment, dental treatment and transportation. This will be located in each child's folder.	Case Manager to include: Support Services Facilitators/ Support Services Assistants Center Managers	Center Managers Executive Team Nurse Health Services Director	As needed At enrollment Ongoing	Emergency Plan II Consent For Emergency Transportation Emergency Contact
3. Staff will have emergency contacts for each child, which are to include the parent/guardian's physical address, home and/or work telephone number, physician name and telephone number in every classroom and at all telephone stations. (Emergency Plan II)	Case Manager to include: Support Services Facilitators/ Support Services Assistants Center Managers	Center Managers Executive Team Nurse Health Services Director	As needed At enrollment Ongoing	Emergency Plan II Consent For Emergency Transportation Emergency Contact
4. All consent forms for emergency treatment will accompany the child to every fieldtrip and/or outdoor activity.	Case Manager to include: Support Services Facilitators/ Support Services Assistants Center Managers	Center Managers Executive Team Nurse Health Services Director	As needed At enrollment Ongoing	Emergency Plan II Consent For Emergency Transportation Emergency Contact

HUMAN RESOURCES PLAN

Hidalgo County Head Start Program

Human Resources Department Program Plan

2017-2018

Performance Standard: 1302.90 (a) Personnel Policies

Goal: The HIDALGO COUNTY HEAD START PROGRAM will confirm the Program management functions are formally assigned to and adopted by staff within the program.

Objective: (a) To establish written personnel policies and procedures that is approved by the governing body and policy council and is available to all staff.

Task to be Accomplished	Person Responsible	Person Responsible for Monitoring	Projected Date of Completion	Documents or Forms
• The Program will maintain the lines of communication with Policy Council and key management to be clear and well established in assisting such with their responsibilities in developing, reviewing, and approving or disapproving policies dealing with the following: all funding applications and amendments; shared decision making; selection and enrollment priorities; personnel policies and changes related to; hiring and terminating the Head Start Director and Program staff. This will be accomplished by providing Program trainings and opportunities to attend Local, State, Regional and National Head Start conferences.	Executive Director	Executive Director	August 1, 2017	Program By laws Training Agendas Governance Leadership Institute Conference Binder
• The Program will confirm that the Policy Council serves as a link between parent committees and Grantee Board, public/private organizations and committees they serve.	Executive Director	Executive Director	August 1, 2017	Policy Council Meeting Minutes

Hidalgo County Head Start Program

Human Resources Department Program Plan

2017-2018

Performance Standard: 1302.90 Personnel Policies

Goal: The HIDALGO COUNTY HEAD START PROGRAM will confirm the Program management functions are formally assigned to and adopted by staff within the program.

Objective: (a) To establish written personnel policies and procedures that is approved by the governing body and policy council and is available to all staff.

Task to be Accomplished	Person Responsible	Person Responsible for Monitoring	Projected Date of Completion	Documents or Forms
• An Organizational Chart will reflect organization structure and define line and staff relationships.	Executive Director Assistant Program Directors	Executive Director Assistant Program Directors	As deemed necessary	Organizational Chart
• Development and revisions of the Organizational Chart will be reviewed and approved by the Policy Council and Grantee Board (Commissioners Court)..	Executive Director	Executive Director Assistant Program Directors	As deemed necessary	Organizational Chart
• The Organizational Chart will illustrate staff positions and proper chain of command.	Executive Director	Executive Director Assistant Program Directors	As deemed necessary	Organizational Chart
• A job description that will be developed and maintained for all staff positions.	Executive Director	Administrator for Human Resources	As deemed necessary	Organizational Chart

Hidalgo County Head Start Program

Human Resources Department Program Plan

2017-2018

Performance Standard: 1302.90 (b (1) (i) (ii)) Personnel Policies

Goal: The HIDALGO COUNTY HEAD START PROGRAM will confirm the Program management functions are formally assigned to and adopted by staff within the program.

Objective: (b)(1)(i)9ii) The program must establish procedures for background check for employees, volunteers, School district partnership staff consultants or contractors.

Task to be Accomplished	Person Responsible	Person Responsible for Monitoring	Projected Date of Completion	Documents or Forms
Before a person is hired, directly or through contract, the program staff will conduct an interview, verify references, conduct a sex offender registry check and obtain one of the following: (i) State criminal history records, including Fingerprint checks; or, (ii) Federal Bureau of Investigation criminal history records, including fingerprint checks.	Executive Director	Administrator for Human Resources Administrative Assistant for Human Resources	Prior to Employment	Applications Request for Background Checks CCL Abuse & Neglect Background Check DPS Criminal History FBI Fingerprint Background Check *Sex Offender Tracking Background Check

Hidalgo County Head Start Program

Human Resources Department Program Plan

2017-2018

Performance Standard: 1302.90 (2)(i)(ii) Personnel Policies

Goal: The HIDALGO COUNTY HEAD START PROGRAM will confirm the Program management functions are formally assigned to and adopted by staff within the program.

Objective: (2)(i)(ii) The program must establish procedures for background check for employees, volunteers, School district partnership staff consultants or contractors.

Task to be Accomplished	Person Responsible	Person Responsible for Monitoring	Projected Date of Completion	Documents or Forms
Human Resources(HR) staff will complete the background check process for each applicant to be hired by obtaining: (i) Whichever check listed in paragraph (b)(1) of this subsection was obtained prior to the date of hire; and, a. Conduct an Interview b. Reference Verification* c. Conduct a Sex Offender Registry Check* d. FBI Criminal History Check e. DPS Name Based Criminal History Check (ii) Child abuse and neglect state registry check. .	Executive Director	Administrator for Human Resources	Prior to Employment	Applications Request for Background Checks CCL Abuse & Neglect Background Check DPS Criminal History FBI Fingerprint Background Check *Sex Offender Tracking Background Check

Hidalgo County Head Start Program

Human Resources Department Program Plan

2017-2018

Performance Standard: 1302.90 (b)(3)(4) Personnel Policies

Goal: The HIDALGO COUNTY HEAD START PROGRAM will confirm the Program management functions are formally assigned to and adopted by staff within the program.

Objective: (3)(4)The program must establish procedures for background check for employees, volunteers, School district partnership staff, consultants or contractors.

Task to be Accomplished	Person Responsible	Person Responsible for Monitoring	Projected Date of Completion	Documents or Forms
HR staff will review employment application information and complete background check to assess relevancy of any issue uncovered by complete background check including: • Arrest • Pending criminal charge or conviction	Executive Director Administrator for Human Resources	Administrator for Human Resources	As Deemed Necessary	Applications Request for Background Checks CCL Abuse & Neglect Background Check DPS Criminal History FBI Fingerprint Background Check *Sex Offender Tracking Background Check
HR staff will use Child Care and Development Fund (CCDF) disqualification factors described in 42 U.S.C. 9858f(c) (1)(D) and 42 U.S.C. 9858f(h)(1) or tribal disqualification factors to determine whether the prospective employee can be either hired or the current employee must be terminated.	Executive Director Administrator for Human Resources	Administrator for Human Resources	As deemed necessary	
HR staff will ensure a newly hired employee, consultant, or contractor does not have access to children until the complete background check process described in paragraph (b)(1) through (3) of this section is complete.	Executive Director Administrator for Human Resources	Administrator for Human Resources	As deemed necessary	

Hidalgo County Head Start Program

Human Resources Department Program Plan

2017-2018

Performance Standard: 1302.90 (b)(5) Personnel Policies

Goal: The HIDALGO COUNTY HEAD START PROGRAM will confirm the Program management functions are formally assigned to and adopted by staff within the program.

Objective: (5)The program must establish procedures for background check for employees, volunteers, School district partnership staff, consultants or contractors.

Task to be Accomplished	Person Responsible	Person Responsible for Monitoring	Projected Date of Completion	Documents or Forms
HR staff will conduct the complete background check for each employee, consultant, or contractor at least once every five years which must include each of the four checks listed in paragraphs (b)(1) and (2) of this section, and review and make employment decisions based on the information as described in paragraph (b)(3) of this section, unless the program can demonstrate to the responsible HHS official that it has a more stringent system in place that will ensure child safety.	Executive Director Administrator for Human Resources	Administrator for Human Resources	As Deemed Necessary	Applications Request for Background Checks CCL Abuse & Neglect Background Check DPS Criminal History FBI Fingerprint Background Check *Sex Offender Tracking Background Check

Hidalgo County Head Start Program

Human Resources Department Program Plan

2017-2018

Performance Standard: 1302.90 P (b)(6)personnel Policies

Goal: The HIDALGO COUNTY HEAD START PROGRAM will confirm the Program management functions are formally assigned to and adopted by staff within the program.

Objective: (6) The Program will confirm that Head Start parents, if qualified, are given employment preference with Head Start with the purpose to fulfill the Program's missions and goals.

Task to be Accomplished	Person Responsible	Person Responsible for Monitoring	Projected Date of Completion	Documents or Forms
• HR staff will provide priority consideration to current and former program parents for employment vacancies for which such parents apply and are qualified. • Staff will encourage Head Start parents to participate in Program activities, such as classrooms volunteering, parent committees, workshops and trainings.	Executive Director Administrator for Human Resources	Administrator for Human Resources Assistant Program Directors Administrator Assistant for Human Resources Education Area Directors	As deemed necessary	Applications

Hidalgo County Head Start Program

Human Resources Department Program Plan

2017-2018

Performance Standard: 1302.90 (c)(1)(i)(ii)(iii)(iv)(v)(2) Personnel Policies

Goal: The Hidalgo County Head Start Program will confirm that all staff, consultants, substitutes, volunteers and district partnership teachers abide by the Program's Standards of Conduct

Objective: (1) The Program will confirm that the Standards of Conduct Policy will support and reinforce appropriate professional behavior for staff, consultants, contractors, District partnership teachers, and volunteers.

Task to be Accomplished	Person Responsible	Person Responsible for Monitoring	Projected Date of Completion	Documents or Forms
All employees, staff, consultants, substitutes, volunteers and district partnership teachers will follow the Standards of Conduct required of County/Program employees.	Executive Area Director Administrator for Human Resources	Administrator for Human Resources Administrator for Education	New Hire Orientation Pre-Service Training	HC Civil Service Commission Rules Acknowledgement of Policy in Personnel File

Hidalgo County Head Start Program

Human Resources Department Program Plan

2017-2018

Performance Standard: 1302.90 (c)(1)(i)(ii)(iii)(iv)(v)(2) Personnel Policies

Goal: The Hidalgo County Head Start Program will confirm that all staff, consultants, substitutes, volunteers and district partnership teachers abide by the Program's Standards of Conduct

Objective: (1)(i)(ii)The Program will confirm that the Standards of Conduct Policy will support and reinforce appropriate professional behavior for staff, consultants, contractors, District partnership teachers, and volunteers.

Task to be Accomplished	Person Responsible	Person Responsible for Monitoring	Projected Date of Completion	Documents or Forms
Ensure staff, consultants, contractors, and volunteers must follow all Child Care Licensing requirements and Program Policies, including the following: • Discipline and Guidance Policy • Release of Children Policy • Reporting Child Abuse and Neglect Policy • Dress Code Policy • Confidentiality Policy • Standards of Conduct Policy • Civil Rights Act Policy • County of Hidalgo Drug and Alcohol Policy • Hidalgo County Ethics Policy • Sexual Harassment Awareness Policy	Executive Director Administrator for Human Services	Assistant Program Directors Administrator for Human Resources Program Directors Education Area Directors	As deemed necessary	Employee Acknowledgement of Policy

Hidalgo County Head Start Program

Human Resources Department Program Plan

2017-2018

Performance Standard: 1302.90 (c)(1)(i)(ii)(iii)(iv)(v)(2) Personnel Policies

Goal: The Hidalgo County Head Start Program will confirm that all staff, consultants, substitutes, volunteers and district partnership teachers abide by the Program's Standards of Conduct.

Objective: (iii) The Program will ensure that children of all races, religions, cultures and family backgrounds are treated with respect and consideration.

Task to be Accomplished	Person Responsible	Person Responsible for Monitoring	Projected Date of Completion	Documents or Forms
Staff, consultants, contractors, and volunteers will demonstrate respect and promote the unique identity of each child and family and do not stereotype on any basis, including gender, race, ethnicity, culture, religion, disability, sexual orientation, of family composition by: • Providing boys and girls with equal opportunities to participate in playing activities that promote independent learning. • Organizing the educational classrooms with materials in the learning centers and decorations that reflect the diversity of all children. • Offering engaging environment that exhibits the diversity of all children.	Executive Director	Assistant Program Directors Administrator for Human Services Program Directors Education Area Directors	As deemed necessary	Acknowledgement of Policy

Hidalgo County Head Start Program

Human Resources Department Program Plan

2017-2018

Performance Standard: 1302.90 (c)(1)(i)(ii)(iii)(iv)(v)(2) Personnel Policies

Goal: The Hidalgo County Head Start Program will confirm that all staff, consultants, substitutes, volunteers and district partnership teachers abide by the Program's Standards of Conduct.

Objective: (iv) The Program will conform with Federal, State, Tribal and local laws. Staff and consultants will follow the Confidentiality Policy concerning information about children, families and other staff members.

Task to be Accomplished	Person Responsible	Person Responsible for Monitoring	Projected Date of Completion	Documents or Forms
Will require staff, consultants, contractors, and volunteers to comply with program confidentiality policies concerning personally identifiable information about children, families, and other staff members in accordance with subject C of part 103 of this chapter and applicable federal, state, local, and tribal laws; and,	Executive Director	Assistant Program Directors Administrator for Human Resources Program Directors Education Area Directors	As deemed necessary	Acknowledgement of Policy
• Confidential information will be seen and discussed only with staff members who have the need for information to perform their job (children's records and family records)	Executive Team	Executive Team Center Mangers	On-going	Children Records Family Records
• Staff personnel records will not be disclosed without a written consent by the staff member submitted to the Administrator for Human Resources (Custodian of Records)	Administrator for Human Resources	Administrator for Human Resources	As requested	Personnel File
• Staff has the right to examine their own personnel files and to respond to the contents of those files.	Administrator for Human Resources	Administrator for Human Resources	As requested	Personnel File

Hidalgo County Head Start Program

Human Resources Department Program Plan

2017-2018

Performance Standard: 1302.90 (c)(1)(i)(ii)(iii)(iv)(v)(2) Personnel Policies

Goal: The Hidalgo County Head Start Program will confirm that all staff, consultants, substitutes, volunteers and district partnership teachers abide by the Program's Standards of Conduct.

Objective: (v) The Program will comply with child/staff ratio to maintain adult supervision at all times.

Task to be Accomplished	Person Responsible	Person Responsible for Monitoring	Projected Date of Completion	Documents or Forms
Center Managers and center staff will verify that child/staff ratio is maintained at all times and that no child is ever left alone or unattended. • (15 to 1 – 3 years old) • (18 to 1 – 4 years old)	Education Area Directors Center Managers	Center Manager Executive Team Support Service Staff	On-going	Classroom Roster Staff Roster Substitute Pool Volunteers

Hidalgo County Head Start Program

Human Resources Department Program Plan

2017-2018

Performance Standard: 1302.90 (c)(1)(i)(ii)(iii)(iv)(v)(2) Personnel Policies

Goal: The Hidalgo County Head Start Program will confirm that all staff, consultants, substitutes, volunteers and district partnership teachers abide by the Program's Standards of Conduct.

Objective: (2) The Program will verify that all staff, consultants and volunteers are accountable for meeting the agency's Standards of Conduct.

Task to be Accomplished	Person Responsible	Person Responsible for Monitoring	Projected Date of Completion	Documents or Forms
Personnel policies and procedures will include appropriate penalties for staff, consultants, and volunteers who violate the standards of conduct • The Program will verify that Policies and Procedures include provisions for appropriate penalties for violating the Standards of Conduct. • Misconduct and/or breach of the Standards of Conduct will be grounds for disciplinary action, which may include dismissal in accordance to the Hidalgo County Civil Service Commission Rules and Policies.	Executive Director	Administrator for Human Resources	On-going	Civil Service Personnel Policies and Procedures Personnel File Standards of Conduct Policy Form

Hidalgo County Head Start Program

Human Resources Department Program Plan

2017-2018

Performance Standard: 1302.90(d) Personnel Policies

Goal: The Hidalgo County Head Start Program will hire Program staff and consultants that are familiar with the ethnic background and heritage of families in the Program and must be able to communicate effectively in the family's primary language.

Objective: (d)(1)(2) The Program will establish an atmosphere of recognition and respect for the beliefs and practices of families and children that the Program serves.

Task to be Accomplished	Person Responsible	Person Responsible for Monitoring	Projected Date of Completion	Documents or Forms
Will ensure staff and program consultants or contractors are familiar with the ethnic backgrounds and heritages of families in the program and are able to serve and effectively communicate, either directly or through interpretation and translation, with children who are dual language learners and to the extent feasible, with families with limited English proficiency. If a majority of children in class speak the same language, at least one class member or home visitor must speak will speak the language of the children.	Executive Director Assistant Program Directors Administrator for Human Resources	Executive Team	As deemed necessary	Job Announcement Job Description Personnel File Request for Qualifications (RFQ's) Job Standard Checklist
• The Program will recruit qualified bilingual staff and consultants who are culturally and ethnically diverse to maintain appropriate representation of the ethnicity and cultures of families served	Executive Director Assistant Program Directors Administrator for Human Resources	Executive Team	As deem necessary	Job Announcement Job Description Personnel File Interview Questionnaire

Performance Standard: 1302.90(d) Personnel Policies (continued)

Goal: The Hidalgo County Head Start Program will hire Program staff and consultants that are familiar with the ethnic background and heritage of families in the Program and must be able to communicate effectively in the family's primary language.
Objective: (d)(1)(2) The Program will establish an atmosphere of recognition and respect for the beliefs and practices of families and children that the Program serves.

Task to be Accomplished	Person Responsible	Person Responsible for Monitoring	Projected Date of Completion	Documents or Forms
• The Program will employ staff and recruit parents from the community to use as resources for understanding different cultures	Executive Director Assistant Program Directors Administrator for Human Resources	Administrator for Human Resources Assistant Administrator for Human Resources	As deemed necessary	Job Announcement Job Description Personnel File Interview Questionnaire
• The Program will provide staff development trainings to develop skills in culture differences and conflict resolutions	Administrator for Education Staff Development Director	Executive Team	As deemed necessary As deemed necessary	Teacher Lesson Plans Training Calendar
• The Program will encourage the use of community resources to help staff and parents appreciate and enjoy diverse cultures	Administrator for Education	Executive Team	As deemed necessary	Curriculum Program Calendar Teacher Lesson Plans
• The Program will conduct staff trainings together with local organizations to get familiarized with cultural diversity	Staff Development Director	Staff Development Director	Pre-Service Training On-going training	Program Training Agendas Training Calendar

Hidalgo County Head Start Program

Human Resources Department Program Plan

2017-2018

Performance Standard: 1302.91(a)(b)(c)(d)(1)(2)(e)(1)(2)(i)(ii)(3)(4)(i)(ii)(5)(6)(i)(ii)(7)(8)(i)(ii)(iii)(f) Staff Qualifications and Competency Requirements)

Goal: The Hidalgo County Head Start Program will secure that staff and consultants that are hired are qualified and have the knowledge, skills and experience in order to perform their assigned functions responsibly.

Objective: (a) The Program will designate staff that is recruited and hired to manage the delivery of quality services to children and families.

Task to be Accomplished	Person Responsible	Person Responsible for Monitoring	Projected Date of Completion	Documents or Forms
The Hidalgo County Head Start Program will recruit highly qualified staff by advertising through the Hidalgo County Website, internal and open job announcements, or recruitment at UTPA, and STC. In addition, the program highly considers Head Start parents who qualify for positions within the Program.	Executive Director Administrator for Human Resources Staff Development Director	Administrator for Human Resources	On-going On-going	Hidalgo County Website Job Announcement (Website, internally)
• •Qualified staff will be hired accordingly for each position within the Hidalgo County Head Start Program • Qualified staff must be sensitive to the cultural differences of low income children and families	Executive Director Executive Team	Assistant Program Directors Administrator for Human Resources Administrator for Education Executive Team	On-going	Requisitions Job Announcement Interviews Questionnaire Employee Performance Review Forms

Hidalgo County Head Start Program

Human Resources Department Program Plan

2017-2018

Performance Standard: 1302.91(a)(b)(c)(d)(1)(2)(e)(1)(2)(i)(ii)(3)(4)(i)(ii)(5)(6)(i)(ii)(7)(8)(i)(ii)(iii)(f) Staff Qualifications and Competency Requirements)

Goal: The Hidalgo County Head Start Program will secure that staff and consultants that are hired are qualified and have the knowledge, skills and experience in order to perform their assigned functions responsibly.

Objective: (b) The Program will designate staff that is recruited and hired to manage the delivery of quality services to children and families.

Task to be Accomplished	Person Responsible	Person Responsible for Monitoring	Projected Date of Completion	Documents or Forms
A program will ensure HS directors hired after November 7, 2016, have, at a minimum, a baccalaureate degree and experience in supervision of staff, fiscal management, and administration.	Grantee Board (Commissioner's Court) Policy Council Civil Service	Policy Council	As deemed necessary	Job Description Job Announcement Job Application Resume Credentials Personnel File Background Checks

Hidalgo County Head Start Program

Human Resources Department Program Plan

2017-2018

Performance Standard: 1302.91(a)(b)(c)(d)(1)(2)(e)(1)(2)(i)(ii)(3)(4)(i)(ii)(5)(6)(i)(ii)(7)(8)(i)(ii)(iii)(f) Staff Qualifications and Competency Requirements)

Goal: The Hidalgo County Head Start Program will secure that staff and consultants that are hired are qualified and have the knowledge, skills and experience in order to perform their assigned functions responsibly.

Objective: (c) The Program will designate staff that is recruited and hired to manage the delivery of quality services to children and families.

Task to be Accomplished	Person Responsible	Person Responsible for Monitoring	Projected Date of Completion	Documents or Forms
Fiscal Officer. A program will ensure the fiscal officer hired after November 7, 2016, is a certified public accountant or has , at a minimum, a baccalaureate degree in accounting, business, fiscal management, or a related field.	Executive Director Assistant Program Directors	Administrator for Human Resources	As deemed necessary	Job Description Job Announcement Job Application Resume Credentials Personnel File Background Checks

Hidalgo County Head Start Program

Human Resources Department Program Plan

2017-2018

Performance Standard: 1302.91(a)(b)(c)(d)(1)(2)(e)(1)(2)(i)(ii)(3)(4)(i)(ii)(5)(6)(i)(ii)(7)(8)(i)(ii)(iii)(f) Staff Qualifications and Competency Requirements)

Goal: The Hidalgo County Head Start Program will secure that staff and consultants that are hired are qualified and have the knowledge, skills and experience in order to perform their assigned functions responsibly.

Objective: (d)(1)(2) The Program will designate staff that is recruited and hired to manage the delivery of quality services to children and families

Task to be Accomplished	Person Responsible	Person Responsible for Monitoring	Projected Date of Completion	Documents or Forms
Program will ensure staff responsible for management and oversight of family services, health services, and services to children with disabilities hired after November 7, 2016 will have, at a minimum, a baccalaureate degree, preferably to one of more of the disciplines they oversee. Program will ensure staff and consultants that serve as education managers or coordinators, including those that serve as curriculum specialists, have a baccalaureate or advanced degree in early childhood education or a baccalaureate or advanced degree and equivalent coursework in early childhood education with early education teaching experience.	Executive Director Assistant Program Directors	Administrator for Human Resources	As deemed necessary	Job Description Job Announcement Job Application Resume Credentials Personnel File Background Checks

Hidalgo County Head Start Program

Human Resources Department Program Plan

2017-2018

Performance Standard: 1302.91(a)(b)(c)(d)(1)(2)(e)(1)(2)(i)(ii)(3)(4)(i)(ii)(5)(6)(i)(ii)(7)(8)(i)(ii)(iii)(f) Staff Qualifications and Competency Requirements

Goal: The Hidalgo County Head Start Program will secure that staff and consultants that are hired are qualified and have the knowledge, skills and experience in order to perform their assigned functions responsibly.

Objective:(e)(1)(2)(i)(ii) The Program will designate staff that is recruited and hired to manage the delivery of quality services to children and families

Task to be Accomplished	Person Responsible	Person Responsible for Monitoring	Projected Date of Completion	Documents or Forms
(1) Early Head Start center-based teacher qualification requirements. (2) Head Start center-based based teacher qualifications requirements. • The Secretary must ensure on less than fifty percent of all Head Start teachers, nationwide, have a baccalaureate in child development, early childhood education, or equivalent coursework. • Program will ensure all center based teachers have at least an associate's or bachelor's degree in child development or early childhood education, equivalent coursework, or otherwise meet the requirements of section 648(a)(3)(B) of the Act	N/A Executive Director	Assistant Program Directors Administrator for Human Resources Administrator for Education	As deemed necessary	Job Description Job Announcement Job Application Resume Credentials Personnel File Background Checks

Hidalgo County Head Start Program

Human Resources Department Program Plan

2017-2018

Performance Standard: 1302.91(a)(b)(c)(d)(1)(2)(e)(1)(2)(i)(ii)(3)(4)(i)(ii)(5)(6)(i)(ii)(7)(8)(i)(ii)(iii)(f) Staff Qualifications and Competency Requirements

Goal: The Hidalgo County Head Start Program will secure that staff and consultants that are hired are qualified and have the knowledge, skills and experience in order to perform their assigned functions responsibly

Objective: (3)The Program will designate staff that is recruited and hired to manage the delivery of quality services to children and families

Task to be Accomplished	Person Responsible	Person Responsible for Monitoring	Projected Date of Completion	Documents or Forms
Program will ensure Head Start assistant teachers, at a minimum, have a CDA credential or a state-awarded certificate that meets or exceeds the requirements for a CDA credential, are enrolled in a program that will lead to an associate or baccalaureate degree or, or enrolled in a CDA credential program to be completed within two years of the time of hire.	Executive Director	Administrator for Human Resources Administrator for Education Education Area Directors	As deemed necessary	Job Description Job Announcement Job Application Resume Credentials Personnel File Background Checks

Hidalgo County Head Start Program

Human Resources Department Program Plan

2017-2018

Performance Standard: 1302.91(a)(b)(c)(d)(1)(2)(e)(1)(2)(i)(ii)(3)(4)(i)(ii)(5)(6)(i)(ii)(7)(8)(i)(ii)(iii)(f) Staff Qualifications and Competency Requirements

Goal: The Hidalgo County Head Start Program will secure that staff and consultants that are hired are qualified and have the knowledge, skills and experience in order to perform their assigned functions responsibly

Objective: (4)(i)(ii)The Program will designate staff that is recruited and hired to manage the delivery of quality services to children and families

Task to be Accomplished	Person Responsible	Person Responsible for Monitoring	Projected Date of Completion	Documents or Forms
Family child care provider qualification requirements. (i) Program will ensure family child care providers have a previous child care experience and, at a minimum, are enrolled in a Family Child Care CDA program or state equivalent, or an associate's or baccalaureate degree or are enrolled in a CDA credential program to be completed with two years of the time of hire. (ii) By August 1, 2018, a child development specialist, will have, at a minimum, a required baccalaureate degree in child development, early childhood education, or related field	Executive Director	Administrator for Human Resources Family Service Director	As deemed necessary	Job Description Job Announcement Job Application Resume Credentials Personnel File Background Checks

Hidalgo County Head Start Program

Human Resources Department Program Plan

2017-2018

Performance Standard: 1302.91(a)(b)(c)(d)(1)(2)(e)(1)(2)(i)(ii)(3)(4)(i)(ii)(5)(6)(i)(ii)(7)(8)(i)(ii)(iii)(f) Staff Qualifications and Competency Requirements

Goal: The Hidalgo County Head Start Program will secure that staff and consultants that are hired are qualified and have the knowledge, skills and experience in order to perform their assigned functions responsibly

Objective: (5)(6)The Program will designate staff that is recruited and hired to manage the delivery of quality services to children and families

Task to be Accomplished	Person Responsible	Person Responsible for Monitoring	Projected Date of Completion	Documents or Forms
Center-based teachers, assistant teachers, and family child care provider competencies. • Program will ensure center-based teachers, assistant teachers, and family child care providers demonstrate, competency to provide effective and nurturing teacher child interactions, plan and implement learning experiences that ensure effective curriculum implementation and use of assessment and promote children's progress across the standards described in the Head Start Early Learning Outcomes Framework: Ages Birth to Five and applicable state early learning and development standards, including for children with disabilities and dual language learners, as appropriate. (6) Home Visitors. A program will ensure home visitors providing home-based education services.	Executive Director N/A	Administrator for Human Resources Administrator for Education Education Area Directors	As deemed necessary	Job Description Job Announcement Job Application Resume Credentials Personnel File Background Checks

Hidalgo County Head Start Program

Human Resources Department Program Plan

2017-2018

Performance Standard: 1302.91(a)(b)(c)(d)(1)(2)(e)(1)(2)(i)(ii)(3)(4)(i)(ii)(5)(6)(i)(ii)(7)(8)(i)(ii)(iii)(f) Staff Qualifications and Competency Requirements

Goal: The Hidalgo County Head Start Program will secure that staff and consultants that are hired are qualified and have the knowledge, skills and experience in order to perform their assigned functions responsibly

Objective: (7)The Program will designate staff that is recruited and hired to manage the delivery of quality services to children and families

Task to be Accomplished	Person Responsible	Person Responsible for Monitoring	Projected Date of Completion	Documents or Forms
<u>Family services staff qualification requirements.</u> • Program will ensure staff who work directly with families on the family partnership process hired after November 7, 2016, have within eighteen month of hire, at a minimum, a credential or certification in social work, human services, family services, counseling or a related field.	Executive Director	Administrator for Human Resources Family Service Director	As deemed necessary	Job Description Job Announcement Job Application Resume Credentials Personnel File Background Checks

Hidalgo County Head Start Program

Human Resources Department Program Plan

2017-2018

Performance Standard: 1302.91(a)(b)(c)(d)(1)(2)(e)(1)(2)(i)(ii)(3)(4)(i)(ii)(5)(6)(i)(ii)(7)(8)(i)(ii)(iii)(f) Staff Qualifications and Competency Requirements

Goal: The Hidalgo County Head Start Program will secure that staff and consultants that are hired are qualified and have the knowledge, skills and experience in order to perform their assigned functions responsibly

Objective: (8)(i)(ii)(iii)The Program will designate staff that is recruited and hired to manage the delivery of quality services to children and families

Task to be Accomplished	Person Responsible	Person Responsible for Monitoring	Projected Date of Completion	Documents or Forms
(1) Health professional qualification requirements. (i) A program will ensure health procedures are performed only by a licensed or certified health professional. (ii) A program will ensure all mental health consultants are licensed or certified mental health professionals. A program must use mental health consultants with knowledge or experience in serving young children and their families, if available in the community. (i) A program will use staff or consultants to support nutrition services who are registered dieticians or nutritionists with appropriate qualifications.	Executive Director	Administrator for Human Resources Assistant Program Directors	As deemed necessary	Job Description Job Announcement Job Application Resume Credentials Personnel File Background Checks

Hidalgo County Head Start Program

Human Resources Department Program Plan

2017-2018

Performance Standard: 1302.91(a)(b)(c)(d)(1)(2)(e)(1)(2)(i)(ii)(3)(4)(i)(ii)(5)(6)(i)(ii)(7)(8)(i)(ii)(iii)(f) Staff Qualifications and Competency Requirements

Goal: The Hidalgo County Head Start Program will secure that staff and consultants that are hired are qualified and have the knowledge, skills and experience in order to perform their assigned functions responsibly

Objective: (f) The Program will designate staff that is recruited and hired to manage the delivery of quality services to children and families

Task to be Accomplished	Person Responsible	Person Responsible for Monitoring	Projected Date of Completion	Documents or Forms
Coaches. A program will ensure coaches providing the services described in 1302.92(c) have a minimum of a baccalaureate degree in early childhood education or a related field.	Executive Director	Administrator for Human Resources Assistant Program Directors Administrator for Education	As deemed necessary	Job Description Job Announcement Job Application Resume Credentials Personnel File Background Checks

Hidalgo County Head Start Program

Human Resources Department Program Plan

2017-2018

Performance Standard: 1302.92(a)(b)(1)(2)(3)(4)(5) Training and professional development

Goal: The Hidalgo County Head Start Program will confirm that orientation to all new staff, consultants, volunteers and district partnership teachers include the goals and underlying philosophy of Head Start and the manner the Program is implemented.

Objective: (a)The Program will assist staff, volunteers, district partnership teachers and consultants in acquiring or increasing the knowledge and skills required to fulfill their job responsibilities.

Task to be Accomplished	Person Responsible	Person Responsible for Monitoring	Projected Date of Completion	Documents or Forms
A program will provide to all new staff, consultants, and volunteers an orientation that focuses on, at a minimum, the goals and underlying philosophy of the program and on the ways they are implemented. • All volunteers will receive orientation training on the goals and philosophy of Head Start through the Parent Volunteer and Fatherhood Conferences.	Administrator for Human Resources Staff Development Director	Staff Development Director	On-going	Orientation Agendas

Hidalgo County Head Start Program

Human Resources Department Program Plan

2017-2018

Performance Standard: 1302.92(a)(b)(1)(2)(3)(4)(5) Training and professional development

Goal: The Hidalgo County Head Start Program will establish and implement a structured approach to staff training and development, with a designed purpose to help build relationships among staff and to assist staff in acquiring or increasing the knowledge and skills needed to fulfill their job responsibilities.

Objective: (b(1) The Program will maintain a standard of excellence by having well trained and qualified staff.

Task to be Accomplished	Person Responsible	Person Responsible for Monitoring	Projected Date of Completion	Documents or Forms
A Program will establish and implement a systematic approach to staff training and professional development designed to assist staff in acquiring or increasing the knowledge and skills needed to provide high-quality, comprehensive services within the scope of their job responsibilities, and attached to academic credit as appropriate. At a minimum, the system will include: • Staff completing a minimum of 15 clock hours of professional development per year. For teaching staff, such professional development must meet the requirements described in sections 648A(a)(5) of the Act.	Administrator for Education Administrator for Human Resources Staff Development Director Executive Team	Administrator for Education Staff Development Director Education Area Directors Executive Team	On-going	Staff Development Files Training Calendars Agendas

Hidalgo County Head Start Program

Human Resources Department Program Plan

2017-2018

Performance Standard: 1302.92(a)(b)(1)(2)(3)(4)(5) Training and professional development (continued)

Goal: The Hidalgo County Head Start Program will establish and implement a structured approach to staff training and development, with a designed purpose to help build relationships among staff and to assist staff in acquiring or increasing the knowledge and skills needed to fulfill their job responsibilities.

Objective: (b(2) The Program will maintain a standard of excellence by having well trained and qualified staff.

Task to be Accomplished	Person Responsible	Person Responsible for Monitoring	Projected Date of Completion	Documents or Forms
• Training on methods to handle suspected or known child abuse and neglect cases, that comply with applicable federal, state, local, and tribal laws. • The Program will provide staff and district partnership teachers with the policies and guidelines on how to identify and report suspected child abuse and neglect. • Staff and district partnership teachers will sign on a yearly basis, a statement of acknowledgment on how to identify and report suspected child abuse and neglect. • Staff and district partnership teachers are provided annual training on identifying and reporting child abuse and neglect during Pre-Service.	Administrator for Education Administrator for Human Resources Staff Development Director Executive Team Compliance Monitor Director Health Services Director	Administrator for Education Assistant Administrator for Human Resources Staff Development Director Education Area Directors Executive Team Compliance Monitor Director	On-going	Staff Development Files Training Calendars Agendas

Performance Standard: 1302.92(a)(b)(1)(2)(3)(4)(5) Training and professional development (continued)

Goal: The Hidalgo County Head Start Program will establish and implement a structured approach to staff training and development, with a designed purpose to help build relationships among staff and to assist staff in acquiring or increasing the knowledge and skills needed to fulfill their job responsibilities.

Objective: (b)(3)(4) The Program will maintain a standard of excellence by having well trained and qualified staff.

Task to be Accomplished	Person Responsible	Person Responsible for Monitoring	Projected Date of Completion	Documents or Forms
• Training for child and family services staff on best practices for implementing family engagement strategies in a systemic way, as described throughout this part • Training for child and family services staff, including staff that work on family services, health, and disabilities, that builds their knowledge, experience, and competencies to improve child and family outcomes	Administrator for Education Administrator for Human Resources Staff Development Director Executive Team	Administrator for Education Staff Development Director Education Area Directors Executive Team	On-going	Staff Development Files Training Calendars Agendas

.

Performance Standard: 1302.92(a)(b)(1)(2)(3)(4)(5) Training and professional development (continued)

Goal: The Hidalgo County Head Start Program will establish and implement a structured approach to staff training and development, with a designed purpose to help build relationships among staff and to assist staff in acquiring or increasing the knowledge and skills needed to fulfill their job responsibilities.

Objective: (b)(5) The Program will maintain a standard of excellence by having well trained and qualified staff

.

Task to be Accomplished	Person Responsible	Person Responsible for Monitoring	Projected Date of Completion	Documents or Forms
Research-based approaches to professional development for education staff, that are focused on effective curricula implementation, knowledge of the content in Head Start Early Learning Outcomes Framework: Ages Birth to Five, partnering with families, supporting children with disabilities and their families, providing effective and nurturing adult-child interactions, supporting dual language learners as appropriate, addressing challenging behaviors, preparing children and families for transitions (as described in subpart G of this part), and use data to individualize learning experiences to improve outcomes for all children.	Administrator for Education Administrator for Human Resources Staff Development Director Executive Team Center Managers Teachers	Administrator for Education Staff Development Director Education Area Directors Executive Team Center Managers Teachers	On-going	Staff Development Files Training Calendars Agendas

Hidalgo County Head Start Program

Human Resources Department Program Plan

2017-2018

Performance Standard: 1302.93 (a)(b) Staff Health and Wellness

Goal: The Hidalgo County Head Start Program will confirm that all staff has an initial Health Appraisals that includes screening for tuberculosis and a periodic re-examination

Objective: (a) The Program will endorse a safe and healthy environment for children and staff.

Task to be Accomplished	Person Responsible	Person Responsible for Monitoring	Projected Date of Completion	Documents or Forms
Will ensure each staff member has an initial health examination and periodic re-examination as recommended by their health care provider in accordance with state, tribal, or local requirements that include screeners or tests for communicable diseases, as appropriate. The program will ensure staff do not, because of communicable diseases, pose a significant risk to the health and safety of others in the program that cannot be eliminated or reduced by reasonable accommodation, in accordance with the Americans with Disabilities Act and section 504 of the Rehabilitation Act.	Administrator for Human Resources	Administrator for Human Resources Assistant Administrator for Human Resources	On-going	Health Appraisal Tuberculosis Form

Hidalgo County Head Start Program

Human Resources Department Program Plan

2017-2018

Performance Standard: 1302.93 (a)(b) Staff Health and Wellness (continued)

Goal: The Hidalgo County Head Start Program will confirm that all staff has an initial Health Appraisals that includes screening for tuberculosis and a periodic re-examination

Objective: (a) The Program will endorse a safe and healthy environment for children and staff.

Task to be Accomplished	Person Responsible	Person Responsible for Monitoring	Projected Date of Completion	Documents or Forms
• Upon employment, the employee will complete an initial health appraisal no later than thirty (30) working days after employment; thereafter, screened every three (3) years (includes tuberculosis screening). The Tuberculosis Questionnaire will be mandated annually.	Administrator for Human Resources	Administrator for Human Resources Assistant Administrator for Human Resources	On-going	Health Appraisal Tuberculosis Form
• Bus Drivers (CDL): Once hired, the bus driver will submit a Health Appraisal and Medical Examiner Certificate (Required by DOT); thereafter, will be screened every two (2) years (includes tuberculosis screening). Bus drivers will not drive the bus until the Health Appraisal and Medical Certificate is received at the Human Resources Department	Administrator for Human Resources Field Operation Director	Administrator for Human Resources Assistant Administrator for Human Resources	On-going	Medical Examiner Certificate Health Appraisal

Hidalgo County Head Start Program

Human Resources Department Program Plan

2017-2018

Performance Standard: 1302.93 (a)(b) Staff Health and Wellness (continued)

Goal: The Hidalgo County Head Start Program will confirm that all staff has an initial Health Appraisals that includes screening for tuberculosis and a periodic re-examination

Objective: (a) The Program will endorse a safe and healthy environment for children and staff.

Task to be Accomplished	Person Responsible	Person Responsible for Monitoring	Projected Date of Completion	Documents or Forms
• Employees will be given a 1st, 2nd and Final Notice to comply with the health examination requirements • Upon the final notice, employees will be given five (5) working days, to comply with the health examination requirements • After five (5) working days employees will be subject to disciplinary action constituting leave without pay until the Health Appraisal as provided in Civil Service Policy Standards of Conduct • Staff, volunteers, substitutes, and District partner Teachers must comply with acknowledgement of the vaccine-preventable diseases control and prevention policy to protect the health and safety of children, employees to comply with standards and state law.	Administrator for Human Resources Health Services Director	Administrator for Human Resources Assistant Administrator for Human Resources Health Services Director	On-going	Health Appraisal Tuberculosis Form Vaccine Preventable Disease Policy Sanitation and Infection Control Policy

Performance Standard: 1302.93 (a)(b) Staff Health and Wellness (continued)

Goal: The Hidalgo County Head Start Program will confirm that all staff receives mental health and wellness information with concerns that may affect their job performance.

Objective: (b). The Program will verify that the complexity of challenges in caring for children and families will not generate problems of "burnout" to staff.

Task to be Accomplished	Person Responsible	Person Responsible for Monitoring	Projected Date of Completion	Documents or Forms
Will make mental health and wellness information available to staff regarding health issues that may affect their job performance, and must provide regularly scheduled opportunities to learn about mental health, wellness, and health education. • Providing information on job related stress, mental health and wellness training • Sponsoring mental and physical wellness programs such as exercise groups or staff support groups • Making confidential referrals to community agencies such as mental health centers and/or alcohol and drug counseling centers	Administrator for Education Administrator for Human Resources Health Services Director Mental Health Counselor	Health Services Director Mental Health Counselor	On-going	Training Agendas Referrals

Hidalgo County Head Start Program

Human Resources Department Program Plan

2017-2018

Performance Standard: 1302.94 (a) (b) Volunteers

Goal:. The Hidalgo County Head Start Program will confirm that regular volunteers be screened for tuberculosis

Objective:. (a)The Program will endorse a safe healthy environment for children and staff

Task to be Accomplished	Person Responsible	Person Responsible for Monitoring	Projected Date of Completion	Documents or Forms
A program will ensure regular volunteers have been screened for appropriate communicable diseases in accordance with state, tribal or local laws. In the absence of state, tribal or local laws, the Health Services Advisory Committee must be consulted regarding the need for such screenings. • TB Screening at Parent/Volunteer training; and thereafter, whenever necessary	Administrator for Human Resources Family Services Director Center Managers	Center Manager	On-going	Volunteer File

Hidalgo County Head Start Program

Human Resources Department Program Plan

2017-2018

Performance Standard: 1302.94 (a) (b) Volunteers

Goal: The HIDALGO COUNTY HEAD START PROGRAM will conform that staff supervises the outdoor and indoor play areas in such a way that children's safety can be easily monitored and secured..

Objective: (b)The Program must ensure children are never left alone with volunteers.

Task to be Accomplished	Person Responsible	Person Responsible for Monitoring	Projected Date of Completion	Documents or Forms
The Program will verify that staff: • Make regular inspections of safety and cleanliness of indoor and outdoor play areas • Monitor outdoor equipment will be monitored on regular basis • Comply with daily schedule for outdoor play, which will ensure proper staff/ratio supervision	Center Managers Teachers	Education Area Directors Center Managers Teachers	On-going	Monitoring Checklist Daily Schedule Daily playground inspection

MENTAL HEALTH SERVICES PLAN

Hidalgo County Head Start Program

Education Department Program Plan

2017-2018

Performance Standard: 1302.45 (a) (1)
Goal: The HIDALGO COUNTY HEAD START PROGRAM will support a program-wide culture that promotes children's mental health, social and emotional well-being, and overall health.
Objective: To provide support for effective classroom management and positive learning environments

Task to be Accomplished	Person Responsible	Person Responsible for Monitoring	Projected Date of Completion	Documents or Forms
Mental Health Counselor will provide program staff with ongoing consultation and strategies on Positive Behavior Support. Staff Development will be provided on responsive classroom behavior interventions and supportive strategies for teachers, center managers and teacher assistants. Mental Health Counselor will provide teachers and program staff with strategies to work with children who are exhibiting challenging behaviors	-Teachers -Teacher Assistants -Support Staff -Center Manager	-Mental Health Counselor -Education Area Directors	-On-going	-PBS Plan -Staff Development Binder

Hidalgo County Head Start Program

Education Department Program Plan

2017-2018

Performance Standard: 1302.45 (a) (2)
Goal: The HIDALGO COUNTY HEAD START PROGRAM will support a program-wide culture that promotes children's mental health, social and emotional well-being, and overall health.
Objective: To secure mental health services on a timely manner and to ensure that a Mental Health Counselor is available to partner with staff and families in a consistent and effective manner.

Task to be Accomplished	Person Responsible	Person Responsible for Monitoring	Projected Date of Completion	Documents or Forms
Mental Health Providers will submit a Fall and Spring Classroom Observation schedule before conducting on site observations. Mental Health Providers will consult and discuss observation findings with on-site Center Manager and Mental Health Counselor. Mental Health Counselor will be available for parent consultation as needed. Mental Health Counselor will coordinate with center staff to present at monthly parent meetings as needed. Mental Health Counselor will attend scheduled Program Staffing Meetings to address the needs of each individual child as needed.	-Mental Health Counselor -Education Area Directors -On Site Center Manager -Contracted Mental Health Providers	-Mental Health Counselor -Administrator for Education -Education Area Directors	-On-going	-Mental Health Providers Fall and Spring Classroom Observation Schedule -Mental Health Services Classroom Observation Report -Mental Health On Site Observation Checklist

Hidalgo County Head Start Program

Education Department Program Plan

2017-2018

Performance Standard: 1302.45 (a) (3)
Goal: The HIDALGO COUNTY HEAD START PROGRAM will support a program-wide culture that promotes children's mental health, social and emotional well-being, and overall health.
Objective: To obtain parental consent for mental health consultation services at enrollment.

Task to be Accomplished	Person Responsible	Person Responsible for Monitoring	Projected Date of Completion	Documents or Forms
Center Staff will obtain parental consent for Mental Health Services during enrollment.	-Center Manager -Support Service Assistant -Teacher	-Mental Health Counselor -Center Manager	-On-going	-Consent for Assessments, Screenings and Activities Form

Hidalgo County Head Start Program

Education Department Program Plan

2017-2018

Performance Standard: 1302.45 (a) (4)
Goal: The HIDALGO COUNTY HEAD START PROGRAM will support a program-wide culture that promotes children's mental health, social and emotional well-being, and overall health.
Objective: To build community partnerships to facilitate access to additional mental health resources and services.

Task to be Accomplished	Person Responsible	Person Responsible for Monitoring	Projected Date of Completion	Documents or Forms
Mental Health Counselor will coordinate with Transition Department to make Community Resources available to Program Staff by providing training on resources, organizations and interventions. Mental Health Counselor will make Health and Human Services Directory available to each center. Mental Health Counselor will provide each center with a list of Mental Health Resources to post on the Parent Corner. Mental Health Counselor will network with Community Agencies to facilitate services for parents and families. Mental Health Counselor will assist parents and families to access Community Resources through referrals.	-Support Service Assistant -Center Manager	-Mental Health Counselor -Transition Director	-On-going	-HCHSP Community Resource Directory -Health and Human Services Directory Book -Agency to Agency Referral Form -Inter Agency Referral Form -Program Information Report -BOY Network Meeting

Hidalgo County Head Start Program

Education Department Program Plan

2017-2018

Performance Standard: 1302.45 (b) (1) (2) (3) (4) (5) (6)
Goal: The HIDALGO COUNTY HEAD START PROGRAM will ensure that Mental Health Consultants assist in addressing the needs of children with challenging behaviors.
Objective: To ensure Mental Health Provider/Counselor assist in identifying and supporting children with mental health and social and emotional concerns.

Task to be Accomplished	Person Responsible	Person Responsible for Monitoring	Projected Date of Completion	Documents or Forms
An Individualized Positive Guidance Plan is done for children with challenging behaviors. Strategies are aligned with teacher and home connections. To enhance and strengthen supportive environments and relationships in the home, trainings are provided for parents through community services. Parents will be provided with a newsletter twice a year with a Mental Health section which will address articles related to social emotional development. Staff Development will be provided on responsive classroom behavior interventions and supportive strategies for teachers, center managers and teacher assistants. Parents will be provided with trainings, meetings and conferences to help their children practice skills and encourage healthy social and emotional growth.	-Teachers -Support Service Assistants -Center Managers	-Mental Health Counselor -Education Area Directors -Administrator for Education	-On-going	-Devereux Early Childhood Assessment -Individual Child Profile -Classroom Behavior Observation Form -Parent Meeting Sign In -Staffing Outcome Form

Hidalgo County Head Start Program

Education Department Program Plan

2017-2018

Performance Standard: 1302.45 (b) (1) (2) (3) (4) (5) (6)
Goal: The HIDALGO COUNTY HEAD START PROGRAM will ensure that Mental Health Consultants assist in addressing the needs of children with challenging behaviors.
Objective: To ensure Mental Health Provider/Counselor assist in identifying and supporting children with mental health and social and emotional concerns.

Task to be Accomplished	Person Responsible	Person Responsible for Monitoring	Projected Date of Completion	Documents or Forms
Children will be assessed for behavioral concerns and identified within the first 45 days of enrollment using DECA. Mental Health Providers will conduct two classroom observations and report findings and provide feedback and recommendations to Center Managers and Mental Health Counselor. Mental Health Counselor will provide teachers and program staff with strategies to work with children who are exhibiting challenging behaviors . Mental Health Counselor will refer children and families to community agencies for services. The results for DECA will be discussed with parents or guardians during home visits.	-Teachers -Support Service Assistants -Center Managers	-Mental Health Counselor -Education Area Directors -Administrator for Education	-On-going	-Devereux Early Childhood Assessment -Individual Child Profile -Classroom Behavior Observation Form -Parent Meeting Sign In -Staffing Outcome Form

Hidalgo County Head Start Program

Education Department Program Plan

2017-2018

Performance Standard: 1302.45 (b) (1) (2) (3) (4) (5) (6)
Goal: The HIDALGO COUNTY HEAD START PROGRAM will ensure that Mental Health Consultants assist in addressing the needs of children with challenging behaviors.
Objective: To ensure Mental Health Provider/Counselor assist in identifying and supporting children with mental health and social and emotional concerns.

Task to be Accomplished	Person Responsible	Person Responsible for Monitoring	Projected Date of Completion	Documents or Forms
A parent orientation will be held at the beginning of the year to provide parents with a handbook on Mental Health Services. The Mental Health Counselor will work in collaboration with Family Services Department, parents and the Local Education Agency to provide appropriate interventions.	-Teachers -Support Service Assistants -Center Managers	-Mental Health Counselor -Education Area Directors -Administrator for Education	-On-going	-Devereux Early Childhood Assessment -Individual Child Profile -Classroom Behavior Observation Form -Parent Meeting Sign In -Staffing Outcome Form

SPECIAL SERVICES PLAN

Hidalgo County
Head Start Program



Special Services
Program Plan
2017 - 2018

HIDALGO COUNTY HEAD START PROGRAM

Special Services

ACRONYMS

ADA- Americans with Disabilities Act

ARD- Admissions, Review, and Dismissal

DCA- Disability Classroom Assistant

DECA- Deveraux Early Childhood Assessment

ECI- Early Childhood Intervention (Serve Children 0-3)

EPSDT- Early Periodic Screening Development Test

ESC- Education Service Center

FIE- Full Individual Evaluation

FPA- Family Partnership Agreement

HIPPA- Health Insurance Portability Accountability Act

HR- Human Resources

HS- Head Start

IDEA- Individuals with Disabilities Education Act

IEP- Individual Education Plan (for children age 3 and over)

IFSP- Individual Family Service Plan (for ages 0-3)

LAP-D- Learning Accomplishment Profile Diagnostic

LEA- Local Education Agency

MH- Mental Health

MOU- Memorandum of Understanding

OT- Occupational Therapy

POC- Plan of Care

PPCD- Pre-School Program for Children with Disabilities

PSA- Public Service Announcement

PT- Physical Therapy

SLP- Speech Language Pathologist

SSI- Supplemental Security Income

TEA- Texas Education Agency

T/TA- Training and Technical Assistance

HIDALGO COUNTY HEAD START PROGRAM
Special Services Program Plan
2017-2018

Performance Standard: 45 CFR Part 1302.13

Goal: The Hidalgo County Head Start Program will establish and maintain an outreach and recruitment process to actively locate and recruit children with disabilities/significant disabilities.

Objective: To secure enrollment opportunities for children with disabilities; provide training for staff regarding disability regulations 45 CFR part 84, nondiscrimination on the basis of a disability/ADA; coordinate/collaborate recruitment efforts with LEA, ECI's, and Child Find.

TASK TO BE ACCOMPLISHED	PERSON RESPONSIBLE	PERSON RESPONSIBLE FOR MONITORING	PROJECTED DATE OF COMPLETION	DOCUMENTS OR FORMS
Program staff will contact Early Childhood Intervention (ECI) agencies, Child Find, WIC, local health clinics, private rehab centers, LEA's and any other community organizations that may have contact with families that have 3-4 year old children with disabilities and provide them with information on the Head Start Program. Mail outreach letters to agencies.	Special Services Director Transition Director Family Services Director Center Manager Support Services Staff	Compliance/Monitoring Director Special Services Director/Staff Transition Director Education Area Director Center Manager	Ongoing	-Community Assessment -Child Find Meeting Agenda -LEA Child Find Flyers / and Clinics -Community Assessment -Head Start Child Find brochures -Head Start disability banner -Newsletter
Program staff will participate in community Child Find efforts with LEA's, ECI's and Region One ESC for recruitment purposes. Contact Child Find Specialist and ECI Specialist as a recruitment effort.	Special Services Director/Staff Center Manager Support Services Staff All Head Start Field Staff	Monitoring/Compliance Director Special Services Director/Staff Education Area Director Center Manager	Ongoing	

HIDALGO COUNTY HEAD START PROGRAM
Special Services Program Plan
2017-2018

Performance Standard: 45 CFR Part 1302.13 Cont…

Goal: The Hidalgo County Head Start Program will establish and maintain an outreach and recruitment process to actively locate and recruit children with disabilities/significant disabilities.

Objective: To secure enrollment opportunities for children with disabilities; provide training for staff regarding disability regulations 45 CFR part 84, nondiscrimination on the basis of a disability/ADA; coordinate/collaborate recruitment efforts with LEA, ECI's, and Child Find.

TASK TO BE ACCOMPLISHED	PERSON RESPONSIBLE	PERSON RESPONSIBLE FOR MONITORING	PROJECTED DATE OF COMPLETION	DOCUMENTS OR FORMS
Program staff will distribute Head Start Child Find brochures solely for the purpose of recruiting children with disabilities.	Special Services Director Transition Director Family Services Director Center Manager Support Services Staff	Monitoring/Compliance Director Special Services Director/Staff Transition Director Education Area Director Center Manager	Ongoing	-Community Assessment -Child Find meeting agendas -LEA Child Find flyers/ and Clinics -Community Assessment -Head Start Child Find brochures -HS disability banner -Newsletter
Program will develop and distribute Public Service Announcements (PSA'S) for TV, radio, and newspaper, post flyers, and issue brochures on Head Start inviting families of children 3-4 with disabilities as well as those with significant disabilities to apply.	Special Services Director Center Manager Support Services Staff All Head Start Field Staff	Monitoring Director Special Services Director/Staff Education Area Director Center Manager	Ongoing	

HIDALGO COUNTY HEAD START PROGRAM
Special Services Program Plan
2017-2018

Performance Standard: 45CFR 1302.14 (a) (1), (4), (b) (1-2)

Goal: The Hidalgo County Head Start Program will establish and maintain an outreach and recruitment process to actively locate and recruit children with disabilities.

Objective: Will assure non-discrimination of children with disabilities if parents wish to enroll; meet age/income requirements; and when Head Start is the appropriate placement. After 10% enrollment is met, children will compete equally.

TASK TO BE ACCOMPLISHED	PERSON RESPONSIBLE	PERSON RESPONSIBLE FOR MONITORING	PROJECTED DATE OF COMPLETION	DOCUMENTS OR FORMS
All age appropriate children with disabilities, including those previously identified, regardless of disability will be granted equal opportunity in applying, if Head Start is the proper placement. Children will be placed on a waiting list after the 10% is met unless sots are still available; all will compete equally; children must be age and income eligible.	Special Services Director Family Services Director Center Manager Support Services Staff	Monitoring/Compliance Director Special Services Director/Staff Education Area Director Center Manager Support Service Staff	Ongoing	-Enrollment applications -Community Assessment -ECI/LEA documentation -PIR -Waitlist
The Head Start Program will ensure that a minimum of 10% of the total funded enrollment slots be for children who are evaluated and diagnosed with disabilities as per IDEA and who meet the Head Start eligibility criteria. The Head Start program will coordinate and collaborate with LEA's for evaluation and diagnosis and to provide services to children in the least restrictive environment in accordance with the Individual Education Plan (IEP)	Special Services Director Family Services Director Center Manager Support Services Staff	Monitoring/Compliance Director Special Services Director/Staff Family Services Director/Staff Center Manager	Ongoing	-LEA documentation -Enrollment applications PROMIS Reports

HIDALGO COUNTY HEAD START PROGRAM
Special Services Program Plan
2017-2018

Performance Standard: 45 CFR 1302.17 (b) (2) (i-iii)

Goal: Hidalgo County Head Start Program will identify through a systematic process and meet eligibility criteria for all identified disabilities to ensure services are adequately and professionally provided to children with special needs.

Objective: Ensure eligibility criteria is met when classifying children with a challenging behavioral disorders.

TASK TO BE ACCOMPLISHED	PERSON RESPONSIBLE	PERSON RESPONSIBLE FOR MONITORING	PROJECTED DATE OF COMPLETION	DOCUMENTS OR FORMS
Program staff will hold staffings with parents to review the child's unique needs using classroom observation reports, Mental Health Consultants as well as any Drs. Reports.	Center Manager Support Service Staff Teacher	Monitoring/Compliance Director Special Service Director/Staff Education Area Director	As needed	-Notice of Staffing -Staffing Notes -Classroom Observation -DR./Consultant Reports -Information on file
Program staff will follow up on child's challenging behavior by utilizing the Mental Health process and positive Behavior support, which includes the developmental Behavioral Management Plans.	Mental Health Counselor Center Manager Support Service Staff Teacher	Monitoring/Compliance Director Special Services Director/Staff Education Area Director Mental Health Counselor	Ongoing	-Ongoing Monitoring
Program staff will refer child to LEA for a Full Individual Evaluation (FIE) for possible identification and services with LEA	Special Services Director Center Manager Support Service Staff Teacher Special Education Staff	Monitoring/Compliance Director Special Services Director/Staff Education Area Director Center Manager Support Service Staff	Ongoing	-Referral Packet -Evaluation Report -ARD/IEP

HIDALGO COUNTY HEAD START PROGRAM
Special Services Program Plan
2017-2018

Performance Standard: 45 CFR 1302.30

Goal: Provide high quality education and child development services to children including those with disabilities, which will promote children's cognitive, social and emotional growth for school success.

Objective: The Program will establish goals for all children including those with disabilities by reviewing, results/information obtained from teacher observation, developmental screening/assessments and parent information in order for children to be successful.

TASK TO BE ACCOMPLISHED	PERSON RESPONSIBLE	PERSON RESPONSIBLE FOR MONITORING	PROJECTED DATE OF COMPLETION	DOCUMENTS OR FORMS
All children will complete developmental screenings and assessments, in addition to any other required screenings instruments.	Education Area Director Special Services Director Center Manager Teacher	Monitoring/Compliance Director Education Area Director Special Services Director/Staff Support Service Staff	Ongoing	-Developmental Screening/Assessment -DECA -Weekly Plan -CIP -IEP -6 weeks (LEA) progress report -IEP Progress Reports (Head Start)
Researched based screenings/assessments will be completed on all children within 45 days of enrollment	Education Area Director Special Services Director Center Manager Teacher	Monitoring/Compliance Director Education Area Director Special Services Director/Staff Support Service Staff	Ongoing	

HIDALGO COUNTY HEAD START PROGRAM
Special Services Program Plan
2017-2018

Performance Standard: CFR 1302.31 (2) (d)

Goal: The Hidalgo County Head Start Program will include children with disabilities in the full range of services to all its children and ensure that all services in the IEP are provided.

Objective: To assist with departmental area Coordination in the provision of services to children with disabilities, and their families. Link children with disabilities and the family to community resources. Make adaptations for small and large group activities to help children benefits from program services.

TASK TO BE ACCOMPLISHED	PERSON RESPONSIBLE	PERSON RESPONSIBLE FOR MONITORING	PROJECTED DATE OF COMPLETION	DOCUMENTS OR FORMS
Accommodations for children with disabilities will include assigning volunteers, and/or a disability classroom assistant (DCA) to provide extra support/instruction in small and large group activities; provide adequate special utensils, materials, equipment, facility accessibility, and anything else required by the child as per IEP. Provide Assistive Technology as required by the child's IEP. Assure facility accessibility for any individual with a disability, and program staff will provide parents with information on various Support Groups in the community.	Special Services Director Center Manager Support Services Staff Teacher Field Operations Director	Monitoring/Compliance Director Special Services Director/Staff Family Services Director Center Manager Support Services Staff	Ongoing	-Progress Reports on file -Ongoing Monitoring -Requisitions and Purchase Orders for Special material purchases. -ADA accommodations -DCA assignments -Support Group List

HIDALGO COUNTY HEAD START PROGRAM
Special Services Program Plan
2017-2018

Performance Standard: 45 CFR Part 1302.31 (2) (e) (2)

Goal: The Hidalgo County Head Start Program will establish a process so that the nutritional needs of all children are met.

Objective: To include activities to assist children with disabilities; participate in meals with classmates.

TASK TO BE ACCOMPLISHED	PERSON RESPONSIBLE	PERSON RESPONSIBLE FOR MONITORING	PROJECTED DATE OF COMPLETION	DOCUMENTS OR FORMS
Staff will encourage children with special needs to participate in meal/snack time interactions and weekly nutrition activities.	Special Services Director Nutrition Director Center Manager Teacher	Monitoring/Compliance Director Special Services Director /Staff Education Area Director Center Manager	Ongoing	-Observation Notes -Teacher Weekly Plan reflects nutrition activity -Special Diet menus

HIDALGO COUNTY HEAD START PROGRAM
Special Services Program Plan
2017-2018

Performance Standards: 45 CFR Part 1302.33 (a) (1-2)

Goal: The Hidalgo County Head Start Program will identify children in need of further evaluation within the first 45 calendar days of enrollment.

Objective: Complete developmental screenings / assessments on all Head Start children within 45 calendar days of enrollment. In behavioral motor, language, Social, cognition, and emotional skills. Notify parents of screening/assessment results and provide parents with information on developmental milestones and the 7 Domains of Learning. Provide ongoing screening/assessment for those children who may require further assessments to determine a disability.

TASK TO BE ACCOMPLISHED	PERSON RESPONSIBLE	PERSON RESPONSIBLE FOR MONITORING	PROJECTED DATE OF COMPLETION	DOCUMENTS OR FORMS
With Parental Consent each child will be administered a standardized developmental researched based screening and assessment. The LAP-D and DECA as well as any other required screening instrument for 3-4 year old children.	Center Manager Support Services Staff Teacher LEA Special Education Staff Special Services Director	Monitoring/Compliance Dir. Special Service Director/Staff Health Services Director Education Area Director Mental Health Counselor	Forty-five (45) days after enrollment LEA Ongoing	-Copy of assessment screenings -Ongoing monitoring -LEA documentation - Disability brochures -IEP progress reports -Six weeks progress reports -IDEA/ADA brochures
The Language sections of the LAP-D will be used in identifying children with suspected language problems, which may warrant a referral to the LEA for a formal evaluation. LEA may administer screenings as needed upon referral.	Center Manager Support Services Staff Teacher LEA Special Education Staff Special Services Director	Monitoring/Compliance Dir. Center Manager Education Area Director Special Services Director/Staff	Ongoing	

HIDALGO COUNTY HEAD START PROGRAM
Special Services Program Plan
2017-2018

Performance Standard: 45 CFR Part 1302.33 (3) (i-ii)

Goal: The Hidalgo County Head Start program will establish a diagnostic process to ensure children with disabilities receive appropriate services through referral to LEA.

Objective: Refer to the LEA for evaluation as soon as the need is evident. More than one test tool will utilized; address cultural/linguistic differences; necessary accommodations (sensory, manual, communication skills); evaluations will be conducted by licensed/certified personnel; Parental consent will be secured prior evaluation; validated test tools are utilized.

TASK TO BE ACCOMPLISHED	PERSON RESPONSIBLE	PERSON RESPONSIBLE FOR MONITORING	PROJECTED DATE OF COMPLETION	DOCUMENTS OR FORMS
Children who require further specialized assessments to determine whether they have a disability will be referred to LEA for appropriate evaluations/assessments which will assess all areas related to the suspected disability. These cases will count towards 10%, if qualified. Staff will secure Parental Consent.	Special Services Director Support Services Staff Center Manager Parent LEA	Monitoring/Compliance Dir. Special Service Director/Staff Education Director LEA	Ongoing	-Head Start referral -LEA referral -Ongoing monitoring -Data collection -Parental consents -Agency to Agency Referral
Parents will be provided with support group information to assist them in understanding their child's disability.	Special Services Director Center Manager	Monitoring/Compliance Dir. Special Services Director	Ongoing	-Support Group Lists
Staff will provide parents with information on other community organizations who sponsor conferences, workshops, and trainings which allow parents to make connections with other families and have a better understanding of the process.	Special Services Director/Staff Transition Director Center Manager Support Services Staff	Monitoring/Compliance Dir. Special Services Dir/Staff	Ongoing	-Event Flyers -Event Registration

HIDALGO COUNTY HEAD START PROGRAM
Special Services Program Plan
2017-2018

Performance Standard: 45 CFR Part 1302.33 (4)

Goal: The Hidalgo County Head Start Program will establish a diagnostic process so children with disabilities receive appropriate services through referral to LEA.

Objective: Eligibility will be determined using a multi-disciplinary team approach by LEA. These eligible cases will be counted towards the 10%.

TASK TO BE ACCOMPLISHED	PERSON RESPONSIBLE	PERSON RESPONSIBLE FOR MONITORING	PROJECTED DATE OF COMPLETION	DOCUMENTS OR FORMS
A multi-disciplinary team approach will be utilized for children evaluated by LEA to determine eligibility for disability services upon completion of the evaluation. To Include the Parent, Head Start Teacher and Case Manager (SSA). If eligible services will be provided by a certified licensed specialist in the area of need.	Special Services Director Support Services Staff Center Manager Teacher LEA Specialist	Monitoring/Compliance Dir. Special Services Director Center Manager Education Director	Ongoing	-Referral -ARD/IEP minutes -PIR -Head Start Treatment/Evaluation -Consent Forms -Parent Transportation Consent Form -Therapy Sign In Forms
Services will be provided on site at center or at the public school. Head Start will provide transportation for services with parental consent.	Special Services Director Support Services Staff Center Manager Teacher LEA Specialist	Monitoring/Compliance Dir. Special Services Director Center Manager Education Director	Ongoing	

HIDALGO COUNTY HEAD START PROGRAM
Special Services Program Plan
2017-2018

Performance Standard: 45 CFR Part 1302.33 (5) (i-ii), (A-B)

Goal: The Hidalgo County Head Start Program will establish a diagnostic process so children with suspected disabilities receive appropriate referral/services through other agencies.

Objective: Assist parent in arranging for evaluation/services when child does not met IDEA eligibility a multi-disciplinary team approach will be utilized.

.

TASK TO BE ACCOMPLISHED	PERSON RESPONSIBLE	PERSON RESPONSIBLE FOR MONITORING	PROJECTED DATE OF COMPLETION	DOCUMENTS OR FORMS
If LEA determines a child is not eligible for Special Education Services, the program will assist the parents in arranging for evaluation/services through other resources to address the child's needs. The identified case will be monitored. Follow up will take place.	Special Services Director Center Manager Support Services Assistant	Monitoring/Compliance Dir. Special Services Director/Staff Center Manager	Ongoing	-Monthly follow up -Rehab evaluation report
Funds will be assigned to ensure services for children with disabilities, Medicaid, health insurance, etc... will be used before Head Start funds are utilized.	Assistant Program Director Finance Director	Executive Director Assistant Program Director Finance Director	Beginning of Fiscal Yr.	-Monthly budget reports -PIR

HIDALGO COUNTY HEAD START PROGRAM
Special Services Program Plan
2017-2018

Performance Standard: 45 CFR Part 1302.33 (c) (1)

Goal: Hidalgo County Head Start will include children with disabilities and their families in the full range of services provided to all children.

Objective: Assure that Special education and related services are provided under the supervision of personal meeting state license requirements/qualifications.

TASK TO BE ACCOMPLISHED	PERSON RESPONSIBLE	PERSON RESPONSIBLE FOR MONITORING	PROJECTED DATE OF COMPLETION	DOCUMENTS OR FORMS
Program will ensure that the Special Education staff is certified through the Texas Education Agency (TEA) and meet state licensure qualifications. Program staff will secure copies of credentials for each staff to have on file.	Special Services Director LEA Special Education Director Human Resources Director	Monitoring/Compliance Director Special Services Director LEA Special Education Director	Ongoing	-Certification and Licensure on file with LEA -MOU on file

HIDALGO COUNTY HEAD START PROGRAM
Special Services Program Plan
2017-2018

Performance Standard: 45 CFR Part 1302.33 (c) (2)

Goal: The Hidalgo County Head Start program will establish a diagnostic process to ensure children with disabilities receive appropriate services through referral to LEA.

Objective: Refer to the LEA for evaluation as soon as the need is evident. When a child is not eligible for services, Head Start will arrange for an evaluation utilizing a multi-disciplinary team approach through other resources. More than one test tool will utilized; address cultural/linguistic differences; necessary accommodations (sensory, manual, communication skills); evaluations will be conducted by licensed/certified personnel; Parental consent will be secured prior evaluation; validated test tools are utilized.

TASK TO BE ACCOMPLISHED	PERSON RESPONSIBLE	PERSON RESPONSIBLE FOR MONITORING	PROJECTED DATE OF COMPLETION	DOCUMENTS OR FORMS
Support Services Staff will ensure that children are allowed that appropriate time to rule out cultural linguistic differences, socio-economic factors, in an appropriate educational environment to determine whether the referral to LEA is warranted. LEA will consider above mentioned factors when evaluating child.	Special Services Director Center Manager Support Services Staff Parent LEA	Monitoring/Compliance Dir. Special Services Staff Education Director LEA	Ongoing	-Teacher Notes -Monthly follow up notes -Self-Assessment -LEA Referrals -Parental consents for evaluation -Referral training
The LEA will continue to be actively involved in training Head Start Center Manager/Support Service Staff on the referral process, and cultural linguistic differences.	Special Services Director Support Services Staff Center Manager LEA	Monitoring/Compliance Dir. Special Services Staff Education Director Center Manager Support Services Staff LEA	Ongoing	-Training agenda -Training sign in -Training hand outs

HIDALGO COUNTY HEAD START PROGRAM
Special Services Program Plan
2017-2018

Performance Standard: 45 CFR Part 1302.34 (b) (4-5)

Goal: Hidalgo County Head Start will allow for parent and family engagement throughout the disability effort to meet the family's needs.

Objective: Provide opportunity for parents to observe large and small group and individual activities.

TASK TO BE ACCOMPLISHED	PERSON RESPONSIBLE	PERSON RESPONSIBLE FOR MONITORING	PROJECTED DATE OF COMPLETION	DOCUMENTS OR FORMS
Staff will encourage parent and family engagement by providing the opportunity to observe large and small group and individual activities to include IEP activities Staff will encourage parents to attend ARD meetings, and volunteer in the classroom. This will assist in the development of families as leaders and teachers of their children.	Center Manager Support Services Staff Teacher Special Services Director Family Services Director	Monitoring/Compliance Dir. Special Service Director Education Director Center Manager Support Services Staff	Ongoing	-Volunteer File -Self -Assessment -ARD/IEP Minutes -IEP

HIDALGO COUNTY HEAD START PROGRAM
Special Services Program Plan
2017-2018

Performance Standard: 45 CFR Part 1302.40 (a-b)

Goal: The Hidalgo County Head Start Program will develop a Special Services Plan providing strategies for meeting the special needs of children with disabilities and their families.

Objective: The purpose of the Special Services Plan is to assure that all content areas of Head Start are appropriately involved in the integration of children with disabilities and their families and that resources are used efficiently.

TASK TO BE ACCOMPLISHED	PERSON RESPONSIBLE	PERSON RESPONSIBLE FOR MONITORING	PROJECTED DATE OF COMPLETION	DOCUMENTS OR FORMS
The plan will be updated annually and presented to Policy Council for approval. The Health Advisory Committee provides input, allowing for parent and family engagement. The Plan outlines how the program will provide services for all children.	Special Services Director Health Advisory Committee	Executive Director Monitoring/Compliance Dir. Special Services Director Policy Council	May 2017	-Plan accessible to staff/parents -Copy at Head Start Centers
Department staff will maintain open communication with all content areas regarding services being provided or required for children with disabilities and their families. A link and refer system is maintained in order to assist families in need of services.	Special Services Director/Staff Family Services Director Center Manager Support Service Staff	Monitoring/Compliance Dir. Special Services Director/Staff Center Manager Support Service Staff	Ongoing	-Resource Directory on file -Sign in and the Agenda of Network Meeting -MOU's in file

HIDALGO COUNTY HEAD START PROGRAM
Special Services Program Plan
2017-2018

Performance Standard: 45 CFR Part 1302.42 (d) (1-2)

Goal: Hidalgo County Head Start will include children with disabilities and their families in the full range of services provided to all children enrolled in Head Start and ensure that all services on the IEP are provided.

Objective: Arrange for, provide, or procure services which may include, but are not limited to special education and related services (audiology, physical and occupational therapy, speech therapy, psychological services, transportation and assistive technology).

TASK TO BE ACCOMPLISHED	PERSON RESPONSIBLE	PERSON RESPONSIBLE FOR MONITORING	PROJECTED DATE OF COMPLETION	DOCUMENTS OR FORMS
In conjunction with Family Services and other content areas, a Link and Refer Families system will be utilized in order to assure that needed services, to include special education and related services are addressed and delivered in a timely manner.	Health Services Director Special Services Director Family Services Director Center Manager Support Services Staff	Monitoring/Compliance Dir. Family Services Director Special Services Director Health Services Director Center Manager	Ongoing	-Referral Log -Follow-up -Progress reports -Self-Assessment -Ongoing Monitoring
In conjunction with Head Start Education content area, department staff will secure lists from center managers on any children who failed the developmental screening instrument for follow-up purposes in an attempt to avoid missing any child in need of further evaluation.	Special Services Director Education Director Center Manager Support Services Staff	Monitoring/Compliance Dir. Special Services Director Education Area Director Center Manager	Ongoing	-Lap-D -PROMIS Reports -Ongoing Monitoring

HIDALGO COUNTY HEAD START PROGRAM
Special Services Program Plan
2017-2018

Performance Standard: 45 CFR Part 1302.42 (e) (1-2), 1302.47 (e) (6) (i)

Goal: The Hidalgo County Head Start Program will enroll children with disabilities, who may be in need of personalized services.

Objective: Will assure non-discrimination of children with disabilities. Will ensure that no child is denied enrollment due to need for personalized services.

TASK TO BE ACCOMPLISHED	PERSON RESPONSIBLE	PERSON RESPONSIBLE FOR MONITORING	PROJECTED DATE OF COMPLETION	DOCUMENT OR FORMS
When there is a need for personalized services such as diapering, the program will provide training and materials for staff to assist the children with disabilities at no cost to the family.	Special Services Director/Staff Finance Director Teacher Teacher Assistant Disability Classroom Assistant	Monitoring/Compliance Dir. Special Services Director/Staff Center Manager	Ongoing	-Requisitions/PO's for diapering supplies -Request for equipment materials. -Diaper Change Log

HIDALGO COUNTY HEAD START PROGRAM
Special Services Program Plan
2017-2018

Performance Standard: 45 CFR Part 1302.44 (a) (1)

Goal: The Hidalgo County Head Start Program will establish a process to ensure that staff and the Content Area Directors work together to ensure that provisions for the nutrition needs of children are meet.

Objective: Consult with physical, occupational, and speech therapists and dieticians on ways to assist the staff and parents on problems of chewing, swallowing and feeding for children with significant disabilities. Include activities to assist children with disabilities; participate in meals with classmates; address prevention with a nutrition basis.

TASK TO BE ACCOMPLISHED	PERSON RESPONSIBLE	PERSON RESPONSIBLE FOR MONITORING	PROJECTED DATE OF COMPLETION	DOCUMENTS OR FORMS
Staff will hold staffing's to ensure that children with special needs will be identified for appropriate delivery of services as a means of prevention.	Center Managers Support Services Staff Special Services Director Nutrition Director	Monitoring/Compliance Dir. Content Area Directors Mental Health Counselor Special Services Director/Staff	Ongoing	-Notice of staffing -Staffing notes
Nutrition Department will provide special diets for children with chewing, swallowing and feeding problems. Verify on orders as needed.	Special Services Director Nutrition Director Center Manager	Monitoring/Compliance Dir. Special Services Director Content Area Directors Center Manager	Ongoing	-Classroom Observation Notes -Teacher Weekly plan reflects nutrition activities
Department staff will schedule trainings/workshops by the appropriate professionals such as SLP, OT, and PT on specific nutrition needs for children with disabilities for parents/staff to ensure that proper procedures are learned and followed when caring for children with special needs.	Special Services Director Health Director Nutrition Director Center Manager Teacher	Monitoring/Compliance Dir. Special Services Director Education Director Center Manager	Ongoing	-Cameras -Special Diet Menus -Training Agendas -Sign In's
Classroom staff will encourage children with special needs to participate in meal/snack time interactions and weekly nutrition activities	Special Services Director Support Services Staff Teachers Center Manager	Monitoring/Compliance Dir. Special Service Director Center Manager	Ongoing	-Pre-Service training topics -Nutrition training agendas

HIDALGO COUNTY HEAD START PROGRAM
Special Services Program Plan
2017-2018

Performance Standard: 45 CFR Part 1302.47 (b)

Goal: The Hidalgo County Head Start Program includes children with disabilities and their families in the full range of services provided to all Head Start children so that all services on the IEP are provided.

Objective: Arrange for options with LEA to meet the needs of each child to include joint placement, shared services, or shared personnel and strategies to check that special needs are met.

TASK TO BE ACCOMPLISHED	PERSON RESPONSIBLE	PERSON RESPONSIBLE FOR MONITORING	PROJECTED DATE OF COMPLETION	DOCUMENTS OR FORMS
Strategies used will ensure that special needs will be met by using substitutes, volunteers and disability classroom assistants who provide extra instruction and assistance for children with disabilities. Also utilize special equipment, materials, transportation, and sign language interpreters.	Special Services Director Education Director Center Manager Support Services Staff Teacher	Monitoring/Compliance Dir. Special Services Dir./Staff Education Director	Ongoing	-Progress report -ARD Minutes -On-going Monitoring -Monthly follow up/notes -Progress notes

HIDALGO COUNTY HEAD START PROGRAM
Special Services Program Plan
2017-2018

Performance Standard: 45 CFR Part 1302.47 (7) (IV)

Goal: The Hidalgo County Head Start Program will have procedures established that allow for the full and efficient implementation of the disability content area according to the Performance Standards.

Objective: Ensure that all medications are properly administered and that parental consents are secured; that all medications dispensed are properly recorded and reviewed with parents; record any changes in child's behavior and share with staff, parents and physician; store, label and lock all medications. This will allow for parent and family engagement.

TASK TO BE ACCOMPLISHED	PERSON RESPONSIBLE	PERSON RESPONSIBLE FOR MONITORING	PROJECTED DATE OF COMPLETION	DOCUMENTS OR FORMS
Staff will educate teachers and parent/guardian on the proper administration of medication, and will dialogue with families regarding the medication.	Health Director Center Manager Support Services Staff Teacher	Monitoring/Compliance Dir. Health Director Special Services Director Education Director Center Manager	Ongoing	-Training agendas -Medication logs
Staff will administer, handle and store all medication in accordance with program policy and procedures which include doctor's instructions, properly labeled medication by pharmacist, parent consent to administer medication, record keeping including changes in child's behavior, etc. (refer to policy and procedure on medication administration in the Health procedures manual). Parent and family engagement practices will occur.	Health Director Center Manager Support Services Staff Teacher	Monitoring/Compliance Dir. Health Director Special Services Director Education Director Center Manager	Ongoing	-Documentation notes -Medications -Policy/forms/logs -Parent Consent

HIDALGO COUNTY HEAD START PROGRAM
Special Services Program Plan
2017-2018

Performance Standard: 45 CFR Part 1302.52 (b) (c) (1-4)

Goal: The Hidalgo County Head Start Program will allow for parent and family engagement throughout the disability effort and meet the family's needs when relating to joint transition training and planning.

Objective: Assist in the transition of children entering Head Start and from Head Start to public school; to be able to identify children's needs; attempt to prevent disabilities among younger siblings; build parent confidence, skill and knowledge to advocate for children's special needs.

TASK TO BE ACCOMPLISHED	PERSON RESPONSIBLE	PERSON RESPONSIBLE FOR MONITORING	PROJECTED DATE OF COMPLETION	DOCUMENTS OR FORMS
A Family Partnership Agreement (FPA) will be utilized to assist families in identifying basic life support needs to include siblings needs related to disabilities. Head Start will link and refer families to community agencies in order to assist them in receiving services.	Family Services Director Center Manager Support Services Staff Teacher	Monitoring/Compliance Dir. Family Services Director Special Services Director/Staff Education Area Director Center Manager	-Ongoing	-FPA -Follow- up notes -PIR -Referral -Resource Directory
A resource directory and Parent Handbook is provided at the 1st parent orientation meeting for information on parent education programs. Parents and staff will be provided opportunity to learn about first aid, principals of preventative health, safety measures and any information on disabilities that may assist parents with their family's disability needs, thus promoting family well-being.	Transition Director Family Services Director Health Services Director Center Manager Support Services Staff Teacher	Monitoring/Compliance Dir. Transition Director Family Services Director Special Services Director Center Manager	-Ongoing	-Training agendas/sign-in -Flyers -Brochures -ARD -Parent Committee trainings on IDEA /ADA/LEA Referrals/ transition

HIDALGO COUNTY HEAD START PROGRAM
Special Services Program Plan
2017-2018

Performance Standard: CFR Part 1302.53 (a) (2) (i-ii), 1302.53 (b) (1)

Goal: The Hidalgo County Head Start Program will include children with disabilities and their families in the full range of services provided to all Head Start children and ensure that all services on the IEP are provided.

Objective: Memorandum of Understanding (MOU) will be developed to address, Child Find, joint staff and parent education training, link and refer to Sp. Ed., IEP meetings, placement , joint transition training and planning, resource sharing, and any other jointly agreed upon item.

TASK TO BE ACCOMPLISHED	PERSON RESPONSIBLE	PERSON RESPONSIBLE FOR MONITORING	PROJECTED DATE OF COMPLETION	DOCUMENTS OR FORMS
Program staff will secure Memorandum of Understanding (MOU) with LEA and other agencies to provide services for children with disabilities and families.	Special Services Director Transition /Community Partnership Director	Monitoring/Compliance Dir. Special Services Director Transition /Community Partnership Director	May-August 2017	-Agreements on file -PIR
Program staff will attend Child Find meetings, workshops, fairs for recruitment purposes. Special Services Director and or Disability Coordinator will participate on Child Find Advisory Committee with Region One ESC.	Special Services Director Disability Coordinator	Special Services Director Special Services Staff	As scheduled by LEA's and Region One ESC.	-Agendas information on file
Department staff will coordinate and collaborate in resource sharing and joint training with LEA.	Special Services Staff Center Manager Support Services Staff	Monitoring/Compliance Dir. Special Services Dir./Staff Education Director Center Manager	-Ongoing	-Referral training -

HIDALGO COUNTY HEAD START PROGRAM
Special Services Program Plan
2017-2018

Performance standard: 45 CFR Part 1302.60

Goal: The Hidalgo County Head Start Program will develop a Special Services Plan which outlines strategies for allowing full participation of all children with disabilities and their families.

Objective: To assure that all content areas of Head Start are appropriately involved in the integration of children with disabilities and their families and that resources are used efficiently.

TASK TO BE ACCOMPLISHED	PERSON RESPONSIBLE	PERSON RESPONSIBLE FOR MONITORING	PROJECTED DATE OF COMPLETION	DOCUMENTS OR FORMS
Although children receiving medical services from private rehabilitation providers will no longer be counted towards the 10%, services will continue with the private providers, outside Head Start hours. Only children evaluated and diagnosed by LEA will be counted towards the 10%.	Parents Special Services Staff Center Manager Support Services Staff	Special Services Staff Center Manager Support Services Staff Classroom Staff	Ongoing	Rehab. Reports Monthly follow-ups Rosters
The plan will be updated annually and presented to Policy Council for approval. The Health Advisory Committee will provide input, allowing for parent and family engagement.	Special Services Director Health Advisory Comm.	Monitoring/Compliance Dir. Special Services Director/Staff Policy Council	May 2017	-Plan accessible to staff/parents -Copy at Head Start Centers

HIDALGO COUNTY HEAD START PROGRAM
Special Services Program Plan
2017-2018

Performance Standards: 45 CFR Part 1302.61 (a)

Goal: The Hidalgo County Head Start Program will enroll a minimum of 369, (10%) of the total funded enrollment, children with disabilities as diagnosed by LEA. Only LEA diagnosed children will be counted towards 10%.

Objective: Will assure non-discrimination of children with disabilities in the selection process in meeting 10% provided they meet age and income requirements. After 10% enrollment is met, children will compete equally. Will observe applicable state laws regarding immunizations in enrollment process. Will ensure that no child is denied enrollment due to severity of disability, staff attitudes, facility inaccessibility, staff unfamiliarity with disabling conditions, nor need for personalized services or specialized equipment. Children previously identified as having a disability must not be excluded in the recruitment process.

TASK TO BE ACCOMPLISHED	PERSON RESPONSIBLE	PERSON RESPONSIBLE FOR MONITORING	PROJECTED DATE OF COMPLETION	DOCUMENT OR FORMS
All age appropriate children with disabilities; to include those previously identified, (regardless of severity) will be granted equal opportunity in applying for enrollment, if Head Start is the appropriate placement. Children will be placed on a waiting list after 10% is met unless slots are still available; all will compete equally; all must be age and income eligible. Exception: ECI children identified by LEA with a diagnosis will be enrolled upon turning 3 years old, if there is a slot available.	Family Services Director Special Services Director Center Manager Support Services Staff	Monitoring/Compliance Dir. Special Services Director/Staff Family Services Director Education Area Director Center Manager	Ongoing	-Enrollment application -Waiting list -Community Assessment -PIR -ECI documentation

HIDALGO COUNTY HEAD START PROGRAM
Special Services Program Plan
2017-2018

Performance Standard: CFR Part 1302.61 (a)

Goal: The Hidalgo County Head Start Program will include children with disabilities and their families in the full range of services provided to all Head Start children and ensure that all services on the IEP are provided.

Objective: To assist with departmental area coordination in the provision of services to children with disabilities and their families. To link children with disabilities and families to community resources available to provide special education and related services. Make needed adaptations for small and large group activities, to help the child benefit fully from the program.

TASK TO BE ACCOMPLISHED	PERSON RESPONSIBLE	PERSON RESPONSIBLE FOR MONITORING	PROJECTED DATE OF COMPLETION	DOCUMENTS OR FORMS
Accommodations for children with disabilities will include assigning volunteers, and/or a disability classroom assistant (DCA) to provide extra instruction in small and large group activities; provide adequate special utensils, materials, equipment, facility accessibility, and anything else required by the child as per IEP. Provide Assistive Technology as required by the child's IEP. Assure facility accessibility for any individual with a disability.	Special Services Dir./Staff Field Operations Director Center Manager Support Services Staff Teacher	Monitoring/Compliance Special Services Director Family Services Director Center Manager	Ongoing	-All forms and progress reports on file. -Ongoing-monitoring -Requisitions and PO's on special material purchases/ADA accommodations -DCA observation notes

HIDALGO COUNTY HEAD START PROGRAM
Special Services Program Plan
2017-2018

Performance Standard: 45 CFR Part 1302.61 (a)

Goal: The Hidalgo County Head Start Program will allow for parent and family engagement throughout the disability effort and meet the family's needs when relating to joint transition training and planning.

Objective: Assist in the transition of children entering Head Start and from Head Start to public school. Provide opportunities to parents to observe large and small group and individual activities to include program activities as per IEP; inform parents of their rights under IDEA; inform parents of available resources (i.e. SSI, EPSDT); provide parents with support group information. Provide follow-up assistance and activities to reinforce program activities at home. Build parent confidence, skill and knowledge to advocate for their children's special needs.

TASK TO BE ACCOMPLISHED	PERSON RESPONSIBLE	PERSON RESPONSIBLE FOR MONITORING	PROJECTED DATE OF COMPLETION	DOCUMENTS OR FORMS
Program staff will provide parent with educational brochures on disabilities, federal and state laws and community resource directory, thus, assisting parents as learners.	Support Services Staff Center Manager Special Services Director	Special Services Director/Staff Transition Director Monitoring Director	Ongoing	-Resource Directory -Disability brochures -Flyers
Program staff will encourage parent and family engagement by providing opportunity to observe large and small and individual group activities to include activities as per IEP; when evaluating the program, by participating in the yearly Self-Assessment, to observe child's screening and assessments, to attend child's ARD meetings, to volunteer in the classroom and attend therapy sessions with their children when possible. This will assist the development of parents as leaders.	Special Services Director Family Services Director Center Manager Teacher	Monitoring/Compliance Dir. Special Services Director Center Manger Support Services Staff Education Area Director	Ongoing	-Self-Assessment -Volunteer file -Cameras -IEP -screening/ assessment

HIDALGO COUNTY HEAD START PROGRAM
Special Services Program Plan
2017-2018

Performance Standard: 45 CFR Part 1302.61(a)

Goal: The Hidalgo County Head Start Program includes children with disabilities and their families in the full range of services provided to all children enrolled in Head Start and ensure that all services on the IEP are provided.

Objective: Arrange for, provide, or procure services which may include, but are not limited to special education and related services (audiology, physical and occupational therapy, speech therapy, psychological services, transportation and assistive technology).

TASK TO BE ACCOMPLISHED	PERSON RESPONSIBLE	PERSON RESPONSIBLE FOR MONITORING	PROJECTED DATE OF COMPLETION	DOCUMENTS OR FORMS
Department staff in conjunction with Family Services staff and other content areas will utilize a Link and Refer Families system; in order to assure delivery of needed services, to include special education and related services are addressed and delivered in a timely manner. Referrals to LEA will be initiated accordingly.	Special Services Director Family Services Director Center Manager	Monitoring/Compliance Dir. Content Area Directors Center Manager Support Services Staff	Ongoing	-Referral log -Follow-up -Progress reports - Self-Assessment -Ongoing monitoring
Department staff in collaboration with the Education Department will secure lists from center managers on any child who failed the developmental screening instrument for follow-up purposes in an attempt to avoid missing any child in need of further evaluation.	Special Services Director Education Director Center Manager Support Service Staff	Monitoring/Compliance Dir. Special Services Dir./Staff Content Area Directors	Ongoing	-LAP-D -Child Assessment Screening Record -Ongoing Monitoring - PROMIS
Department staff will facilitate the dual enrollment of children with LEA and share DCA if needed/or as per IEP.	Special Services Dir./Staff Center Manager Support Services Staff	Monitoring/Compliance Dir. Special Services Dir./Staff Center Manager	Ongoing	

HIDALGO COUNTY HEAD START PROGRAM
Special Services Program Plan
2017-2018

Performance Standard: 45 CFR Part 1302.61 (b)

Goal: The Hidalgo County Head Start Program will develop a Special Services Plan providing strategies for meeting the Special needs of children with disabilities and their families.

Objective: The purpose of the special services plan is to assure that all the content areas of Head Start are ensuring Parent and Family Engagement in the integration of children with disabilities and those resources are used efficiently. Maintain level of fiscal support to implement the plan and serve a minimum of 10% children with disabilities, to include children with significant disabilities, as diagnose by LEA and allow for expenditures such as salaries, evaluations , therapy services, transportation, special equipment/materials T/TA, facility accessibility etc. as needed.

TASK TO BE ACCOMPLISHED	PERSON RESPONSIBLE	PERSON RESPONSIBLE FOR MONITORING	PROJECTED DATE OF COMPLETION	DOCUMENTS OR FORMS
The Special Services budget will be prepared and reviewed by the Head Start Executive Director, Finance Director and the Special Services Director. An appropriate allotment of funds will be assigned to ensure services to children with disabilities. Non-Head Start funding such as Medicaid, health insurance, in-kind etc. will be used to the maximum feasible coverage before Head Start funds are utilized. The Community Assessment is considered when preparing the budget.	Assistant Program Director Finance Director Special Services director	Special Services Director Finance Director	Beginning to end of fiscal year	-Budget copy -Monthly budget reports -PIR -Community Assessment

HIDALGO COUNTY HEAD START PROGRAM
Special Services Program Plan
2017-2018

Performance Standard: 45 CFR Part 1302.61 (b), 1302.61 (c) (1) (i-v)

Goal: The Hidalgo County Head Start Program through LEA's, will develop IEP's that meet the needs of children with disabilities and enables them to be included fully in classroom activities.

Objective: Participate and provide input into the LEA IEP. When LEA develops the IEP a Head Start representative will attempt to attend IEP meeting to include teacher, parents, evaluator, interpreter for parents will be provide if needed. IEP's will be in parent's dominant language; encourage parents to attend IEP meeting; have meeting without parents if necessary; implement IEP soon after meeting. Monitor implementation of IEP's and child's progress. Encourage more interaction between classroom teachers and services providers.

TASK TO BE ACCOMPLISHED	PERSON RESPONSIBLE	PERSON RESPONSIBLE FOR MONITORING	PROJECTED DATE OF COMPLETION	DOCUMENTS OR FORMS
Department staff will collaborate with different content areas when monitoring the child's IEP as needed to ensure that every area of need is addressed (nutrition, mental health etc.) Children with disabilities will be included in the full range of activities within the child development program, while being served in the Head Start classroom by the Specialists.	Special Services Director Content Area Directors Center Manager Support Services Staff Teacher LEA	Monitoring/Compliance Dir. Support Services Dir./Staff Education Director Center Manager	Ongoing	-Reflect IEP objectives in weekly lesson plan -Cameras -Monthly follow-up
Program staff will encourage and facilitate interaction between teacher and service providers through IEP meetings, face-to-face contact, periodic telephone calls, classroom material sharing, child/parent home activities etc. Schedule visits and observe child during implementation of IEP in therapy session; LEA's and other special services providers usually accommodate such requests.	Special Services Director Center Manager Support Services Staff Teacher	Monitoring/Compliance Dir. Special Services Dir./Staff Education Director Center Manager	Ongoing	-Teacher notes -Take home activities -Cameras -Teacher/Parent Conference -IEP meeting

HIDALGO COUNTY HEAD START PROGRAM
Special Services Program Plan
2017-2018

Performance Standard: 45 CFR Part 1302.61 (c) (1) (i-v)

Goal: The Hidalgo County Head Start Program through LEA's, will develop IEP's that meet the needs of children with disabilities and enables them to be included fully in classroom activities.

Objective: Participate and provide input into the LEA IEP. When LEA develops the IEP a Head Start representative will attempt to attend IEP meeting to include teacher, parents, evaluator, interpreter for parents will be provide if needed. IEP's will be in parents dominant language; encourage parents to attend IEP meeting; have meeting without parents if necessary; implement IEP soon after meeting. Monitor implementation of IEP's and child's progress.

TASK TO BE ACCOMPLISHED	PERSON RESPONSIBLE	PERSON RESPONSIBLE FOR MONITORING	PROJECTED DATE OF COMPLETION	DOCUMENTS OR FORMS
The multi-disciplinary team will provide input into developing an appropriate IEP to meet the special needs of children.	Special Services Director Support Services Staff Center Manager Parent Teacher LEA Staff	Monitoring/Compliance Dir. Support Services Director/ Staff Education Director Center Manager	Within thirty (30) days of evaluation or ASAP	-ARD/IEP -PIR
Program staff will coordinate attendance of required Head Start Staff and parents when LEA schedule ARD/IEP meetings upon completion of assessment to discuss eligibility results.	Special Services Director Support Services Staff Center Manager Parent Teacher LEA Staff	Monitoring/Compliance Dir. Support Services Director Education Director LEA Staff	Ongoing	-Notice of ARD meeting -MOU
Program staff will continuously communicate with LEA to insure that Head Start staff is informed and will participate in scheduled IEP meetings.	Special Services Director Center Manager Support Services Staff Parent Teacher LEA Staff	Monitoring/Compliance Dir. Support Services Director Education Director LEA Staff	Ongoing	-Notice of ARD meeting -MOU

HIDALGO COUNTY HEAD START PROGRAM
Special Services Program Plan
2017-2018

Performance Standard: 45 CFR Part 1302.61 (c) (1) (i-v)

Goal: The Hidalgo County Head Start Program through LEA's, will develop IEP's that meet the needs of children with disabilities and enables them to be included fully in classroom.

Objective: Participate and provide input into the LEA IEP. When LEA develops the IEP a Head Start representative will attempt to attend IEP meeting to include teacher, parents, evaluator, interpreter for parents will be provide if needed. IEP's will be in parent's dominant language; encourage parents to attend IEP meeting; have meeting without parents if necessary; implement IEP soon after meeting. Monitor implementation of IEP's and child's progress.

TASK TO BE ACCOMPLISHED	PERSON RESPONSIBLE	PERSON RESPONSIBLE FOR MONITORING	PROJECTED DATE OF COMPLETION	DOCUMENTS OR FORMS
Child's unique needs, strengths and developmental potential will be documented through use of different sources-IEP progress reports, six weeks progress report, monthly follow-up, etc.	Special Services Director Center Manager Support Services Staff Teacher	Monitoring/Compliance Dir. Special Services Director/ Staff Education Director Center Manager	Ongoing	-IEP -Progress reports -Monthly follow-up -Teacher Notes
Interpreters at ARD/IEP meeting will be provided for Non-English speaking parents. Sign language interpreters will also be provided if needed.	Special Services Director Center Manager Support Services Staff	Monitoring/Compliance dir. Special Services Director/ Staff Education Director Center Manager	Ongoing	-Requisitions -Invoices -ARD/IEP -Monthly follow-up

HIDALGO COUNTY HEAD START PROGRAM
Special Services Program Plan
2017-2018

Performance Standard: 45 CFR Part 1302.61 (c) (2) (i-ii)

Goal: The Hidalgo County Head Start Program will ensure the smooth joint transition training and planning of children with disabilities into Head Start and from Head Start to the next placement.

Objective: In collaboration with Early Childhood Intervention (ECI) and LEA's, transition 3 year old Head Start eligible children with disabilities into Head Start. In collaboration with LEA's, transition children exiting Head Start into the public school. Provide parents and staff with information and training on the transition process.

TASK TO BE ACCOMPLISHED	PERSON RESPONSIBLE	PERSON RESPONSIBLE FOR MONITORING	PROJECTED DATE OF COMPLETION	DOCUMENTS OR FORMS
Program staff will maintain coordination and collaboration with ECI agencies and LEA's through the use of faxes, e-mail, telephone, mailings, and ARD meetings to ensure smooth joint transition and planning for children with possible disabilities to enroll in Head Start.	Transition Director Special Services Director Transition Specialist (ECI) LEA	Monitoring/Compliance Dir. Special Services Director Center Manager	Ongoing	-ECI documentation on file -Ongoing monitoring
Department staff will maintain documentation on ECI transition meetings attended by Transition Director and Support Services Staff	Special Services Director Transition Director Support Service Staff Center Manager	Monitoring/Compliance Dir. Special Services Director Center Manager	Ongoing	-ECI Notice of Transition Meeting -Transition paperwork -Ongoing monitoring
Department staff will maintain coordination and collaboration with LEA's regarding 3 & 4 year old Head Start eligible children with disabilities who may benefit from enrollment. Secure documentation on any type of communication	Special Services Director Support Services Staff Center Manager	Special Services Director Center Manager Monitoring Director	Ongoing	-ARD/IEP on file -Community Assessment -MOU

HIDALGO COUNTY HEAD START PROGRAM
Special Services Program Plan
2017-2018

Performance Standard: 45 CFR Part 1302.61 (c) (2) (i-ii)

Goal: The Hidalgo County Head Start Program will ensure the smooth joint transition training and planning of children with disabilities into Head Start and from Head Start to the next placement.

Objective: In collaboration with Early Childhood Intervention (ECI) and LEA's, transition 3 year old Head Start eligible children with disabilities into Head Start in collaboration with LEA's, transition children exiting Head Start into the public school. Provide parents and staff with information and training on the transition issues and process.

TASK TO BE ACCOMPLISHED	PERSON RESPONSIBLE	PERSON RESPONSIBLE FOR MONITORING	PROJECTED DATE OF COMPLETION	DOCUMENTS OR FORMS
Department will provide all LEA Special Education Departments with a list of children with disabilities exiting Head Start and transitioning to public school.	Special Services Director	Monitoring/Compliance Dir. Special Services Dir./Staff	June 2017	-Transition List to Sp. Ed. Dept.
Department staff will schedule training workshops or meetings in conjunction with LEA's, Region One ESC and ECI agencies to provide parents and Head Start Staff with information on joint transition training and planning on what procedures to follow.	Special Services Dir./Staff	Monitoring/Compliance Dir. Special Services Dir./Staff	Ongoing	-Transition meeting sign in on file. -Child Find advisory agenda -Training agenda/sign in on file
Department staff will provide transition letter to parents with information on Special Education contacts to ensure a smooth transition for their children with special needs.	Transition Director Center Manager	Monitoring/Compliance Dir. Transition Director Special Services Director	May 2017	-Parent transition letter on file.
Department staff will attend parent Committee Meetings and educate parents on IDE for children with disabilities transitioning to LEA.	Special Services Staff	Monitoring/Compliance Dir. Special Services Director	Aug.-May 2017-2018	-Agenda -Meeting sign-in

HIDALGO COUNTY HEAD START PROGRAM
Special Services Program Plan
2017-2018

Performance Standard: 45 CFR Part 1302.61 (c) (2) (i-ii)

Goal: The Hidalgo County Head Start Program will allow for parent and family engagement throughout the disability effort and meet the family's needs when relating to joint transition training and planning.

Objective: Assist the parents in the transition of children from Head Start to public school or other placement/options. Notify the school of the child's planned enrollment prior to date of enrollment.

TASK TO BE ACCOMPLISHED	PERSON RESPONSIBLE	PERSON RESPONSIBLE FOR MONITORING	PROJECTED DATE OF COMPLETION	DOCUMENTS OR FORMS
Department Staff will provide parents with information on special education services available in the public school system as a guide for parents on joint transition training and planning.	Transition Director Support Services Staff Center Manager Special Services Director Teacher	Monitoring Director Special Services Director Transition Director Center Manager Education Area Director	May 2017	-Transition Information -Information on IDEA/ADA/504 and Special Education
Department staff will provide parents with transition brochures to facilitate joint transition training and planning.	Transition Director Center Manger Teacher	Monitoring/Compliance Dir. Special Services Dir./Staff Center Manager	Ongoing	-Transition brochures
Department staff will secure parental consent in order to transfer children's records to LEA.	Transition Director Center Manager Support Services Staff	Monitoring/Compliance Dir. Special Services Director/Staff Transition Director Education Director Center Manager	May 2017	-Copies of consent on file

HIDALGO COUNTY HEAD START PROGRAM
Special Services Program Plan
2017-2018

Performance Standard: 45 CFR Part 1302.62 (a) (1-2)

Goal: The Hidalgo County Head Start Program will allow for parent and family engagement throughout the disability effort and meet the family's needs when relating to joint transition training and planning.

Objective: Assist in the transition of children entering Head Start and from Head Start to public school; provide information to parents on fostering the development of their children with disabilities, to include siblings. Provide opportunities for parents to observe large and small group and individual activities to include program activities as per IEP; inform parents of their rights under IDEA; inform parents of available resources (i.e. SSI, EPSDT); provide parents with support group information. Provide follow-up assistance and activities to reinforce program activities at home. Build parent confidence, skill and knowledge to advocate for their children's special needs.

TASK TO BE ACCOMPLISHED	PERSON RESPONSIBLE	PERSON RESPONSIBLE FOR MONITORING	PROJECTED DATE OF COMPLETION	DOCUMENTS OR FORMS
A resource directory and Parent Handbook is provided at the 1st parent orientation meeting for information on parent education programs. Parents and staff will be provided opportunity to learn about first aid, principals of preventative health, safety measures and any information on disabilities that may assist parents with their family's disability needs, thus promoting family well-being.	Family Services Director Transition Director Center Manager Teacher	Monitoring/Compliance Dir. Family Services Director Transition Director Special Services Director Center Manager	Ongoing	-Training Documentation -Resource Directory -Flyers - Disability Brochures -ARD -Parent handbook
A Family Partnership Agreement (FPA) will be utilized to assist families in identifying basic life support needs to include siblings needs related to disabilities. Staff will link and refer families to community agencies in order to assist them in receiving services.	Family Services Director Center Manager Support Services Staff	Monitoring/Compliance Dir. Family Services Director Special Services Director/Staff Education Area Director Center Manager	Ongoing	-FPA /Follow ups -Referral -PIR

HIDALGO COUNTY HEAD START PROGRAM
Special Services Program Plan
2017-2018

Performance Standard: 45 CFR Part 1302.62 (a) (1-2)

Goal: The Hidalgo County Head Start Program will allow for parent and family engagement throughout the disability effort and meet the family's needs when relating to joint transition training and planning.

Objective: Assist in the transition of children entering Head Start and from Head Start to public school; provide information to parents on fostering the development of their children with disabilities, to include siblings. Provide opportunities to parents to observe large and small group and individual activities to include program activities as per IEP; inform parents of their rights under IDEA; inform parents of available resources (i.e. SSI, EPSDT); provide parents with support group information. Provide follow-up assistance and activities to reinforce program activities at home. Build parent confidence, skill and knowledge to advocate for their children's special needs.

TASK TO BE ACCOMPLISHED	PERSON RESPONSIBLE	PERSON RESPONSIBLE FOR MONITORING	PROJECTED DATE OF COMPLETION	DOCUMENTS OR FORMS
Program staff will link and refer families to disability support group meetings. A support group list will be made available to parents through center managers. Cross cultural responsiveness will be considered.	Special Services Director Center Manager Support Services Staff	Monitoring/Compliance Dir. Special Services Dir./Staff Education Area Director Center Manager	-Beginning of school year -Ongoing	-Support group list at center -Referrals
Program staff will encourage parent and family engagement participation for trainings, workshops, conferences on IDEA, Section 504, and ADA to promote families as advocates and leaders. Develop honest dialogue with families regarding ARD meetings to promote participation.	Special Services Director Center Manager Support Services Staff Teacher	Special Services Director/Staff Education Area Director Monitoring Director Family Services Director Center Manger	-Ongoing	-Training agendas/sign-in -Flyers -Brochures -ARD/IEP

HIDALGO COUNTY HEAD START PROGRAM
Special Services Program Plan
2017-2018

Performance Standard: 45 CFR Part 1302.63 (b) (1-4)

Goal: The Hidalgo County Head Start Program will include children with disabilities and their families in the full range of services provided to all Head Start children and ensure that all services on the IEP are provided.

Objective: Arrange for options with LEA to meet the needs of each child to include joint placement, shared services, or shared personnel and strategies to check that special needs are met.

TASK TO BE ACCOMPLISHED	PERSON RESPONSIBLE	PERSON RESPONSIBLE FOR MONITORING	PROJECTED DATE OF COMPLETION	DOCUMENTS OR FORMS
Program staff will dual enroll children with LEA as needed. Share disability classroom assistant (DCA) with LEA if needed or as per IEP.	Special Services Director Center Manager LEA	Monitoring/Compliance Dir. Special Services Dir./Staff Education Director Center Manager	Ongoing	-Progress report -ARD minutes -Ongoing Monitoring
Program staff will secure MOU's with LEA and other agencies to provide services for children with disabilities and their families	Transition/Community Partnership Director Special Services Director	Monitoring/Compliance Dir. Transition/Community Partnership Director Special Services Director	Ongoing	-MOU on file
Through and existing MOU with LEA children with significant disabilities from the PPCD Unit of LEA are allowed opportunity to dual enroll with Head Start and participate in an inclusive educational setting. The MOU allows for a Special Education Teacher and para-professionals to come into the Head Start classroom and implement the IEP.	LEA Sp. Ed. Director LEA Sp. Ed. Teacher LEA Para Professionals HS Teacher/ Assistant Center Manager Sp. Services Director/Staff	Monitoring/Compliance Dir. Special Service Dir./Staff Education Director Center Manager LEA Special Education Dir.	Ongoing	-MOU on file

HIDALGO COUNTY HEAD START PROGRAM
Special Services Program Plan
2017-2018

Performance Standard: 45 CFR Part 1302.70

Goal: The Hidalgo County Head Start Program will allow for parent and family engagement throughout the disability effort and meet the family's needs when relating to joint transition training and planning.

Objective: Assist in the transition of children entering Head Start and from Head Start to public school; provide information to parents on fostering the development of their child with disabilities, to include siblings. Provide opportunities to parents to observe large and small group and individual activities to include program activities as per IEP; inform parents of their rights under IDEA; inform parents of available resources (i.e. SSI, EPSDT); provide parents with support group information. Provide follow-up assistance and activities to reinforce program activities at home. Build parent confidence, skill and knowledge to advocate for their children's special needs.

TASK TO BE ACCOMPLISHED	PERSON RESPONSIBLE	PERSON RESPONSIBLE FOR MONITORING	PROJECTED DATE OF COMPLETION	DOCUMENTS OR FORMS
Program staff will participate in joint transition training and planning with ECI at least 90 days prior to the child's 3rd birthday in order to provide the parent with educational information on Head Start services for enrollment.	Transition director Center Manager Support Services Staff ECI Representative	Monitoring/Compliance Dir. Special Services Director Transition Director Center Manager	Ongoing	-Child's ECI records -ECI meeting Notes -LEA Referral and follow up
Program staff will provide parents with brochures on disabilities, federal and state laws and a community resource directory, which will assist them in fostering the development of their children with disabilities.	Special Services Dir./Staff Transition Director Center Manager Support Services Staff	Monitoring/Compliance Dir. Special Services Dir./Staff Transition Director Center Manager	Ongoing	-Resource Directory -Disability brochures -Flyers -IDEA/ADA

HIDALGO COUNTY HEAD START PROGRAM
Special Services Program Plan
2017-2018

Performance Standard: 45 CFR Part 1303.75 (a-b)

Goal: The Hidalgo County Head Start Program will develop a Special Services Plan providing strategies for meeting the Special needs of children with disabilities and their families.

Objective: The purpose of the special services plan is to assure that all the content areas of Head Start are ensuring Parent and Family Engagement in the integration of children with disabilities and those resources are used efficiently. Maintain level of fiscal support to implement the plan and serve a minimum of 10% children with disabilities, to include children with significant disabilities, as diagnose by LEA and allow for expenditures such as salaries, evaluations , therapy services, transportation, special equipment/materials,T/TA, facility accessibility etc. as needed.

TASK TO BE ACCOMPLISHED	PERSON RESPONSIBLE	PERSON RESPONSIBLE FOR MONITORING	PROJECTED DATE OF COMPLETION	DOCUMENTS OR FORMS
Transportation is an allowable expense for those children that require transport to and from home or to therapy treatments. When transportation to treatment services can be accessed from other agencies, it should be used, otherwise, transportation will be provided.	Transportation Director Special Services Director Center Manager Support Services Staff	Monitoring/Compliance Dir. Special Services Dir./Staff Center Manager	Ongoing	-Request for Transportation -Parent Consent -Bus route schedules -Community Assessment -Self-Assessment -Ongoing Monitoring
IEP will outline the requirements for children in need of transportation services. Accommodations will be made as needed.	LEA Sp. Ed. Staff Transportation Director	Monitoring/Compliance Dir. Transportation Director Special Services Dir./Staff Center Manager		-Ongoing Monitoring
Program staff will be trained to feel competent in working comfortably with children of different disabilities to ensure that staff attitudes and unfamiliarity with particular disability are addressed. ADA training is accomplished at pre-service annually and as needed.	Special Services Dir./Staff ADA Trainer Staff Development Director	Monitoring/Compliance Dir. Special Services Dir./Staff Staff Development Director	Ongoing	-Ongoing Monitoring -Pre-Service training agenda -Sign in forms

HIDALGO COUNTY HEAD START PROGRAM
Special Services Program Plan
2017-2018

Performance Standard: 45 CFR Part 1302.70 (2) (c-d)

Goal: The Hidalgo County Head Start Program will allow for parent and family engagement throughout the disability effort and meet the family's needs when relating to joint transition training and planning.

Objective: Assist in the transition of children entering Head Start and from Head Start to public school; provide information to parents on fostering the development of their children with disabilities, to include siblings. Provide opportunities to parents to observe large and small group and individual activities to include program activities as per IEP; inform parents of their rights under IDEA; inform parents of available resources (i.e. SSI, EPSDT); provide parents with support group information. Provide follow-up assistance and activities to reinforce program activities at home. Build parent confidence, skill and knowledge to advocate for their children's special needs.

TASK TO BE ACCOMPLISHED	PERSON RESPONSIBLE	PERSON RESPONSIBLE FOR MONITORING	PROJECTED DATE OF COMPLETION	DOCUMENTS OR FORMS
Program staff will link parents to support groups; list will be made available to parents through center managers. Cross cultural responsiveness will be considered.	Special Services Director Center Manager Support Services Staff Teacher	Monitoring/Compliance Dir. Special Services Dir./Staff Center Manager	Ongoing	-Support group list at center
Encourage parent and family engagement participation for trainings, workshops, conferences on IDEA/Section 504, ADA to promote families as advocates and leaders. Develop honest dialogue with families regarding ARD meeting to promote participation.	Special Services Dir./Staff Family Services Director Center Manager Support Services Staff Teacher	Monitoring/Compliance Dir. Special Services Dir./Staff Family Services Director Center Manger	Ongoing	-Training agendas/sign-in -Flyers -Brochures -ARD meetings
Encourage parent and family engagement by providing opportunity to observe large, small and individual group activities to include activities per IEP; by participating in the yearly Self-Assessment, observe child's screening and assessments, attend child's ARD meetings, volunteer in the classroom and attend therapy sessions with their children when possible. This will assist the development of families as leaders.	Special Services Dir./Staff Education Director Center Manager Support Services Staff	Monitoring/Compliance Dir. Special Services Dir./Staff Education Director Center Manager Support Services Staff	Ongoing	-Self-Assessment -Volunteer file -Cameras -IEP -Screening and Assessment

HIDALGO COUNTY HEAD START PROGRAM
Special Services Program Plan
2017-2018

Performance Standard: 45 CFR Part 1302.71

Goal: The Hidalgo County Head Start Program will allow for parent and family engagement throughout the disability effort and meet the family's needs when relating to joint transition training and planning.

Objective: Assist the parents in the transition of children from Head Start to public school or other placement/options. Notify the school of the child's planned enrollment prior to date of enrollment.

TASK TO BE ACCOMPLISHED	PERSON RESPONSIBLE	PERSON RESPONSIBLE FOR MONITORING	PROJECTED DATE OF COMPLETION	DOCUMENTS OR FORMS
Program staff will provide parents with information on special education services available in the public school system as a guide to parents on joint transition training and planning.	Transition Director Special Services Dir./Staff Center Manager Support Services Staff Teacher	Monitoring/Compliance Dir. Special Services Dir./Staff Transition Director Center Manager	May 2017	-Transition Information -Training sign-In on IDEA/ADA/504
Program staff will provide parent with transition brochures to facilitate joint transition training and planning.	Transition Director Special Services Dir./Staff Center Manager	Monitoring/Compliance Dir. Special Services Director Center Manager	Ongoing	-Transition brochures
Program staff will secure parental consent prior to transferring records to LEA.	Transition Director Center Manager	Monitoring/Compliance Dir. Special Services Dir./Staff Transition Director Center Manager	May 2017	-Copies of consent on file
Department staff will provide parent with a transition letter that lists special education staff contacts, phone numbers, campus assignment etc. in an attempt to provide a smooth transition.	Transition Director Center Manager Support Services Staff	Monitoring/Compliance Dir. Special Services Dir./Staff Transition Director Center Manager	May 2017	-Transition Letter to Parents

HIDALGO COUNTY HEAD START PROGRAM
Special Services Program Plan
2017-2018

Performance Standard: 45 CFR Part 1302.101 (a) (1)

Goal: The Hidalgo County Head Start Program will develop a Special Services Plan providing strategies for meeting the Special needs of children with disabilities and their families.

Objective: The purpose of the special services plan is to assure that all the content areas of Head Start are ensuring Parent and Family Engagement in the integration of children with disabilities and those resources are used efficiently. Maintain level of fiscal support to implement the plan and serve a minimum of 10% children with disabilities, to include children with significant disabilities, as diagnose by LEA and allow for expenditures such as salaries, evaluations , therapy services, transportation, special equipment/materials T/TA, facility accessibility etc. as needed.

TASK TO BE ACCOMPLISHED	PERSON RESPONSIBLE	PERSON RESPONSIBLE FOR MONITORING	PROJECTED DATE OF COMPLETION	DOCUMENTS OR FORMS
Transportation is an allowable expense for those children that require transport to and from home or to therapy treatments. When transportation to treatment services can be accessed from other agencies, it should be used, otherwise, transportation will be provided.	Transportation Director Special Services Director Center Manager	Monitoring/compliance Dir. Special Services Dir./Staff Center Manager	Ongoing	-Request for Transportation -Parent Consent -Bus route schedules -Community Assessment -Self-Assessment -Ongoing Monitoring

HIDALGO COUNTY HEAD START PROGRAM
Special Services Program Plan
2017-2018

Performance Standard: 45 CFR Part 1302.101 (a) (3), 1302.101 (a) (1)

Goal: The Hidalgo County Head Start Program will provide a Special Services Plan which outlines strategies for allowing full participation of children with disabilities and their families.

Objective: The purpose of the special services plan is to assure that all the content areas of Head Start are ensuring Parent and Family Engagement in the integration of children with disabilities and those resources are used efficiently. Maintain level of fiscal support to implement the plan and serve a minimum of 10% children with disabilities, to include children with significant disabilities, as diagnose by LEA and allow for expenditures such as salaries, evaluations , therapy services, transportation, special equipment/materials T/TA, facility accessibility etc. as needed.

TASK TO BE ACCOMPLISHED	PERSON RESPONSIBLE	PERSON RESPONSIBLE FOR MONITORING	PROJECTED DATE OF COMPLETION	DOCUMENTS OR FORMS
The Special Services budget will be prepared and reviewed by the Head Start Executive Director, Finance Director and the Special Services Director. An appropriate allotment of funds will be assigned to allow services to children with disabilities. Non-Head Start funding such as Medicaid, health insurance, in-kind etc. will be used to the maximum feasible coverage before Head Start funds are utilized. The Community Assessment is considered when preparing the budget.	Assistant Program Director Finance Director Special Services Director	Executive Program Director Assistant Program Director Finance Director Special Services Director	Beginning to end of fiscal year	-Budget copy -Monthly budget reports -PIR -Community Assessment
Allowable budget expenses include salaries for special services staff, children's evaluations and treatment, if needed, special equipment/materials, eating utensil, manipulatives, walkers, special scissors, T/TA, travel, per diem, conference registration, consultants, substitutes, etc., and facility accessibility, (ramps, etc.)	Assistant Program Director Finance Director Special Services Director	Executive Program Director Assistant Program Director Monitoring/Compliance Dir. Special Services Director	Ongoing	-Monthly budget reports -On-going monitoring on budget expenditures

HIDALGO COUNTY HEAD START PROGRAM
Special Services Program Plan
2017-2018

Performance Standard: 45 CFR 1302.102 (b) (1) (i-ii)

Goal: To ensure that the program is effectively implementing Federal Regulations.

Objective: To establish and maintain procedures for ongoing monitoring that ensures effective implementation of the performance standards and enhances the quality of service delivery in the area of Special Services.

TASK TO BE ACCOMPLISHED	PERSON RESPONSIBLE	PERSON RESPONSIBLE FOR MONITORING	PROJECTED DATE OF COMPLETION	DOCUMENTS OR FORMS
Development of Individual Education Plans (IEP's) – The multidisciplinary team will develop an LEA IEP for children who were evaluated and qualified for a specific disability. IEP objectives will be reflected in the weekly lesson plan for reinforcement purposes by the teaching staff.	Teacher Assistant Teacher Disability Classroom Assistant LEA Special Education Staff	Monitoring/Compliance dir. Center Manager Support Service Staff Content Area Directors	Initial-45 school days as of parent consent for evaluation and 30 school days as of evaluation Annual ARD Yearly	-Compliance Monitoring Instrument -ARD minutes -Notice of ARD meeting -Weekly lesson plan -Center observation form
Referral Tracking Log – A referral tracking log will be maintained in the Special Services Department. The log will be updated as the referrals are received in the department.	Special Services Dir./Staff Special Services Clerk	Monitoring/Compliance Dir. Special Services Director Health Services Director Heath Services Secretary	Ongoing	-Compliance Monitoring Instrument -Referral Tracking Log
IEP Progress Report –IEP Progress Reports will be prepared by the teachers and sent out to parents every six (6) weeks. The IEP progress report is connected to the 7 Domains of Learning/Child Outcomes and will reflect the child's progress on the IEP objectives. LEA progress reports will be secured by the case managers.	Teacher Center Managers Support Services Staff	Monitoring/Compliance Dir. Center Manager Special Services Staff Content Area Directors	HS- Every six weeks LEA- Every six weeks	-Compliance Monitoring Instrument -IEP Progress Report/LEA Report -Center observation form

HIDALGO COUNTY HEAD START PROGRAM
Special Services Program Plan
2017-2018

Performance Standard: 45 CFR 1302.102 (b) (1) (i-ii)
Goal: To ensure that the program is effectively implementing Federal Regulations.

Objective: To establish and maintain procedures for ongoing monitoring that ensures effective implementation of the performance standards and enhances the quality of service delivery in the area of Special Services.

TASK TO BE ACCOMPLISHED	PERSON RESPONSIBLE	PERSON RESPONSIBLE FOR MONITORING	PROJECTED DATE OF COMPLETION	DOCUMENTS OR FORMS
Therapy Classroom Sign Out/In log for tracking services – The teachers will maintain the Therapy Sign out/in log in their classrooms individually for every child receiving LEA services. The service provider will sign the child out and in when returning to the classroom after the service. The teacher will submit the log to the Special Services Department at the end of the month.	Teacher Assistant Teacher	Monitoring/Compliance Dir. Center Manager Support Services Staff Content Area Directors	Monthly	-Therapy Sign Out /In Log -Center Observation form -Compliance Monitoring Instrument
Monthly Follow-Up Notes – The case worker (Center Manager or Support Services Staff) will submit monthly follow-up notes reflecting the child's progress/case notes to the Special Services Department on a monthly basis.	Center Manager Support Services Staff	Monitoring/Compliance Dir. Center Manager Support Service Staff Content Area Directors	Monthly	-Monthly Follow-up -Notes -Center observation form -Compliance Monitoring Instrument
Case Staffings – Case staffings will be held for children with a disability or suspected disability. All areas of need will be discussed (i.e.-special diets, special equipment/materials, medical plan of action etc.) so that the best possible services may be provided to the child upon enrollment.	Parent Center Manager Support Services Staff Teacher Special Services Dir./Staff Content Area Directors	Monitoring/Compliance Dir. Content Area Directors Center Manager	May 2017 Ongoing	-Staffing Notice -Staffing Notes -Center observation Form -Compliance Monitoring Instrument

HIDALGO COUNTY HEAD START PROGRAM
Special Services Program Plan
2017-2018

Performance Standard: 45 CFR 1302.102 (b) (2)

Goal: To ensure that the program is effectively implementing Federal Regulations.

Objective: To establish and maintain procedures for ongoing monitoring that ensures effective implementation of the performance standards and enhances the quality of service delivery in the area of Special Services.

TASK TO BE ACCOMPLISHED	PERSON RESPONSIBLE	PERSON RESPONSIBLE FOR MONITORING	PROJECTED DATE OF COMPLETION	FORMS
Self -Assessment- All Head Start centers will be reviewed for compliance purposes in the area of disabilities. The Special Services Director and assigned team will review all records of children with disabilities and collect required data to address program strengths and weaknesses. Possible solutions to be implemented by the Special Services Department to ensure a successful and compliant Self -Assessment in the area of disabilities include, but are not limited to the following:	Special Services Staff Parents (if possible)	Monitoring/Compliance Dir. Education Area Director Special Services Dir./Staff	January 2018	-Center File Monitoring Tool -ADA Checklist -Summary of Results

HIDALGO COUNTY HEAD START PROGRAM
Special Services Program Plan
2017-2018

Performance Standard: 1302.102 (b) (2)

Goal: To ensure that the program is effectively implementing Federal Regulations.

Objective: To establish and maintain procedures for ongoing monitoring that ensures effective implementation of the performance standards and enhances the quality of service delivery in the area of Special Services.

TASK TO BE ACCOMPLISHED	PERSON RESPONSIBLE	PERSON RESPONSIBLE FOR MONITORING	PROJECTED DATE OF COMPLETION	FORMS
Special Services staff will provide T/TA to recently hired staff prior to Self-Assessment	Special Service Dir./Staff	Monitoring/Compliance Dir. Special Services Dir./Staff	Aug-Jan 2018 -Ongoing	-T/TA sign in
Special Services staff will continue to train as required and upon request.	Special Services Dir./Staff	Monitoring/Compliance Dir. Special Services Dir./Staff Center Manager Education Director	Ongoing	-Center File Monitoring Tool -T/TA sign in
Special Services staff will visit all Head Start centers that have children with disabilities prior to Self-Assessment, and complete "on the spot corrections as needed".	Special Services Dir./Staff	Monitoring/Compliance Dir. Special Services Dir./Staff	Ongoing	-Center File Monitoring Tool
Special Services Staff will provide the Center Manager a copy of the Monitoring Tool indicating required incomplete/data at time of visit, allowing time for corrections/completion of required data.	Special Services Staff	Monitoring/Compliance Dir. Special Services Dir./Staff	Ongoing	-Center File Monitoring Tool

HIDALGO COUNTY HEAD START PROGRAM
Special Services Program Plan
2017-2018

Performance Standard: 45 CFR Part 1302.101 (a) (1-4), 1302.101 (3)

Goal: The Hidalgo County Head Start Program will provide a Special Services Plan which outlines strategies for allowing full participation of children with disabilities and their families.

Objective: To ensure all content areas of Head Start are carrying out Parent and Family Engagement in the integration of children with disabilities and their families; and that resources are used efficiently, maintain level of fiscal support to implement the plan and serve children with disabilities, and allow for expenditures such as salaries, evaluations, therapy services, transportation, special equipment and materials T/TA, facility accessibility, etc. as needed.

TASK TO BE ACCOMPLISHED	PERSON RESPONSIBLE	PERSON RESPONSIBLE FOR MONITORING	PROJECTED DATE OF COMPLETION	DOCUMENTS OR FORMS
Allowable budget expenses include salaries for special services staff, children's evaluations and treatment, if needed, special equipment/materials, eating utensil, Dr. reports, manipulatives, walkers, special scissors, T/TA, travel, per diem, conference registration, consultants, substitutes, etc., and facility accessibility, (ramps, etc.)	Assistant Program Director Finance Director Special Services Director	Executive Program Director Assistant Program Director Special Services Director	Ongoing	-Monthly budget reports -On-going monitoring on budget expenditures
Transportation is an allowable expense for those children that require transport to and from home or to therapy treatments. When transportation to treatment services can be accessed from other agencies, it should be used, otherwise, transportation will be provided. Accommodations at center can be made thus allowing LEA to serve on site.	Transportation Director Special Services Director Center Manager	Transportation Director Special Services Dir./Staff Center Manager	Ongoing	-Request for Transportation -Transportation Consent -Bus Route schedule -Community Assessment
The plan will be updated annually, the Health Advisory Committee will provide input allowing for parent and family engagement and Head Start Content area integration, it is then presented to Policy council for approval.	Special Services Director Health Advisory Committee	Executive Program Director Special Services Dir./Staff Policy Council	May 2017	-Self-Assessment -Ongoing Monitoring

HIDALGO COUNTY HEAD START PROGRAM
Special Services Program Plan
2017-2018

Performance Standard: 45 CFR Part 1302.101 (a) (1-4), 1302.101 (3)

Goal: The Hidalgo County Head Start Program will provide a Special Services Plan which outlines strategies for allowing full participation of children with disabilities and their families.

Objective: To assure that all content areas of Head Start are carrying out Parent and Family Engagement in the integration of children with disabilities; and that resources are used efficiently; maintain level of fiscal support to implement the plan and serve a minimum of children with disabilities.

TASK TO BE ACCOMPLISHED	PERSON RESPONSIBLE	PERSON RESPONSIBLE FOR MONITORING	PROJECTED DATE OF COMPLETION	DOCUMENTS OR FORMS
The Special Services budget will be prepared and reviewed by the Head Start Executive Director, Finance Director and the Special Services Director. An appropriate allotment of funds will be assigned to allow services to children with disabilities. Non-Head Start funding such as Medicaid, health insurance, in-kind etc. will be used to the maximum feasible coverage before Head Start funds are utilized. The Community Assessment is considered when preparing the budget.	Assistant Program Director Finance Director Special Services Director	Executive Program Director Assistant Program Director Finance Director Special Services Director	Beginning to end of fiscal year	-Budget copy -Monthly budget reports -PIR -Community Assessment

HIDALGO COUNTY HEAD START PROGRAM
Special Services Program Plan
2017-2018

Performance Standard: 45 CFR Part 1303.75 (a-b)

Goal: The Hidalgo County Head Start Program will establish and maintain an outreach and recruitment process to active, locate and recruit children with disabilities/significant disabilities.

Objective: To assure a minimum of 10% of the total funded enrollment opportunities for children with disabilities Provide training for staff and volunteers regarding disability regulations 45 CFR part 84, nondiscrimination on the basis of a disability/ADA, IDEA and 504. Coordinate and collaborate recruitment efforts with LEA, ECI and other agencies in the child find process. Provide training by agencies that specialize in working with children with disabilities.

TASK TO BE ACCOMPLISHED	PERSON RESPONSIBLE	PERSON RESPONSIBLE FOR MONITORING	PROJECTED DATE OF COMPLETION	DOCUMENTS OR FORMS
Provide specially equipped buses with lifts to transport children with physical disabilities for ADA Compliance.	Transportation Director	Monitoring/Compliance Dir. Transportation Director Special Services Director Education Area Director	Ongoing	-Transportation Plan -Ongoing monitoring -Transportation schedule
Provide school buses that are designed for transporting children with disabilities; must meet ADA compliance.	Transportation Director	Monitoring/Compliance Dir. Transportation Director Special Services Director Education Director	Ongoing	
Provide training for bus drivers/aides who transport children with special needs.	Transportation Director	Monitoring/Compliance Dir. Special Services Director Education Director	Ongoing	

TRANSITION SERVICES PLAN

Hidalgo County Head Start Program
Transition Services Program Plan
2017 - 2018

Performance Standard C. F. Regulation: 1302. 71 (c) (2)(i)(ii)(iii), and 1302.72 (2) (i)(a)(b) Transition Services

Goal: To communicate and coordinate with the local education agencies through networking meetings to plan for transition services.

Objective: To maintain and establish procedures that will facilitate the transition process for children enrolled in the Head Start program.

Task To Be Accomplished	Person Responsible	Person Responsible for Monitoring	Projected Date of Completion	Documents or Forms
1. The parents will be notified of necessary records and information that are required for enrollment for their designated local education agency. Staff will prepare a packet to be transferred to the next educational setting.	Center Managers	Community Partnership/Transition Director	On-Going	Confidentiality Statement – Child Record
2. The Program will maintain on-going coordination and collaboration between the Head Start staff and their counterparts in the schools and community programs.	Center Managers	Community Partnership/Transition Director	On-Going	Networking Meeting Record
3. Administrative Staff will meet with the center managers and support services staff to facilitate preparing and involving children and parents in joint transition training and planning activities.	Community Partnership/ Transition Director Area Directors	Community Partnership/Transition Director	On-Going As Scheduled in May	Field Trip Request Form
4. The Program will encourage community participation through community wide events to allow parents, staff, community organizations, and children to meet, visit the program, and ask questions.	Community Partnership/ Transition Director Family Services Director	Community Partnership/ Transition Director	On-Going	Network Meeting Parent Fair Monthly Parent Meetings
5. The Program will assist & support transitions for families and children who move out of the community to include homeless families and foster children.	Center Managers Community Partnership/ Transition Director	Community Partnership/ Transition Director	Ongoing	Childs Transition packet consent for release form Referral Data Form Tracking Log

Hidalgo County Head Start Program
Transition Services Program Plan
2017 - 2018

Performance Standard C. F. Regulation: 1302.60, 1302.61 (a), 1302.62(a) and 1302.70 (e) Transition Services

Goal: To encourage and involve parents in the transition of their child into Head Start.

Objective: To schedule and conduct meetings / activities to engage parents in the transition of their children into the Head Start Program; including transition of children with disabilities into the Head Start Program.

Task To Be Accomplished	Person Responsible	Person Responsible for Monitoring	Projected Date of Completion	Documents or Forms
1. The Program will coordinate and collaborate with ECI Early Childhood Intervention agencies on children who are being referred to the Head Start Program.	Center Managers Support Services Facilitators Support Services Assistants	Community Partnership/ Transition Director	On-Going	Referral Data Confidentiality Statement
2. The Program will conduct "face to face" transition meetings with the parents, ECI agency, and the local education agency.	Center Managers Support Services Facilitators Support Services Assistants	Community Partnership/ Transition Director	On-Going	Referral Data
3. The Program will ensure that appropriate placement of children enrolled with developmental programs, are provided with the steps necessary to participate and enroll in the Head Start Program.	Community Partnership/ Transition Director Special Services Director	Community Partnership/ Transition Director Special Services Director	On-Going	Confidentiality Statement

Hidalgo County Head Start Program
Transition Services Program Plan
2017 - 2018

Performance Standard C. F. Regulation: 1302.70 (a) (b) (c) Transition Services

Goal: To ensure that the Transition Services are successfully implemented.

Objective: To develop and implement schedules of activities to facilitate parent participation in the transition of children in and out of the program.

Task To Be Accomplished	Person Responsible	Person Responsible for Monitoring	Projected Date of Completion	Documents or Forms
1. The Program will ensure implementation and compliance of the Head Start Performance Standards in the areas of Joint Transition Training and Planning.	Community Partnership/ Transition Director	Community Partnership/ Transition Director	On-Going	Referral Data Form Information Packet
2. The Program will provide joint in-service opportunities and cross-program visitations for staff and parents to increase the understanding of early childhood development and assist in placing practices which assures developmental continuity across the different programs.	Community Partnership/ Transition Director Staff Development Department Directors	Community Partnership/ Transition Director	On-Going	
3. The Program will prepare a monthly report on all Joint Transition/Training and Planning activities.	Community Partnership/ Transition Director	Community Partnership / Transition Director	On-Going	On File

Hidalgo County Head Start Program
Transition Services Program Plan
2017 – 2018

Performance Standard C. F. Regulation: 1302.71(a)(b)(1)(2)(c)(1)(2)(3)(d)(e) Transition Services/On-going Monitoring

Goal: To ensure that the program is effectively implementing Federal regulations.

Objective: To establish and maintain procedures for ongoing monitoring that will systematically measure strengths and weaknesses for the enhancement of quality service delivery in the area of Transition.

Task To Be Accomplished	Person Responsible	Person Responsible for Monitoring	Projected Date of Completion	Documents or Forms
1. Joint Transition Training and Planning Packets-Parents will be notified of necessary records and information that is required for enrollment to their designated school district. The Program will prepare a packet to be given to the respective local education agency at the end of school year.	Center Managers	Community Partnership/ Transition Director	On-Going	Confidentiality Statement – Child Record Consent for Release of Info
2. Joint Transition Training and Planning Networking Meeting- The department will have ongoing coordination and collaboration with the Head Start staff and the local education agencies and community partners.	Center Managers	Community Partnership/ Transition Director	On-Going	Networking Meeting Record
3. Administrative staff will meet with the center managers and support services staff to prepare and involve children and parents with transition to the public school.	Community Partnership /Transition Director Area Directors	Community Partnership /Transition Director	On-Going As Scheduled in May	Field Trip Request Form Referral Forms Tracking Logs
4. ECI Early Childhood Intervention Agencies- The department will arrange for meetings to be held between the referring agency and the Head Start staff.	Community Partnership /Transition Director Family Services Director	Community Partnership /Transition Director	On-Going	Referral Forms Tracking Logs
5. Face to Face Meetings-The department will conduct meetings with the parent, ECI agency and with local community partners.				
6. Community/LEA Meeting for Joint Transition Training and Planning Packages – The department will meet with the Local Education agencies (school districts) to hand deliver Head Start children's transition packages.	Community Partnership /Transition Director	Community Partnership /Transition Director Community Partnership /Transition Director	On-Going	Agendas Sign-In Forms

TRANSPORTATION SERVICES PLAN

Hidalgo County Head Start Program

Transportation Services Program Plan 2017 – 2018

Advisory Committee Approval:	04.27.17
Policy Council Approval:	00.00.17
Commissioners' Court Approval:	00.00.17

Hidalgo County Head Start Program

Transportation

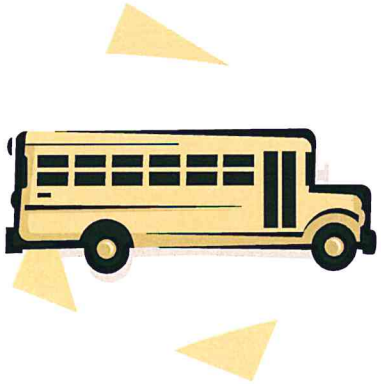

OSCAR PALACIOS
Field Operations Director

Oliver Solis
Transportation Coordinator

Nicolas Castillo
Warehouse Coordinator

Ana Quiroz
Field Operations/Transportation Clerk

HIDALGO COUNTY HEAD START PROGRAM
TRANSPORTATION PLAN
2017 - 2018

PERFORMANCE STANDARD: 1303.70 Transportation

Purpose: The Program provides transportation services, when such services are a barrier to participation in the Program by the neediest families in the community. When the Program is unable to provide transportation services, it will provide reasonable assistance, such as information about public transit availability, to the families of such children to arrange transportation to and from its activities, and provide information about these transportation options in recruitment announcements. The Program will make a reasonable effort to coordinate transportation resources with other human services agencies in its community in order to control costs and to improve the quality and availability to transportation services. Assessment of a family's needs is conducted before the beginning of the year to assist the neediest families with what the Program is able to fund using the current fleet of thirty-three (33) buses.

HIDALGO COUNTY HEAD START PROGRAM
TRANSPORTATION PLAN
2017 - 2018

PERFORMANCE STANDARD: 1303.70 Transportation

GOAL: Hidalgo County Head Start Program will provide transportation services with fidelity and commitment to families who do not have access to transportation.

OBJECTIVE: To asses transportation needs of families served and ongoing delivery of transportation services to the neediest families..

Task to be Accomplished	Person Responsible	Person Responsible for Monitoring	Projected Date of Completion	Document or Forms
1. The Program will provide transportation to a portion of the enrolled children with a total of thirty-three regular routes.	Field Operations Director Transportation Coordinator	Field Operations Director Transportation Coordinator	August thru May	Application Priority ranking criteria
2. Families whose children are not being transported and request assistance will be provided with guidance for other alternatives.	Field Operations Director Transportation Coordinator Bus Drivers	Field Operations Director Transportation Coordinator	August thru May	Transportation Application
3. The program will acquire sufficient number of vehicles to transport qualifying children, budget permitting.	Field Operations Director Transportation Coordinator	Field Operations Director Transportation Coordinator	On-going	Transportation Request Form Vehicle Inventory

HIDALGO COUNTY HEAD START PROGRAM
TRANSPORTATION PLAN
2017 - 2018

PERFORMANCE STANDARD: 1303.70

GOAL: The Hidalgo County Head Start Program will make a coordinated effort to explore the possibility of implementing private or other human services agencies to improve the cost of transportation services.

OBJECTIVE: To plan and administer a cost effective transportation service to qualifying children.

Task to be Accomplished	Person Responsible	Person Responsible for Monitoring	Projected Date of Completion	Documents or Forms
1. The program currently does not have the need to contract private or public transportation services. The program has a collaborative agreement with Teaching and Mentoring Communities Head Start to facilitate transportation should our program not have adequate number of buses for program sponsored events. The program has also developed a "cost per child" report to determine the feasibility of transportation by geographical areas. The program has also contacted the Lower Rio Grande Valley Development Council, but currently the program does not have the need for alternate transportation.	Field Operations Director Transportation Coordinator	Field Operations Director Transportation Coordinator	On-Going	Cost Per Child Monthly Report

HIDALGO COUNTY HEAD START PROGRAM
TRANSPORTATION PLAN
2017 - 2018

PERFORMANCE STANDARD: 1303.71 Vehicles

GOAL: The Hidalgo County Head Start Program will use appropriate equipment to ensure compliance with Head Start Standards to transport children safely.

OBJECTIVE: To install and maintain in good working conditions all vehicles for safety restraint systems.

Task to be Accomplished	Person Responsible	Person Responsible for Monitoring	Projected Date of Completion	Documents or Forms
1. The Program will equip all transportation units with an approved child restraint system in proportion to height and weight. 2. Staff will inspect each vehicle with safety restraint systems to ensure all are functioning.	Field Operations Director Transportation Coordinator Bus Drivers	Assigned Bus Driver	On-Going	Inspection Log

HIDALGO COUNTY HEAD START PROGRAM
TRANSPORTATION PLAN
2017 - 2018

PERFORMANCE STANDARD: 1303.72 Vehicle Operations

GOAL: The Hidalgo County Head Start Program will use grant funds to purchase school buses or alternate allowable vehicles.

OBJECTIVE: To require all vehicles used for transporting children be equipped with child restraint systems and reverse beepers in order to meet all federal, state and local requirements.

Task to be Accomplished	Person Responsible	Person Responsible for Monitoring	Projected Date of Completion	Documents
1. Program will purchase sufficient school buses or allowable alternate vehicles with reverse beepers and child restraint systems.	Field Operations Director Transportation Coordinator	Field Operations Director Transportation Coordinator Risk Management	Grant Award Guidelines	Specification Sheet
2. Program will use specifications for new vehicles from an approved source, such as the State's General Service Agency.	Procurement Director	Field Operations Director Transportation Coordinator Risk Management	Grant Award Guidelines	Specification Sheet
3. Program maintains up-to-date child rosters and lists of the adults each child is authorized to be released to, including alternates in case of and emergency, are maintained and no child is left behind, either in the classroom or on the vehicle at the end of the route.	Field Operations Director Transportation Coordinator	Field Operations Director Transportation Coordinator Risk Management	Grant Award Guidelines	Lists of children Lists of adults
4. The Program will place at least one (1) bus monitor on board at all times, with additional bus monitors provided as needed.	Field Operations Director Transportation Coordinator	Field Operations Director Transportation Coordinator Risk Management	Grant Award Guidelines	List of Bus Monitors

HIDALGO COUNTY HEAD START PROGRAM
TRANSPORTATION PLAN
2017 - 2018

PERFORMANCE STANDARD: 1303.71 Vehicles

GOAL: The Hidalgo County Head Start Program will maintain all vehicles in safe operating condition.

OBJECTIVE: To assure the safety of the children when transported.

Task to be Accomplished	Person Responsible	Person Responsible for Monitoring	Projected Date of Completion	Documents
1. Program staff will implement procedures for the safe operation of all transportation units.	Field Operations Director Transportation Coordinator Bus Drivers	Field Operations Director Transportation Coordinator Risk Management	On-Going	Preventive Maintenance Log Pre/Post Trip Inspection Report
2. Program staff will conduct yearly inspections by state motor vehicle inspection stations, and conduct preventive maintenance and daily pre and post trip inspection by the driver.	Field Operations Director Transportation Coordinator Bus Drivers	Field Operations Director Transportation Coordinator Risk Management	On-Going	Preventive Maintenance Log Pre/Post Trip Inspection Report

HIDALGO COUNTY HEAD START PROGRAM
TRANSPORTATION PLAN
2017 - 2018

PERFORMANCE STANDARD: 1303.72 Vehicle Operations

GOAL: Hidalgo County Head Start Program will ensure that appropriate height and weight safety restraint systems be utilized for children weighing fifty (50) pounds or less while vehicle is in motion; aisles and emergency exits be kept clear and loose articles be properly restraint.

OBJECTIVE: To transport children safely to and from the center, program related activities and service providers.

Task to be Accomplished	Person Responsible	Person Responsible for Monitoring	Projected Date of Completion	Documents or Forms
1. To equip all vehicles used for transportation with an approved restraint system before January 2004. Baggage and loose articles will be properly secured including maintaining clear aisles and emergency exits unobstructed at all times.	Field Operations Director Transportation Coordinator Bus Driver	Transportation Coordinator Bus Driver Bus Aide	On-Going	Monitoring Instrument
2. Each bus will have a qualified bus aide to assist and supervise children. When the assigned bus aide is absent, a substitute is utilized.	Field Operations Director Transportation Coordinator Bus Driver	Transportation Coordinator	On-Going	Monitoring Instrument

HIDALGO COUNTY HEAD START PROGRAM
TRANSPORTATION PLAN
2017 - 2018

PERFORMANCE STANDARD: 1303.72 Vehicle Operations

GOAL: The Hidalgo County Head Start Program will ensure that all assigned drivers be fully qualified.

OBJECTIVE: To implement a comprehensive application, screening and monitoring process with all persons seeking employment as drivers to ensure compliance with local and federal requirements.

Task to be Accomplished	Person Responsible	Person Responsible for Monitoring	Projected Date of Completion	Documents or Forms
1. The Program will require all assigned drivers be current on all the required drug testing, certifications and be tested randomly for drugs, also mental and physical ability, or with reasonable accommodations be able to perform duties determined by a medical examination. Medical examination shall be completed prior to commencing driving duties.	Field Operations Director Transportation Coordinator Human Resources	Field Operations Director Transportation Coordinator	On-Going	Driver License Required Training and Certifications
2. The Program will develop a questionnaire relevant to driving and work experience to be implemented during the interview process, including previous employment verification, criminal background check and driving traffic violations.	Field Operations Director Transportation Coordinator Human Resources	Field Operations Director Transportation Coordinator	On-Going	Questionnaire Form
3. Transportation staff will perform annual appraisal of drivers.	Field Operations Director Transportation Coordinator Human Resources	Field Operations Director Transportation Coordinator	On-Going	Appraisal Form

PERFORMANCE STANDARD: 1303.72 Vehicle Operations - Continued

GOAL: The Hidalgo County Head Start Program will ensure that all assigned drivers be fully qualified.

OBJECTIVE: To implement a comprehensive application, screening and monitoring process with all persons seeking employment as drivers to ensure compliance with local and federal requirements.

Task to be Accomplished	Person Responsible	Person Responsible for Monitoring	Projected Date of Completion	Documents or Forms
4. Human Resources staff will review applications to ensure applicants: •Have a valid Commercial Driver's License (CDL) to drive vehicles used to transportation children. • Have a valid Commercial Driver's License (CDL) to drive the vehicles used to transport children •Meet any physical, mental, and other requirements as necessary to perform job related functions with any necessary reasonable accommodations. •The application review process will include •Disclosure by applicant of all moving traffic violations, regardless of penalty. •A check of the applicants driving record through the appropriate state agency including a check of the applicant's record through the National Driver Register if applicable. •A check that drivers qualify, the applicant meets driver training requirements in the state. •A conditional employment offer to the applicant before applicant begins to work a medical examination to establish that driver possess the physical ability to perform job related function with any necessary accommodations.	Field Operations Director Transportation Coordinator Human Resources Risk Management	Field Operations Director Transportation Coordinator	On-Going	Driver License Required Training and Certifications Questionnaire Form

HIDALGO COUNTY HEAD START PROGRAM
TRANSPORTATION PLAN
2017 - 2018

PERFORMANCE STANDARD: 1303.72 Vehicle Operations

GOAL: The Hidalgo County Head Start Program will ensure that all designated drivers receive the required training within the allowed time frame.

OBJECTIVE: To provide safe transportation to program participants.

Task to be Accomplished	Person Responsible	Person Responsible for Monitoring	Projected Date of Completion	Documents or Forms
1. The program will provide the required training to all drivers upon hiring and during pre-service, on-going and as needed. Topics include classroom, behind-the-wheel to safely and efficiently operate the vehicle; running fixed routes; loading/unloading children; stopping at railroad crossing and other maneuvers; evacuation procedures and the operation of special equipment (lifts assistive devices). Bus monitors are also trained in their area of responsibility. Each driver will be evaluated yearly which will include road performance.	Field Operations Director, Transportation Coordinator	Transportation Coordinator	July thru May	Program Calendar
2. Hands on training at Region One Education Center.	Transportation Coordinator	Field Operations Director	July thru May	Agendas Sign In Sheets
3. The program will provide training to bus monitors before being assigned on the following topics: administer first aid in case of injury, handle emergency situations including, vehicle evacuations, operate special equipment (wheel chair lifts, assistance devices or special occupant restraints, conduct routine maintenance and safety checks of vehicles, instruction on topics related to transporting children with disabilities, and pre and post trip vehicle checks.	Field Operations Director Transportation Coordinator Bus Driver Bus Aide	Field Operations Director Transportation Coordinator	July thru May	Agendas Sign In Sheets

HIDALGO COUNTY HEAD START PROGRAM
TRANSPORTATION PLAN
2017 - 2018

PERFORMANCE STANDARD: 1303.73 Trip Routing

GOAL: The Hidalgo County Head Start Program will address concerns when planning fixed routes.

OBJECTIVE: To follow a process which will indicate specific procedures and guidance for staff to ensure safety of the children.

Task to be Accomplished	Person Responsible	Person Responsible for Monitoring	Projected Date of Completion	Documents or Forms
The Program will ensure: 1. The time a child is in transit to and from the Program must not exceed one (1) hour unless there is no shorter route available or any alternative shorter route is either unsafe or impractical; 2. Vehicles are not loaded beyond maximum passenger capacity at any time; 3. Drivers do not back up or make U-turns, except when necessary for safety reasons or because of physical barriers; 4. Stops are located to minimize traffic disruptions and to afford the driver a good field of view in front of and behind the vehicle; 5. When possible, stops are located to eliminate the need for children to cross the street or highway to board or leave the vehicle; 6. Either a bus monitor or another adult escorts children across the street to board or leave the vehicle if curbside pick-up or drop off is impossible; and, 7. Driver uses alternate routes in the case of hazardous conditions that could affect the safety of the children who are being transported, such as ice or water build up, natural gas line breaks, or emergency road closing.	Field Operations Director Transportation Coordinator Center Manager Bus Driver Bus Monitor	Field Operations Director Transportation Coordinator	September On-Going	Training Agendas Sign-In Rosters

HIDALGO COUNTY HEAD START PROGRAM
TRANSPORTATION PLAN
2017 – 2018

PERFORMANCE STANDARD: 1303.74 Procedures

GOAL: The Hidalgo County Head Start Program in coordination and collaboration with parents/guardians engagement will establish a plan to transport children in a safe manner.

OBJECTIVE: To implement a plan which includes an on-going safety education and certification program to include children, parents and drivers during the transportation process.

Task to be Accomplished	Person Responsible	Person Responsible for Monitoring	Projected Date of Completion	Documents or Forms
1. Parents of qualifying children will be provided with a set of bus safety rules and an acknowledgement form to sign. Parents will be provided training within the first thirty (30) days of the child's enrollment. 2. The program will evaluate each route to not exceed one (1) hour ride only if there is no shorter route or poses a safety concern. 3. Bus safety will be presented to all children at the beginning and throughout the school year in the curriculum's daily lesson plan. 4. The transportation plan will be developed with staff, parents and community members. 5. Drivers will receive required training and certifications to implement the safety of children. 6. Vehicles will be inspected daily as part of a preventive maintenance and cost control program. 7. Within the first thirty (30) day of the program year, children will be taught safe riding practices, safety practices for boarding and leaving the vehicles, for crossing the street to and from the vehicle at stops, recognition of danger zones around the vehicles and emergency evacuation procedures including participating in emergency/evacuation drill conducted on the vehicle the child will be riding. 8. Program will ensure that at least three (3) evacuation drills are conducted during the program year.	Field Operations Director Transportation Coordinator Center Manager Bus Drivers	Field Operations Director Transportation Coordinator Center Manager	Parent Orientation May of Current School Year (for following year) August thru May	Agendas Sign-In Forms Certificates of Completion Vehicle Inspection Report Behind the Wheel Driver Evaluation

HIDALGO COUNTY HEAD START PROGRAM
TRANSPORTATION PLAN
2017 - 2018

PERFORMANCE STANDARD: 1303.75 Children with Disabilities

GOAL: The Hidalgo County Head Start Program will make available appropriate number of buses or allowable alternate vehicles for transporting children with disabilities.

OBJECTIVE: To implement appropriate and safe transporting of children with disabilities to include, whenever possible, the inclusion of children with disabilities by transporting them in the vehicles as are non-disabled peers.

Task to be Accomplished	Person Responsible	Person Responsible for Monitoring	Projected Date of Completion	Documents or Forms
1. The program provides transportation to children with disabilities in appropriately equipped buses to their respective school district for services. The program will mainstreams children with disabilities by transporting them on the regular bus routes. Individual Education Plan (IEP) will reflect child's need for transportation and is accommodated with special adaptive equipment, if needed, including bus driver and monitor training.	Field Operations Director Transportation Coordinator Center Manager	Field Operations Director Transportation Coordinator	August thru May	Memorandum Budget Workshop
2. Children with disabilities needing therapy are transported to their respective school district to address special needs when the district does not provide services on site.	Center Manager Transportation Coordinator	Special Services Director	August thru May	Child's File Progress Notes

HIDALGO COUNTY HEAD START PROGRAM
TRANSPORTATION PLAN
2017 - 2018

PERFORMANCE STANDARD: 1304.2 Monitoring

GOAL: The Hidalgo County Head Start Program establishes and implements procedures for on-going monitoring of transportation services to ensure effective implementation of Federal Regulations.

OBJECTIVE: To manage the transportation services and ensure compliance with Federal Regulations/Performance Standards.

Task to be Accomplished	Person Responsible	Person Responsible for Monitoring	Projected Date of Completion	Documents or Forms
1. The Transportation Services Department Staff will participate in the programs annual self-assessment.	Administrative Team Consultants Center Staff Parents	Executive Director Assistant Directors Policy Council Members	As Schedule in Program Calendar	Protocol for the 2015-2016 Federal Review
2. The Center Manager and Transportation Staff will use the following procedure to ensure the on-going monitoring of the program's transportation services.	Center Manager Transportation Coordinator	Field Operations Director	Daily (Workdays)	Monitoring Form
•Pre/Post Trip Inspection Report-the Pre-Trip Inspection is conducted in the mornings before the bus begins the route to ensure the bus is safe and road worthy. The Post-Trip Inspection will be conducted at the end of the workday to ensure the bus is still in safe operating condition.	Bus Driver	Field Operations Director Transportation Coordinator	Daily (Workdays)	Pre/Post Inspection Report

HIDALGO COUNTY HEAD START PROGRAM
TRANSPORTATION PLAN
2017 - 2018

PERFORMANCE STANDARD: 1304.2 Monitoring - Continued

GOAL: The Hidalgo County Head Start Program establishes and implements procedures for on-going monitoring of transportation services to ensure effective implementation of Federal Regulations.

OBJECTIVE: To manage the transportation services and ensure compliance with Federal Regulations/Performance Standards.

Task to be Accomplished	Person Responsible	Person Responsible for Monitoring	Projected Date of Completion	Documents or Forms
•Bus Route Monitoring Report-The Center Manager and Transportation Coordinator will ride each bus, unannounced, a minimum of three times per school year to ensure all Federal Regulations are being met. A checklist will be used to ensure all required documentation is approved for all children being transported; all required safety equipment, such as, a Certified Fire Extinguisher with identifiable sign and mounted on bracket, well supplied First Aid Kit, Emergency blanket, bio-hazard material kit, seat belt cutter mounted away from children's reach.	Center Manager Transportation Coordinator Field Operations Director	Center Manager Transportation Coordinator Field Operations Director	PY 2015-2016	Bus Route Monitoring Report
•It will also ensure the observation of children being assisted when boarding and exiting the bus and the implementation of the approved Child's Safety Restraint System. It will also enable the monitor to observe the bus driver conduct a thorough check for any children or personal belonging left behind.	Center Manager Transportation Coordinator Field Operations Director	Center Manager Transportation Coordinator Field Operations Director	PY 2015-2016	Bus Route Monitoring Report

HIDALGO COUNTY HEAD START PROGRAM
TRANSPORTATION PLAN
2017 - 2018

PERFORMANCE STANDARD: 1304.2 Monitoring - Continued

GOAL: The Hidalgo County Head Start Program establishes and implements procedures for on-going monitoring of transportation services to ensure effective implementation of Federal Regulations.

OBJECTIVE: To manage the transportation services and ensure compliance with Federal Regulations/Performance Standards.

Task to be Accomplished	Person Responsible	Person Responsible for Monitoring	Projected Date of Completion	Documents or Forms
•Behind the Wheel Driver Education - The Field Operations Director and/or Transportation Coordinator will conduct the evaluation during the bus driver's interview to determine if the applicant is physically able to drive a bus and also observe if the driver is observing all Local, State and Federal Traffic Laws, including Railroad Crossing and avoiding wide right turns. The driver's respective Center Manager will conduct the same evaluation at the time of driver's annual performance evaluation.	Field Operations Director Transportation Coordinator Center Manager	Field Operations Director Transportation Coordinator Center Manager	Pre-Employment Annual Evaluation	Behind the Wheel Driver Evaluation

AI-59891 **Head Start** **16. D.**

CC - REGULAR

Meeting Date: 05/30/2017

Submitted For: Edmundo Garcia, HEAD START **Submitted By:** Linda Galaviz, HEAD START

Department: HEAD START

Information

CAPTION

Discussion/Approval of the Community Needs Assessment

BACKGROUND

Policy Council Approval: 05.17.17

Fiscal Impact

Attachments

Community Assessment

Form Review

Inbox	Reviewed By	Date
Budget & Management	Veronica Ortiz	05/19/2017 10:22 AM
Final Approval	Monica Salinas	05/26/2017 02:58 PM

Form Started By: Linda Galaviz Started On: 05/16/2017 09:39 AM

Final Approval Date: 05/26/2017



A Community Assessment of the Hidalgo County Head Start Program

Prepared in collaboration with:

Teresa Flores, Executive Director, Hidalgo County Head Start
Edmundo Garcia, Assistant Director for Operations, Hidalgo County Head Start
Nora Munoz, Assistant Program Director for Programmatic Services, Hidalgo County Head Start

By:

The University of Texas Rio Grande Valley
Data and Information Services Center (DISC)
Division of Research, Innovation, and Economic Development
Michael Uhrbrock, Economic Research Director
Sai Mullapudi, Business Economic Research Associate IV
(956) 665-2301, (956) 665-7185

May 2017

The University of Texas Rio Grande Valley

DISC

Table of Contents

Executive Summary....1

Overview of the Grantee....4

Overview of the Assessment Process....7

Service Area Map....8

Data and Analysis

- Profile of the Service Area....9
- Profile of Eligible Children and their Families....22
- Satisfaction with Head Start and Parents' Comments....31
- Other Child Development and Child Care Programs Serving Eligible Children....42
- Unmet Need for Services....43
- Children with Disabilities....45
- Needs of Eligible Children and Families....46
- Community Resources for Eligible Children and Families....50
- Community Strengths....54

Appendices

- Parent Survey....55

Executive Summary

Key Findings

Number of eligible children in the service area

- There are an estimated 14,831 eligible children 3-5 in Hidalgo County who are currently not receiving, but could be eligible for Head Start services. (Page 43).

Children experiencing homelessness

- A Point-in-Time survey conducted in Hidalgo County in 2016, identified 223 persons experiencing homelessness. Of those 223 persons, 21 where children 0-17. (Page 21).

Children in foster care

- There are 743 children (0-17) in foster care in Hidalgo County. (Page 21).

Children with disabilities

- ECI, which serves families with children 0-3 with disabilities and development delays served 1,721 children and their families in Hidalgo County. (Page 45).

- According to the Texas Education Agency, there are 1,426 children between the ages of 3 to 5 with a disability in public school. (Page 45).

Education, health, nutrition and social service needs of eligible children and their families

- According to Head Start parents, the top 5 concerns/needs in their communities are: unemployment (52.3%), crime (47.8%), juvenile offenders (36.3%), lack of health insurance (35.4%), and teenage pregnancy (25.3%). (Page 46).

- Head Start families expressed most interest and need for the following family services: asset building services (533), health education (373), English as a second language (335), adult education (320 parents), and parenting education (298). (Page 48).

Typical work, school, and training schedules of parents with eligible children

- The majority of two-parent and single-parent families receiving Head Start services have a parent that is employed. Two-parent families: one parent employed (64.7%), both parents employed (16.9%). Single-parent families: parent is employed (56.8%).

Other child development, child care centers programs that serve eligible children

- According to data from the Texas Education Agency there were 12,810 three and four-year olds who were enrolled in public pre-kindergarten programs in Hidalgo County in 2015-2016. (Page 42).

- A total of 7,443 children 3 to 5 receive child care services through Hidalgo County Head Start, Teaching & Mentoring Communities' Migrant and Seasonal Head Start, and Workforce Solutions' Child Care Management Services programs. (Page 42).

Resources that are available in the community to address the needs of eligible children and their families

- There is a network of agencies and community organizations that administer or provide programs to help low-income families and children with food, housing, health care, education and jobs in the communities in the service area. (Page 50).

Strengths of the community

- Community strengths: young population, growing economy, low cost of living, entrepreneurial spirit, Hispanic culture and heritage, quality schools and universities, natural resources, hospital and health care services, community-based organizations, social support network, etc. (Page 54).

Parent satisfaction

- Parents are satisfied with the Hidalgo County Head Start program. Ninety-eight percent (98%) said they were "very satisfied" or "satisfied" when asked about their satisfaction with Head Start. Satisfaction is also expressed by the positive comments about the program made by parents. (Page 31).

Recommendations

Services and Program Options.

- As indicated by the satisfaction scores, parents are satisfied with the services they are receiving. There are no recommended changes to the current center-based, full day, (5 days per week, 6 > hours per day) service being provided.

Recruitment Area for Grantee

- There is unmet need of 14,831 eligible children 3-5 for Head Start services in the existing recruitment/service area of Hidalgo County. There is no recommended changes to the recruitment/service area.

Locations of Centers and Facilities

- The existing locations of the Head Start centers are in close proximity to the existing communities of eligible children and families living in cities and rural areas of Hidalgo County. There are no recommended changes to the locations of centers.

Criteria for Recruitment and Selection

- Existing criteria for recruitment and selection is set to select the children and families with the greatest need for services. There are no recommended changes to the existing recruitment and selection criteria.

Overview of the Grantee

The Hidalgo County Commissioners' Court is the Grantee for the Hidalgo County Head Start Program (HCHSP).

HCHSP administers a Head Start grant that provides center-based services to eligible low-income preschool-aged children (3 to 5 years old) and their families in Hidalgo County.

Through its grant, HCHSP promotes school readiness of preschool-aged children and supports their growth and development in a positive learning environment through comprehensive services, which include:

- Education and Child Development Program Services: Children's readiness for school and beyond is fostered through individualized learning experiences. Through relationships with adults, play, and planned and spontaneous instruction, children grow in many aspects of development. Children progress in social skills and emotional well-being, along with language and literacy learning, and concept development.

- Health Services: Each child's perceptual, motor, and physical development is supported to permit them to fully explore and function in their environment, using a system of health and safety practices that ensure children are kept safe at all times. All children receive health and development screenings, nutritious meals, oral health and mental health support. Programs connect families with medical, dental, and mental health services to ensure that children are receiving the services they need.

- Family and Community Engagement Program Services: Parents and families are supported in achieving their own goals, such as housing stability, continued education, and financial security. Programs support and strengthen parent-child relationships and engage families around children's learning and development.

HCHS Services Snapshot	
Funded Enrollment	3,690 slots
Program Option	Center-based, Full Day, (5 days per week, 6 > hours per day)
Cumulative Enrollment	4,408 participants
Participants by Age	3 years old (53.9%), 4 years old (46.1%)
Families	4,051 families
Source: Office of Head Start, Head Start Services Snapshot, Hidalgo County Head Start Program (2015-2016).	

HCHP provides these services through a staff of 784 persons and a network of 40 centers, 1 administrative office, and 2 kitchens in Hidalgo County.

Hidalgo County Head Start Locations

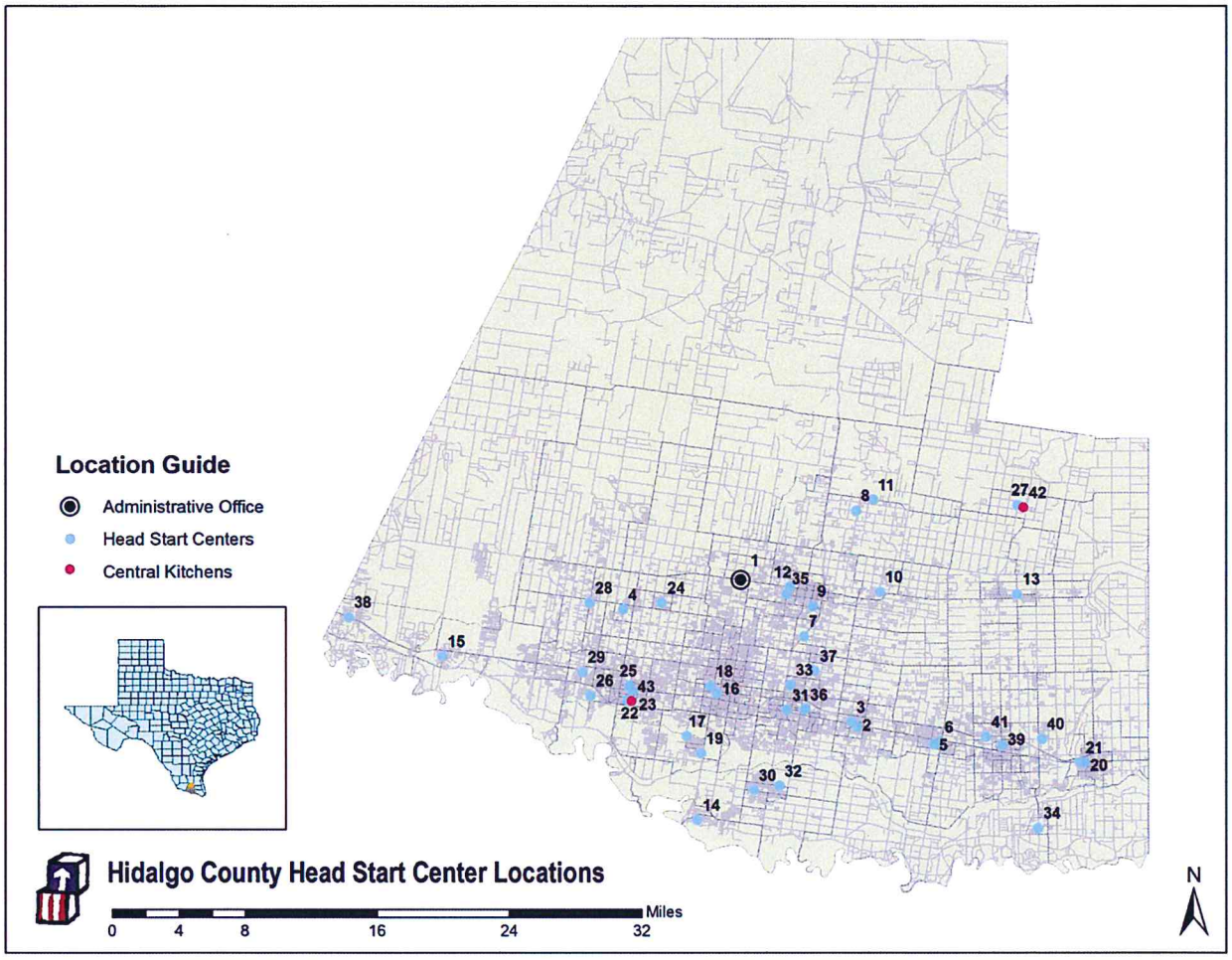

ID	HCHS Locations	Address	City	State	Zip
1	Administration Office	1901 State Hwy. 107	McAllen	TX	78504
2	Alamo H/S	303 S. 7th	Alamo	TX	78516
3	Farias Elementary	1100 W. Acacia St.	Alamo	TX	78516
4	Alton H/S	202 W. Dawes Ave.	Alton	TX	78572
5	Donna I H/S	1402 Silver Ave.	Donna	TX	78537
6	Donna II H/S	1715 Miller Ave.	Donna	TX	78537
7	Edinburg I H/S	225 South 25th St.	Edinburg	TX	78539
8	Edinburg II H/S	1200 North 1st St.	Edinburg	TX	78539
9	Edinburg III H/S	3817 Veterans Boulevard	Edinburg	TX	78539
10	Edinburg IV H/S	3215 Richardson Rd.	Edinburg	TX	78539
11	Edinburg V H/S	3500 East F.M. 2812	Edinburg	TX	78539
12	UTRGV H/S	1201 W. University Dr.	Edinburg	TX	78539
13	Edcouch H/S	201 N. Yellow Jacket Dr.	Elsa	TX	78538
14	Hidalgo H/S	607 South 5th St.	Hidalgo	TX	78557

15	La Joya H/S	105 E. 5th & Leo Ave.	La Joya	TX	78560
16	Austin (A-1) H/S	2100 Fir St.	McAllen	TX	78501
17	McAllen IV H/S	3900 S. Ware Rd.	McAllen	TX	78501
18	McAllen V H/S	2500 Laurel Ave.	McAllen	TX	78501
19	McAllen VI H/S	2601 Sarah Ave.	McAllen	TX	78502
20	La Herencia H/S	RR 3 Box 3059	Mercedes	TX	78570
21	Mercedes I H/S	1100 W. Expressway 83	Mercedes	TX	78570
22	Mission I H/S	115 Mayberry	Mission	TX	78572
23	Mission II H/S	1105 East 8th St.	Mission	TX	78572
24	Western Road H/S	8245 E. Poinsetta Dr.	Mission	TX	78573
25	Mission III H/S	3401 N. Mayberry	Mission	TX	78572
26	Mission IV H/S	301 S. Inspiration	Mission	TX	78574
27	Monte Alto H/S	25249 1st St.	Monte Alto	TX	78538
28	Palmview III H/S	1208 Paula Drive Rear (Unit 3)	Palmview	TX	78574
29	Palmview II H/S	618 N. Breyfogle Rd.	Palmview	TX	78574
30	Las Milpas I H/S	714 Zapata Ave.	Pharr	TX	78557
31	Pharr H/S Center	415 E. Clark	Pharr	TX	78577
32	Palacios Elementary H/S	801 E. Thomas Drive	Pharr	TX	78577
33	Longoria H/S	2500 N. Cypress	Pharr	TX	78577
34	Progresso H/S	109 W. Palm Ave	Progresso	TX	78579
35	San Carlos H/S	134 North 86	San Carlos	TX	78539
36	San Juan I H/S	200 North Cougar	San Juan	TX	78589
37	San Juan II H/S	601 Earling Rd	San Juan	TX	78589
38	Sullivan City H/S	379 E. Expressway 83	Sullivan City	TX	78595
39	Weslaco I H/S	310 N. Kansas St.	Weslaco	TX	78596
40	La Estancia H/S	3601 East Mile 8 North	Weslaco	TX	78596
41	Weslaco III H/S	1317 W. Expressway 83	Weslaco	TX	78596
42	Edcouch Central Kitchen	W. Hwy 107 and Mile 4 N.	Edcouch	TX	78538
43	Palmview Kitchen	1208 Paula Dr.	Mission	TX	78572

Overview of the Assessment Process

The community assessment was conducted using the five steps outlined in the "*Five Steps to Community Assessment: A Workbook for head Start Programs Serving Hispanic and other Emerging Populations*" published by the Office of Head Start. The five steps were: 1) Plan and Organize 2) Design Data Collection 3) Gather Data 4) Review and Analyze and 5) Write Report with Results and Recommendations.

Step 1: Plan and Organize

A CA work group was created to help develop and guide the CA. The work group consisted of the executive director, assistant directors and key program staff members.

Step 2: Design Data Collection

Using Head Start Policy and Regulations, *45 CFR Section 1302.11 Determining community strengths, needs and resources* on the type of information that the grantee is required to collect and analyze, and input from the CA work group, DISC developed a CA research plan to collect the data for the CA.

Step 3: Gather Data

DISC staff worked with the CA work group, to collect the data needed for the CA. The CA work group assisted in distributing the surveys and getting parents to participate, and gathering the information needed for the CA. A total of 2,222 surveys were completed by parents at Head Start centers using center computers. Parents were provided assistance in filling out the surveys as needed, and parents were given the option of filling out paper-based surveys. The surveys were in English and Spanish.

Step 4: Review and Analyze Data

DISC staff, along with the CA work group, analyzed the information collected for the CA. DISC analyzed the survey data collected using statistical software and created tables, charts and graphs to illustrate the data collected.

Step 5: Write Report with Results

Using the data analysis, DISC staff created the CA report. The CA report included data that the grantee is required to collect and analyze in the CA as stated in Head Start Policy and Regulations, *45 CFR Section 1302.11 Determining community strengths, needs and resources*.

Service Area Map

Hidalgo County

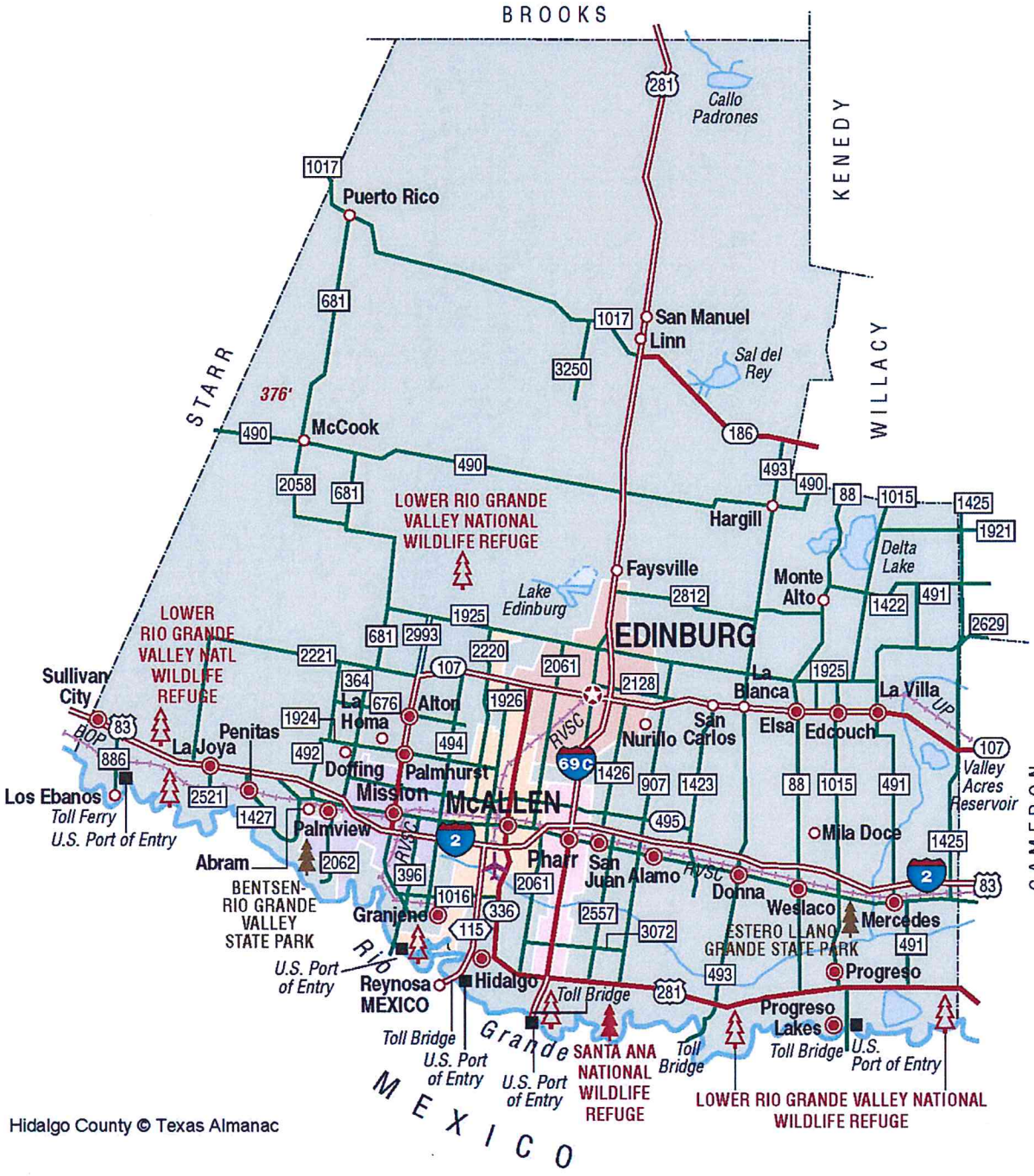

Hidalgo County © Texas Almanac

Data and Analysis

Profile of the Service Area

Using secondary data sources, DISC collected data on population, ethnicity, employment, education, income, public assistance, and health, nutrition, and social services for the service area of Hidalgo County.

Population

According to the U.S. Census Bureau American Community Survey, 2011-15, 5-year estimates, Hidalgo County has 819,217 persons.

Population	Total Population	Total Land Area (Square Miles)	Population Density (Per Square Mile)
Hidalgo County	819,217	1,570	521.5
Texas	26,538,614	261,250	101.5
United States	316,515,021	3,532,070	89.6
Source: U.S. Census Bureau, American Community Survey, 2011-2015.			

Hispanic Population

The population in Hidalgo County (91.0%) is predominately of Hispanic origin. Origin can be viewed as the heritage, nationality group, lineage, or country of birth of the person or the person's parents or ancestors before their arrival in the United States. People who identify their origin as Hispanic, or Latino may be of any race.

Hispanic Population	Non-Hispanic Population	Percent Population Non-Hispanic	Hispanic or Latino Population	Percent Population Hispanic or Latino
Hidalgo County	73,468	9.0%	745,749	91.0%
Texas	16,342,247	61.6%	10,196,367	38.4%
United States	262,282,816	82.9%	54,232,205	17.1%
Source: U.S. Census Bureau, American Community Survey, 2011-15.				

Population Change

From the 2000 to 2015, the population in Hidalgo County grew by 249,755 persons, or 43.8%, 3.3 times faster than the growth rate of the U.S. population (12.9%).

Population Change	Total Population, 2000 Census	Total Population, 2015 ACS	Population Change from 2000-2015 Census/ACS	Percent Change from 2000-2015 Census/ACS
Hidalgo County	569,462	819,217	249,755	43.8%
Texas	20,851,666	26,538,614	5,686,948	27.2%
United States	280,405,781	316,515,021	36,109,240	12.9%
Source: U.S. Census Bureau, American Community Survey, 2011-2015; Census 2000.				

Population Projections

The State Demographer with The Texas State Data Center, which produces the official population estimates for Texas and its counties, projects the population in Hidalgo County to grow 10.5% from 2015 to 2020, faster than Texas (6.9%) over the next five years.

Population Projections	Population, 2015	Population, 2020	Population Change from 2015-2020	Percent Change from 2015-2020
Hidalgo County	857,513	948,305	90,792	10.5%
Texas	26,947,116	28,813,282	1,866,166	6.9%
Source: Texas State Data Center, Population Projections Program, 0.5 scenario, http://txsdc.utsa.edu/Data/TPEPP/Projections/Index.aspx.				

Employment

Employment is a good indicator to examine to see if the local economy is growing or declining. Economies performing poorly will increase the need for public assistance, food and other government programs to help those in need. Employment in Hidalgo County grew 5.3% from 2012 to 2016, slightly slower than employment growth for Texas (7.2%) and the U.S. (6.2%).

Employment	Employment 2012	Employment 2016	Change 2012 to 2016	% Change 2012 to 2016
Hidalgo County	293,300	308,973	15,673	5.3%
Texas	11,818,675	12,671,801	853,126	7.2%
United States	142,469,000	151,436,000	8,967,000	6.2%
Source: U.S. Department of Labor, Bureau of Labor Statistics, LAUS, annual, non-adjusted.				

Unemployment Rates

Unemployment creates financial instability and barriers to access including insurance coverage, health services, healthy food, and other necessities that contribute to poor health status. Unemployment rates in Hidalgo County (7.8%) have steadily declined as the economy has improved, but are still higher than unemployment rates of Texas (4.6%) and the U.S. (4.9%).

Unemployment Rates	2012	2013	2014	2015	2016
Hidalgo County	10.6%	10.3 %	8.8%	7.9%	7.8%
Texas	6.7%	6.2%	5.1%	4.5%	4.6%
United States	8.1%	7.4%	6.2%	5.3%	4.9%
Source: U.S. Department of Labor, Bureau of Labor Statistics, LAUS, annual, non-adjusted.					

Median Family Income and Per Capita Income

In terms of income, Hidalgo County is among the poorest counties in the U.S. Both median family incomes and per capita incomes for the county are significantly lower than median family incomes and per capita incomes of Texas and the U.S.

Incomes	Median Family Income	Per Capita Income
Hidalgo County	$37,529	$14,689
Texas	$62,717	$26,999
United States	$66,011	$28,930
Source: U.S. Census Bureau, American Community Survey, 2011-2015.		

Poverty All Ages

Poverty information is at 100% of the federal poverty income guidelines. Poverty rates in Hidalgo County (34.2%) are significantly higher than Texas (17.3%) and the U.S. (15.5%).

Poverty All Ages	All Ages Persons	All Ages Poverty Rate
Hidalgo County	277,104	34.2%
Texas	4,472,451	17.3%
United States	47,749,043	15.5%
Source: U.S. Census Bureau, American Community Survey, 2011-2015.		

Children At or Below 100% Poverty

According to ACS data, 126,625 children 0-18 in Hidalgo County were living in poverty. Hidalgo County's child poverty rate was 45.9%, significantly higher than Texas (24.7%) and the U.S. (21.7%).

Children at or Below 100% FPL	Population Under Age 18	Population Under Age 18 in Poverty	Percent Population Under Age 18 in Poverty
Hidalgo County	275,760	126,625	45.9%
Texas	6,974,778	1,725,793	24.7%
United States	72,540,829	15,760,766	21.7%
Source: U.S. Census Bureau, American Community Survey, 2011-2015.			

Poverty Rate Change

According to the U.S. Census, the poverty rate remained unchanged in Hidalgo County (34.2%) from 2000 to 2015, while the poverty rate in the Texas (17.3%) and the U.S. (15.5%) rose.

Poverty Rate Change	Persons in Poverty 2000	Poverty Rate 2000	Persons in Poverty 2015	Poverty Rate 2015	Poverty Rate % Points Change
Hidalgo County	185,854	34.2%	277,104	34.2%	0.0
Texas	3,041,115	14.6%	4,472,451	17.3%	2.7
United States	31,581,086	11.3%	47,749,043	15.5%	4.2
Source: U.S. Census Bureau, American Community Survey, 2011-2015.					

Educational Attainment

Educational attainment is linked to positive health outcomes and higher wages for persons who graduate with an associate's degree, bachelors, or graduate or professional degree. Educational attainment in Hidalgo County is lower than Texas and the U.S.

Educational Attainment Persons Over 25	No HS Diploma	HS Only	Some College	Associates Degree	Bachelors Degree	Graduate or Professional Degree
Hidalgo County	37.9%	23.2%	17.4%	4.7%	11.9%	4.8%
Texas	18.1%	25.2%	22.5%	6.7%	18.2%	9.4%
United States	13.3%	27.8%	21.1%	8.1%	18.5%	11.2%
Source: U.S. Census Bureau, American Community Survey, 2011-2015.						

High School Graduation Rates

High school graduation rates are one measure of school districts performance and how they are preparing young children and adults for college and the workforce. Graduation rates for students receiving their high school diploma within four years in Hidalgo County (86.6) were slightly lower than Texas (89.6).

Graduation Rates	Student Cohort	Est. Number of Diplomas Issued	Cohort Graduation Rate
Hidalgo County	12,797	11,085	86.6
Texas	317,801	284,801	89.6
Source: U.S. Department of Education, EDFacts, 2014-15.			

Population with Limited English Proficiency

This indicator reports the percentage of the population aged 5 and older who speak a language other than English at home and speak English less than "very well". Hidalgo County (31.9%) had a higher percentage of the population with limited English proficiency than Texas (14.2%) and the U.S. (8.6%).

Population with Limited English Proficiency	Population Age 5+ with Limited English Proficiency	Percent Population Age 5+ with Limited English Proficiency
Hidalgo County	236,435	31.9%
Texas	3,486,872	14.2%
United States	25,410,756	8.6%
Source: U.S. Census Bureau, American Community Survey, 2011-2015.		

Population Receiving Medicaid

The percentage of the population with insurance enrolled in Medicaid assesses vulnerable populations which are more likely to have multiple health access, health status, and social support needs. The percent of insured population receiving Medicaid is high in Hidalgo County (46.2%) is twice as high as Texas (21.8%) and the U.S. (21.2%).

Population Receiving Medicaid	Population (For Whom Insurance Status is Determined)	Population Receiving Medicaid	Percent of Insured Population Receiving Medicaid
Hidalgo County	811,347	244,782	46.2%
Texas	26,062,431	4,519,485	21.8%
United States	311,516,332	57,557,806	21.2%
Source: U.S. Census Bureau, American Community Survey, 2011-2015.			

Receiving TANF

Temporary Assistance to Needy Families (TANF) provides general assistance to low-income families and children to meet their basic needs. Hidalgo County has 5,186 cases, or 22 percent of the total cases in Texas.

Receiving TANF	TANF Cases	TANF Recipients
Hidalgo County	5,186	14,565
Texas	23,491	57,494
Source: Texas Health and Human Services Commission, TANF data, March 2017.		

SSI Recipients (0-17)

Supplemental Security Income (SSI) is a federal income program to help aged, blind, and disabled people who have little or no income and provides cash to meet basic needs for food, clothing, and shelter. In Hidalgo County, 10,407 children 0-17 received SSI.

SSI Recipients Ages 0-17	Number	Rate per 1,000 Children Ages 0-17
Hidalgo County	10,407	38.4
Texas	146,148	20.4
Source: U.S. Social Security Administration and the Texas Health and Human Services Commission, 2014. Accessed through the Kids Count Data Center.		

Households with No Motor Vehicle

About seven percent of households in Hidalgo County (6.8%) have no motor vehicle. Households with no motor vehicle will need public or private transportation or family and friends to get to their doctor, agency appointments and work.

Households with No Motor Vehicle	Total Occupied Households	Households with No Motor Vehicle	Percent Households with No Motor Vehicle
Hidalgo County	224,021	15,148	6.8%
Texas	9,149,196	530,789	5.8%
United States	116,926,305	10,628,474	9.1%
Source: U.S. Census Bureau, American Community Survey, 2011-2015.			

CHIP Enrollment

The Children's Health Insurance Program (CHIP) provides medical coverage to low-income Texans. Enrollment in CHIP fell statewide from 2011-2015, in Hidalgo County (-44.5%) and Texas (-37.3%) due to funding and program changes.

CHIP Enrollment	2011	2012	2013	2014	2015	% Change 2009-2013
Hidalgo County	23,936	24,852	24,626	15,759	13,267	-44.5%
Texas	544,434	583,151	607,057	403,336	341,253	-37.3%
Source: Texas Health and Human Services Commission. Accessed through Kids Count Data Center.						

Uninsured Population

Lack of insurance is a primary barrier to healthcare access including regular primary care, specialty care, and other health services that contributes to poor health status. Hidalgo County has a high rate of uninsured persons with 34.7%.

Uninsured Population	Insurance Population	Number Insured	Number Uninsured	Percent Uninsured
Hidalgo County	811,347	529,686	281,661	34.7%
Texas	26,062,431	20,698,446	5,363,985	20.6%
United States	311,516,332	271,070,101	40,446,231	13.0%
Source: U.S. Census Bureau, American Community Survey, 2011-2015.				

Child Abuse

The number of child abuse cases in Texas decreased by 8.8% from 2012 to 2016. Child abuse cases have decreased in Hidalgo County (-49.3%) since 2012.

Child Abuse Cases	2012	2013	2014	2015	2016	% Change in Child Abuse Cases 2009-2013
Hidalgo County	2,685	3,098	2,144	2,165	1,361	-49.3%
Texas	64,344	66,384	66,551	66,697	58,627	-8.8%
Source: Texas Department of Projective and Regulatory Services. Data Book. Fiscal Years 2012-2016.						

Children 0-3 Receiving ECI Services

ECI is a statewide program for families with children, birth to three, with disabilities and developmental delays. ECI supports families to help their children reach their potential through developmental services. The percent of population receiving ECI services in Hidalgo County was 2.6%.

Children 0-3 Receiving ECI Services	0-3 Population	0-3 Children Served	Percent of Population Served
Hidalgo County	66,222	1,704	2.6%
Texas	1,637,681	51,332	3.2%
Source: Texas Department of Assistive and Rehabilitative Services, Division of ECI Services, FY2015 Data.			

Early Head Start Enrollment

The University of Texas Rio Grande Valley and Avance, Inc., administer Early Head Start programs in Hidalgo County. UTRGV has a funded enrollment of 372 slots and Avance, Inc., has a funded enrollment of 100 slots, for a total funded enrollment of 472 children and pregnant women.

Early Head Start Enrollment	Funded Enrollment
UTRGV	372
Avance, Inc.	100
Source: Head Start Services Snapshot 2016.	

Children Eligible for Free/Reduced Price Lunch

The percentage of students eligible for free/reduced price lunch in Hidalgo County (85.2%) was higher than percentages of children eligible for free/reduced lunch in Texas (60.1%) and the U.S. (52.4%).

Children Eligible for Free/ Reduced Price Lunch	Total Students	Number Free/ Reduced Price Lunch Eligible	Percent Free/ Reduced Price Lunch Eligible
Hidalgo County	220,534	187,925	85.2%
Texas	5,149,025	3,092,087	60.1%
United States	50,195,195	26,012,902	52.4%
Source: National Center for Education Statistics, NCES – Common Core of Data, 2013-14.			

Population Receiving SNAP

SNAP offers nutrition assistance to eligible, low-income individuals and families and provides economic benefits to communities. The percent of households receiving SNAP in Hidalgo County (32.1%) was more than two times as high as Texas (13.4%) and the U.S. (13.2%).

Population Receiving SNAP Benefits	Total Households	Households Receiving SNAP Benefits	Percent Households Receiving SNAP Benefits
Hidalgo County	224,021	71,890	32.1%
Texas	9,149,196	1,229,337	13.4%
United States	116,926,305	15,399,651	13.2%
Source: U.S. Census Bureau, American Community Survey, 2011-2015.			

Births

The number of births in Texas decreased by -5.2% from 2009 to 2013. Births in Hidalgo County (-3.6%) decreased as well, indicating a slight slowdown in annual births since 2009.

Births	2009	2010	2011	2012	2013	% Change in Births 2009-2013
Hidalgo County	16,948	16,398	16,101	16,301	16,059	-5.2%
Texas	401,599	385,746	377,274	382,438	387,110	-3.6%
Source: Texas Department of State Health Services, Center for Health Statistics, 2013. Accessed through Kids Count Data Center.						

WIC Program (Pregnant Women/Expectant Mothers)

WIC—The Special Supplemental Nutrition Program for Women, Infants and Children—is a health and nutrition program for low-income infants, children, and pregnant, postpartum and breastfeeding women who are at risk for nutrition-related illness. There were 8,707 pregnant women (expectant mothers) in Hidalgo County who were estimated to be eligible for WIC according to the Texas Department of State Health Services.

WIC Program (Pregnant Women/Expectant Mothers)	2015
Hidalgo County	8,707
Texas	154,818
Source: Texas Department of State Health Services, 2015.	

Births to Women Receiving Late or No Prenatal Care

Births to women receiving late or no prenatal care highlights a lack of access to preventive care, a lack of health knowledge, insufficient provider outreach, and/or social barriers preventing utilization of services. In Hidalgo County, 23 percent of the births to women received late or no prenatal care.

Births to Women Receiving Late or No Prenatal Care	Number	Percent of Total Births
Hidalgo County	3,770	23.0%
Texas	137,604	36.0%

Source: Texas Department of State Health Services, Bureau of Vital Statistics, 2013. Accessed through Kids Count Data Center.

Teen Births

Teen parents have unique social, economic, and health support services. High rates of teen pregnancy may indicate the prevalence of unsafe sex practices. The teen birth rate in Hidalgo County (79.2) per 1,000 population is more than double the teen birth rate in U.S. (36.6).

Teen Births	Female Population Age 15–19	Births to Mothers Age 15–19	Teen Birth Rate (Per 1,000 Population)
Hidalgo County	34,294	2,716	79.2
Texas	914,438	50,294	55.0
United States	10,736,677	392,962	36.6

Source: U.S. Department of Health & Human Services, Health Indicators Warehouse. Centers for Disease Control and Prevention, National Vital Statistics System. Accessed via CDC WONDER. 2006-2012.

Access to Primary Care Physicians

A shortage of health professionals contributes to access and health status issues in Hidalgo County (49.8), which has fewer primary care physicians per 100,000 population than Texas (68.7) and the U.S. (87.8).

Access to Primary Care Physicians	Total Population 2014	Primary Care Physicians 2014	Primary Care Physicians, Rate per 100,000 Pop.
Hidalgo County	831,073	414	49.8
Texas	26,956,958	18,511	68.7
United States	318,857,056	279,871	87.8

Source: U.S. Department of Health & Human Services, Health Resources and Services Administration, Area Health Resource File. 2014. Source geography: County.

Access to General Dentists

Like access to primary care physicians, residents living in the Hidalgo County (25.5) have access to fewer dentists per 100,000 population, than people living in Texas (54.1) and the U.S. (65.6).

Access to General Dentists	Total Population, 2015	General Dentists 2015	Dentists, Rate per 100,000 Pop.
Hidalgo County	842,304	211	25.5
Texas	27,469,114	14,857	54.1
United States	321,418,820	210,832	65.6
Source: U.S. Department of Health & Human Services, Health Resources and Services Administration, Area Health Resource File. 2015. Source geography: County.			

Adults with Diabetes

Diabetes is more prevalent among Hispanics; it may indicate an unhealthy lifestyle and puts individuals at risk for health issues. Compared to Texas, rates of the population 20+ diagnosed with diabetes is slightly higher in Hidalgo County (10.0%) than Texas (9.1%) and the U.S. (9.1%).

Diabetes (Adult)	Total Population Age 20+	Population with Diagnosed Diabetes	Population with Diagnosed Diabetes, Crude Rate	Population with Diagnosed Diabetes, Age-Adjusted Rate
Hidalgo County	514,763	49,932	9.7	10.0%
Texas	18,709,042	1,734,167	9.2	9.1%
United States	236,919,508	23,685,417	10	9.1%
Source: Centers for Disease Control and Prevention, National Center for Chronic Disease Prevention and Health Promotion, 2013.				

Obesity

Obesity may indicate an unhealthy lifestyle and puts individuals at risk for further health issues. Adults in Hidalgo County (34.4%) are considered more obese than Texas (27.9%) and the U.S. (27.5%).

Obese Adults	Population Age 20+	Adults with BMI > 30.0	Percent Adults with BMI > 30.0
Hidalgo County	514,631	177,033	34.4%
Texas	18,707,673	5,244,904	27.9%
United States	234,188,203	64,884,915	27.5%
Source: Centers for Disease Control and Prevention, National Center for Chronic Disease Prevention and Health Promotion. 2013.			

Mortality Rates

The highest mortality rates in Hidalgo County were from heart disease (116.4), cancer (97.2), and Ischemic heart disease (89.3).

Mortality Rates (Death Rate per 100K Population)	Cancer	Heart Disease	Ischemic Heart Disease	Lung Disease	Stroke	Accident	Suicide
Hidalgo County	97.2	116.4	89.3	15.6	21.9	11.0	5.4
Texas	145.4	151.2	91.4	36.8	35.8	13.1	11.6
United States	185.4	192.3	118.5	45.9	41.3	10.8	12.8
Source: Centers for Disease Control and Prevention, National Vital Statistics System. Accessed via CDC WONDER. 2010-14. Source geography: County.							

Crime Offenses and Rates

This indicator reports the rate of crime offenses reported by law enforcement; it is relevant because it assesses community safety. The crime rate per 100,000 persons for Hidalgo County was 1,977.5.

Crime	Murder	Rape	Robbery	Assault	Burglary	Larceny	Auto	Total
Hidalgo County								
-Offenses	17	122	129	416	1,517	2,699	303	5,203
-Rate Per 100K	6.5	46.4	49.0	158.1	576.5	1,025.8	115.2	1,977.5
Source: Texas Department of Public Safety, The Texas Crime Report for 2015.								

Special Populations

Special populations such as undocumented immigrants, children in foster care, inmates in jails, persons with substance abuse problems, domestic violence and homeless persons were examined as part of the community assessment. The percentage of teen births in Hidalgo County, which represented 14.1 percent of all births, was higher than the percentage of teen births in Texas at 9.8 percent. Hidalgo County also has a large undocumented immigrant population of 94,000 persons. Other indicators for special populations were below the state.

Special Populations	Hidalgo County	Texas
Teen Births (2013)		
Births to Teens 19 and Younger	2,264	38,030
Percent of Births	14.1%	9.8%
Child Abuse (2016)		

Confirmed Victims of Child Abuse 0-17	1,361	58,627
Rates per 1,000 Children 0-17	4.6	7.9
Foster Care (2016)		
Children in Foster Care 0-17	743	31,943
Rates per 1,000 Children 0-17	2.5	4.3
Family Violence (2007)		
Children in Family Violence Shelters 0-17	492	15,212
Rate per 1,000 Children 0-17	2.0	2.4
Alcohol Consumption (2012)		
Adults Drinking Excessively	72,665	2,879,956
Percentage of 18+ Population	14.1%	15.8%
Tobacco Usage (2012)		
Adults Regularly Smoking Cigarettes	59,318	3,005,954
Percentage of 18+ Population	12.0%	16.7%
Undocumented Immigrants (2015)		
Undocumented Immigrants Total	94,000	NA
Undocumented Immigrants 3-17 in School	13,000	NA
Homeless Population (2016)		
Number of Homeless Adults	202	NA
Number of Homeless Children (0-17)	21	NA
Inmates (2015)		
County Jail Population	1,285	59,218
Incarceration Rate Per 1,000 Persons	1.59	2.27

Profile of Eligible Children and their Families

The profile of eligible children and their families is from data gathered from the parent survey. A total of 2,222 parent surveys were completed.

Head Start Parents

Of the respondents, 98.8% were Head Start parents, and 1.2% were not Head Start parents. Persons who said they were not Head Start parents were legal guardians or grandparents.

Head Start Parent	2017	2013	2010	2007	2004	2001
Yes	98.8%	97.6%	98.7%	99.3%	99.4%	96.0%
No	1.2%	2.4%	1.3%	0.7%	0.6%	4.0%
	100.0%	100.0%	100.0%	100.0%	100.0%	100.0%

Gender

Females (89%) completed the majority of the surveys; 11% of survey respondents were male.

Gender	2017	2013	2010	2007	2004	2001
Female	89.0%	89.5%	86.3%	89.6%	88.3%	88.2%
Male	11.0%	10.5%	13.7%	10.4%	11.7%	11.8%
	100.0%	100.0%	100.0%	100.0%	100.0%	100.0%

Race

Ninety-six percent of the respondents were Hispanic, which is expected in a county where 91% of the residents are of Hispanic origin.

Race	2017	2013	2010	2007	2004	2001
Hispanic	96.1%	97.3%	95.3%	97.5%	98.1%	97.5%
White	3.2%	2.3%	4.3%	1.8%	1.3%	2.3%
Black	0.1%	0.1%	0.1%	0.1%	0.2%	0.0%
American Indian	0.0%	0.1%	0.0%	0.0%	0.1%	0.0%
Asian	0.1%	0.0%	0.0%	0.0%	0.1%	0.0%
Other	0.5%	0.3%	0.3%	0.6%	0.2%	0.2%
	100.0%	100.0%	100.0%	100.0%	100.0%	100.0%

Marital Status

Sixty-seven percent of the respondents were married, somewhat higher than the county average (60%). The percentage of single parents has steadily increased since 2001. In 2017, single parents represented 22.6% of respondents.

Marital Status	2017	2013	2010	2007	2004	2001
Married	67.6%	69.2%	72.7%	72.1%	70.8%	69.2%
Separated	6.2%	6.0%	6.4%	7.2%	8.9%	11.8%
Single	22.6%	20.7%	17.3%	15.8%	13.5%	10.1%
Divorced	2.7%	3.4%	3.1%	4.1%	6.1%	7.3%
Widowed	0.8%	0.7%	0.5%	0.8%	0.6%	1.7%
	100.0%	100.0%	100.0%	100.0%	100.0%	100.0%

Household Size

When asked about the size of their household, the answers varied from a 2-person household to a 10 or more person household. The average household size was 4.9 persons, compared to a countywide average of 3.6 people.

Household Size	2017	2013	2010	2007	2004	2001
2 persons	4.1%	1.5%	2.7%	3.5%	3.6%	3.5%
3 persons	11.8%	10.8%	10.6%	11.6%	12.3%	13.4%
4 persons	26.0%	24.3%	26.4%	27.2%	29.8%	26.9%
5 persons	26.5%	28.2%	27.4%	26.9%	28.1%	28.8%
6 persons	17.6%	18.0%	17.4%	15.8%	13.4%	13.8%
7 persons	7.3%	7.7%	7.3%	6.6%	5.6%	5.8%
8 persons	3.9%	3.5%	2.8%	2.5%	2.0%	3.4%
9 persons	1.7%	1.0%	1.1%	1.1%	0.6%	1.1%
10 or more persons	1.1%	1.3%	0.5%	0.7%	1.3%	0.0%
	100.0%	100.0%	100.0%	100.0%	100.0%	100.0%

Languages Spoken

The following tables show that more parents speak Spanish (98.7%), than speak English (49%). Sixty-nine percent of parents said that Spanish was spoken the most at home, compared to 29% who said English was most spoken at home.

Speak English	2017	2013	2010	2007	2004	2001
Yes	49.1%	54.7%	45.9%	49.2%	58.2%	65.5%
No	50.9%	45.3%	54.1%	50.8%	41.8%	34.5%
	100.0%	100.0%	100.0%	100.0%	100.0%	100.0%

Speak Spanish	2017	2013	2010	2007	2004	2001
Yes	98.7%	88.2%	89.1%	88.7%	87.1%	98.1%
No	1.3%	11.8%	10.9%	11.3%	12.9%	1.9%
	100.0%	100.0%	100.0%	100.0%	100.0%	100.0%

Speak Other	2017	2013	2010
Yes	0.8%	1.2%	0.5%
No	99.2%	98.8%	99.5%
	100.0%	100.0%	100.0%

Spoken the Most	2017	2013	2010	2007	2004	2001
Spanish	69.9%	56.8%	62.1%	58.6%	50.9%	60.1%
English	29.7%	19.3%	17.2%	18.5%	19.5%	30.3%
Both	NA	23.8%	20.7%	22.9%	29.5%	7.1%
Other	0.4%	0.1%	0.0%	0.1%	0.1%	2.4%
	100.0%	100.0%	100.0%	100.0%	100.0%	100.0%

Educational Status

According to the U.S. Census Bureau, 61% of people 25 years and over in Hidalgo County have a high school diploma or higher, and 17% have a college degree or higher. In the community assessment survey, respondents were asked about their educational level and that of their spouse. Responses varied from less than a 9th grade education to a postgraduate degree, but generally Head Start parents educational levels were lower than the general population in the county. Forty-seven percent of the survey respondents had a high school diploma or higher. The educational level of the respondents' spouses was lower, with 44% having at least a high school diploma.

Highest Education (Respondent)	2017	2013	2010	2007	2004	2001
Less than 9th grade	32.6%	34.9%	35.2%	35.2%	28.4%	25.1%
More than 9th grade, but no HS diploma	19.3%	16.8%	19.1%	17.3%	17.1%	19.2%
HS diploma or GED	24.0%	22.0%	21.4%	22.7%	25.3%	29.5%
Some college	16.8%	16.9%	17.0%	16.9%	18.9%	19.2%
Associate degree	1.7%	4.4%	3.6%	3.6%	5.1%	5.4%
College degree or higher	5.3%	4.5%	3.7%	4.4%	5.3%	1.6%
	100.0%	100.0%	100.0%	100.0%	100.0%	100.0%

Highest Education (Spouse)	2017	2013	2010	2007	2004	2001
Less than 9th grade	36.8%	39.5%	39.3%	40.9%	29.3%	30.1%
More than 9th grade, but no HS diploma	18.8%	19.7%	23.0%	21.7%	22.1%	22.5%
HS diploma or GED	21.2%	21.1%	21.6%	21.6%	25.7%	26.4%
Some college	17.3%	11.9%	10.8%	9.9%	14.3%	15.1%
Associate degree	0.9%	3.9%	3.2%	2.5%	4.8%	4.1%
College degree or higher	4.9%	3.9%	2.1%	3.5%	3.9%	1.3%
	100.0%	100.0%	100.0%	100.0%	100.0%	100.0%

Employment

Fifty-two percent of survey respondents were employed full-time, part-time, or seasonally, with about 26% of all respondents having full-time jobs. Of those respondents with spouses, 86.8% were employed, the overwhelming majority of these with full-time jobs (62.8%). The percentage of respondents and their spouses who were employed has steadily increased from 2004.

Employed (Respondent)	2017	2013	2010	2007	2004
Full-time	26.4%	27.4%	24.4%	28.9%	35.9%
Part-time	22.6%	20.0%	20.7%	20.7%	20.9%
Seasonally	2.9%	3.3%	2.7%	3.2%	2.1%
Not employed	48.0%	49.3%	51.9%	47.2%	41.1%
	100.0%	100.0%	100.0%	100.0%	100.0%

Employed (Spouse)	2017	2013	2010	2007	2004
Full-time	62.8%	58.5%	50.6%	67.1%	67.2%
Part-time	17.8%	15.9%	15.9%	11.7%	11.8%
Seasonally	6.2%	7.8%	8.4%	7.4%	4.7%
Not employed	13.0%	17.8%	25.1%	13.6%	16.1%
	100.0%	100.0%	100.0%	100.0%	100.0%

Income

Head Start uses federal poverty guidelines to determine eligibility for the Head Start program. According to reported incomes and household sizes, 100% of Head Start families were considered to be living in poverty according to the federal poverty guidelines.

Income (Annual)	2017
Less than $11,880	60.3%
Between $11,881 and $16,020	20.0%
Between $16,021 and $20,160	7.1%
Between $20,161 and $24,300	7.7%
Between $24,301 and $28,440	2.4%
Between $28,441 and $32,580	0.5%
Between $32,581 and $36,730	1.0%
Between $36,731 and $40,890	0.4%
More than $40,890	0.2%
	100.0%

Children Below 5

Respondents were asked if they had children under the age of 5 and, if so, how many. Eighty-nine percent of survey respondents have children between the ages of 0 and 5.

Children Below 5	2017	2013	2010	2007	2004	2001
Yes	89.0%	97.0%	94.3%	84.4%	86.1%	87.7%
No	11.0%	3.0%	5.7%	15.6%	13.9%	12.3%
	100.0%	100.0%	100.0%	100.0%	100.0%	100.0%

Fifty-one percent of survey respondents have one child below the age of 5. Twenty-seven percent have two children. Six percent have three or more children.

Number of Children Below 5	2017	2013	2010	2007	2004	2001
1	50.9%	37.0%	43.0%	39.5%	35.9%	38.6%
2	27.0%	21.3%	27.5%	24.3%	24.5%	25.0%
3 or more	6.7%	7.1%	9.8%	7.9%	7.1%	--

Health Insurance

According to the Texas Health and Human Services Commission and Texas Center for Health Statistics, thirty-four percent of persons living in Hidalgo County do not have health insurance coverage. In comparison, the majority of survey respondents (82%) reported they do not have health insurance. Only 2.7% of survey respondents reported that they had family health insurance coverage. Only 3.8% of the respondents said that their children were covered under CHIP (Children's Health Insurance Program).

It is important to note that the results of the survey are not straightforwardly comparable. However, as a means of sampling the Head Start population, the survey instrument serves as useful indicator of trends observed in the population services by the Head Start program in Hidalgo County.

Health Insurance	2017	2013	2010	2007	2004	2001
Yes	18.0%	25.3%	12.3%	10.9%	11.0%	26.1%
No	82.0%	74.7%	87.7%	89.1%	89.0%	73.9%
	100.0%	100.0%	100.0%	100.0%	100.0%	100.0%

Family Health Insurance	2017	2013	2010	2007	2004	2001
Yes	2.7%	5.8%	2.3%	2.6%	1.9%	44.1%
No	97.3%	94.2%	97.7%	97.4%	98.1%	55.9%
	100.0%	100.0%	100.0%	100.0%	100.0%	100.0%

CHIP	2017	2013	2010	2007	2004	2001
Yes	3.8%	7.2%	4.9%	4.4%	8.4%	19.9%
No	96.2%	92.8%	95.1%	95.6%	91.6%	80.1%
	100.0%	100.0%	100.0%	100.0%	100.0%	100.0%

Public Benefits

Several questions were asked regarding public benefits such as food stamps, Medicaid, TANF, and WIC, public housing, etc. Across the board, the majority of Head Start families receive food stamps (97.9%), WIC (75.0%), and Medicaid (97.3%). A smaller percentage of families receive public housing benefits (6.9%), TANF (19.3%), and social security (9.7%).

Receive Food Stamps	2017	2013	2010	2007	2004	2001
Yes	97.9%	87.6%	85.3%	76.8%	70.6%	59.5%
No	2.1%	12.4%	14.7%	23.2%	29.4%	40.5%
	100.0%	100.0%	100.0%	100.0%	100.0%	100.0%

Receive WIC	2017	2013	2010	2007	2004	2001
Yes	75.0%	72.1%	79.0%	66.0%	68.3%	73.7%
No	25.0%	27.9%	21.0%	34.0%	31.7%	26.3%
	100.0%	100.0%	100.0%	100.0%	100.0%	100.0%

Receive TANF	2017	2013	2010	2007	2004	2001
Yes	19.3%	26.2%	25.5%	21.5%	20.0%	15.2%
No	80.7%	73.8%	74.5%	78.5%	80.0%	84.8%
	100.0%	100.0%	100.0%	100.0%	100.0%	100.0%

Receive Medicaid	2017	2013	2010	2007	2004	2001
Yes	97.3%	85.8%	86.8%	84.3%	81.2%	63.4%
No	2.7%	14.2%	13.2%	15.7%	18.8%	36.6%
	100.0%	100%	100.0%	100.0%	100.0%	100.0%

Receive Social Security	2017	2013	2010	2007	2004	2001
Yes	9.7%	16.6%	10.8%	7.3%	7.5%	5.5%
No	90.3%	83.4%	89.2%	92.7%	92.5%	94.5%
	100.0%	100.0%	100.0%	100.0%	100.0%	100.0%

Receive Public Housing	2017	2013	2010	2007	2004	2001
Yes	6.9%	12.8%	11.4%	10.4%	10.2%	14.0%
No	93.1%	87.2%	88.6%	89.6%	89.8%	86.0%
	100.0%	100.0%	100.0%	100.0%	100.0%	100.0%

Housing

When compared with countywide data, respondents are behind in home ownership and certain basic home amenities. For example, only 32% of Head Start families own their home compared to the countywide average of 70%. Fifty-two percent of families have heating in their homes. Seventy-one percent of families have air conditioning. Twenty-nine percent of families lack complete kitchen facilities compared to only 1.4% of all county homes. Moreover, 28.9% of families lack complete plumbing facilities, compared to only 2.3% of all county homes.

Own Home	2017	2013	2010	2007	2004
Yes	32.8%	40.7%	30.0%	42.6%	43.5%
No	67.2%	59.3%	70.0%	57.4%	56.5%
	100.0%	100.0%	100.0%	100.0%	100.0%

Have Heating	2017	2013	2010	2007	2004	2001
Yes	52.4%	53.7%	48.7%	56.8%	59.8%	76.7%
No	47.6%	46.3%	51.3%	43.2%	40.2%	23.4%
	100.0%	100.0%	100.0%	100.0%	100.0%	100.0%

Have AC	2017	2013	2010	2007	2004	2001
Yes	70.9%	69.4%	67.1%	60.0%	64.3%	74.2%
No	29.1%	30.6%	32.9%	40.0%	35.7%	25.8%
	100.0%	100.0%	100.0%	100.0%	100.0%	100.0%

Have Kitchen	2017	2013	2010	2007	2004
Yes	71.0%	70.4%	69.6%	73.6%	73.8%
No	29.0%	29.6%	30.4%	26.4%	26.2%
	100.0%	100.0%	100.0%	100.0%	100.0%

Have Plumbing	2017	2013	2010	2007	2004
Yes	71.1%	67.8%	67.8%	71.2%	68.4%
No	28.9%	32.2%	32.2%	28.8%	31.6%
	100.0%	100.0%	100.0%	100.0%	100.0%

Telephone, Computer and Internet

Regarding technology at home, the number of homes surveyed with telephone service has increased from 2013 (61.0%) to 2017 (81.1%). The number of homes without telephone service is also substantially higher than the number of homes countywide that do not have telephone service (9.1%). Twenty-seven percent of homes have a computer at home; thirty-eight percent of homes have access to the internet.

Have Telephone Service	2017	2013	2010	2007	2004	2001
Yes	81.1%	61.0%	57.7%	66.9%	74.5%	88.8%
No	18.9%	39.0%	42.3%	33.1%	25.5%	11.2%
	100.0%	100.0%	100.0%	100.0%	100.0%	100.0%

Have Computer	2017	2013	2010	2007	2004
Yes	27.4%	41.2%	30.6%	23.9%	27.3%
No	72.6%	58.8%	69.4%	76.1%	72.7%
	100.0%	100.0%	100.0%	100.0%	100.0%

Have Internet	2017	2013	2010	2007	2004
Yes	38.4%	39.1%	23.0%	17.1%	18.9%
No	61.6%	60.9%	77.0%	82.9%	81.1%
	100.0%	100.0%	100.0%	100.0%	100.0%

Transportation

A majority of the families (79.6%) have their own transportation. Of those who own a vehicle, the majority (66.3%) have one vehicle. A concern is 20.4% of Head Start families do not have a vehicle for transportation. Those without a vehicle ask their friends and families for a ride or use a taxi or bus.

Own Vehicle	2017	2013	2010	2007	2004	2001
Yes	79.6%	85.0%	72.1%	77.4%	87.2%	86.8%
No	20.4%	15.0%	27.9%	22.6%	12.8%	13.2%
	100.0%	100.0%	100.0%	100.0%	100.0%	100.0%

Vehicles Own	2017	2013	2010	2007	2004	2001
1 vehicle	66.4%	66.8%	60.8%	62.5%	55.9%	63.4%
2 vehicles	31.5%	30.7%	20.2%	23.6%	27.5%	29.7%
3 or more vehicles	2.0%	2.4%	1.3%	1.5%	2.3%	---

Means of Transportation (no vehicle)	2017	2013	2010	2007	2004	2001
Ride family/friends	66.3%	72.0%	79.8%	77.1%	73.6%	80.9%
Taxi	2.1%	10.4%	2.0%	2.9%	5.0%	3.2%
Bus	3.7%	10.4%	2.6%	5.7%	9.4%	3.2%

Flooding

Thirteen percent of families reported that flooding was a problem in their community. This was a big decline from the 26% who said flooding was a problem in 2010, and is most likely due to weather and the improvements Hidalgo County has made to the drainage infrastructure.

Experienced Flooding	2017	2013	2010	2007	2004	2001
Yes	13.1%	13.8%	25.6%	17.3%	19.1%	8.6%
No	86.9%	86.2%	74.4%	82.7%	80.9%	91.4%
	100.0%	100.0%	100.0%	100.0%	100.0%	100.0%

Satisfaction with Head Start and Parents' Comments

When asked to rate the Head Start program, 98% of parents reported that they were "very satisfied" or "satisfied" with the services provided by the Hidalgo County Head Start program.

Satisfaction with Head Start	2017	2013	2010	2007	2004
Very satisfied	78.4%	78.2%	73.7%	66.1%	75.2%
Satisfied	19.5%	17.0%	22.4%	27.1%	21.2%
Neutral	1.7%	2.1%	2.1%	5.7%	2.3%
Dissatisfied	0.1%	0.1%	0.3%	0.1%	0.2%
Very dissatisfied	0.0%	2.6%	1.5%	1.0%	1.1%
	100.0%	100.0%	100.0%	100.0%	100.0%

Satisfaction with Hidalgo County Head Start is evident by the many positive comments that parents made about the program. Other comments and suggestions concerned the need for more transportation (La Joya) and more information.

Comments and Suggestions
A good program.
A mi me gustaria que los ninos aprendieran mas a leer y escribir.
A mi nino le ha serbido de la manera que se ha desenbuelto mas para comunicarce con los demas ninos y ha haprendido mucho para aprender numeros y letras.
A very good program.
Actividades deportivas a bajo costo para iniciar desde una temprana edad a los ninos paricipacion mas para eviar que caigan en adicciones.
Aqui en el centro de Pharr son excelentes con los padres y nuestros ninos. Los servicios sociales son excelentes tambien. Y es un programa bueno por que mis hijos a aprendido mucho.
Austyn's teachers are awesome! My son has learned so much. He loves coming! Thankyou!
Ayuda para la ciudadania clases.
Ayuda para la salud, gracias.
Buen programa, pero necesitamos bos para llevar a los ninos al hestar.
Bus transportation for the La Joya center is a big issue. Kids going to school late and getting home very late.
Bus transportation is a big issue in the La Joya Center. Need more buses so kids won't miss out in the education.
Buy new furniture such as tables, cubicles, etc.
Children learn a lot and enjoy the school.
Compranran muebles nuevo: mesas, busones, y etc.
Consider an extension to the Head Start of La Joya.
Contenta con Head Start porque esta aprendiendo mucho.
Continuacion de servicios de Head Start, son de gran ayuda.
Continue el programa de Head Start es de gran ayuda.
Continuen como siguen.

Crime-I am scared to get attacked any time due to what's going around. Child abuse-anyone can abuse a kid without us knowing. Teenager pregnancy- anyone can help but still up to the teen if she wants to take it. Juvenile offenders- anyone can say something cruel without knowing and do something bad to anyone.
Cuidan muy bien a mi nina y se a desarrollado muy bien.
Doy las gracias por el apoyo que nos brindan , al cuidar de nuestros hijos mientras estamos trabajando.
El Head Start es muy bien para los ninos aprenden mucho gracias.
El Head Start western alluda a muchas familias que nesesitan educacion para ayudar a sus hijos.
El program de Head Start es muy bueno para el aprendisaje de los ninos y estoy muy contenta con lo que mi nina a aprnedido en este tiempo que a estado en el Head Start.
El programa ayuda mucho alos ninos para cuando yaban a comenzar la escuela.
El programa de Head Start es muy complete y ayuda a qie los ninos esten mas preparados para la escuela.
El programa en si es muy bueno mi hija a aprendido mucho y a progresado demaciado.
El programa es muy bueno en lo personal estoy muy contenta por como a formado a mi hijo y el servicio del personal muy bueno.
El programa esta bien.
El programa muy gusta mucho.
En este Head Start solo hace falta que proveean bus a personas que no cuentan con un carro propio.
En la comunidad creeo y me atrevo a decir que nos falta mas ayuda adel precinto en cuanto a la seguridad de todos nuestros ninos. Alumbramiento, topes para reducer la velocidad en colonias y mas patrullaje serian unos ejemplos.
En lo personal me gustaria que hubiera mas empleos en los que no tenga uno problema por tener hijos. Cada que busco trabajo hago aplicaciones y en las etrevistas me preguntan que si tengo hijos y al decir que si me niegan el trabajo.
Enque estoy muy orgullosa de que sean unas buenas maestras con mi nina.
Es muy vuen centro de ducasion.
Esta muy bien el programa de Head Start porque ayuda mucho alas familias.
Esta muy bien la programa.
Esta programa esta bien.
Esta programa esta muy bien para me nino.
Esta programa esta muy bien.
Esta programa me gusta mucho pare mi ninos.
Esta satisfecho con el trabajo que estamos haciendo, no tengo quejas.
Estamos contentos con la educcion y el trato que recive mi hija. Eya esta contenta por venir a la escuela.
Estamos muy felices con el programa.
Estoy muy agradecida con el condado por recibi a mis hijos y ayudarme con su educacion.
Estoy muy agradecido con todo el personal de Head Start porque es un programa que ayuda a desarrollar la mente de todos los ninos a una temprana edad y los prepara para sus estudios superiors. Nosotros como padres sabemos que a veces es dificil trabajar cn ninos y es por eso que me siento agradecida con todo el personal porque se que nuesros hijas son tratados muy bien.
Estoy muy conforme con el programa de Head Start. Mi hija ha aprendido mucho.
Estoy muy contedo con la programa.
Estoy muy contenta con la comunicacion que existe entre los maestros y los padres.
Estoy muy satifecho por ver como aprende mi hija y la estan educando excelentement. Sigan con este

programa porque los niños aprenden mucho y ya van bien avanzados para la escuela y es una gran ayuda para los padres que tenemos que saliar a trabajar. Gracias.
Estoy muy satisfecha con el programa de Head Start y con sus maestras.
Estoy muy satisfecha con la capacitacion de los maestros y su exelencia en el cuidado y educacion de los ninos.
Estoy muy satisfecha con la escuelita de mi hijos, lo unico que quisiera que pusieran banos en los salones para que los ninos no tengan que salir al interperie al bano, mas cuando hace frio. Pero de ahi en adelante todo me gusta. Gracias.
Estoy muy satisfecha con lo que mi nina a aprendido en estos 5 meses estoy muy feliz porque save conta las figuras y colores. Muchas gracias.
Estoy muy satisfecho con el programa.
Estoy muy satisfecho con este programa felicidadesz al creador de dicho programa. Gracias por su ayuda.
Estoy satisfecha con el programa de Head Start.
Estoy satisfecho con el programa.
Estoy satispecha con los programas que tebeb para os ninos, eos dirve de mocha ayuda pars los padre que queremos estudiar p pare trabjar u no tenemos quten nor cuide a nestros hijos.
Estubo muy bien su encuesta. Me gustaria que estuviera mas alumbrado en nuestra comunidad.
Everything good. Very convenient program for the children.
Everything is all right.
Everything is fine.
Everything is fine, thank you.
Everything is fine, =the bad thing is that the bus does not notify when it arrives (honk).
Everything is fine, excellent service.
Everything is good.
Everything is good.
Everything is great.
Everything is so far good.
Excellent program.
Excellent support in developing my child's abilities.
Excellente programa.
Felicidades por su desempeno en hacer possible que todo funcione lo major posible.
For there to be a better organized parking during school hours.
Good job.
Good job. Thanks.
Good program.
Gracias.
Gracias.
Gracias por el apoyo que nos brindan.
Gracias por el programa de Head Start. No tengo sugerencias poeque estan muy capacitados en todo.
Gracias por el servisio de Head Start. Ecelente capacidad.
Gracias por la programa. Les ayuda much a nuestros hujos.
Gracias por seguir preocupados por la educacion de nuestro hijos.
Gracias por su programa.
Gracias por tener maestros tan pacientes con los ninos y sobre todo muycvapacitados para cuidar a los ninos.

Gracias por todo que hacen por mi hijo.
Great program.
Hacer reconocimient a su excelente labor se lo que quiero hacerles saber. Gracias.
Have school buses.
He visto el avance generado en mi hija.
Head Start deve tener tranporte para todos igual.
Head Start has been a very good experience in many ways. Thank you.
Head Start is a good program.
Head Start is a very good program. I loved it.
Head Start is an excellent program!
Head Start is an excellent program. Their teachers teach our children a lot. Thanks.
Head Start is good program for kids.
Head Start program is very important. It helps our children to start developing on all areas of needs for their development.
Head Start has helped my daughter to gain and learn skills to help her in public school. I am very satisfied with the program.
Help to educate children.
Here where my child attends....it needs a lot of work outside with building and playground.....staff n teachers are excellent...
I am completing satisfied with the education my son is receiving through Hidalgo County Head Start program. This service helps families and it is awesome.
I am grateful because my three children had been in this program. Thank you for your support this past two years. This is a great opportunity for immigrant families that don't speak English. It's something that I appreciate among many things. Thank you very much.
I am happy with this program they have really helped my little girl.
I am satisfied with the Head Start program. The only thing is the transportation. I would like two buses so that the children are early in the afternoon. Thank you.
I am very grateful that my son had the opportunity to learn a lot with the amazing teachers that took time to teach him. Amazing Head Start program and amazing staff!
I am very happy with the care that they provide my child at the Head Start program.
I am very happy with the program because it helps me a lot.
I am very happy with this program. This program provides the best education any preschooler could have.
I am very pleased with all the services I get from Head Start.
I am very pleased with the Head Start program. Both of my younger children have been involved in. Head Start educators are the best!
I am very satisfied and content with the services provided for my child. Thank You!
I am very satisfied in the way that my children are learning real quick.
I am very satisfied with Head Start.
I am very satisfied with the Head Start program in my area.
I am very satisfied with the services of the Head Start program. 100% recommendable.
I am very satisfied with the teachers this year. My daughter Joelynne has improved a lot throughout the year. Most important is that I know she was in good hands. Thank you!
I am very satisfied with the Head Start program because my children have learned the values that will serve them for a good future.
I believe this program is helping little ones to get prepared for when they face the real world out

there (public school).
I like the activities that take part in the meetings, helps us spend time with the family.
I like the way my son is educated. I would like my son to have more activities at school. I am very satisfied.
I love my son (Adyn Russell's) educators.
I love the Head Start Program. Very nice teachers and staff. My children have really improved in their education. Just love it.
I love the staff. The teachers are great.
I love Head Start.
I loved this program.
I wish there were two buses, so that there was only one route and the children arrived earlier to have a good breakfast.
I would like more activities for the children.
I would like to have a parent-teacher conference monthly on the child's improvements.
I would suggest to allow parents to be more involved with their children during education time and spend a whole day of lessons with them.
I am very happy with Head Start and very happy with the teachers. My child has improved a lot. Thank you so much for teaching my child and may God bless you.
More information about about kids daycare on summer.
Informacion sobre proramas de bajo costo para ninos y adultos.
It is very difficult to have medical insurance in Hidalgo County. Parents need to be more involved in the education of the children of Head Start.
It's a great program for the community.
It's a good program.
It's a great program for the community.
It's a great program.
It's a very good program.
It's a wonderful program.
Job well done. More effort to get more parents involved.
La programa esta muy bien.
La atencio que le dedican a los ninos.
La atencion en el programa head star es lo major en cuanto lo que ofrecen a nuestros hijos, les brindan seguridad y tambien a nosotros como padres ya que es satisfactorio saber que nuestros hijos estan en buenas manos. Necesitamos ayuda los padres en cuato a como poner en practica los estudios terminados en otro paiz aqui en los estados unidos.
La joya center has a bus transportation issue. They need more buses.
La programa esta bien.
La programa esta muy bien para los ninos.
La programa esta muy bien.
Lack of light at night, the streets are very dark.
Las maestras de el #8 son muy amables y mija a aprendido mucho con ellas.
Las maestras y trabajadores del Head Start western son muy amables y les ayudan mucho alos ninos. Estoy muy contenta.
Le doy gracias al programa por darnos la oportunidad de ayudarnos con nuestra familia pare capacitor los hijos y darnos el tiempo para poder trabajar.
Lo que no me gusta es que cuando tiene eventono aceptan ninos.

Los ninos aprenden, inuclucran a los padres y recibimos apoyo.
Many thanks for the support with the children and the understanding with the parents.
Mas apoyo de la directora para el comite de padres.
Mas areas recreacionales para ninos.
Mas clases de ingles y para hacer el GED.
Mas enfasis en que los ninos no hablen con extranos.
Mas fuentes de salud para ninos fisicos y vacunas gratis para personas q no cuenten con seguro medico.
Mas informacion para la comonidad de los programs accesiblas, para la major educaccion de nuestros hijos.
Mas informacion para los adolecentes de drogas y prebencion de embarazos en adolecentes.
Mas informacion sobre salud mental, necesidades especiales para ninos.
Mas paciencia con los ninos especiales se que no es facil pero me gustaria ...gracias.
Mas seguridad en parques en los becindarios.
Mayor communicacion por parte de las maestras acerca del avance de mi hijo, no solo quejas. Dios les bendija.
Me encanta el programa del Head Start.
Me encanta este programa a aportado a mi familiar mucha ayuda y sobre todo la educacion a mis hijos.
Me gusta mucho la programa de Head Start.
Me gusta como educan a mi hijo y ami me gustaria que mi hijo tuviera mas actividades en la escuela. Estoy satisfecha.
Me gusta el avance de mi nina.
Me gusta el programa.
Me gusta el trabajo de las maestras y las ensenansas que le poven a los ninos.
Me gusta la atencion que se les brinda a los ninos. Es muy buena.
Me gusta la programa del cuidado de los ninos in esta escuelita gracias.
Me gusta los actividades que dan en el Head Start para pasar un tiempo como familia.
Me gusta mucho el programa.
Me gusta mucho la programa de Head Start.
Me gusta mucho la programa.
Me gusta que aqui en Western Road. Los ninos aprenden mas, se hacen independientes. Tambien nos dan mucha informacion a nosotros de papas, y el personal de este centro es muy amable.
Me gustaria que el centro de Head Star tuviera mejores ares de juegos para los ninos en la parte de los patios y estubieran protejidos para sol o lluvia.
Me gustaria que el Head Start de mis hijos tuviera semento enfrente.
Me gustaria que hubiera cursos tecnicos para poder ahorrar en nuestras casas gastos de reparaciones pequenas, en nuestras casas, como reparar una pared de un golpe pequeno, un cano tapado etc.
Me gustaria que hubiera mas programas donde los ninos participaran mas en hacer ejercicio; que su capacidad fisica y mental se enfocaran tambien.
Me gustaria que las mamas tengamos a oportunidad de aprender o estudiar algun oficio y podamos tener un lugar donde nos cuiden a lo ninos durante ese tiempo y asi tener mas probavilidades de optener un trabjo o iniciar un negocio propio.
Me gustaria tener mas programas que ensenen o den clases cerca de mi comunidad para las personas como ged gratis.
Me gustaria ver algun dia que la maestras de Head Start se les aumente el sudldo a uno mas

adecuado teniendo en cuenta elsulldo de lies aumente el sulto por el costo de vida.
Me gusto la encuesta.
Me han ayudado mucho con el progreso de mi hijo.
Me han servido de mucho las juntas y huvo mucho cambio bueno hacia mi nino pero lo que quisiera esque huviera transp[orte.
Me parece que hace falta mas limpieza en los banos, ya que se ve que tienen sarro y algunas tazs de basn las he visto manchadas de escremento, y es el bano al que van todos los ninos.
Me quedo bien satifecha con la educacion.
Me siento satisfecha con el desempeno de las maestras gracias.
Menos violencia en las calles y transporte para los ninos de la escuela.
Menu de comida mas nutritivas y diversas para los ninos. Mejoea en las instalaciones; se ve muy descuidado el edificio necesitan mayor organizacion y comunicaction entre las organizadoras de las actividades o festivals que se realizan durante el ano.
Mi hija a aprendido a combibir con ninos y no ser timida. De salud me gustaria saber mas pero que fuera temprano ya que en la tarde no puedo asisitir por las terapias de mis hijos. Me gustaria saber como poder ayudar a nuestro ninos para expresarse majo en lugar de lolo llorar se sientan mas seguros de expresar y dercir todo.
Mi hija a aprendido mucho este ano escolar con la ayuda de Head Start del condado Hidalgo.
Mi hija ha aprendido much mas de lo que se espera para su edad.
Mi hija ha aprendido mucho desde que empezo el ciclo escolar. Todo esta muy bien tanto la educacion nutricion y aun mas los servicios sociales.
Mi hijo a aprendio mucho, a incrementado su lenguaje.
Mi hijo ha aprendido mucho, aqui en el centro habla mas, se interesa por los libros y se que es bueno. Necesitamos autobus para la escuela, falta transporte.
Mil gracias.
More information on GED classes for parents.
More lighting for the streets at night, my area is very dark. Also more attention to the streets due to bumps.
More outside stuff for kids.
More programs to educate parents in our community.
Motivate the students to go to college.
Muchas gracias por el apoyo con los ninos y la compreucion con los padres de familia.
Muchas gracias por el programa.
Muchas gracias por sus servicios.
Muchas grasias por involucrarnos con nuestros hijos en las escuelas y ue tambien podamos participar.
Mucho gusto en la programa.
Muy satisfecha con los servicios de programa Head Start.
Muy buen.
Muy buena atencion con los ninos y lo que ellos aprenden.
Muy Buena programa.
Muy Buenos aprenden mucho.
Muy buenos servicios del Head Start par los hijos.
Muy contenta con el programa.
Muy contenta con los servicios de Head Start.
Muy satisfecha con el programa.
Muy satisfecha con el programa de Head Start.

Muy satisfecha con Head Start por tanto que aprendido y la buena estancia.
Muy satisfecho con el Head Start.
Muy buena el programa.
My child is diagnosed with autism this is his 2 year @ Head Start form not saying no word he now knows his name, color, numbers. etc.
My daughter has learned so much. The program provides lots of information to parents.
My kids enjoy being in the Head Start program. Everyday they learn new things. Thanks for having Head Start.
My son keep learning more.
Myself and child are very satisfied about the Head Start program. It's helped him improve in many aspects.
Necesitamos transporte.
Necesitan mas actividades donde los padre podamos estar mas en comunicacion con los maestros ya sea juntas u otras actividades gracias.
Necessitan mas ayuda con transportation.
Todo se trabaja muy bien.
Very satisfied with staff and program.
No parking. Kids deserve a better school. Letting the kids take any kind of backpacks.
I'm very satisfied with the services provided for my son.
Estoy muy satisfecha con la atencion que le dan a los ninos.
No tengo que paga para mi nino.
Todo es muy bien. Muchas gracias.
Everything is good.
Everything is fine with me.
Everything is good.
On the bus we know that it is not mandatory, but as long as they have a bus they should work every day. The bus drivers are missing a lot and that harms the education of the children.
Para mi todo esta muy bien. Gracias.
Pleased with the program.
Por el momento ningun comentario.
Por mi experencia puedo dicer que estoy mas que satisfecha con el programa de Head Start.
Program has helped my child learn.
Programas aser como preparer alimientos saludables para la familia como clases y de economia y ayudas para reparacion de bibiendas.
Provide bus in my area. It's not fair to parents that can't get bus because there's a "Dead End". Other school buses come to stop sign. I can drop them off there. It's too much $ spent for gas to be dropping and picking up.
Pues el programa es un gran apoyo en mi familia debido al tiempo de servicios ya que mi trabajo esta retirado y yo tengo que viajar en autobus. El desarollo que mi hijo esta teniendo estoy muy satisfecha. Me gustaria ver mas actividades comunitarias para os ninos.
Pues yo les doy las gracias a cada persona por apollarnos y darnos su tienpo mas que nada compartir con todos cada decision al respeto gracias.
Que agradezco al Centro de Western Road, la informacion que nos dan, ayuda mucho a las familias, de las clases de nutricion, asesoria legal de inmigracion y clases de ser mejor padres.
Que consideren una ampliacion al Head Start de La Joya.
Que estoy muy agusto en pertencer a este grupo en el cual esta mi hija porque me dan mucha

confianza en dejarla con ellos.
Que estoy muy sastifecha con el programa del Head Start.
Que estoy muy satisfecho con el programa de Head Start. Muy buenas maestros y personal.
Que existan clases de natacion es muy importante que los ninos sepan nadar.
Que Gracias a las maestras de Head Start. Mi Nina a aprendido muncho.
Que Head Start nos provea transportacion para todos los ninos.
Que hubia un poco mas de cobertera en el ruta del bos, muchas de los padres batallmos un poco por el transporte.
Que hubiera transporte al centro.
Que hubiera transporte en el Head start.
Que las juntas fueran an las tares para que mas padres vinieran.
Que le pongan un poco mas aencion a los ninos que tienen ADHD porque mi hijo tiene ese problema.
Que menos raicismo hacia los indocumentados de parte de la policia y que halla mas programas de ingles.
Que se nos informa a los padres, donde y cuando podemos acudir para que tomemos clases de ingles y que le ensenen el idioma a los ninos porque al entrar a la escuela ellos van a tener problemas para comunicarse. Muchas gracias.
Que sigan con esta gran ayuda que nos estan brindando, y que nos digan como ayudarlos.
Que sigan igual con el programa de Head Start.
Que wetoy muy contenta por la dispoccion tonto de las maestras como de todo el personal de Pharr Head Start.
Que se integren en lo possible los padres general en la educacion de sus hijos para que asi el nino pueda sentirse valorado y con entusiasmo de aprender.
Raise hourly wage.
Really like the Head Start program because it teaches my child stuff that she is going to need to know when she starts normal school.
Satisfecha con el programa.
Satisfecha con el programa y los maestras del Head Start.
Satisfecha con el programa, que no lo quiten.
Satisfecha con la educacion que le estan dando a mi hijo muy buen personal, buenas maestras que nos ayudan con la educacion de nuestros hijos.
Satisfecha con el programa.
Satisfecho con todo.
Se esta adaptando con los ninos para cuando empiese la escuela.
Se necesita transporte para todos los ninos del programa de Head Start.
Sigan Asi!!! Solo muchas gracias por sus atenciones com mi hija. Muchisimas gracias.
Sin palabras, y muy agradecida con el programa mis ninas an tenido un gran desarrollo y an apprendido munchas cosas.
Sobre el bus sabemos que no es obligatorio pero mientras tengan bus deberian pasar todos los dias y los boseros faltan mucho y eso perjudica la educacion de los ninos.
Solo dar las gracias por este progeama que tanto les ayuda a los ninos y gracias a las maestras por el aprendizaje y apoyo que le dan a los ninos.
Solo darles las gracias por toda la paciencia con nuestros hijos, yo estoy muy agradecida proque mi nina aprendio bastante, gracias.
Some teachers need to have more patience.
Staff is doing great job with the children.

Sugiero que abran las puertas del Head Start mas temprano por lo cual muchos de los padres entramos a trabajar a las 8:00 a.m.
Tener oportunidades para mas ninos en cada Head Start.
Thank you.
Thank you for being a good teacher to my son.
Thank you for doing a good job with our children and keeping in a positive track by being such good teachers to them.
Thank you for your program.
Thank you for your services!
Thank your for providing community service.
That is a great opportunity for are kids for early learning.
That mothers participate once a week each in class with teachers, and that is bilingual to learn more the language.
The attention that they dedicate to the children.
The child is becoming more involved with other children and does more different things.
The facility is very helpful and very kind keep up the good work.
The Head Start staff is friendly and helpful with the parents, they always help and are kind.
The Head Start program has really helped us out with our kids. They have shown great improvement and it really shows.
The Head Start program is really great. It's a huge help not paying child care services.
The Head Start program is very good for children's learning. I'm happy with what my girl has learned in this time in Head Start.
The only concern I have is that there should be some form of transportation for children who's parents vehicles have broken down or any kind of mechanic work. So our children don't miss any school and or affect in any way.
The program helped my son to get along with other children and to talk a little more.
The program is a great benefit for my child.
The program is excellent.
The program is great.
The program is very good for my child.
The program is very good. I like the new thing that my child is learning. I like the parent classes.
The programs lack more promotion or information to take advantage of the programs offered by the county.
They are a very good team. Teachers put all their efforts in teaching children.
They need more buses in La Joya center.
They need to provide more bus transportation in the La Joya center.
This is a good program for the low-income families.
This is a good program.
This is a very good program.
This is good program.
This program is very good.
Todo bien nomas mi nino no le gusta su miestra.
Todo el personal son muy amables pero mas las maestras de mi hijo.
Todo es exelente servivio en Head Start.
Todo esta bien estoy agusto y todo esta bien con los programas que tenemos.
Todo esta bien, estoy contenta con lo que le ensenan al nino.

Todo esta muy bien.
Todo esta muy bien me gusta mucho los maestros y todo los que participant.
Todo esta muy bien me siento muy agusto de que mi hija este recibiendo educacion de head star por que veo su avance a pesar de su corta edad y todo el personal siempre son muy hamables.
Todo me parese satisfactorio en cuanto al programa de educacion con los ninos y padres, saber que cuentas con maestros capacitados para la educacion de nuestros hijos y ayudarnos ha relacionarnos mejor en su crecimiento y educacion me doy por satisfecha y l agradesco ha los maestros por su profecionalismo.
Todo muy bien.
Todo muy bien. Exelente servicio.
Todos son muy amables y te atenden excclentemente gracias.
Transportation for the La Joya Head Start. With just one bus route, kids are getting home and school late. They need more buses in the center.
Un buen programa.
Very satisfied.
Very satisfied with my daughters' teachers and staff. Thank you so much for what you do.
Very satisfied with the Head start program.
Very satisfied with the Head Start program. I know my daughter will be ready when she goes into public school because of it.
Very satisfied with the Head Start program. Benefits both children and parents.
Very satisfied with the Head Start. Not only does it benefit my children but as parents as well. It gives me the opportunity to attend school.
Very satisfied with the program. Thank You!
Volunteers after work hours (5 p.m.) for parents who work full time.
We are very grateful and satisfied with the Head Start program that our son attends.
We enjoy the program.
Would appreciate a week notice on any events going on in school to prepare our child for it
Yes, the program is very helpful and educated for my child.
You all doing great.

Other Child Development and Child Care Programs Serving Eligible Children

According to data from the Texas Education Agency there were 12,810 three and four-year olds who were enrolled in public pre-kindergarten programs in Hidalgo County in 2015-2016.

County and Age	2011-2012	2012-2013	2013-2014	2014-2015	2015-2016
Hidalgo County					
3-Year Olds	593	788	857	1,323	1,410
4-Year Olds	11,387	11,466	11,654	10,867	11,400
Total	11,980	12,254	12,511	12,190	12,810
Source: Texas Education Agency.					

Other Child Care Providers

According to data from the Texas Department of Family and Protective Services, there are 409 licensed child care centers, 73 licensed child care homes, and 66 registered homes providing child care services in Hidalgo. These child care providers have the capacity to serve 32,133 children.

Child Care Providers	Hidalgo County
Licensed Child Care Centers	
Number	409
Capacity	30,507
Licensed Child Care Homes	
Number	73
Capacity	872
Registered Homes	
Number	66
Capacity	754
Source: Texas Department of Family and Protective Services.	

Unmet Needs for Services

According to data provided by the organizations that administer and provide child care services and programs for low-income children, Hidalgo County serves 3,690 children 3 to 5 through the Head Start program in Hidalgo County, Teaching & Mentoring Communities serves 519 children 3 to 5 through the Migrant and Seasonal Head Start program in Hidalgo County, and Workforce Solutions serves 3,234 children 3 to 5 through the Child Care Management System in Hidalgo County. Together, a total of 7,443 children 3 to 5 receive child care services through Hidalgo County Head Start, Teaching & Mentoring Communities' Migrant and Seasonal Head Start, and Workforce Solutions' Child Care Management Services programs in Hidalgo County.

To calculate the unmet need for the Head Start program in Hidalgo County, we use the 2016 ESRI estimate of 47,393 children 3 to 5 in Hidalgo County. We multiply this number by 47 percent (47% of children under 5 in Hidalgo County are living in poverty according the American Community Survey) to get 22,274 children 3 to 5 who are potentially income eligible for Head Start. Of the 22,274 children that are potentially income eligible, we subtract the 7,443 children 3 to 5 who are receiving child care services through Hidalgo County Head Start, Teaching & Mentoring Communities' Migrant and Seasonal Head Start, and Workforce Solutions' Child Care Management Services programs, to calculate an estimated unmet need of 14,831 children 3 to 5 that could qualify for Head Start in Hidalgo County.

Unmet Need in Hidalgo County	
Children 3 to 5 Population in Hidalgo County	47,393
Times Percentage of Children Living in Poverty (47%)	22,274
Less Children 3 to 5 Served by Hidalgo County Head Start, TMC and CCMS	7,443
Unmet Need Children 3 to 5 for Head Start in Hidalgo County	14,831
Source: UTRGV calculations using ESRI, Hidalgo County Head Start, TMC, CCMS, and ACS data.	

To calculate the unmet need for Head Start by city and rural areas of Hidalgo County, we multiplied the 14,831 children 3 to 5 by the population distribution of children 3 to 5 in Hidalgo County.

UNMET NEED CHILDREN 3 TO 5, HIDALGO COUNTY	% of 3-5 Population	Unmet Need 3-5 Population
Alamo	2.17%	322
Alton	1.70%	252
Donna	1.99%	295
Edcouch	0.42%	62
Edinburg	8.97%	1,330
Elsa	0.67%	99
Granjeno	0.05%	7
Hidalgo	1.36%	202
La Joya	0.51%	76
La Villa	0.19%	28
McAllen	14.03%	2,081
Mission	9.17%	1,360
Mercedes	1.84%	273
Palmhurst	0.30%	44
Palmview	0.72%	107
Penitas	0.65%	96
Pharr	9.43%	1,399
Progresso	0.87%	129
Progresso Lakes	0.03%	4
San Juan	4.33%	642
Sullivan City	0.47%	70
Weslaco	4.33%	642
Rural areas	35.81%	5,309
Hidalgo County	100.0%	14,831
Sources: ESRI 2016 estimates, American Community Survey 2013.		

Children with Disabilities

Early Childhood Intervention

ECI is a statewide program for families with children, birth to three, with disabilities and developmental delays. ECI supports families to help their children reach their potential through developmental services. Services are provided by a variety of local agencies and organizations across Texas. Easter Seals Rio Grande Valley and Region One Education Service Center provide ECI services in Hidalgo County.

Early Childhood Intervention	Birth-to-3 Population	Children Served: Comprehensive Services	Children Served: Follow Along	Total Served	Percent of Population Served: Comp	Percent of Population Served: Total
Hidalgo County	66,222	1,704	17	1,721	2.57%	2.60%
Statewide	1,637,681	51,332	1,530	52,862	3.13%	3.23%
Source: Texas Department of Assistive and Rehabilitative Services, ECI Consumer Profile, FY 2015.						

Children 3 to 5 with a Disability in Public School

According to the Texas Education Agency, there are 1,426 students between the ages of 3 to 5 with a disability in public schools in Hidalgo County.

Children 3 to 5 with a Disability in Public School	Hidalgo County
Orthopedic impairment	25
Other health impairment	104
Auditory impairment	31
Visual impairment	19
Deaf Blind	NA
Intellectual disability	89
Emotional disturbance	NA
Learning disability	NA
Speech impairment	883
Autism	181
Developmental delay	NA
Traumatic brain injury	NA
Non-categorical delay	94
Total	1,426
Source: Texas Education Agency. NA = not available as student counts less than five are not added in compliance with FERPA.	

Needs of Eligible Children and their Families

Unemployment was ranked the highest pressing concern by families in their communities, with 52.3% of the respondents listing it as the #1 concern. Crime was second with 47.8% of the families saying it was a pressing concern. Juvenile offenders (36.3%), lack of health insurance (35.4%), teenage pregnancy (25%) substance abuse (23.9%), child abuse (23.1%), undocumented immigrants (22.9%), lack of parental emphasis on education (20.0%), and divorce (14.3%) were the other pressing community concerns mentioned by families.

Community Concerns	%	2017	2013	2010	2007	2004	2001
Unemployment	52.3%	1	2	1	2	1	2
Crime	47.8%	2	1	2	1	2	1
Juvenile Offenders	36.3%	3	8	3	9	7	8
Lack of Health Insurance	35.4%	4	5	6	8	6	9
Teenage pregnancy	25.3%	5	4	5	4	3	4
Substance abuse (alcohol, drugs, etc.)	23.9%	6	6	7	7	5	6
Child Abuse	23.1%	7	9	10	11	9	12
Undocumented Immigrants	22.9%	8	10	9	6	10	7
Lack of parental emphasis on education	20.0%	9	3	4	3	4	3
Divorce	14.3%	10	11	11	13	12	15
Racial/Ethnic or sex discrimination	14.3%	11	17	16	17	18	17
Lack of utilities or public services	13.3%	12	14	14	14	13	14
Homelessness	12.3%	13	13	15	15	15	16
Lack of affordable housing	12.0%	14	7	8	5	8	5
Lack of funds for housing rehabilitation	11.0%	15	12	12	10	11	10
Elder abuse	8.7%	16	20	19	20	20	19
Illiteracy	8.6%	17	15	13	12	14	11
Spouse Abuse	6.9%	18	16	17	16	16	13
HIV/Aids	4.5%	19	21	21	18	17	18
Lack of handicap accessibility	4.3%	20	18	18	21	21	20
Lack of mental health services	3.6%	21	19	20	19	19	21

Awareness of Head Start

Over 83% of parents were aware of Head Start services in their community. The overwhelming majority of respondents learned about Head Start through family and friends (56%).

Aware of Head Start	2017	2013	2010	2007	2004	2001
Yes	83.8%	87.5%	82.9%	87.2%	85.5%	96.2%
No	16.2%	12.5%	17.1%	12.8%	14.5%	3.8%
	100.0%	100.0%	100.0%	100.0%	100.0%	100.0%

How Parents Found Out about Head Start	2017	2013	2010	2007	2004	2001
Friends	56.2%	55.6%	55.5%	41.9%	54.0%	65.7%
Staff	3.0%	23.1%	22.0%	21.3%	22.2%	24.6%
Media	14.3%	3.1%	1.8%	3.5%	1.5%	2.3%
Flyers	8.5%	13.7%	9.7%	15.1%	9.4%	4.9%
Other	37.3%	12.8%	11.0%	18.3%	12.9%	2.5%
	100.0%	100.0%	100.0%	100.0%	100.0%	100.0%

Awareness of Similar Childcare/Education Opportunities

Fifty-one percent of respondents said they were not aware of other similar programs that provide childcare/educational opportunities for their children.

Aware of other Childcare/Educational Opportunities	2017	2013	2010	2007	2004
Yes	48.1%	36.5%	35.6%	34.5%	31.8%
No	51.8%	63.5%	64.4%	65.5%	68.2%
	100.0%	100.0%	100.0%	100.0%	100.0%

Satisfaction with Health, Education, and Nutrition Program Resources

Ninety-two percent of the survey respondents were "very satisfied" or "satisfied" with the available resources for health, education, and nutrition programs in Hidalgo County.

Satisfaction with Health, Education, and Nutrition Program Resources	2017	2013	2010	2007	2004
Very satisfied	52.9%	48.0%	41.2%	38.3%	43.6%
Satisfied	39.6%	38.8%	44.5%	48.6%	42.1%
Neutral	7.0%	10.3%	11.3%	10.6%	10.2%
Dissatisfied	0.2%	0.9%	1.1%	1.7%	2.9%
Very dissatisfied	0.3%	1.9%	1.9%	.8%	1.2%
	100.0%	100.0%	100.0%	100.0%	100.0%

Childcare and Training Programs Would Like to See

Fifty-one percent of parents would like to see more childcare training in their community. Another 49% would like to see more programs that involve children. Fifty-eight percent of survey respondents were not aware of job training opportunities in their community. A very similar situation occurs when respondents answered if they were aware of "other" training opportunities; Fifty-two percent said they were not aware of other training for educational opportunities. These answers may point training providers to focus more efforts on promoting what job training and educational opportunities are available.

Training Parents Would Like to See	2017	2013	2010	2007	2004	2001
Childcare	51.4%	53.5%	43.9%	48.2%	75.5%	47.4%
Involvement with children	49.2%	47.8%	39.9%	43.2%	75.0%	43.4%
Prenatal	13.0%	16.0%	15.1%	20.4%	34.1%	11.0%
Mental health	14.9%	14.8%	12.2%	18.3%	30.4%	6.2%
Other	3.4%		13.8%	1.5%	--	--

Aware of Job Training Opportunities	2017	2013	2010	2007	2004	2001
Yes	41.5%	36.0%	38.0%	44.1%	44.3%	49.7%
No	58.4%	64.0%	62.0%	55.9%	55.7%	50.3%
	100.0%	100.0%	100.0%	100.0%	100.0%	100.0%

Aware of Educational Opportunities	2017	2013	2010	2007	2004	2001
Yes	47.2%	43.6%	43.0%	51.6%	50.7%	42.9%
No	52.7%	56.4%	57.0%	48.4%	49.3%	57.1%
	100.0%	100.0%	100.0%	100.0%	100.0%	100.0%

Family Services

According the internal data, Head Start parents expressed most interest and need for: asset building services (533), health education (373), English as a second language (335), adult education (320), and parenting education (298).

Family services needed (the difference in family services that parents expressed an interest or need in and received) are: adult education (295), English as a second language (272), health education (265), housing assistance (42), mental health services (37), job training (28), and child support assistance (4).

Family Services	Parents Expressed	Parents Received	Needed
Asset building services (such as financial education, opening savings and checking accounts, debt counseling, etc.)	533	533	0
Health education	373	108	265
English as a Second Language (ESL)	335	63	272
Adult education such as GED programs and college selection	320	25	295
Parenting education	298	298	0
Job training	57	29	28
Housing assistance such as subsidies, utilities, repairs, etc.	46	4	42
Mental health services	38	1	37
Assistance to families of incarcerated individuals	21	21	0
Emergency/crisis intervention such as meeting immediate needs for food, clothing, or shelter	18	18	0
Relationship/marriage education	9	9	0
Child support assistance	4	0	4
Substance abuse prevention	0	0	0
Substance abuse treatment	0	0	0
Child abuse and neglect services	0	0	0
Domestic violence services	0	0	0
Total	2,052	1,109	943
Source: Office of Head Start, Family Information Report, Hidalgo County Head Start, 2016.			

Community Resources for Eligible Children and Families

There is a good network of agencies and community organizations that administer or provide programs to help low-income families and children with food, housing, health care, education and jobs in the communities in the service area.

Texas Health and Human Services Commission (SNAP, TANF, Medicaid)
135 E. Business Highway 83, Alamo, TX 78516, (956) 787-0026
2520 S. Veterans Blvd., Edinburg, TX 78540, (956) 383-5344
2520 N. Closner, Edinburg, TX 78541, (956) 383-3120
¼ Mile S. of Highway 107 on FM 88, Elsa, TX 78543, (956) 262-4701
4501 W. Business Highway 83, McAllen, TX 78501, (956) 630-9441
202 W. 2nd St., Mercedes, TX, 78570, (956) 565-2445
4015 N. Conway, Mission, TX 78573, (956) 585-1579
1503 W. Polk, Pharr, TX 78577, (956) 787-3131
3412 E. Moreland, Weslaco, TX 78596, (956) 969-9115

Texas Department of Family & Protective Services (Child and Adult Abuse)
135 E. Business Highway 83, Alamo, TX 78516, (956) 781-5991
2520 N. Closner Blvd., Edinburg, TX 78541, (956) 316-2489
2520 S. Veterans Blvd., Edinburg, TX 78541, (956) 383-5344
300 E. Canton Rd., Edinburg, TX, 78539, (956) 381-5791
1919 Austin Ave., McAllen, TX 78501, (956) 682-1301
510 S. Texas Blvd., Weslaco, TX 78596, (956) 969-9280

Food Assistance
RGV Food Bank, 724 North Cage Blvd., Pharr, TX 78577, (956) 682-8101

General Assistance (Housing, Food, Utility Bills)
Salvation Army, 1600 N. 23rd. St., McAllen, TX 78501, (956) 682-1468
Catholic Charities RGV, 700 N. Virgen de San Juan Blvd., San Juan, TX 78589, (956) 702-4088

Social Security Administration (SSI)
3004 N. McColl Rd., McAllen, TX 78501, 1-855-886-9628

Attorney General (Child Support)
3508 N. Jackson Rd., Ste. 600, Pharr, TX 78577, 1-800-252-8014

Womens Infants and Childrens Program (WIC)
Edinburg WIC Clinic, 3105 E. Richardson, Edinburg, TX, 78539, (956) 380-0363
Mission WIC Clinic, 211 South Schuerbach Rd., Mission, TX, 78572, (956) 581-2723
Pharr WIC Clinic, 1903 North Knights, Pharr, TX 78577, (956) 783-1151
Hidalgo WIC Clinic, 702 East Tejano, Hidalgo, TX 78557, (956) 843-8151
Donna WIC Clinic, 301 South 8th Street, Donna, TX 78537, (956) 464-2251
Weslaco WIC Clinic, 1901 North Bridge, Weslaco, TX 78596, (956) 968-0594
Mercedes WIC Clinic, 540 S. Texas, Mercedes, TX 78570, (956) 565-2603
Elsa WIC Clinic, 708 East Edinburg Street, Elsa, TX 78543, (956) 262-1324
Progreso WIC Clinic, 510 N. FM 1015, Progreso, TX 78579, (956) 514-0236
Alton WIC Clinic, 3509 E. Main Ave., Suite 104, Alton, TX 78573, (956) 519-7159
Alamo WIC Clinic, 313 E. Business 83, Suite 113, Alamo, TX 78516, (956) 783-5369
Mission WIC Clinic II, 722 N. Breyfogle, Suite 2-C, Mission, TX 78572, (956) 584-3334
McAllen WIC Clinic II, 220 S. Bicentennial, Suite D, McAllen, TX 78501, (956) 972-0554
Edinburg WIC Clinic II, 113 Dawson, Edinburg, TX 78539, (956) 316-1434
Pharr WIC Clinic II, 300 W. Hall Acres Rd., Ste. A, Pharr, TX 78577 (956) 781-4920
San Carlos WIC Clinic, 230 North 86th Street, Edinburg, TX 78539, (956) 318-1476
Weslaco WIC Clinic II, 417 South Oregon Avenue, Weslaco, TX 78596, (956) 968-3516
North San Juan WIC Clinic, 509 E. Earling Road, San Juan, TX 78589, (956) 702-7788
McAllen WIC Clinic III, 3001 North 23rd Street, Suite 8, McAllen, TX 78502, (956) 683-1822
Alton WIC Clinic II, 3503 W. 5 Mile Rd., Ste 5, 6, 7, Mission, TX 78574, (956) 583-5791
Alamo WIC Clinic II, 1429 S. Tower Rd., Alamo, TX 78516, (956) 784-3523

Early Childhood Intervention (ECI)
Easter Seals Rio Grande Valley, Inc., 1217 Houston St., McAllen TX 78501, (956) 631-9171
Region One Education Service Center, 1900 W. Schunior, Edinburg, TX 78540, (956) 651-1960

Summer Food Service Program Sites
USDA, Summer Food Service Program, click on link to find a site, over 100 sites.

Public Housing (Low-Rent and Section 8)
Alamo Housing Authority, 309 N. 9th St., Alamo, TX 78516, (956) 787-2352
Edcouch Housing Authority, 209 Pacific Ave., Edcouch, TX 78538, (956) 262-2471
Edinburg Housing Authority, 910 S. Sugar Rd., Edinburg, TX 78539, (956) 383-3839
Hidalgo Housing Authority, 704 E. Texano Dr., Hidalgo, TX 78557, (956) 843-8561
La Joya Housing Authority, 945 S. Leo Ave., La Joya, TX 78560, (956) 581-7069
McAllen Housing Authority, 2301 Jasmine Ave., McAllen, TX 78501, (956) 686-3951
Mercedes Housing Authority, 306 W. 5th St., Mercedes, TX 78570, (956) 565-3139
Mission Housing Authority, 1300 E. 8th St., Mission, TX 78572, (956) 585-9747
Pharr Housing Authority, 104 W. Polk, Pharr, TX 78577, (956) 787-1822
San Juan Housing Authority, 700 Maldonado, San Juan, TX, (956) 781-3130
Hidalgo County Housing Authority, 1800 N. Texas Blvd., Weslaco, TX 78596, (956) 969-5865
Weslaco Housing Authority, 600 N. Airport Dr., Weslaco, TX 78596, (956) 969-1538

School Districts (Independent and Charter)
Donna ISD, 116 N. 10th St., Donna, TX 78537, (956) 464-1600
Edcouch-Elsa ISD, P.O. Box 127, Edcouch, TX 78538, (956) 262-6000
Edinburg CISD, 411 N. 8th Ave., Edinburg, TX 78541, 9956) 289-2300
Hidalgo ISD, 324 E. Flora St., Hidalgo, TX, 9956) 843-4401
La Joya ISD, 200 W. Expressway 83, La Joya, TX 78560, (956) 323-2000
La Villa ISD, P.O. Box 9, La Villa, TX 78562, 9956) 262-4755
Mercedes ISD, 206 W. 6th St., Mercedes, TX 78570, (956) 514-2000
Mission CISD, 1201 Bryce Dr., Mission, TX 78572, (956) 323-5500
Monte Alto ISD, 1st St., Monte Alto, TX 78538, (956) 262-1381
PSJA ISD, 601 E. Kelly, Pharr, TX 78577, (956) 354-2000
Progreso ISD, P.O. Box 610, Progreso, TX 78579, (956) 565-3002
Sharyland ISD, 1106 N. Shary Rd., Mission, TX 78572, (956) 580-5200
Valley-View ISD, 9701 S. Jackson Rd., Pharr, TX 78577, (956) 340-1000
Weslaco ISD, 319 W. 4th St., Weslaco, TX 78596, (956) 969-6500
McAllen ISD, 2000 N. 23rd St., McAllen, TX 78501, (956) 618-6000
Excellence in Leadership Academy, 915 W. Expressway 83, Mission, TX, (956) 424-9504
Horizon Montessori Public Schools, 519 S. Texas Blvd., Weslaco, TX, (956) 969-3092
Idea Public Schools, 505 Angelita Dr., Ste. 9, Weslaco, TX 78599, (956) 377-8000
Vanguard Academy, 1200 E. Kelly, Pharr, TX 78577, (956) 781-1701

Mental Health and Substance Abuse
Tropical Texas Behavioral Health, 1901 S. 24th Ave., Edinburg, Texas, (956) 289-7000
Tropical Texas Behavioral Health, 601 W. 6th St., Weslaco, Texas, (956) 968-8551
Palmer Drug Abuse Program, 115 N. 9th, McAllen, TX 78501, (956) 687-7714
Behavioral Health Solutions, 5510 N. Cage, Pharr, TX 78577, 1-800-748-3580, (956) 878-7110

Workforce Solutions (Work, Child Care, Unemployment)
WF Solutions, 2719 W. University Dr., Edinburg, TX 78539, (956) 380-0008
WF Solutions, 901 Travis St., Ste. 7, Mission, TX 78572, (956) 519-4300
WF Solutions, 1600 N. Westgate, Ste. 400, Weslaco, TX 78596, (956) 969-6100

Texas Rural Legal Aid (Legal Assistance)
316 S. Closner Blvd., Edinburg, TX 78539, (956) 393-6200
300 S. Texas, Weslaco, TX 78596, (956) 447-4800

Homelessness and Temporary Shelter
Salvation Army, 1600 N. 23rd. St., McAllen, TX 78501, (956) 682-1468
Catholic Charities RGV, 700 N. Virgen de San Juan Blvd., San Juan, TX 78589, (956) 702-4088

Immunizations
1304 S. 25th Ave., Edinburg, TX 78539
3105 E. Richardson, Edinburg, TX 78539, (956) 318-2040
708 E. Edinburg, St., Elsa, TX 78543, (956) 262-1141
300 E. Hackberry, McAllen, TX 78501
211 N. Shuerbach, Ste. 1, Mission, TX 78572

Adult Education and Literacy (ABE, GED, ESL, Literacy)
McAllen Adult Learning Center, 4305 N. McColl, McAllen, TX 78504, (956) 984-6274
Pharr Adult Learning Center, 317 W. Gore St., Pharr, TX 78577, (956) 984-6277
Region One, 1900 W. Schunior, Edinburg, TX, (956) 984-6270
La Union del Pueblo Entero, 209 W. Dawes Ave., Alton, TX, (956) 584-3636
La Union del Pueblo Entero, 1225 N. Baseline Rd., Mercedes, TX, (956) 565-2761
La Union del Pueblo Entero, Cesar Chavez Rd. and Bus. 83, San Juan, TX 78589, (956) 787-2233
Texas A&M HEP Program, 3516 E. Expressway 83, Weslaco, TX, (956) 447-9355
UTRGV HEP Program, 1201 W. University Dr., Edinburg, TX 78539, (956) 665-2521
South Texas College, 3201 Pecan Blvd., McAllen, TX 78501, (956) 872-3585

Domestic Violence
Mujeres Unidas, 1-800-580-4879, (956) 630-4878
Family Crisis Center of the Rio Grande Valley, 9956) 423-9305

Indigent Health Care
Edinburg Health Clinic, 3105 E. Richardson R., Edinburg, TX 78539, (956) 318-2087
Edinburg Regional Medical Center, 1102 W. Trenton Rd., Edinburg, TX 78541, (956) 388-6704
McAllen Health Clinic, 300 E. Hackberry, McAllen, TX 78501, (9556) 682-0824
McAllen Medical Center, 301 W. Expressway 83, McAllen, TX 78503, (956) 971-5645
Mission Health Clinic, 211 N. Schuerbach Rd., Mission, TX 78572, (956) 581-8596
Mission Hospital, 906 S. Bryan Rd., Ste. 103, Mission, TX 78572, (956) 323-1980
Weslaco Health Clinic, 1901 N. Bridge, Weslaco, TX 78596, (956) 969-4700
Knapp Medical Center, 1401 E. 8th St., Weslaco, TX 78596, (956) 969-5587
Pharr Health Clinic, 300 W. Hall Acres, Pharr, TX 78577, (956) 787-3980
Rio Grande Regional Hospital, 222 E. Ridge, Ste., #118, McAllen, TX 78503, (956) 632-6586
Doctors Hospital at Renaissance, 5519 S. McColl, Edinburg, TX 78539, (956) 362-5566

Community Strengths

Community strengths were identified through the review of secondary research of existing publications and studies such as the *Lower Rio Grande Valley Development Council's Regional Strategic Plan, 2011-2016* and the *Hidalgo County Community Service Agency's Community Needs Assessment 2015*. The identified strengths of communities in Hidalgo County were:

- Young population
- Abundant workforce
- Growing economy, businesses, and job creation
- Hispanic culture and heritage
- New university (UTRGV) and medical school
- Hospitals and health care services
- Low cost of living
- Entrepreneurial spirit
- International trade and infrastructure
- Natural resources
- Recreation
- Tourism
- Retail destination
- Cultural diversity
- Climate
- Quality schools
- Community involvement of faith-based organizations
- Availability of social support network and agencies
- Availability of land for development
- Responsive community leaders

2017 Head Start Parent Survey

Dear parent/guardian: We are doing a community assessment of our Head Start program. Please fill out the survey. Your answers will help us improve our program. If you need help, ask your caseworker at your center. Your answers will not be shared with anyone. Thank you very much.

Please mark clearly. ☑

1. Are you a Head Start parent? ☐ Yes ☐ No
1A. If not a parent, what are you? ☐ Grandparent ☐ Foster Parent ☐ Legal Guardian ☐ Other
2. What is your sex? ☐ Male ☐ Female
3. What is your race/ethnicity? ☐ Hispanic ☐ White ☐ Black ☐ American Indian ☐ Asian ☐ Other
4. What is your marital status? ☐ Single ☐ Married ☐ Separated ☐ Divorced ☐ Widowed
5. What is your residency status? ☐ U.S. Citizen ☐ Resident ☐ Other
6. Do you speak... ☐ English ☐ Spanish ☐ Other(s) *(please check all that apply)*
7. Which language is spoken the most in your home? ☐ English ☐ Spanish ☐ Other
8. What is the highest level of education you (and/or your spouse) have completed?

You	Your Spouse	
☐	☐	Less than 9th grade
☐	☐	More than 9th grade, but no diploma
☐	☐	High School Diploma or GED
☐	☐	Some College
☐	☐	Associate Degree
☐	☐	College Degree or higher

9A. Are you employed... ☐ Full-time ☐ Part-time ☐ Seasonally ☐ Not Employed
9B. Is your spouse employed... ☐ Full-time ☐ Part-time ☐ Seasonally ☐ Not Employed
10. What is your family's annual income from all sources?

☐ Less than $11,880
☐ Between $11,881 and $16,020
☐ Between $16,021 and $20,160
☐ Between $20,161 and $24,300
☐ Between $24,301 and$28,440
☐ Between $28,441 and $32,580
☐ Between $32,581 and $36,730
☐ Between $36,731 and $40,890
☐ More than $40,890

11. Counting yourself, how many persons live in your household? _____
12. Do you have children below the age of 5? ☐ Yes ☐ No 12 A. If yes, how many? _____
12B. Do any of your children below the age of 5 suffer from any physical or mental disability? ☐ Yes ☐ No
If yes, how many of them have some form of disability? _____
13. Which of the following social services do you or members of your family have, receive, or participate in?

☐ Health insurance
☐ Family health insurance coverage
☐ Food stamps (SNAP=Supplemental Nutrition Assistance Program)
☐ WIC benefits (WIC=Women Infant Children)
☐ TANF (TANF=Temporary Assistance for Needy Families)
☐ Medicaid
☐ Social Security
☐ CHIP (CHIP=Children Health Insurance Program)
☐ Public housing benefits

Check all that apply

14. Which of the following amenities do you have?

☐ Own home (not rent)
☐ Heating in your home
☐ Air conditioning
☐ Complete kitchen facilities
☐ Complete plumbing facilities
☐ Telephone service (cell phone or landline)
☐ A computer at home
☐ Access to the Internet
☐ Own transportation (car, truck)

Check all that apply

(Over, please)

15A. If you own a car or truck, how many do you own? _____

15B. If you do not, what is your primary means of transportation? ☐ Taxi ☐ Bus ☐ Ride from friends & family ☐ Borrow car

16. Is flooding a problem in your neighborhood? ☐ Yes ☐ No

17. In your opinion, which are the top **five** pressing concerns in your community?

☐ Crime	☐ Lack of parental emphasis on education
☐ Lack of health insurance	☐ Illiteracy
☐ Unemployment	☐ Lack of affordable housing
☐ Undocumented immigrants	☐ Lack of funds for housing rehabilitation
☐ Child abuse	☐ Homelessness
☐ Spouse abuse	☐ Lack of utilities or public services
☐ Elder abuse	☐ Lack of accessibility to mental health services
☐ Divorce	☐ Substance abuse (alcohol, drugs, etc.)
☐ HIV/AIDS	☐ Racial/Ethnic or sex discrimination
☐ Teenage pregnancy	☐ Lack of handicap accessibility
☐ Juvenile offenders	☐ Other, please specify _____

18. Are you aware of job training opportunities in your community? ☐ Yes ☐ No

19. Are you aware of other training or educational opportunities in your community? ☐ Yes ☐ No

20. Are you aware of Head Start services in your community? ☐ Yes ☐ No

20A. If yes, how did you find out about them? ☐ Friends ☐ Family ☐ Staff ☐ Media ☐ Flyers ☐ Other

21. If your child attends Head Start, how satisfied are you with the program?

☐ Very satisfied ☐ Satisfied ☐ Neutral (no inclination) ☐ Dissatisfied ☐ Very dissatisfied

21A. If dissatisfied or very dissatisfied, why?

_____

_____

22. Are you aware of other similar education or child care opportunities for your children in Hidalgo County? ☐ Yes ☐ No

23. Regarding education, health, nutrition, and social services, how satisfied are you with the resources available in Hidalgo County?

☐ Very satisfied ☐ Satisfied ☐ Neutral (no inclination) ☐ Dissatisfied ☐ Very dissatisfied

23A. If dissatisfied or very dissatisfied, what resources would you like to see more of?

---

24. What kind of training programs would you like to see in your community?

☐ Prenatal health ☐ Child care ☐ Mental health ☐ Involvement with children ☐ Other _____

25. What is the zip code of where you live?_____

26. Please provide us with additional comments or suggestions you wish to share with us.

_____

_____

THANK YOU FOR YOUR COOPERATION

2017 Encuesta Comunitaria Del Programa Hed Start Del Condado De Hidalgo

Queridos Padres: Estamos haciendo una evaluación comunitaria de nuestro programa Head Start. Por favor llene la encuesta. Sus respuestas nos ayudarán a mejorar nuestro programa. Si necesita ayuda, consulte a su trabajador social en su centro. Sus respuestas no serán compartidas con nadie. Gracias por su ayuda.

Por favor marque claramente. ☑

1. ¿Es Ud. un padre de familia de Head Start? ☐ Sí ☐ No

1A. ¿Si no es padre de familia, ¿qué es? ☐ Abuelo(a) ☐ Padre adoptivo ☐ Guardián legal ☐ Otro

2. ¿Cuál es su sexo? ☐ Masculino ☐ Femenino

3. ¿Cuál es su raza? ☐ Hispano ☐ Blanco ☐ Negro ☐ Indio Americano ☐ Asiático ☐ Otro

4 ¿Cuál es su estado civil? ☐ Soltero ☐ Casado ☐ Separado ☐ Divorciado ☐ Viudo

5 ¿Cuál es su estado de residencia? ☐ Ciudadano de U.S. ☐ Residente ☐ Otro

6 Usted habla... ☐ Ingles ☐ Español ☐ Otro(s) *(marque todos los que apliquen)*

7 ¿Cuál idioma predomina en su hogar? ☐ Ingles ☐ Español ☐ Otro

8 ¿Cuál es el nivel mas alto de educación que usted y su esposo(a) tienen?

Usted	Su pareja	
☐	☐	Menos del Noveno grado
☐	☐	Mas del Noveno grado, pero no diploma
☐	☐	Un diploma o GED
☐	☐	Algunos años de colegio o escuela superior
☐	☐	Grado Asociado
☐	☐	Título universitario o superior

9. ¿Trabaja usted? ☐ Tiempo completo ☐ Medio tiempo ☐ Como jornalero o migrante ☐ Desempleado

¿Su esposo(a) trabaja? ☐ Tiempo completo ☐ Medio tiempo ☐ Como jornalero o migrante ☐ Desempleado

10. ¿Cuáles son los ingresos totales de su hogar, tomando en cuenta todas las fuentes de ingreso?

☐ Menos de $11,880	☐ Entre $11,881 y $16,020	☐ Entre $16,021 y $20,160
☐ Entre $20,161 y $24,300	☐ Entre $24,301 y $28,440	☐ Entre $28,441 y $32,580
☐ Entre $32,581 y $36,730	☐ Entre $36,731 y $40,890	☐ Más de $40,890

11. ¿Contándose ud. mismo, cuántas personas viven en su casa? _____

12. ¿Tiene hijos menores de 5 años? ☐ Sí ☐ No 12A. Si es Sí, ¿cuántos hijos menores de 5 años tiene? _____

12B. ¿Algunos de sus hijos menores de 5 años sufren de alguna discapacidad mental o física? ☐ Sí ☐ No

Si su respuesta es Sí, ¿cuántos de ellos tienen alguna discapacidad? _____

13. ¿Cuáles de los siguientes servicios sociales recibe usted y/o algún miembro de su familia?

- ☐ Seguro medico
- ☐ Seguro medico con cobertura familiar
- ☐ Estampillas de comido (SNAP)
- ☐ Beneficios WIC (WIC=Mujeres con Niños Infantes)
- ☐ TANF (TANF = Asistencia Temporal para Familias Necesitadas)
- ☐ Medicaid
- ☐ Seguro social
- ☐ CHIP (CHIP=Programa de Seguro Medico para Niños)
- ☐ Vivienda publica (Public Housing)

14. ¿Cuales de los siguientes servicios tiene ud.?

- ☐ Casa propia (no renta)
- ☐ Calefaccion en su casa
- ☐ Aire acondicionado en su casa
- ☐ Instalaciones completas en la cocina
- ☐ Instalaciones completas de plomeria
- ☐ Servicio de teléfono (celular o de su casa)
- ☐ Una computadora en casa
- ☐ Acceso a Internet
- ☐ Transporte propio (automovil, camion)

(Continua)

15A. ¿Cuantos vehiculos tiene? _____

15B. ¿Si no tiene vehículos, ¿Cuál es su medio de transporte? ☐ Taxi ☐ Camión ☐ Amigos y familiares ☐ Vehiculo prestado

16. ¿Es la inundacion un problema en su vecindario? ☐ Sí ☐ No

17. ¿Cuáles son **las cinco** principales preocupaciones de su comunidad en su opinión?

☐ Crimen	☐ Falta de enfasis de los padres en la educacion
☐ Falta de seguro medico	☐ Analfabetismo
☐ Desempleo	☐ Falta de vivienda asequible
☐ Personas indocumentadas	☐ Falta de fondos para la rehabilitacion de viviendas
☐ Abuso a los menores	☐ Sin hogar
☐ Abuso del conyuge	☐ Falta de utilidades o servicios publicos
☐ Maltrato a personas mayores	☐ Falta de accesibilidad de servicios de salud mental
☐ Divorcio	☐ Abuso de substancias (alcohol, drogas, etc.)
☐ VIH/SIDA	☐ Discriminacion racial/etnica o sexual
☐ Embarazo en la adolescencia	☐ Falta de accesibilidad para descapacitados
☐ Delicuentes juveniles	☐ Otro, por favor especificar_____

18. ¿Tiene conocimiento de las oportunidades de capacitacion laboral en su comunidad? ☐ Sí ☐ No

19. ¿Tiene conocimiento de otras oportunidades de capacitacion o educacion en su comunidad? ☐ Sí ☐ No

20. ¿Tiene conocimiento de los servicios de Head Start en su comunidad? ☐ Sí ☐ No

20A. Si es Sí, ¿como supo del programa? ☐ Amigos ☐ Familia ☐ Personal ☐ Radio, TV ☐ Folletos ☐ Otro

21. Si su hijo asiste a Head Start, cuan satisfecho esta con el programa?

☐ Muy satisfecho ☐ Satisfecho ☐ Neutral ☐ Insatisfecho ☐ Muy insatisfecho

Q21A. Si está insatisfecho o muy insatisfecho, ¿por qué?_____

_____

22. ¿Tiene conocimiento de otras oportunidades educación o cuidado de niños similares para sus hijos en el Condado de Hidalgo?
☐ Sí ☐ No

23. ¿En cuanto a salud, educacion, nutricion y servicios sociales, que tan satisfecho esta con los recursos disponibles en el Condado de Hidalgo? ☐ Muy satisfecho ☐ Satisfecho ☐ Neutral ☐ Insatisfecho ☐ Muy insatisfecho

23A. Si está insatisfecho o muy insatisfecho, ¿qué recursos le gustaría ver más?_____

_____

24. ¿Que clase de programas de capacitacion le gustaria ver en su comunidad?

☐ Salud prenatal ☐ Cuidado de los niños ☐ Salud mental ☐ Participacion con niños ☐ Otro _____

25. ¿Cual es el codigo postal de su residencia?_____

26. Por favor, proveanos con comentarios o sugerencias adicionales que desee compartir con nosotros.

_____

_____

MUCHAS GRACIAS POR SU COOPERACION

AI-59892 **Head Start** **16. E.**

CC - REGULAR

Meeting Date: 05/30/2017

Submitted For: Edmundo Garcia, HEAD START **Submitted By:** Linda Galaviz, HEAD START

Department: HEAD START

Information

CAPTION

Discussion/Approval to Enter into a Memorandum of Understanding (MOU) between Hidalgo Independent School District and Hidalgo County Head Start Program

BACKGROUND

Policy Council Approval: 05.17.17

Fiscal Impact

Attachments

MOU w Hidalgo ISD
legal signed

Form Review

Inbox	Reviewed By	Date
Budget & Management	Veronica Ortiz	05/19/2017 10:21 AM
Final Approval	Monica Salinas	05/26/2017 02:58 PM
Form Started By: Linda Galaviz		Started On: 05/16/2017 09:41 AM
Final Approval Date: 05/26/2017		

Hidalgo County Head Start Program

Policy Council Regular Meeting

DATE: May 17, 2017

SUBJECT: Discussion/Approval to Enter into a Memorandum of Understanding (MOU) between Hidalgo Independent School District (Hidalgo ISD) and Hidalgo County Head Start Program

RATIONALE/NEED: The purpose of the Memorandum of Understanding (MOU) is to establish a working arrangement with the Hidalgo Independent School District to fulfill the partnership commitment as stipulated in the Texas Literacy Initiative (TLI) Grant provided by the Texas Education Agency (TEA).

RECOMMENDATION: Administration recommends approval.

COST:

RELATED INFORMATION INCLUDES: Memorandum of Understanding

****

INITATED BY: Teresa Flores, Executive Director

REVIEWED BY: Teresa Flores, Executive Director

EXECUTIVE DIRECTOR'S APPROVAL: Teresa Flores

Memorandum of Understanding between
Hidalgo Independent School District and the
Hidalgo County Head Start Program
2017-2018

Purpose:

This collaborative partnership, the **School Readiness Partnership Model (SRPM)**, establishes an agreement between **Hidalgo County Head Start Program (HCHSP) and the Hidalgo Independent School District (Hidalgo ISD)** to provide Head Start services to age and income eligible pre-K children as per the guidelines established by the Department of Health and Human Services (DHHS) and Texas Education Agency (TEA). The intentions are to collaboratively develop and foster a cohesive partnership to provide a high quality early childhood program for children and their families; to ensure that each Agency assumes the responsibility to communicate with the other and share leadership responsibilities to maximize resources; and to ensure that these collaboration arrangements between **Hidalgo ISD** and **HCHSP** are developed, implemented, and reviewed annually to improve quality of services.

HCHSP is a governmental entity under the auspices of Hidalgo County. **Hidalgo ISD** is a public education institution of the state of Texas. **HCHSP** and **Hidalgo ISD** each have Boards of Directors (Hidalgo County Head Start Policy Council, Hidalgo County Commissioners' Court and Hidalgo ISD Board of Trustees) established per applicable statues and local ordinances and/or procedures, which operate within the scope of their defined duties. Each Board has received information regarding the nature and scope of the proposed partnership and have, approved the partnership and granted signatory authority to the individual designated as authorized to bind their respective organizations. Signatory authorities are listed on the end of this agreement. Each designee shall ensure that their respective Board of Directors is informed of the various aspects and elements of this partnership agreement signature page.

The terms and conditions set forth in the following document shall constitute the entire agreement between **Hidalgo ISD** and **HCHSP** and may not be amended except by a written document signed by both entities.

Days and Hours of Operation:
Days of operation shall not be less than one-hundred seventy-seven (176) days, during the months of August through May. The daily operations will be from 7:45 am to 5:15 pm.
(Note: District Calendar will be developed and approved by both entities.)

Center Sites:
The names and addresses of the **HCHCP** sites that will be serviced by **Hidalgo ISD**:
Hidalgo Head Start Center
607 South 5th Street
Hidalgo, Texas 78557

Term:

The Term of this Memorandum of Understanding is for one (1) year commencing August 1, 2017 and ending July 31, 2018. Hidalgo County Head Start shall have the option of renewal to extend the term of

the MOU hereof, commencing on the first day of August of each year for the term of the Head Start grant or other terms as may be subsequently agreed to upon by both parties.

Hidalgo ISD Responsibilities:

Hidalgo ISD will provide appropriate educational and supportive services to ensure children and families are school ready. **Hidalgo ISD** shall comply with and provide in a satisfactory manner as outlined in the Head Start Performance Standards, the Head Start Act of 2007, guidance from the Office of Heat Start (OHS), OMB circulars and as applicable either the Texas Education Agency (TEA), United States Department of Agriculture (USDA), or the Texas Department of Family and Protective Services (TDFPS) Childcare Licensing Regulations.

Program Description:

Eligible children are 3 or 4 year olds as of September 1, 2017, will be dual-enrolled and served by **Hidalgo ISD** and **HCHSP**. Collaboratively, the **HCHSP** children will receive 3 hours of instruction in cognitive development by a certified **Hidalgo ISD** funded **School Readiness Partnership Model (SRPM) teacher** in each classroom, and full day services by a Head Start teacher and an assistant teacher with credentials required by **HCHSP** in a designated facility meeting Head Start, Child Care Licensing and school district requirements.

Partnership Responsibilities:

A. **Hidalgo ISD** will:
   a. Assign a **Hidalgo ISD** principal, instructional coach/s, and/or other district liaison to the Hidalgo Head Start facilities to provide supervision, oversight, support and evaluation of the **Hidalgo ISD** teachers.
   b. Provide certified early childhood teachers to deliver 3 hours of instruction in cognitive, physical, and social development to participating **HCHSP** children in each classroom.
   c. Coordinate efforts with **HCHSP** to identify at least 10% of funded enrollment of Head Start children with special needs and follow the referral process for identification and provision of services.
   d. Permit HCHSP representatives to attend ARDs conducted by **Hidalgo ISD** involving **HCHSP** children.
   e. Supplement health services, educational services, parental training and other services as required by the children and their families.
   f. Assign special education teachers to provide services to children who are identified in need of special services through the **Hidalgo ISD** Special Education Program.
   g. Arrange for a substitute when the **Hidalgo ISD** teacher is absent.
   h. Provide supplemental instructional resources essential to implement a high quality comprehensive early childhood education program.
   i. Meet monthly or on a regular basis with **HCHSP** designated personnel to facilitate the instructional process and other services.
   j. Provide an overview of the collaboration with the participating Administrators.
   k. Finance the **Hidalgo ISD** personnel and other resources as appropriate.
   l. Purchase and maintain a certificate of insurance for commercial general liability, i) Bodily Injury and Property Damage $300,000 ea. Occurrence, and ii) General Aggregate $600,000 **HCHSP** must be named as an additional insured.

B. The **Hidalgo ISD** Teacher/Staff will:

a. Provide 3 hours of daily instruction in cognitive development, physical, or social to the **HCHSP** children utilizing a research based State Adopted Curriculum the Texas Prekinder Guidelines (up dated 2015).
b. Attend and/or assist in delivery of collaborative Professional Development for ISD and **HCHSP** as deemed appropriate.
c. Participate with the **HCHSP** staff in the recruitment of children process.
d. Implement a curriculum which is research based designed to support the child's social, emotional, cognitive, and physical development.
e. Attend **HCHSP** collaboration meetings as deemed necessary during the school year.
f. Complete and fulfill the required documentation for **Hidalgo ISD** and **HCHSP** staffs with the assistance of both Human Resource Departments.
g. Collaborate and plan with the **HCHSP** teacher to provide high quality early childhood instruction and prevent a duplication of efforts.
h. Inform the Center Manager and **HCHSP** teacher when she/he is going to be absent and utilize the Substitute System to obtain a designated substitute.
i. Follow collaboration protocol with any issues/concerns which may arise.
j. Follow **Hidalgo ISD** requirements, policies and procedures as well as the Head Start Performance Standards and the Texas Child Care Licensing Minimum Standards.
k. Comply with any other responsibilities assigned by the immediate supervisor.
l. Coordinate efforts with the **HCHSP** staff to enroll the children in the district.

C. **HCHSP** will:

a. Provide classroom space in a state child care licensed facility which meets Head Start and school districts requirements, is appropriately staffed and furnished to deliver Head Start services based on the Head Start Standards, the Head Start Act, Child Care Licensing and district/state requirements.
b. Coordinate efforts with **Hidalgo ISD** to identify children with special needs and follow the **Hidalgo ISD** referral process for identification and services.
c. Identify personnel who will attend the ARDs conducted by **Hidalgo ISD**.
d. Assist with the distribution, completion, and submission of the required **Hidalgo ISD** student enrollment documents within the first week of a child's enrollment.
e. Coordinate with district staff to transition children to the Hidalgo ISD public schools at the end of each school year.
f. Provide assistance with daily attendance reporting.
g. Meet monthly or as needed with the designated **Hidalgo ISD** personnel.
h. Schedule a time for the **HCHSP** teacher and **Hidalgo ISD** teacher plan weekly to implement a high quality early childhood instruction and prevent a duplication of effort.
i. Ensure that the classroom size meets the adult/child ratio as required by state and federal standards.
j. Finance program operations based on the **HCHSP** grant.

D. Collaboratively **Hidalgo ISD** and **HCHSP** will:

a. Implement an early childhood program utilizing best early childhood practices.
b. Coordinate and collaborate to plan for instruction, share resources and intensify services to meet the needs of eligible four year old (Pre-K children) and three year old children.
c. Schedule a weekly planning time for lesson planning and preparation.

d. Share information on upcoming workshops and conferences on Early Childhood and Head Start.
e. Review program operations to avoid duplication of efforts.
f. Meet on a regular basis to discuss the progress of the collaboration.
g. Perform children's assessment and evaluation, and collaborative program evaluation, to meet **Hidalgo ISD** and **HCHSP** requirements.
h. Analyze and share data for program planning and improvement.
i. Work together to meet attendance goal.
j. Inform all stakeholders of the collaboration and Memorandum of Understanding (MOU).
k. Provide family services, parent engagement activities and home visits.
l. Support all events which promote the partnership.
m. Organize and plan to sustain the partnership and promote a collaborative culture.

Transportation Services:

Assigned **Hidalgo ISD School Readiness Partnership Model** teachers will travel to **HCHSP** sites and provide instruction to students at such locations.

General Conditions:

- This Agreement shall not serve to create a principal agent relationship, partnership or joint venture between the parties hereto, nor does it authorize either party to serve as the legal representative or agent of the other. Neither party shall have any right or authority to assume, create, or incur any liability or any obligation of any kind, expressed or implied or in the name of or on behalf of the other party, except as agreed in this MOU.
- It is expressly understood and agreed that, in the execution of the agreement, **Hidalgo ISD** and any other governmental entities named herein do not waive, nor shall be deemed hereby to waive, any immunity or defense that would otherwise be available to it against claims arising in the exercise of governmental powers and functions.
- Each party, at their own expense, shall provide and maintain, during the term of this agreement, insurance, with our without retention, or self-insurance program, which shall provide general liability coverage for liability, property damage, and bodily injury.
- This Agreement is made in Hidalgo County, Texas and shall constitute the complete understanding of **Hidalgo ISD** and **HCHSP,** and may not be modified in any manner without the express written consent of all parties.
    - Notwithstanding those rules and regulations or standards set by both laws and regulatory agencies, the parties agree that if a dispute arises related to this MOU, the parties will not be required to submit the dispute to arbitration, but to non-binding mediation in Hidalgo County, Texas.
    - This Memorandum of understanding is performable in Hidalgo County, Texas.
- Either party may terminate this Agreement, with or without cause by providing 30 days written notice to the other party.
- Each party shall, to the extent allowed by law, hold harmless and indemnify the other party on claims or losses sustained by individuals directly or indirectly involved with performance of services in connection with this Agreement.

Indemnification:

To the extent allowed by law, **HCHSP** will and does hereby agree to indemnify, protect, defend with counsel approved by Grantee Board, and hold harmless **Hidalgo ISD** and their respective elected officials, employees, representatives and agents (collectively "**Hidalgo ISD Indemnitees**") from and against all damages, losses, liens, causes of action, suits, judgments, expenses, and other claims of any nature, kind, or description, including reasonable attorneys' fees incurred in investigating, defending or settling any of the foregoing (collectively "**Hidalgo ISD Claims**") by any person or entity, arising out of, caused by, or resulting from **HCHS's** performance under or breach of this Agreement and that are caused in whole or in part by any negligent act, negligent omission or willful misconduct of **HCHSP**, anyone directly employed by **HCHSP** or anyone for whose acts **HCHSP** may be liable. The provisions of this section will not be construed to eliminate or reduce any other indemnification or right which any **Hidalgo ISD** Indemnitee has by law or equity. All parties will be entitled to be represented by counsel at their own expense.

To the extent allowed by law, **Hidalgo ISD** will and does hereby agree to indemnify, protect, defend with counsel approved by **HCHSP** and **Hidalgo County**, and hold harmless **HCHSP** and **Hidalgo County**, and their respective elected officials, officers, directors, attorneys, employees, representatives and agents (collectively "**HCHSP Indemnitees**") from and against all damages, losses, liens, causes of action, suits, judgments, expenses, and other claims of any nature, kind, or description, including reasonable attorneys' fees incurred in investigating, defending or settling any of the foregoing (collectively "**HCHSP Claims**") by any person or entity, arising out of, caused by, or resulting from **HIDALGO ISD's** performance under or breach of this Agreement and that are caused in whole or in part by any negligent act, negligent omission or willful misconduct of **HIDALGO ISD** employees, anyone directly employed by the **HIDALGO ISD** or anyone for whose acts the **HIDALGO ISD** may be liable. The provisions of this Section will not be construed to eliminate or reduce any other indemnification or right which any **HCHSP** Indemnitee has by law or equity. All parties will be entitled to be represented by counsel at their own expense.

The below signed authorities agree to the statements in this document in order to develop a strong collaboration and an open communication system at all levels which will enable both **HIDALGO ISD** and **HCHSP** to provide the children the best services available.

Hidalgo Independent School District

_____ _____

Superintendent of Schools Date

Hidalgo County Head Start Program

_____ _____

Honorable Ramon Garcia
Hidalgo County Judge

Teresa Flores, Executive Director
Hidalgo County Head Start Program

_____ _____

Date Date

ATTEST:

_____

Arturo Guajardo, Jr.

Hidalgo County Clerk

Approved As To Form:
Atlas, Hall & Rodriguez, LLP

By:_____
Stephen L. Crain

Approved As To Form:
Oxford & González, P.C.

By:_____
Ricardo González

Date Approved by Policy Council:
Date Approved by Commissioner's Court:

Memorandum of Understanding between
Hidalgo Independent School District and the
Hidalgo County Head Start Program
2017-2018

Purpose:

This collaborative partnership, the **School Readiness Partnership Model (SRPM)**, establishes an agreement between **Hidalgo County Head Start Program (HCHSP) and the Hidalgo Independent School District (Hidalgo ISD)** to provide Head Start services to age and income eligible pre-K children as per the guidelines established by the Department of Health and Human Services (DHHS) and Texas Education Agency (TEA). The intentions are to collaboratively develop and foster a cohesive partnership to provide a high quality early childhood program for children and their families; to ensure that each Agency assumes the responsibility to communicate with the other and share leadership responsibilities to maximize resources; and to ensure that these collaboration arrangements between **Hidalgo ISD** and **HCHSP** are developed, implemented, and reviewed annually to improve quality of services.

HCHSP is a governmental entity under the auspices of Hidalgo County. **Hidalgo ISD** is a public education institution of the state of Texas. **HCHSP** and **Hidalgo ISD** each have Boards of Directors (Hidalgo County Head Start Policy Council, Hidalgo County Commissioners' Court and Hidalgo ISD Board of Trustees) established per applicable statues and local ordinances and/or procedures, which operate within the scope of their defined duties. Each Board has received information regarding the nature and scope of the proposed partnership and have, approved the partnership and granted signatory authority to the individual designated as authorized to bind their respective organizations. Signatory authorities are listed on the end of this agreement. Each designee shall ensure that their respective Board of Directors is informed of the various aspects and elements of this partnership agreement signature page.

The terms and conditions set forth in the following document shall constitute the entire agreement between **Hidalgo ISD** and **HCHSP** and may not be amended except by a written document signed by both entities.

Days and Hours of Operation:

Days of operation shall not be less than one-hundred seventy-eight (178) days, during the months of August through May. The daily operations will be from 7:45 am to 5:15 pm.
(Note: District Calendar will be developed and approved by both entities.)

Center Sites:

The names and addresses of the **HCHSP** sites that will be serviced by **Hidalgo ISD**:
Hidalgo Head Start Center
607 South 5th Street
Hidalgo, Texas 78557

Term:

The Term of this Memorandum of Understanding is for one (1) year commencing August 1, 2017 and ending July 31, 2018. Hidalgo County Head Start shall have the option of renewal to extend the term of

the MOU hereof, commencing on the first day of August of each year for the term of the Head Start grant or other terms as may be subsequently agreed to upon by both parties.

Hidalgo ISD Responsibilities:

Hidalgo ISD will provide appropriate educational and supportive services to ensure children and families are school ready. **Hidalgo ISD** shall comply with and provide in a satisfactory manner as outlined in the Head Start Performance Standards, the Head Start Act of 2007, guidance from the Office of Head Start (OHS), OMB circulars and as applicable either the Texas Education Agency (TEA), United States Department of Agriculture (USDA), or the Texas Department of Family and Protective Services (TDFPS) Childcare Licensing Regulations.

Program Description:

Eligible children are 3 or 4 year olds as of September 1, 2017, will be dual-enrolled and served by **Hidalgo ISD** and **HCHSP**. Collaboratively, the **HCHSP** children will receive 3 hours of instruction in cognitive development by a certified **Hidalgo ISD** funded **School Readiness Partnership Model (SRPM) teacher** in each classroom, and full day services by a Head Start teacher and an assistant teacher with credentials required by **HCHSP** in a designated facility meeting Head Start, Child Care Licensing and school district requirements.

Partnership Responsibilities:

A. **Hidalgo ISD** will:
   a. Assign a **Hidalgo ISD** principal, instructional coach/s, and/or other district liaison to the Hidalgo Head Start facility to provide supervision, oversight, support and evaluation of the **Hidalgo ISD** teachers.
   b. Provide certified early childhood teachers to deliver 3 hours of instruction in cognitive, physical, and social development to participating **HCHSP** children in each classroom.
   c. Coordinate efforts with **HCHSP** to identify at least 10% of funded enrollment of Head Start children with special needs and follow the referral process for identification and provision of services.
   d. Permit HCHSP representatives to attend ARDs conducted by **Hidalgo ISD** involving **HCHSP** children.
   e. Supplement health services, educational services, parental training and other services as required by the children and their families.
   f. Assign special education teachers to provide services to children who are identified in need of special services through the **Hidalgo ISD** Special Education Program.
   g. Arrange for a substitute when the **Hidalgo ISD** teacher is absent.
   h. Provide supplemental instructional resources essential to implement a high quality comprehensive early childhood education program.
   i. Meet monthly or on a regular basis with **HCHSP** designated personnel to facilitate the instructional process and other services.
   j. Provide an overview of the collaboration with the participating Administrators.
   k. Finance the **Hidalgo ISD** personnel and other resources as appropriate.
   l. Purchase and maintain a certificate of insurance for commercial general liability, i) Bodily Injury and Property Damage $300,000 ea. Occurrence, and ii) General Aggregate $600,000 **HCHSP** must be named as an additional insured.

B. The **Hidalgo ISD** Teacher/Staff will:

a. Provide 3 hours of daily instruction in cognitive development, physical, or social to the **HCHSP** children utilizing a research based State Adopted Curriculum the Texas Pre-kinder Guidelines (up dated 2015).
b. Attend and/or assist in delivery of collaborative Professional Development for **Hidalgo ISD** and **HCHSP** as deemed appropriate.
c. Participate with the **HCHSP** staff in the recruitment of children process.
d. Implement a curriculum which is research based designed to support the child's social, emotional, cognitive, and physical development.
e. Attend **HCHSP** collaboration meetings as deemed necessary during the school year.
f. Complete and fulfill the required documentation for **Hidalgo ISD** and **HCHSP** staffs with the assistance of both Human Resource Departments.
g. Collaborate and plan with the **HCHSP** teacher to provide high quality early childhood instruction and prevent a duplication of efforts.
h. Inform the Center Manager and **HCHSP** teacher when she/he is going to be absent and utilize the Substitute System to obtain a designated substitute.
i. Follow collaboration protocol with any issues/concerns which may arise.
j. Follow **Hidalgo ISD** requirements, policies and procedures as well as the Head Start Performance Standards and the Texas Child Care Licensing Minimum Standards.
k. Comply with any other responsibilities assigned by the immediate supervisor.
l. Coordinate efforts with the **HCHSP** staff to enroll the children in the district.

C. **HCHSP** will:

a. Provide classroom space in a state child care licensed facility which meets Head Start and school districts requirements, is appropriately staffed and furnished to deliver Head Start services based on the Head Start Standards, the Head Start Act, Child Care Licensing and district/state requirements.
b. Coordinate efforts with **Hidalgo ISD** to identify children with special needs and follow the **Hidalgo ISD** referral process for identification and services.
c. Identify personnel who will attend the ARDs conducted by **Hidalgo ISD**.
d. Assist with the distribution, completion, and submission of the required **Hidalgo ISD** student enrollment documents within the first week of a child's enrollment.
e. Coordinate with district staff to transition children to the Hidalgo ISD public schools at the end of each school year.
f. Provide assistance with daily attendance reporting.
g. Meet monthly or as needed with the designated **Hidalgo ISD** personnel.
h. Schedule a time for the **HCHSP** teacher and **Hidalgo ISD** teacher plan weekly to implement a high quality early childhood instruction and prevent a duplication of effort.
i. Ensure that the classroom size meets the adult/child ratio as required by state and federal standards.
j. Finance program operations based on the **HCHSP** grant.

D. Collaboratively **Hidalgo ISD** and **HCHSP** will:

a. Implement an early childhood program utilizing best early childhood practices.
b. Coordinate and collaborate to plan for instruction, share resources and intensify services to meet the needs of eligible four year old (Pre-K children) and three year old children.
c. Schedule a weekly planning time for lesson planning and preparation.

d. Share information on upcoming workshops and conferences on Early Childhood and Head Start.
e. Review program operations to avoid duplication of efforts.
f. Meet on a regular basis to discuss the progress of the collaboration.
g. Perform children's assessment and evaluation, and collaborative program evaluation, to meet **Hidalgo ISD** and **HCHSP** requirements.
h. Analyze and share data for program planning and improvement.
i. Work together to meet attendance goal.
j. Inform all stakeholders of the collaboration and Memorandum of Understanding (MOU).
k. Provide family services, parent engagement activities and home visits.
l. Support all events which promote the partnership.
m. Organize and plan to sustain the partnership and promote a collaborative culture.

Transportation Services

Assigned **Hidalgo ISD School Readiness Partnership Model** teachers will travel to **HCHSP** sites and provide instruction to students at such locations.

General Conditions

- This Agreement shall not serve to create a principal agent relationship, partnership or joint venture between the parties hereto, nor does it authorize either party to serve as the legal representative or agent of the other. Neither party shall have any right or authority to assume, create, or incur any liability or any obligation of any kind, expressed or implied or in the name of or on behalf of the other party, except as agreed in this MOU.
- It is expressly understood and agreed that, in the execution of the agreement, **Hidalgo ISD** and any other governmental entities named herein do not waive, nor shall be deemed hereby to waive, any immunity or defense that would otherwise be available to it against claims arising in the exercise of governmental powers and functions.
- Each party, at their own expense, shall provide and maintain, during the term of this agreement, insurance, with our without retention, or self-insurance program, which shall provide general liability coverage for liability, property damage, and bodily injury.
- This Agreement is made in Hidalgo County, Texas and shall constitute the complete understanding of **Hidalgo ISD** and **HCHSP,** and may not be modified in any manner without the express written consent of all parties.
    - Notwithstanding those rules and regulations or standards set by both laws and regulatory agencies, the parties agree that if a dispute arises related to this MOU, the parties will not be required to submit the dispute to arbitration, but to non-binding mediation in Hidalgo County, Texas.
    - This Memorandum of understanding is performable in Hidalgo County, Texas.
- Either party may terminate this Agreement, with or without cause by providing 30 days written notice to the other party.
- Each party shall, to the extent allowed by law, hold harmless and indemnify the other party on claims or losses sustained by individuals directly or indirectly involved with performance of services in connection with this Agreement.

Indemnification:

To the extent allowed by law, **HCHSP** will and does hereby agree to indemnify, protect, defend with counsel approved by Grantee Board, and hold harmless **Hidalgo ISD** and their respective elected officials, employees, representatives and agents (collectively "**Hidalgo ISD Indemnitees**") from and against all damages, losses, liens, causes of action, suits, judgments, expenses, and other claims of any nature, kind, or description, including reasonable attorneys' fees incurred in investigating, defending or settling any of the foregoing (collectively "**Hidalgo ISD Claims**") by any person or entity, arising out of, caused by, or resulting from **HCHSP's** performance under or breach of this Agreement and that are caused in whole or in part by any negligent act, negligent omission or willful misconduct of **HCHSP**, anyone directly employed by **HCHSP** or anyone for whose acts **HCHSP** may be liable. The provisions of this section will not be construed to eliminate or reduce any other indemnification or right which any **Hidalgo ISD** Indemnitee has by law or equity. All parties will be entitled to be represented by counsel at their own expense.

To the extent allowed by law, **Hidalgo ISD** will and does hereby agree to indemnify, protect, defend with counsel approved by **HCHSP** and **Hidalgo County**, and hold harmless **HCHSP** and **Hidalgo County**, and their respective elected officials, officers, directors, attorneys, employees, representatives and agents (collectively "**HCHSP Indemnitees**") from and against all damages, losses, liens, causes of action, suits, judgments, expenses, and other claims of any nature, kind, or description, including reasonable attorneys' fees incurred in investigating, defending or settling any of the foregoing (collectively "**HCHSP Claims**") by any person or entity, arising out of, caused by, or resulting from **HIDALGO ISD's** performance under or breach of this Agreement and that are caused in whole or in part by any negligent act, negligent omission or willful misconduct of **HIDALGO ISD** employees, anyone directly employed by the **HIDALGO ISD** or anyone for whose acts the **HIDALGO ISD** may be liable. The provisions of this Section will not be construed to eliminate or reduce any other indemnification or right which any **HCHSP** Indemnitee has by law or equity. All parties will be entitled to be represented by counsel at their own expense.

The below signed authorities agree to the statements in this document in order to develop a strong collaboration and an open communication system at all levels which will enable both **HIDALGO ISD** and **HCHSP** to provide the children the best services available.

Hidalgo Independent School District

_____ _____

Superintendent of Schools Date

Hidalgo County Head Start Program

_____ _____

Honorable Ramon Garcia
Hidalgo County Judge

Teresa Flores, Executive Director
Hidalgo County Head Start Program

_____ _____

Date

Date

ATTEST:

_____

Arturo Guajardo, Jr.

Hidalgo County Clerk

Approved As To Form:
Atlas, Hall & Rodriguez, LLP

By:_____
Stephen L. Crain

Approved As To Form:
Oxford & González, P.C.

By:_____
Ricardo González

Date Approved by Policy Council:
Date Approved by Commissioner's Court:

AI-59893 **Head Start** **16. F.**

CC - REGULAR

Meeting Date: 05/30/2017

Submitted For: Edmundo Garcia, HEAD START **Submitted By:** Linda Galaviz, HEAD START

Department: HEAD START

Information

CAPTION

Discussion/Approval of Request to Enter into a Memorandum of Understanding (MOU) between Tropical Texas Behavior Health and Hidalgo County Head Start Program.

BACKGROUND

Policy Council Approval: 05.17.17

Fiscal Impact

Attachments

MOU w Tropical Texas Behavior Health

Form Review

Inbox	Reviewed By	Date
Budget & Management	Veronica Ortiz	05/19/2017 10:20 AM
Final Approval	Monica Salinas	05/26/2017 02:58 PM
Form Started By: Linda Galaviz		Started On: 05/16/2017 09:43 AM
Final Approval Date: 05/26/2017		

Hidalgo County Head Start Program
Policy Council Agenda

DATE: May 17, 2017

SUBJECT: Discussion/Approval of Request to Enter into a Memorandum of Understanding (MOU) Between Hidalgo County Head Start Program and Tropical Texas Behavioral Health

RATIONALE/NEED: The memorandum of Understanding (MOU) is to collaborate with the Tropical Texas Behavioral Health to deliver services to Head Start Children and families.

RECOMMENDATION: Administration recommends approval.

COST: There is no cost.

RELATED INFORMATION INCLUDED: Memorandum of Understanding

****

INITIATED BY: Ambrosio Tovar, Procurement Director

REVIEWED BY: Mr. Edmundo Garcia, Assistant Director

EXECUTIVE DIRECTOR'S APPROVAL: Teresa Flores

MEMORANDUM OF AGREEMENT
BETWEEN
TROPICAL TEXAS BEHAVIORAL HEALTH
AND
HIDALGO COUNTY HEAD START PROGRAM

THIS MEMORANDUM OF AGREEMENT (this Memorandum) is entered into by **Tropical Texas Behavioral Health** (**TTBH**), a community mental health and intellectual and developmental disability center, and a governmental unit of the State of Texas under the provisions of Vernon's Texas Codes, Annotated, Health & Safety Code, §534.001, et. seq., and **Hidalgo County Head Start Program** (**HCHSP**) whose address is 1901 W. State Hwy 107, McAllen, Texas, for the purpose of establishing a continuity of care system for persons with mental illness.

In consideration of the mutual agreements contained within this Memorandum of Agreement and other good and valuable consideration, the receipt and sufficiency of which are acknowledged by both parties, **TTBH** and **HCHSP** agree as follows:

I.
HCHSP Obligations

Services.

a. Identify and refer to **TTBH** students in need of screening and assessment for treatment services.

b. Provide **TTBH**, its employees or agents access to its campuses for the purpose of establishing a continuity of care system. Such person(s) shall be allowed campus access on an as needed basis and at times and days mutually agreed upon by TTBH and HCHSP.

c. Collaborate with the Center's outreach worker(s) for the purpose of making referrals to **TTBH** and for the purpose of providing continued care, assessments and treatment of those students identified as requiring services from **TTBH** for mental illness.

Confidentiality. **HCHSP** must maintain the confidentiality of information received during the performance of this Memorandum, including information which discloses confidential personal information or identifies any person served by **TTBH**, in accordance with applicable federal and state laws.

HCHSP agrees to follow, undertake, or institute appropriate procedures of safeguarding client information with particular reference to client identifying information. The term "client identifying information" includes, but is not limited to, a client's medical record, graphs or charts; statements made by the client, either orally or in writing, while receiving services; photographs, videotapes, etc.; any acknowledgment that a person is or has been a client of the facility, **TTBH**, or other designated Contractor; and protective health information (PHI) as such term is defined by the federal Health Insurance Portability and Accountability Act (HIPAA), as amended. **HCHSP** agrees to comply with HIPAA and all regulations promulgated thereunder, including, but not limited to, all provisions governing the use and disclosure of PHI.

Non-Discrimination. **HCHSP** will ensure that no person, on the basis of race, color, national origin, religion, sex, age, handicap, or political affiliation, will be excluded from participation in, be denied the benefits of, or be subjected to discrimination under any of the policies of **TTBH**.

II.
TTBH Obligations

Services.

a. Provide staff, at times mutually agreed upon by **TTBH** and **HCHSP**, access to campuses for the purpose of conducting intake screenings and assessment of referrals by the **HCHSP**.

b. Provide mental health services, assessments and screenings to the identified student/family population at the designated location or through home visitation.

c. Collaborate with the **HCHSP** regarding provision of follow-up mental health services and assessments to eligible persons.

d. Provide service linkage to students for mental health services.

e. Provide services to **HCHSP** students and families who have been identified as being in need of these services in accordance with **TTBH** policy as capacity permits.

f. **HCHSP** acknowledges that as a service provider under agreement with **HCHSP** that **TTBH** has legitimate educational interest in the student data and information contained in the educational records provided to them in the execution of providing services to the **HCHSP**. **TTBH** agrees to keep confidential all educational records obtained by them and to comply with the Family Educational Rights and Privacy Act (FERPA) (20 U.S.C. §1232g; 34 CFR Part 99). Disclosure to third parties by **TTBH** shall be in strict compliance with all FERPA requirements or by obtaining the written consent of the parent(s) and/or legal guardian of the student(s).

III.
Insurance

HCHSP agrees to maintain at its sole cost and expense policies of general and liability insurance coverage in order to insure **HCHSP** and **TTBH** against any claim for damages, acts or omissions, which may arise in connection with this Memorandum, sufficient to meet the requirements of state law and workers' compensation insurance. **HCHSP** will furnish copies of said insurance policies and a certificate of insurance to **TTBH** upon request.

TTBH agrees to maintain at its sole cost and expense policies of general and liability insurance coverage in order to insure **TTBH** and **HCHSP** against any claim for damages, acts or omissions, which may arise in connection with this Memorandum, sufficient to meet the requirements of state law and workers' compensation insurance. **TTBH** will furnish copies of said insurance policies and a certificate of insurance to **HCHSP** upon request.

Nothing in this agreement shall be construed or interpreted to mean that the parties are engaged in a partnership, joint enterprise, or other cooperative arrangement other than what is stated in this agreement. The parties agree that they are independent contractors and are not borrowing servants under this agreement. Nothing in this agreement shall be construed or interpreted to mean that this provision requiring insurance by the parties obligates the parties to list the other as a loss beneficiary on any of the above described policies.

IV.
Indemnification

HCHSP hereby agrees, to the extent permitted under the laws of the State of Texas, to indemnify and hold harmless **TTBH**, its board, employees, and agents from all suits, actions, claims, costs or liability of any character, type or description, including attorneys' fees and legal expenses brought, made for, or on account of any death, injury or damage received or sustained by any person or property arising out of or occasioned by the acts or omissions of **HCHSP**, its board, employees, or agents, if any, whether occurring during the performance or execution of this agreement.

TTBH hereby agrees, to the extent permitted under the laws of the State of Texas, to indemnify and hold harmless **HCHSP**, its board, employees, and agents from all suits, actions, claims, costs or liability of any character, type or description, including attorneys' fees and legal expenses brought, made for, or on account of any death, injury or damage received or sustained by any person or property arising out of or occasioned by the acts or omissions of **TTBH**, its board, employees, or agents, if any, whether occurring during the performance or execution of this agreement.

The Parties agree that nothing in this agreement shall be interpreted or construed as a waiver of any governmental, sovereign, official, qualified and/or statutory immunity that the **HCHSP** is entitled to pursuant to Federal and State law.

V.
Miscellaneous

Term. This Memorandum of Agreement will be effective on May 1, 2017 and expire August 31, 2017 unless otherwise terminated as provided herein.

Amendments. This Memorandum of Agreement may only be amended by written agreement between **HCHSP** and **TTBH**.

Termination. This Memorandum of Agreement may be terminated by either party upon ten (10) days written notice to the other party of its intent to terminate the Memorandum.

Assignment. No assignment of this Memorandum or the rights and obligations hereunder will be valid without the written consent of the non-assigning party.

Entire Agreement. This Memorandum of Agreement constitutes the entire agreement of the parties and supersedes any prior understandings or oral or written agreements between **TTBH** and **HCHSP** on the matters contained herein. No modification, alteration, or waiver of any term, covenant, or condition of this Memorandum shall be valid unless in writing and executed by the parties hereto.

Notice. Except as expressly provided within this Memorandum, any notice required or permitted to be given under this Memorandum must be in writing and delivered in person or by registered or certified mail, return receipt requested, postage prepaid, to the individual and address shown below:

HIDALGO COUNTY PROGRAM

Teresa Flores
Executive Director
P.O. Box 0117
Edinburg, Texas 78540

TTBH

W. Terry Crocker
Chief Executive Officer
P. O. Drawer 1108
Edinburg, TX 78540

or to such other individual and address as provided in writing to the other party by the means specified above. The notice shall be effective on the date of delivery.

Other Agreements. **TTBH** and **HCHSP** agree that this Memorandum of Agreement shall not constitute a modification, amendment, waiver or change of any of the terms of any prior agreements between these parties.

Governing Law
This Memorandum of Understanding will be construed in accordance with the Laws of the State of Texas and is performable in Hidalgo County, Texas.

Consideration
This Agreement is being made in consideration of the following: Texas A&M Health Science Center/School of Public Health and Hidalgo County Head Start Program agree that there will be no financial exchange of monies or other compensation.
The parties have executed this Memorandum of Agreement on the dates set forth below their signatures.

Tropical Texas Behavioral Health

_____
Authorized Signature Date

W. Terry Crocker, Chief Executive Officer
Print Name and Title

Hidalgo County Head Start Program

_____
Honorable Ramon Garcia
Hidalgo County Judge

_____
Date

_____
Teresa Flores, Executive Director
Hidalgo County Head Start Program

_____
Date

ATTEST:

_____
Arturo Guajardo, Jr.
Hidalgo County Clerk

Approved As To Form:
Atlas, Hall & Rodriguez, LLP

By:_____
Stephen L. Crain

Approved As To Form:
Oxford & González, P.C.

By:_____
Ricardo González

Date Approved by Policy Council:
Date Approved by Commissioner's Court:

AI-59894 **Head Start** **16. G.**

CC - REGULAR

Meeting Date: 05/30/2017

Submitted For: Edmundo Garcia, HEAD START **Submitted By:** Linda Galaviz, HEAD START

Department: HEAD START

Information

CAPTION

Discussion/Approval to award classroom space (as attached hereto) for sealed bids on Lease of Classroom Space for the following area:
a. Classroom Space - Mercedes RFB# 2017-001-03-31

BACKGROUND

Policy Council Approval: 05.17.17

Fiscal Impact

Attachments

Classroom Space Mercedes Area backup

Form Review

Inbox	Reviewed By	Date
Budget & Management	Veronica Ortiz	05/19/2017 10:20 AM
Final Approval	Monica Salinas	05/26/2017 02:58 PM
Form Started By: Linda Galaviz		Started On: 05/16/2017 09:46 AM
Final Approval Date: 05/26/2017		

Hidalgo County Head Start Program
Policy Council Agenda Request

DATE: May 17, 2017

SUBJECT: Discussion/Approval to Award Classroom Space (as attached hereto) for Sealed Bids on Lease of Classroom Space for the Following Area:

Classroom Space-Mercedes RFB# 2017-001-03-31

RATIONALE/NEED: To contract for Classroom Space to serve families in the Mercedes area.

RECOMMENDATION: Administration recommends approval

COST: Head Start (HHS-ACF) funds for this project are available.
Rent: Account 19-5152-20-10000-505

RELATED INFORMATION INCLUDED: Lease Agreement

* * * *

STATE OF TEXAS §
§
COUNTY OF HIDALGO §

LEASE AGREEMENT BETWEEN
RAYBEC HERENCIA, LLC
AND HIDALGO COUNTY

This Lease is made and entered into by and between Raybec Herencia, LLC., herein referred to as the "LESSOR" and Hidalgo County acting by and through its Head Start Program, herein referred to as the "LESSEE" in the Lease.

In consideration of the mutual covenants and agreements set forth in this Lease, and other good and valuable consideration, LESSOR demises and leases to LESSEE, and LESSEE leases from LESSOR, that certain building described as the Head Start building lying and being situated **at 100 La Herencia Dr. Mercedes, TX 78570** in and depicted in Exhibit "A", attached hereto. The premises leased hereunder are referred to in this Lease as "the premises" known by lessee as "La Herencia Head Start", or "the Leased Premises."

ARTICLE 1. TERMS AND RENT

Term of Lease

1.01 The Leased Premises shall be used for the purpose of Head Start classrooms and for Head Start parent's meetings subject to the special terms (if any) which may be listed below. The Leased Premises are deemed for the purposes of this Agreement to constitute all 100% percent of such building in which the Leased Premises are located.

1.02 Except as otherwise provided herein, the initial term of this lease shall be for twelve (12) months commencing on June 1, 2017 ("commencement date") and ending on May 31, 2018, ("termination date") unless sooner terminated as provided in this Lease, or unless renewed and extended in accordance with Paragraph 1.03, hereof.

Renewal or Termination

1.03 Provided LESSEE has not defaulted in any of the terms, conditions or provisions thereof, LESSEE shall be given the right of renewal and extend the term of the lease hereof, commencing on the first day of **June, 2018**, for a like term or terms as may be subsequently agreed to upon by both parties.

LESSEE shall have the right to terminate the Lease Agreement with or without cause with sixty (60) days written notice to the LESSOR.

1.04 LESSEE shall comply with the Texas Department of Human Services Inspection in regards to the number of children that can safely occupy the building at any one time.

Base Rent

1.05 LESSEE agrees to pay LESSOR the maximum rent amount of $ 3,600, in twelve (12) equal monthly payments of $ 300.00 per month payable on the 1st day of each month. Payment shall be mailed to, 7855 Gross Point Rd # F Skokie, Il 60077

1.06 LESSOR covenants and agrees that LESSEE on paying the rent and other charges herein provided for and observing and keeping the covenants, conditions, and terms of this Lease on LESSEE'S part to be kept or performed, shall lawfully and quietly hold, occupy, and enjoy the Leased Premises during the term of this Lease without hindrance or disruption by LESSOR or any person claiming under LESSOR except such portion of the Leased Premises, if any as shall be taken under the power of eminent domain.

LESSEE shall accept possession of Leased Premises and equipment (if any) in their present condition and location.

ARTICLE 2. TAXES

Taxes

2.01 LESSOR shall pay all real property taxes assessments until this Lease either expires or terminates as provided herein.

2.02 LESSOR shall pay all personal property taxes and assessments on such Leased Premises as presently owned by LESSOR.

ARTICLE 3. MAINTENANCE ON PREMISES

3.01 LESSOR agrees to maintain the Leased Premises in a condition suitable for use for which this lease is intended.

3.02 LESSOR will keep all and singular the said building, including all of LESSOR'S improvements, fixtures, appurtenances, equipment and machinery in such repair as the same were at the commencement of the term. All repairs shall be at LESSOR'S expense and shall remain the property of the LESSOR at the termination of the lease.

3.03 LESSEE shall provide housekeeping services for said premises, limited to sweeping, mopping and emptying trash cans, at most, every two (2) working days, and waxing floors not more often than every two (2) weeks.

3.04 In the event that the Leased Premises are destroyed by flood or other casualty, the parties agree that this lease will be terminated and shall not be in force and effect during that period of time while the Leased Premises cannot be used for the purposes intended by Agreement.

3.05 It is agreed that all improvements made to or furnished by the LESSEE on the Leased Premises shall not become part of the realty and shall belong to LESSEE upon expiration of the lease and may be removed upon termination of the Lease or any extension hereof; provided, further, that all removal of such chattels will not damage the building upon which they are situated.

3.06 LESSEE shall maintain the land during this lease and will provide all major repairs at its own expense.

ARTICLE 4. UTILITIES

Utility Charges

4.01 LESSEE shall pay the charges for the water, sewer, garbage, trash pick-up services, telephone, gas and electricity furnished to the Lease Premises during the term of this lease.

ARTICLE 5. INSURANCE AND INDEMNITY

Property Insurance

5.01 LESSOR shall insure the building and equipment covered by this lease against fire, accident, or natural disaster. In the event the building(s), or equipment or any part thereof shall, during said term or any renewal hereof, be destroyed by fire, accident, or natural disaster the same shall be thereby rendered unfit for use and habitation, then and in such case, the rent heretofore reserved, or a just and proportionate part thereof, according to the nature and extent of the injury sustained, shall be suspended or abated until said Lease Premises shall have been put in proper condition for use and habitation, by LESSEE or this lease Agreement shall thereby be terminated and ended at the election of LESSEE or its legal representatives.

5.02 To the extent allowable under law, LESSEE agrees to hold LESSOR harmless for any liability for any accident or other legal cause of action based upon any tort which occurs on the Lease Premises, caused solely by LESSEE, its agent or employees.

5.03 LESSEE agrees that, during the term of this lease, it shall have in effect a liability insurance policy to protect LESSOR from any third party claims that may arise as a result of injuries caused to any person upon the premises herein described. The limits of this policy shall be not less than $100,000.00 per person and $300,000.00 per occurrence.

ARTICLE 6. MISCELLANEOUS

6.01 This Agreement shall be binding upon and insure to the benefit of the parties hereto and their respective successors, but LESSEE shall not assign any part of the premises.

6.02 LESSEE will not cause to be carried upon the premises any trade or business, which increases the rate of insurance premiums on the Leased Premises, building(s) or contents.

6.03 This Agreement shall be construed under and in accordance with the laws of the State of Texas and all obligations of parties created hereunder are performable in Hidalgo County, Texas.

6.04 Commitment of Current Revenues Only. In the event that, during any term hereof, the County does not appropriate sufficient funds to meet the obligations of such party under this Agreement, then the LEESEE may terminate this Agreement upon sixty (60) days written notice to the other party. Both parties agree, however to use their best efforts to secure funds necessary for the continued performance of this Agreement. The parties intend these provisions to be a continuing right to terminate this Agreement at the expiration of each budget period of the parties.

WAIVER OF BREACH

A waiver by either LESSOR or LESSEE of a breach of this Lease by the other party shall not constitute a continuing wavier or waiver of any subsequent breach of the Lease.

ARTICLE 7. MISCELLANEOUS

Notices and Addresses

7.01 All notices required under this Lease will be deemed delivered when deposited in certified or registered mail, addressed to the proper party, at the following addresses:

LESSEE:
Hidalgo County Head Start Program
Attn: Teresa Flores, Executive Director
P.O. Box 0117
Edinburg, TX. 78540-0117

LESSOR:
Raybec Herencia, LLC
Attn: Ron Berman
78555 Gross Point # F
Skokie, Il 60077

Either party may change the address to which notices are to be sent in by giving the other party notice of the new address in the manner provided in this section.

Legal Construction

In case any one or more of the provisions contained in this Agreement shall for any reason be held by the court of competent jurisdiction to be invalid, illegal, or unenforceable in any respect, such invalidity, illegality, or unenforceability shall not affect any other provisions of the agreement, and this agreement shall be construed as if the invalid illegal, or unenforceable provision had never been included in the Agreement.

Prior Agreement

This Agreement constitutes the sole and only agreement of the parties to the Agreement and supersedes any prior understandings or written or oral Agreements between the parties respecting the subject matter of this Agreement.

Amendment

No amendment, modification, or alteration of the terms of this Agreement shall be binding unless it is in writing, dated subsequent to the date of this Agreement, and duly executed by the parties to this Agreement.

Rights and Remedies Cumulative

The rights and remedies provided by this Lease agreement are cumulative, and the use of any one right or remedy by either party shall not preclude or waive that party's right to use any or all other remedies. The rights and remedies provided in this Lease are in addition to any other rights the parties may have by law, statute, ordinance or otherwise.

Attorney's Fees and Costs

If, as a result of a breach of this Agreement by either party, the other party employs an attorney or attorneys to enforce its rights under this Lease, then the breaching or defaulting party agrees to pay the other party the reasonable attorney's fees and cost incurred to enforce the Lease, as awarded by a court of competent jurisdiction.

Force Majeure

Neither LESSOR nor LESSEE shall be required to perform any term, conditions, or covenant in this Lease so long as such performance is delayed or prevented by force majeure, which shall mean acts of God, strikes, lockouts, material or labor restrictions by any governmental authority, civil riot, floods, and other cause not reasonably within the control of LESSOR or LESSEE and which by the exercise of due diligence LESSOR or LESSEE is unable, wholly or in part, to prevent or overcome.

Estoppel Information

LESSEE shall, at the request of LESSOR, provide any and all information with respect to this Lease to any person designated by LESSOR.

Time of Essence

Time is of the essence of this Agreement.

THE UNDERSIGNED LESSOR and LESSEE execute this Lease on the day of _____, 2017

LESSEE:

BY: _____
Ramon Garcia, County Judge

BY: _____
Teresa Flores, Executive Director

LESSOR:

BY: _____
Ron Berman

ATTEST:

BY: _____
Arturo Guajardo, Jr.,
Hidalgo County Clerk

APPROVED AS TO FORM:
Oxford & Gonzalez

BY: _____
Ricardo Gonzalez

APPROVED AS TO FORM:
Atlas, Hall & Rodriguez, LLP

BY: _____
Stephen Crain

Date Approved by Policy Council:
Date Approved by County Commissioners:

EXHIBIT "A"

Property being described all of lot 1, La Herencia Aprtments, subdivision an addition to the City of Mercedes, Hidalgo County, Texas. According to the plat thereof recorded in Volume 1, page 2. Designated as Head Start Classrooms, administrative space, including the parking areas and outside playground for recreational activities.

CERTIFICATE OF INTERESTED PARTIES

FORM 1295

Complete Nos. 1 - 4 and 6 if there are interested parties.
Complete Nos. 1, 2, 3, 5, and 6 if there are no interested parties.

OFFICE USE ONLY
CERTIFICATION OF FILING

Certificate Number:
2017-202445

Date Filed:
05/04/2017

Date Acknowledged:

1 Name of business entity filing form, and the city, state and country of the business entity's place of business.
Raybec Herencia
Skokie, IL United States

2 Name of governmental entity or state agency that is a party to the contract for which the form is being filed.
Hidalgo County Head Start Program

3 Provide the identification number used by the governmental entity or state agency to track or identify the contract, and provide a description of the services, goods, or other property to be provided under the contract.
C-17-001-06-01
Classroom Space

4 Name of Interested Party	City, State, Country (place of business)	Nature of interest (check applicable)	
		Controlling	Intermediary

5 Check only if there is NO Interested Party. [X]

6 AFFIDAVIT

I swear, or affirm, under penalty of perjury, that the above disclosure is true and correct.

OFFICIAL SEAL
MARVIN FEIGER
NOTARY PUBLIC - STATE OF ILLINOIS
MY COMMISSION EXPIRES:02/08/19

Signature of authorized agent of contracting business entity

AFFIX NOTARY STAMP / SEAL ABOVE

Sworn to and subscribed before me, by the said Steve Hanks, this the 5 day of May, 20 17, to certify which, witness my hand and seal of office.

Signature of officer administering oath | Printed name of officer administering oath | Title of officer administering oath

STATE OF TEXAS §
§
COUNTY OF HIDALGO §

LEASE AGREEMENT BETWEEN
RAYBEC HERENCIA, LLC
AND HIDALGO COUNTY

This Lease is made and entered into by and between Raybec Herencia, LLC., herein referred to as the "LESSOR" and Hidalgo County acting by and through its Head Start Program, herein referred to as the "LESSEE" in the Lease.

In consideration of the mutual covenants and agreements set forth in this Lease, and other good and valuable consideration, LESSOR demises and leases to LESSEE, and LESSEE leases from LESSOR, that certain building described as the Head Start building lying and being situated **at 100 La Herencia Dr. Mercedes, TX 78570** in and depicted in Exhibit "A", attached hereto. The premises leased hereunder are referred to in this Lease as "the premises" known by lessee as "La Herencia Head Start", or "the Leased Premises."

ARTICLE 1. TERMS AND RENT

Term of Lease

1.01 The Leased Premises shall be used for the purpose of Head Start classrooms and for Head Start parent's meetings subject to the special terms (if any) which may be listed below. The Leased Premises are deemed for the purposes of this Agreement to constitute all 100% percent of such building in which the Leased Premises are located.

1.02 Except as otherwise provided herein, the initial term of this lease shall be for twelve (12) months commencing on June 1, 2017 ("commencement date") and ending on May 31, 2018, ("termination date") unless sooner terminated as provided in this Lease, or unless renewed and extended in accordance with Paragraph 1.03, hereof.

Renewal or Termination

1.03 Provided LESSEE has not defaulted in any of the terms, conditions or provisions thereof, LESSEE shall be given the right of renewal and extend the term of the lease hereof, commencing on the first day of **June, 2018**, for a like term or terms as may be subsequently agreed to upon by both parties.

LESSEE shall have the right to terminate the Lease Agreement with or without cause with sixty (60) days written notice to the LESSOR.

1.04 LESSEE shall comply with the Texas Department of Human Services Inspection in regards to the number of children that can safely occupy the building at any one time.

Base Rent

1.05 LESSEE agrees to pay LESSOR the maximum rent amount of $ 3,600, in twelve (12) equal monthly payments of $ 300.00 per month payable on the 1st day of each month. Payment shall be mailed to, 7855 Gross Point Rd # F Skokie, Il 60077

1.06 LESSOR covenants and agrees that LESSEE on paying the rent and other charges herein provided for and observing and keeping the covenants, conditions, and terms of this Lease on LESSEE'S part to be kept or performed, shall lawfully and quietly hold, occupy, and enjoy the Leased Premises during the term of this Lease without hindrance or disruption by LESSOR or any person claiming under LESSOR except such portion of the Leased Premises, if any as shall be taken under the power of eminent domain.

LESSEE shall accept possession of Leased Premises and equipment (if any) in their present condition and location.

ARTICLE 2. TAXES

Taxes

2.01 LESSOR shall pay all real property taxes assessments until this Lease either expires or terminates as provided herein.

2.02 LESSOR shall pay all personal property taxes and assessments on such Leased Premises as presently owned by LESSOR.

ARTICLE 3. MAINTENANCE ON PREMISES

3.01 LESSOR agrees to maintain the Leased Premises in a condition suitable for use for which this lease is intended.

3.02 LESSOR will keep all and singular the said building, including all of LESSOR'S improvements, fixtures, appurtenances, equipment and machinery in such repair as the same were at the commencement of the term. All repairs shall be at LESSOR'S expense and shall remain the property of the LESSOR at the termination of the lease.

3.03 LESSEE shall provide housekeeping services for said premises, limited to sweeping, mopping and emptying trash cans, at most, every two (2) working days, and waxing floors not more often than every two (2) weeks.

3.04 In the event that the Leased Premises are destroyed by flood or other casualty, the parties agree that this lease will be terminated and shall not be in force and effect during that period of time while the Leased Premises cannot be used for the purposes intended by Agreement.

3.05 It is agreed that all improvements made to or furnished by the LESSEE on the Leased Premises shall not become part of the realty and shall belong to LESSEE upon expiration of the lease and may be removed upon termination of the Lease or any extension hereof; provided, further, that all removal of such chattels will not damage the building upon which they are situated.

3.06 LESSEE shall maintain the land during this lease and will provide all major repairs at its own expense.

ARTICLE 4. UTILITIES

Utility Charges

4.01 LESSEE shall pay the charges for the water, sewer, garbage, trash pick-up services, telephone, gas and electricity furnished to the Lease Premises during the term of this lease.

ARTICLE 5. INSURANCE AND INDEMNITY

Property Insurance

5.01 LESSOR shall insure the building and equipment covered by this lease against fire, accident, or natural disaster. In the event the building(s), or equipment or any part thereof shall, during said term or any renewal hereof, be destroyed by fire, accident, or natural disaster the same shall be thereby rendered unfit for use and habitation, then and in such case, the rent heretofore reserved, or a just and proportionate part thereof, according to the nature and extent of the injury sustained, shall be suspended or abated until said Lease Premises shall have been put in proper condition for use and habitation, by LESSEE or this lease Agreement shall thereby be terminated and ended at the election of LESSEE or its legal representatives.

5.02 To the extent allowable under law, LESSEE agrees to hold LESSOR harmless for any liability for any accident or other legal cause of action based upon any tort which occurs on the Lease Premises, caused solely by LESSEE, its agent or employees.

5.03 LESSEE agrees that, during the term of this lease, it shall have in effect a liability insurance policy to protect LESSOR from any third party claims that may arise as a result of injuries caused to any person upon the premises herein described. The limits of this policy shall be not less than $100,000.00 per person and $300,000.00 per occurrence.

ARTICLE 6. MISCELLANEOUS

6.01 This Agreement shall be binding upon and insure to the benefit of the parties hereto and their respective successors, but LESSEE shall not assign any part of the premises.

6.02 LESSEE will not cause to be carried upon the premises any trade or business, which increases the rate of insurance premiums on the Leased Premises, building(s) or contents.

6.03 This Agreement shall be construed under and in accordance with the laws of the State of Texas and all obligations of parties created hereunder are performable in Hidalgo County, Texas.

6.04 Commitment of Current Revenues Only. In the event that, during any term hereof, the County does not appropriate sufficient funds to meet the obligations of such party under this Agreement, then the LEESEE may terminate this Agreement upon sixty (60) days written notice to the other party. Both parties agree, however to use their best efforts to secure funds necessary for the continued performance of this Agreement. The parties intend these provisions to be a continuing right to terminate this Agreement at the expiration of each budget period of the parties.

WAIVER OF BREACH

A waiver by either LESSOR or LESSEE of a breach of this Lease by the other party shall not constitute a continuing wavier or waiver of any subsequent breach of the Lease.

ARTICLE 7. MISCELLANEOUS

Notices and Addresses

7.01 All notices required under this Lease will be deemed delivered when deposited in certified or registered mail, addressed to the proper party, at the following addresses:

LESSEE:
Hidalgo County Head Start Program
Attn: Teresa Flores, Executive Director
P.O. Box 0117
Edinburg, TX. 78540-0117

LESSOR:
Raybec Herencia, LLC
Attn: Ron Berman
78555 Gross Point # F
Skokie, Il 60077

Either party may change the address to which notices are to be sent in by giving the other party notice of the new address in the manner provided in this section.

Legal Construction

In case any one or more of the provisions contained in this Agreement shall for any reason be held by the court of competent jurisdiction to be invalid, illegal, or unenforceable in any respect, such invalidity, illegality, or unenforceability shall not affect any other provisions of the agreement, and this agreement shall be construed as if the invalid illegal, or unenforceable provision had never been included in the Agreement.

Prior Agreement

This Agreement constitutes the sole and only agreement of the parties to the Agreement and supersedes any prior understandings or written or oral Agreements between the parties respecting the subject matter of this Agreement.

Amendment

No amendment, modification, or alteration of the terms of this Agreement shall be binding unless it is in writing, dated subsequent to the date of this Agreement, and duly executed by the parties to this Agreement.

Rights and Remedies Cumulative

The rights and remedies provided by this Lease agreement are cumulative, and the use of any one right or remedy by either party shall not preclude or waive that party's right to use any or all other remedies. The rights and remedies provided in this Lease are in addition to any other rights the parties may have by law, statute, ordinance or otherwise.

Attorney's Fees and Costs

If, as a result of a breach of this Agreement by either party, the other party employs an attorney or attorneys to enforce its rights under this Lease, then the breaching or defaulting party agrees to pay the other party the reasonable attorney's fees and cost incurred to enforce the Lease, as awarded by a court of competent jurisdiction.

Force Majeure

Neither LESSOR nor LESSEE shall be required to perform any term, conditions, or covenant in this Lease so long as such performance is delayed or prevented by force majeure, which shall mean acts of God, strikes, lockouts, material or labor restrictions by any governmental authority, civil riot, floods, and other cause not reasonably within the control of LESSOR or LESSEE and which by the exercise of due diligence LESSOR or LESSEE is unable, wholly or in part, to prevent or overcome.

Estoppel Information

LESSEE shall, at the request of LESSOR, provide any and all information with respect to this Lease to any person designated by LESSOR.

Time of Essence

Time is of the essence of this Agreement.

THE UNDERSIGNED LESSOR and LESSEE execute this Lease on the day of _____, 2017

LESSEE:

BY: _____
Ramon Garcia, County Judge

BY: _____
Teresa Flores, Executive Director

LESSOR:

BY: _____
Ron Berman

ATTEST:

BY: _____
Arturo Guajardo, Jr.,
Hidalgo County Clerk

APPROVED AS TO FORM:
Oxford & Gonzalez

BY: _____
Ricardo Gonzalez

APPROVED AS TO FORM:
Atlas, Hall & Rodriguez, LLP

BY: _____
Stephen Crain

Date Approved by Policy Council:
Date Approved by County Commissioners:

EXHIBIT "A"

Property being described all of lot 1, La Herencia Apartments, subdivision an addition to the City of Mercedes, Hidalgo County, Texas. According to the plat thereof recorded in Volume 1, page 2. Designated as Head Start Classrooms, administrative space, including the parking areas and outside playground for recreational activities.

AI-59896 **Head Start** **16. H.**

CC - REGULAR

Meeting Date: 05/30/2017

Submitted For: Edmundo Garcia, HEAD START **Submitted By:** Linda Galaviz, HEAD START

Department: HEAD START

Information

CAPTION

Discussion/Approval to Declare Obsolete the Attached List of Items and Transfer Items to County's Surplus Department for Proper Disposition

BACKGROUND

Policy Council Approval: 05.17.17

Fiscal Impact

Attachments

Obsolete Items

Form Review

Inbox	Reviewed By	Date
Budget & Management	Veronica Ortiz	05/19/2017 10:20 AM
Final Approval	Monica Salinas	05/26/2017 02:58 PM
Form Started By: Linda Galaviz		Started On: 05/16/2017 09:50 AM
Final Approval Date: 05/26/2017		

Hidalgo County Head Start Program

Policy Council Regular Agenda

DATE: May 17, 2017

SUBJECT: Discussion/Approval to Declare Obsolete the Attached List of Items and Transfer Items to the County's Approved Auctioneer Vendor for Proper Disposition

RATIONALE/NEED: The items listed on the attached surplus materials/equipment list are not in operating condition, they are old and beyond any possible repair. The Policy Council and Commissioners' Court must approve the disposition of these items.

RECOMMENDATION: Administration recommends approval.

COST: N/A

RELATED INFORMATION INCLUDES: Memorandum and List of Surplus Materials and Equipment

****

INITIATED BY: Oscar Palacios, Field Operations Director

REVIEWED BY: Edmundo Garcia, Assistant Director for Operations

EXECUTIVE DIRECTOR'S APPROVAL: Teresa Flores

MEMORANDUM



To: Edmundo Garcia, Assistant Program Director

From: Oscar Palacios, Field Operations Director

Subj.: Surplus materials/equipment/vehicles

Date: May 8, 2017

CC: Teresa Flores, Executive Director
Elma Carrera, CFO
Cynthia Castro, Administrator for Human Resources
Files

After review and evaluation of our inventory of vehicles, supplies and equipment, I am attaching for the consideration and approval a comprehensive list of items that have been determined to be obsolete.

These items have been categorized as surplus, due to their state of disrepair, age and/or unacceptable under State Licensing regulations.

Once authorization is obtained from the Policy Council and Commissioner's Court I will transfer these items to the county to be placed on the next scheduled auction on June 7, 2017.

Attachments

2017 Auction List

Description	Inventory Tag #	Serial/Model #	Qty
ELECTRONICS	***	***	*
cd player/radio			15
rca tv 42			1
record player			4
black tv		v43910990	
tv set pf	00104		
tv	000135		1
APPLIANCES	***	***	*
refrigerator			1
stainless steel sink	N/A		1
FURNITURE	***	***	*
gray metal desk	013186		1
brown desk			1
metal shelves			3
2 drawer file cabinet			1
2 drawer file cabinet	015443		1
2 drawer file cabinet	18882		1
2 drawer file cabinet	014231		1
4 drawer file cabinet	013922		1
4 drawer file cabinet	001079		1
2 door file cabinet	014689		1
2 door file cabinet	006718		1
2 door file cabinet	001551		1
2 door file cabinet	008985		1
2 door file cabinet			2
2 door cabinet	008618		1
2 door file cabinet			1
4 drawer file cabinet	009078		1
wooden chair			2
wood shelf w/ door			1
cabinet			1
metal chair			5
computer desk			1
4 drawer file cabinet	009465		1
4 drawer file cabinet	008386		1
4 drawer file cabinet			1

office chair	18493		1
classroom chairs			28
classroom table			1
medication cabinet	008302		1
medication cabinet	015298		1
office chair			1
rectangular table			1
rectangular table broken			1
sand water table			1
computer desk			1
classroom chairs			28
table			1
medication cabinet	008302		1
medication cabinet	015298		1
tables			8
office chair	009482		1
office chair			2
CHILDRENS FURNITURE	***	***	*
sleeping cots			3
cots			12
childrens chair			3
cots broken			3
yellow chair			1
broken cot			1
blue chair			1
sleeping cots			3
TOYS	***	***	*
toy mop and broom holder			3
toy telephone booth	008987/008259		2
toy work shop	000323		1
toy work shop			4
box of puppets			1
toy sink			1
box of dolls			1
bike			2
kett car			2
helmet			2
plastic basket ball board			1
plastic basket ball and football net			1
plastic basket ball pole & board			1
children slides			1

box of toys			1
toy mirror			1
DISABILITY EQUIPMENT	***	***	*
JANITORIAL EQUIPMENT	***	***	*
vacumm			3
vacumm bag (u)			7
vacumm filters			3
vacumm bag (a)			1
vacumm bag (t)			3
mop buckets			8
mop handels			4
mop bucket			2
vacumm filter (dcf21)			3
KITCHEN EQUIPMENT	***	***	*
plates			32
bowls			10
7oz cups			61
large plates			3
small bowls			110
2oz serving spoon			51
serving tongues			5
serving scoops			6
spreading knifes			122
3 compartment plates			60
dish drainers			8
bowls			47
cups			264
big can opener			3
serving tongues			12
cups			146
3 compartment plates			26
small bowls			59
tubs			14
forks			150
squeez bottles			12
serving spoons			26
spatula			8
scoop mechanical			56
serving tongues			3
hamilton beach food processor			1
dish drainers			4

freezer tracks			17
oven racks			8
cutting boards			4
warmers			11
food carts			11
\big food whisker			2
robot coupe food processor	16411	2461502503y-04	1
classic apw/wyott 20"warmer 17		802521009754	
		802521009741	
		8025210091096	
		8025210091109	
		8025210091116	
		8025210091117	
		8025210091106	
		8025210091071	
		8025210091115	
		8025210091105	
		802521007978	
		8025210091103	
		802521009747	
		8025210091100	
		0712006403	
		802521009106	
blenders			4
better homes food processor			1
hamilton beach food processor			1
magic chef mini food processor			1
lunch bags			10
32oz pitchers			76
60oz pitchers			21
blenders			4
better homes food processor			1
hamilton beach food processor			1
magic chef mini food processor			1
lunch bags			10
32oz pitchers			76
60oz pitchers			21
AUTOMOTIVE	***	***	
bus tire			1
bus tires			3
tires			12
black tires			4
ELECTRICAL/AIR COND.	***	***	

a/c compressor unit	01444		
OUTDOOR EQUIPMENT	***	***	
TOOLS	***	***	
ms271 stihl chainsaw			1
dewalt cordless drill	18848		1
dewalt cordless drill	20300		1
dewalt cordless drill	17787		1
VEHICLES			
MISC.			
head phones			77
projectors			2
laminating machine			1
easel			7
shredder			3
chart tablet holder			1
laminating film roll			2
partion folder			167
paper towel holder			2
paint 1 box (assorted)			1
electric calculator			3
health o meter	2463		1
3 step ladder			1
easel			1
charts holder			2
utility trailer			3
headphone set	5720		1
trashcan			1
pressure washer		e4122120060687	
paint sprayer	16612	204530	
wheel barrel			1
water heater electric			4
old balance beams			2
health o meter	2463		1
3 step ladder			1
easel			1
charts holder			2
fake tree			1

bulletin boards			8

HCHSP Inventory for 2017 Auction					
Description	Model Type	Serial Nº	Tag	Barcode	Status
Battery Backup	APC 1500 Back-UPS	QB0524336862	None	None	Damaged
Camera	Sony Cyber-Shot DSC-F717 5.0 Mega Pixels	1334235	015435	None	Damaged
Camera-Surv	AT ADCPWH3895CN	907TPB0607	None	00002967	Damaged
Camera-Surv	AT ADCPWH3895CN	907TPB0748	None	00003028	Damaged
Camera-Surv	AT ADCPWH3895CN	907TPB0755	None	00003046	Damaged
Camera-Surv	ADC733	16245788	None	None	Damaged
Camera-Surv	ADCP3895CN	907TPB0197	None	None	Damaged
Camera-Surv	AT ADCPWH3895CN	907TPB0148	None	None	Damaged
Camera-Surv	AT ADCPWH3895CN	907TPB0165	None	None	Damaged
Camera-Surv	AT ADCPWH3895CN	907TPB0753	None	None	Damaged
Camera-Surv	AT ADCPWH3895CN	907TPB1392	None	None	Damaged
Camera-Surv	AT ADCPWH3895CN	907TPB1311	None	None	Damaged
Camera-Surv	AT ADCPWH3895CN	907TPB0168	None	None	Damaged
Camera-Surv	AT ADCPWH3895CN	907TPB0167	None	None	Damaged
Camera-Surv	Do721 700TVL (Outdoor Dome)	12312880	None	None	Damaged
Dish Receiver	EchoStar 3000	YDEBIG30381D	None	None	Damaged
Drill	Cordless DeWalt 12v DCD760	863057	None	None	Damaged
Fax Machine	Kyocera Mita KM-F650	AFF4004978	16017	None	Poor
Fax Machine	Kyocera Mita KM-F650	UPN6501866	18140	None	Poor
Fax Machine	Kyocera Mita KM-F650	UPN6502366	19954	None	Poor
Fax Machine	Kyocera Mita KM-F650	IPN6502351	19955	None	Poor
Monitor	Dell 17" Flat Panel	CN-02Y315-71618-49E-AJXX	17051	00002937	Damaged
Monitor	Dell 19" Flat Panel	CN-0T6116-71618-4BC-AB8D	17080	00001983	Damaged
Monitor	Dell 19" Flat Panel	CN-0T6116-71618-4AT-AAC4	17087	00001553	Damaged
Monitor	Dell 17" Flat Panel	CN-02Y315-71618-49E-AJ14	17096	00001693	Damaged
Monitor	Dell 19" 1908FP Flat Panel	CN-0DY840-74261-7B6-3U8A	17255	00001019	Damaged
Monitor	Dell 19" Flat Panel	CN-0DY840-74261-7B6-3U4A	17260	00002728	Damaged
Monitor	Dell 17" Flat Panel	CN-0J6642-71618-56K-AFYZ	17459	00002358	Damaged
Monitor	Dell 24" S2409W Wide Panel	CN-OM500F-74261-96R-037U	17966	00001475	Damaged
Printer	Xerox Phaser 6300DN	WHH160341	16440	None	Damaged

HCHSP Inventory for 2017 Auction					
Description	**Model Type**	**Serial №**	**Tag**	**Barcode**	**Status**
Printer	Epson WF-2540	QKEY355248	None	None	Damaged
Projector	Infocus IN126	BJXB21900771	20106	00002703	Damaged
Scanner	HP5590 Scanjet	CN197VH04W	20086	None	Poor

Prepared By: Antonio Anzaldua, MIS Tech
Supervised By: Conrad Cabrera, MIS Director
Date: May 8, 2017

*Photo on File.

AI-59897 **Head Start** **16. I.**

CC - REGULAR

Meeting Date: 05/30/2017

Submitted For: Edmundo Garcia, HEAD START **Submitted By:** Linda Galaviz, HEAD START

Department: HEAD START

Information

CAPTION

Recognition of Accident Free Centers

BACKGROUND

Policy Council Approval: 05.17.17

Fiscal Impact

Attachments

Accident Free Centers
Accident Free Centers

Form Review

Inbox	Reviewed By	Date
Budget & Management	Veronica Ortiz	05/19/2017 11:31 AM
Linda Flores	Linda Flores	05/19/2017 03:34 PM
Final Approval	Monica Salinas	05/26/2017 02:58 PM
Form Started By: Linda Galaviz		Started On: 05/16/2017 09:52 AM
Final Approval Date: 05/26/2017		

Hidalgo County Head Start Program

P.O. Box 0117
Edinburg, Texas 78540-0117
Tel: (956) 383-0706 Fax: (956) 380-4176

TO: Ms. Teresa Flores, Executive Program Director

FROM: Noemi Flores, Risk Management Specialist

THROUGH: Mr. David Guel
Administrator for Human Resources

RE: Accident Free Centers

DATE: May 4, 2017

CC: Mrs. Nora Munoz, Assistant Program Director

Safety education and awareness play a critical part in the overall success of any safety program. We will continue to keep all of our staff fully informed through continuous trainings. Safety is a team effort which involves an active and conscientious participation by everyone. It is the goal of the Head Start Program to make sure that this is the concept adopted by all our staff.

I am very happy to inform you that the following fourteen (14) Head Start Centers are Accident Free for the 2016 – 2017 program year.

Alamo Head Start
La Estancia Head Start
McAllen VI Head Start
Monte Alto Head Start
Weslaco I Head Start
Hidalgo Head Start
Las Milpas I Headstart
Mission I Head Start
Palacios Head Start
Weslaco III Head Start
La Herencia Head Start
McAllen IV Head Start
Mission IV Head Start
San Carlos Head Start

Thank you for your continued support for the Risk Management Department.

Hidalgo County Head Start Program

P.O. Box 0117
Edinburg, Texas 78540-0117
Tel: (956) 383-0706 Fax: (956) 380-4176

TO: Ms. Teresa Flores, Executive Program Director

FROM: Noemi Flores, Risk Management Specialist

THROUGH: Mr. David Guel
Administrator for Human Resources

RE: Accident Free Centers

DATE: May 4, 2017

CC: Mrs. Nora Munoz, Assistant Program Director

Safety education and awareness play a critical part in the overall success of any safety program. We will continue to keep all of our staff fully informed through continuous trainings. Safety is a team effort which involves an active and conscientious participation by everyone. It is the goal of the Head Start Program to make sure that this is the concept adopted by all our staff.

I am very happy to inform you that the following fourteen (14) Head Start Centers are Accident Free for the 2016 – 2017 program year.

Alamo Head Start
La Estancia Head Start
McAllen VI Head Start
Monte Alto Head Start
Weslaco I Head Start
Hidalgo Head Start
Las Milpas I Headstart
Mission I Head Start
Palacios Head Start
Weslaco III Head Start
La Herencia Head Start
McAllen IV Head Start
Mission IV Head Start
San Carlos Head Start

Thank you for your continued support for the Risk Management Department.

AI-59887 **Head Start** **16. J.**

CC - REGULAR

Meeting Date: 05/30/2017

Submitted For: Edmundo Garcia, HEAD START **Submitted By:** Linda Galaviz, HEAD START

Department: HEAD START

Information

CAPTION

Discussion/Approval of Summer Work Schedule

BACKGROUND

Policy Council Approval: 05.17.17

Fiscal Impact

Attachments

Summer Work Schedule

Form Review

Inbox	Reviewed By	Date
Budget & Management	Veronica Ortiz	05/19/2017 11:10 AM
Final Approval	Monica Salinas	05/26/2017 02:58 PM

Form Started By: Linda Galaviz Started On: 05/16/2017 09:25 AM

Final Approval Date: 05/26/2017

Hidalgo County Head Start Program

Policy Council Regular Agenda

DATE: May 17, 2017

SUBJECT: Discussion/Approval of Summer Work Schedule

RATIONALE/NEED: The Administrative Office staff is recommending working the four (4) day week this summer. The day will begin at 7:00 a.m. and end at 6:00 p.m. including one (1) hour for lunch. The Administrative Office staff were presented with three (3) options to choose from and the above summer work schedule received the majority of the votes.

RECOMMENDATION: Administration recommends approval.

COST: N/A

RELATED INFORMATION INCLUDES: Voting Results and Summer Work Schedule

****

INITIATED BY: Teresa Flores, Executive Director

REVIEWED BY: Teresa Flores, Executive Director

EXECUTIVE DIRECTOR'S APPROVAL: Teresa Flores

Hidalgo County Head Start Program
Summer Work Schedule
2017 Results

Administration Departments	# of Employees	OPTION 1 *Monday – Thursday* *8:00 am – 6:00 pm* *Friday* *8:00 am – 12 Noon*	OPTION 2 *Monday – Thursday* *7:00 am – 6:00 pm* *Friday* *OFF*	OPTION 3 *Monday – Thursday* *7:00 am – 5:00 pm* *Friday* *7:00 am – 11:00 am*	TOTAL VOTES
Administration	7		5	2	7
Child Nutrition	5		5		5
Compliance	1		1		1
Community Partnerships/ Transition	2		2		2
Education/Mental Health/Staff Dev.	9		9		9
Family Services	5		5		5
Field Operations	17		16	1	17
Finance	5		5		5
Health Services	5	3	2		5
Human Resources	7		6 (1 No Preference)		7
M.I.S.	3		3		3
Procurement	3		3		3
Special Services	4		3	1	4
Warehouse	5		5		5
Totals	78	3	70	4	77 (1 No Preference)

SUMMER WORK SCHEDULE – 2017

OPTION 2

Monday – Thursday
7:00 a.m. – 6:00 p.m.
Friday – Off

JUNE 2017				
MON	TUES	WED	THU	FRI
			1 8:00-5:00	2 8:00-5:00
5 7:00-6:00	6 7:00-6:00	7 7:00-6:00	8 7:00-6:00	9 OFF
12 1ST Begins 7:00-6:00	13 7:00-6:00	14 7:00-6:00	15 7:00-6:00	16 OFF
19 7:00-6:00	20 7:00-6:00	21 7:00-6:00	22 7:00-6:00	23 OFF
26 2nd Begins OFFICE CLOSED	27 OFFICE CLOSED	28 OFFICE CLOSED	29 OFFICE CLOSED	30 OFFICE CLOSED

JULY 2017				
MON	TUES	WED	THU	FRI
3 OFFICE CLOSED	4 HOLIDAY OFFICE CLOSED	5 OFFICE CLOSED	6 OFFICE CLOSED	7 OFFICE CLOSED
10 OFFICE CLOSED	11 OFFICE CLOSED	12 OFFICE CLOSED	13 OFFICE CLOSED	14 OFFICE CLOSED
17 OFFICE CLOSED	18 1ST Returns 7:00-6:00	19 7:00-6:00	20 7:00-6:00	21 OFF
24 7:00-6:00	25 7:00-6:00	26 7:00-6:00	27 7:00-6:00	28 OFF
31 8:00-5:00	AUGUST 1, 2017 2nd Returns (All Staff Returns)			

Policy Council Approval: 00.00.17
Commissioners' Court Approval: 00.00.17

AI-59968 **WIC** **17. A.**

CC - REGULAR

Meeting Date: 05/30/2017

Submitted By: Margarita Gonzalez, WIC

Department: WIC

Information

CAPTION

WIC Program (1292):
Requesting approval to submit credit application to create sub account for WIC Department with Boggus Ford Lincoln in order to fix our 2009 Ford E-350 Diesel Cargo Van and authorize Valde Guerra, County Executive Officer to sign credit application.

BACKGROUND

This vendor is used by other County Departments. WIC Dept. is required to have all vendors registered under the Sam.Gov. Boggus Ford is the only vendor that can service this vehicle and is currently updating registration with Sam. Gov. Vendor is also requesting for the WIC Dept to setup an individual account for billing purposes.

Fiscal Impact

CALENDAR YEAR: 2017 **ACCT. #:** 7-1292-441-00-350-001-7-430

FUNDS AVAILABLE Y/N?: Y **MATCHING FUNDS Y/N?:**

BUDGETARY IMPACT:

Funds available as of 5-24-17. No fiscal impact at this time. If services are needed, then department will generate the corresponding requisition.

Attachments

Legal Approval
application

Form Review

Inbox	Reviewed By	Date
Budget & Management	Veronica Ortiz	05/24/2017 09:58 AM
Ivan Cantu	Ivan Cantu	05/24/2017 01:45 PM
Final Approval	Monica Salinas	05/26/2017 02:58 PM

Form Started By: Margarita Gonzalez Started On: 05/23/2017 03:52 PM

Final Approval Date: 05/26/2017

Zimbra **mague.gonzalez@wic.co.hidalgo.tx.us**

Re: Credit Application - Boggus Ford Lincoln

From : Josephine Ramirez <josephine.ramirez@da.co.hidalgo.tx.us> Wed, May 24, 2017 08:42 AM
Subject : Re: Credit Application - Boggus Ford Lincoln
To : Mague Gonzalez <mague.gonzalez@wic.co.hidalgo.tx.us>

That looks fine.

Josephine Ramirez Solis

Assistant Criminal District Attorney

Chief - Civil Division

Office of Criminal District Attorney

Hidalgo County, Texas

100 E. Cano

Edinburg, TX 78539

(956) 292-7609 ext. 8186

(956) 318-2079 FAX

josephine.ramirez@da.co.hidalgo.tx.us

****

The information contained in this e-mail may be 1.SUBJECT TO THE ATTORNEY-CLIENT PRIVILEGE; 2.ATTORNEY WORK PRODUCT; and/or 3.CONFIDENTIAL. It is intended only for the individual or entity designated above. Any distribution, copying, or use of or reliance upon the information contained in this e-mail by or to anyone other than the recipient designated above by the sender is unauthorized and strictly prohibited. **IF YOU HAVE RECEIVED THIS COMMUNICATION IN ERROR, PLEASE ADVISE THE SENDER BY REPLY E-MAIL TO josephine.ramirez@da.co.hidalgo.tx.us AND DELETE THE COMMUNICATION.**

****

On Tue, May 23, 2017 at 5:09 PM, Mague Gonzalez <mague.gonzalez@wic.co.hidalgo.tx.us> wrote:

> Josephine, we are trying to repair our WIC 2009 Ford E350 Cargo Van at Boggus Ford.
> They are requesting for us to create an account with them in order to service our vehicle

but they are requiring for us to fill a credit application. Please see attachment of the credit application they are requiring from us.

Margarita Gonzalez
Grants Accounting Supervisor
Hidalgo County WIC Program
3105 W. University
Edinburg, Texas 78539
(956)381-4646 ext. 4042
(956)381-0017
mague.gonzalez@wic.co.hidalgo.tx.us

It's Better at BOGGUS FORD LINCOLN McALLEN•HARLINGEN

CREDIT APPLICATION

Hidalgo County WIC Program		(956)381-4646	
BUSINESS NAME		**PHONE**	
3105 W. University	Edinburg	Texas	78539
ADDRESS	CITY	STATE	ZIP
3105 W. University	Edinburg	Texas	78539
BILLING ADDRESS (ONLY IF DIFFERENT)	CITY	STATE	ZIP

ORGANIZATION: Corporation [ ] Partnership [ ] Sole Owner [ ] Goverment Entity [x]

(Sole Owners & Partnerships give owner/partner's names & social security #)

EIN#	SS#

Date business started 1976 Do you require a Purchase Order? [X] Yes [ ] No

CREDIT REFERENCES

Name:	Address:	Phone:	Fax:	Vendor Acct#
1. Gateway Printing Office Supplies	315 S. Closner, Edinburg, Tx. 78539	(956)383-3861	(956)383-3476	1635
2. Staples Business Advantage	Dept. Dal P.O. Box 83689, Chicago, IL	877-753-4103	(956)541-3678	DAL 1031245
3. GULF COAST Paper Co.	635 Billy Mitchell Blvd. Brownsville,Tx.	(956)541-2281	(956)541-2018	761202

Have the Company or its Principal Owners filed Bankruptcy in the last 7 years? [ ] Yes [X] No

TAX EXEMPT I.D. # 746000717

I hereby apply for an open credit account to be settled at the office of BOGGUS MOTOR SALES, 1400 E. HWY 83, McAllen, Texas 78502, no later than the tenth of the month following purchase. Accounts with past due invoices greater than 30 days will be placed on **HOLD** for future purchases.

Signature: _____

Title: _____

DO NOT WRITE BELOW THIS LINE – FOR OFFICE USE ONLY

****

Approval [ ] Yes [ ] No Line of Credit Maximum $ _____

Date: _____ By: _____

Harlingen
2521 South Expressway 83
Harlingen, TX 78550
956-423-2580
1-866-423-2580

www.BoggusFord.com

McAllen
1400 East Hwy 83
McAllen, Texas 78501
956-686-7411
1-866-563-1788

AI-60038 **Precinct #2** **18. A.**

CC - REGULAR

Meeting Date: 05/30/2017

Submitted For: Eddie Cantu, COMM. PCT. #2 **Submitted By:** Erika Zamora, COMM. PCT. #2

Department: COMM. PCT. #2

Information

CAPTION

1. Requesting approval of an Interlocal Cooperation Agreement (ICA) between the County of Hidalgo, and the City of Pharr concerning the use of the Pct 2 Las Milpas Park Pool by the City of Pharr to provide swimming lessons to citizens.
2. In accordance with Section 791.014 of the Texas Government Code, requesting approval of the Interlocal Cooperation Agreement (ICA) project regarding the use of the Pct 2 Las Milpas Park by the City of Pharr to provide swimming lessons to citizens.

BACKGROUND

Interlocal Agreement will be attached upon receipt from Steve Crain.

Fiscal Impact

CALENDAR YEAR: **ACCT. #:**

FUNDS AVAILABLE Y/N?: **MATCHING FUNDS Y/N?:**

BUDGETARY IMPACT:

No fiscal impact.

Attachments

No file(s) attached.

Form Review

Inbox	Reviewed By	Date
Budget & Management	Veronica Ortiz	05/26/2017 02:03 PM
Final Approval	Monica Salinas	05/26/2017 02:58 PM
Form Started By: Erika Zamora		Started On: 05/26/2017 10:17 AM
Final Approval Date: 05/26/2017		

AI-60036 **Precinct #3** **19. A.**

CC - REGULAR

Meeting Date: 05/30/2017

Submitted By: Norma Ceballos, COMM. PCT. #3

Department: COMM. PCT. #3

Information

CAPTION

PCT 3 - Veterans Blvd SH495 (1200):
1. Approval of certification of revenues as certified by County Auditor for revenues received from the City of Palmview for the road improvement to Veterans Blvd. (SH 495).

2. Approval of 2017 appropriation of funds into Pct 3 Veterans Blvd. (SH 495) in the amount of $660.900.00.

BACKGROUND

Fiscal Impact

CALENDAR YEAR: 2017 **ACCT. #:** 7-1200-431-00-123-107-0-841

FUNDS AVAILABLE Y/N?: Y **MATCHING FUNDS Y/N?:**

BUDGETARY IMPACT:

Funds available pending certification of revenues from the Auditor's Office. Monies receipted under 7-1200-337-00-123-005-0-000.

Attachments

Receipt and Memo
Appropriation
COR

Form Review

Inbox	Reviewed By	Date
Budget & Management	Veronica Ortiz	05/26/2017 10:32 AM
Final Approval	Monica Salinas	05/26/2017 02:58 PM
Form Started By: Norma Ceballos		Started On: 05/26/2017 10:09 AM
Final Approval Date: 05/26/2017		

OFFICIAL HIDALGO COUNTY RECEIPT
OFFICE OF THE COUNTY TREASURER
NORMA G. GARCIA

Receipt No: 210881

Received From: CITY OF PALMVIEW PCT. 3 05/24/17 Date 05/25/17

1	1128	R&B PCT.#3 - UNEARNED REV-ICS VET BLVD	7-1200-223-00-123-084-0-000	660,900.00

Total: 660,900.00

Check Total	660,900.00
Cash Total	.00
Credit Total	.00
Other Total	.00

Joe M. Flores
County Commissioner Pct. No. 3

COUNTY COMMISSIONER PRECINCT 3
County of Hidalgo

Memorandum

To: Ray Eufracio, CPA, County Auditor

From: Joe M. Flores, Commissioner

Date: May 25, 2017

Subject: Certification of Revenues ICA City of Palmview for Veterans Blvd. Project.

Please let this memo serve as a request for Certification of Revenue in reference to the ICA with the City of Palmview for the Veterans Project.

Monies were received and receipted under account number 7-1200-223-00-123-084-0-000 in the amount of $660,900.00. (Receipt #210881).

Thank you and should you need additional information, please do not hesitate to call me for Norma Ceballos at ext. 3007.

Office: (956) 585-4509 • Fax: (956) 205-7009
724 N. Breyfogle • Mission, Texas 78574

DATE: May 25, 2017

DEPARTMENT HEAD: Commissioner Joe Flores - Pct. No. 3

DEPARTMENT NAME: Pct. 3 Veterans Blvd (SH 495)

ACCOUNT NUMBER: 7-1200-431-00-123-107-0-841

SUBJECT: Budget Amendments (Increases) in Accordance with Local Government Code, Chapter 111, Subchapter C

Honorable Commissioners' Court of Hidalgo County:

I would like to request the following amendments (increases) to my department budget in accordance with Local Government Code, Chapter 111, Subchapter C.

INCREASE OBJECT	ACCOUNT (OBJECT) NAME	AMOUNT
7 1200 431 00 123 107 0 841	PCT3 VETERANS BLVD (SH495)-AID	$ 660,900.00
7 1200 337 00 123 005 0 000	*R&B PCT3-ICA PALMVIEW VETERANS BLVD*	*$ 660,900.00*
	TOTAL BUDGET INCREASE -FUND 1100	$ 660,900.00

REASON: Appropriation of funds received from City of Palmview for Veterans Blvd Project

DEPARTMENT HEAD SIGNATURE

APPROVED COMMISSIONERS' COURT

/ /
DATE

ATTEST COUNTY CLERK

COUNTY of HIDALGO



EDINBURG, TEXAS 78539

HIDALGO COUNTY AUDITOR'S OFFICE
Hidalgo County Administration Building
2808 South Business Highway 281
Edinburg, Texas 78539-6243
PHONE: (956) 318-2511
FAX: (956) 318-2577
WEBSITE: www.co.hidalgo.tx.us/auditor

May 26, 2017

The Honorable Ramon Garcia, Hidalgo County Judge
The Honorable David Fuentes, Commissioner, Precinct No. 1
The Honorable Eduardo "Eddie" Cantu, Commissioner, Precinct No. 2
The Honorable Jose M. Flores, Commissioner, Precinct No. 3
The Honorable Joseph Palacios, Commissioner, Precinct No. 4

RE: Certification of Revenue

Dear Judge and Commissioners:

Pursuant to Local Government Code § 111.0707 SPECIAL BUDGET FOR REVENUE FROM INTERGOVERNMENTAL CONTRACTS:

> The county auditor shall certify to the commissioners court the receipt of all revenue from intergovernmental contracts that is available for disbursement in a fiscal year but not included in the budget for that fiscal year. On certification, the court may adopt a special budget for the limited purpose of spending the revenue from intergovernmental contracts for its intended purpose.

I, Ray Eufracio, County Auditor of Hidalgo County, certify to the Hidalgo County Commissioners Court the revenue from the intergovernmental contract between Hidalgo County and the City of Palmview, Texas for the road improvement project to Veterans Boulevard (SH495) from Abram Road East to La Homa Road in the amount of $660,900.00. These funds may now be made available by creating a new special budget or amending a current budget for its intended purposes.

CERTIFIED BY:

Raymundo Eufracio, CPA
Hidalgo County Auditor

5/30/17
Date

HIDALGO COUNTY DISTRICT JUDGES

LUIS M. SINGLETERRY JUDGE, 92ND D.C. | RODOLFO DELGADO JUDGE, 93RD D.C. | J. R. "BOBBY" FLORES JUDGE, 139TH D.C. | ROSE GUERRA REYNA JUDGE, 206TH D.C. | JUAN R. PARTIDA JUDGE, 275TH D.C. | MARIO E. RAMIREZ, JR. JUDGE, 332ND D.C. | NOE GONZALEZ JUDGE, 370TH D.C. OVERSEER | LETICIA LOPEZ JUDGE, 389TH D.C. | L. KEMO VASQUEZ JUDGE, 398TH D.C. | ISRAEL RAMON, JR. JUDGE, 430TH D.C. | RENEE R. BETANCOURT JUDGE, 449TH D.C.

COUNTY COMMISSIONER PRECINCT 3
County of Hidalgo

Joe M. Flores
County Commissioner Pct. No. 3

Memorandum

To: Ray Eufracio, CPA, County Auditor

From: Joe M. Flores, Commissioner

Date: May 25, 2017

Subject: Certification of Revenues ICA City of Palmview for Veterans Blvd. Project.

Please let this memo serve as a request for Certification of Revenue in reference to the ICA with the City of Palmview for the Veterans Project.

Monies were received and receipted under account number 7-1200-223-00-123-084-0-000 in the amount of $660,900.00. (Receipt #210881).

Thank you and should you need additional information, please do not hesitate to call me for Norma Ceballos at ext. 3007.

Office: (956) 585-4509 • Fax: (956) 205-7009
724 N. Breyfogle • Mission, Texas 78574

Nereyda Gonzalez

From: Linda Fong [Linda.Fong@auditor.co.hidalgo.tx.us]
Sent: Friday, May 26, 2017 10:54 AM
To: Nereyda Gonzalez
Cc: Marcela Luna
Subject: FW: Request for Certification of Revenue
Attachments: Request for Certification of Revenue - Veterans Blvd..pdf

---

From: Rolando Garcia [mailto:rolando.garcia@co.hidalgo.tx.us]
Sent: Friday, May 26, 2017 10:22 AM
To: linda fong <linda.fong@auditor.co.hidalgo.tx.us>
Cc: Sergio Cruz <sergio.cruz@co.hidalgo.tx.us>
Subject: Fwd: Request for Certification of Revenue

GM Linda,

Just forwarding you this item from Norma Ceballos. I believe she will be placing this item form May 30th.

Rolando Garcia Jr.
Planning Analyst II
Department of Budget and Management
2818 S. Business Hwy. 281
Edinburg, Tx. 78541
(956) 292-7025 Phone Ext.5412
(956) 292-7035 Fax

From: "Norma Ceballos" <norma.ceballos@co.hidalgo.tx.us>
To: "Sergio Cruz" <sergio.cruz@co.hidalgo.tx.us>
Cc: "Rolando Garcia" <rolando.garcia@co.hidalgo.tx.us>
Sent: Thursday, May 25, 2017 1:14:37 PM
Subject: Request for Certification of Revenue

Sergio,

Please review the attached, if you approve would you please forward to the auditor's office.

Thank you.

AI-60036 **Precinct #3 21. A.**

CC - REGULAR

Meeting Date: 05/30/2017

Submitted By: Norma Ceballos, COMM. PCT. #3

Department: COMM. PCT. #3

Information

CAPTION

1. Approval of certification of revenues as certified by County Auditor for revenues received from the City of Palmview for the road improvement to Veterans Blvd. (SH 495).

2. Approval of 2017 appropriation of funds into Pct 3 Veterans Blvd. (SH 495) in the amount of $660.900.00.

BACKGROUND

Fiscal Impact

Attachments

BA

Receipt and Memo

Form Review

Inbox	Reviewed By	Date
Budget & Management	Veronica Ortiz	05/26/2017 10:32 AM
Final Approval		
Form Started By: Norma Ceballos		Started On: 05/26/2017 10:09 AM

DATE: May 25, 2017

DEPARTMENT HEAD: Commissioner Joe Flores - Pct. No. 3

DEPARTMENT NAME: Pct. 3 Veterans Blvd (SH 495)

ACCOUNT NUMBER: 7-1200-431-00-123-107-0-841

SUBJECT: Budget Amendments (Increases) in Accordance with Local Government Code, Chapter 111, Subchapter C

Honorable Commissioners' Court of Hidalgo County:

I would like to request the following amendments (increases) to my department budget in accordance with Local Government Code, Chapter 111, Subchapter C.

INCREASE OBJECT	ACCOUNT (OBJECT) NAME	AMOUNT
~~7 1200 223 00 123 084 0 0~~	~~R&B Pct #3 Veterans Blvd~~	~~-$660,900.00~~
7 1200 431 00 123 107 0 841	Pct #3 Veterans Blvd (SH 495) Aid to Other Govt	660,900.00
7-1200-337-00-123-005-0-000		660,900.00
	TOTAL BUDGET INCREASE -FUND 1100	0.00

REASON: Appropriation of funds received from City of Palmview for Veterans Blvd Project

DEPARTMENT HEAD SIGNATURE

APPROVED COMMISSIONERS' COURT

/ /
DATE

ATTEST COUNTY CLERK

OFFICIAL HIDALGO COUNTY RECEIPT
OFFICE OF THE COUNTY TREASURER
NORMA G. GARCIA

Receipt No: 210881

Received From: CITY OF PALMVIEW PCT. 3 05/24/17 Date 05/25/17

1	1128	R&B PCT.#3 - UNEARNED REV-ICS VET BLVD	7-1200-223-00-123-084-0-000	660,900.00

Total: **660,900.00**

Check Total	660,900.00
Cash Total	.00
Credit Total	.00
Other Total	.00

VOID VOID VOID

CITY OF PALMVIEW
PALMVIEW MUNICIPAL DEVELOPMENT DISTRICT
400 W. VETERANS BLVD.
PALMVIEW, TX 78572
PH: 956-432-0300

Lone Star National Bank
www.lonestarnationalbank.com
88-1168-1149

1128

5/18/2017

PAY TO THE ORDER OF COUNTY OF HIDALGO

$ **660,900.00

Six Hundred Sixty Thousand Nine Hundred and 00/100********** DOLLARS

COUNTY OF HIDALGO

CITY OF PALMVIEW

AUTHORIZED SIGNATURE

Security features. Details on back.

MEMO Phase II 495 Expansion Project

⑈001128⑈ ⑆114911687⑆ 20250146866⑈

CITY OF PALMVIEW

COUNTY OF HIDALGO 5/18/2017 1128

660,900.00

Palmview MDD #4686 Phase II 495 Expansion Project	660,900.00

b. San Martin No. 2 Subdivision- Pct. 1 (Tillmin Welch, President) (Canton Road & Val Verde Road) – **APPROVED**
No. of Lots: 38 Single Family
Flood Zone: C (Shaded)
Drainage: Yes, Storm Drainage Pipe System & Drainage Ditch widening.
ETJ: Yes, approved by the City of Donna
Water: Yes, provided by North Alamo Water Supply
Sewer: Yes, OSSF
Paved: Yes, Canton Road and 3 internal streets.

19. Precinct #2 - Comm. Cantu:

A. **AI-57768** Resolution recognizing the Winners of the San Juan Community Lion's Club Pageant – **NO ACTION**

20. Precinct #3 - Comm. Flores:

A. **AI-57693** 1. Requesting approval to rescind action taken by Commissioner's Court on December 6, 2016 AI-57592, regarding Interlocal Cooperation Agreement between County of Hidalgo and City of Palmview. – **APPROVED. PER STEVE CRAIN: ICA CHANGED TO LUMP SUM CONTRIBUTION**

2. Requesting approval of Interlocal Cooperation Agreement between the County of Hidalgo and City of Palmview, Texas concerning certain improvements to Veteran's Boulevard (SH 495). – **APPROVED**

3. In accordance with Section 791.014, of the Texas Government Code, requesting approval of a proposed project regarding certain Phase II road improvements to Veterans Boulevard (SH 495) from Abram Road East to La Homa Road, a section which is within the City limits of City through an Interlocal Cooperation Agreement to be entered into with the City of Palmview, Texas and Hidalgo County. – **APPROVED**

21. Precinct #4 - Comm. Palacios:

A. **AI-57776** 1. Requesting approval to rescind action taken by Commissioners Court on 10-13-16 AI #56846 regarding approval of First Amendment to ICA with ECISD – **APPROVED**
2. Approval of First Amendment to Interlocal Cooperation Agreement (ICA) between Hidalgo County and the Edinburg Consolidated Independent School District (ECISD) (Brewster Park) – **APPROVED**

22. Budget & Management:

A. **AI-57765** Discussion, consideration and approval of the following Aetna Life Insurance Company forms, agreements and applications, with authority for County Judge to sign all required documents.
1. Escheatment Customer Election – **APPROVED**
2. NYHCRA Forms – **APPROVED**
3. Claim Fiduciary Agreement – **APPROVED**
4. Stop Loss Application – **APPROVED**
5. Plan Sponsor Letter of Agreement – **APPROVED**

B. **AI-57757** Discussion, consideration and authorization for the Treasurer's Office to issue wire transfer payments to Aetna to cover medical claims in the absence of weekly Commissioner's Court meetings. Wire transfer and related paperwork to be brought to Commissioner's Court for ratification on the next available Commissioner's Court meeting. – **APPROVED**

Revised

FILED
AT 3:00 O'CLOCK P.M.

JAN 10 2017

ARTURO GUAJARDO, JR., COUNTY CLERK
HIDALGO COUNTY, TEXAS
BY: _____ DEPUTY

STATE OF TEXAS §
COUNTY OF HIDALGO §

INTERLOCAL COOPERATION AGREEMENT BETWEEN THE COUNTY OF HIDALGO AND CITY OF PALMVIEW, TEXAS CONCERNING CERTAIN IMPROVEMENTS TO VETERANS BOULEVARD (SH 495) FROM ABRAM ROAD EAST TO LA HOMA ROAD

THIS agreement is made on this the 13th day of Dec., 2016 by and between the CITY OF PALMVIEW,TEXAS, hereinafter referred to as the "City" and the COUNTY OF HIDALGO, Texas hereinafter referred to as "County", pursuant to the provisions of the Texas Interlocal Cooperation Act, as follows:

WITNESSETH:

WHEREAS, the City is a home rule municipality located in Hidalgo County, Texas;

WHEREAS, the County is a county in the State of Texas;

WHEREAS, County and City entered into an Interlocal Cooperation Agreement dated March 17, 2015 in which the County and City agreed to complete Phase I of improvements to Veterans Boulevard;

WHEREAS, the City and County desire to cooperate in making needed Phase II transportation improvements (as hereinafter defined) to Veterans Boulevard (SH 495) from Abram Road East to La Homa Road as outlined in Exhibit A (the "Road"); and

WHEREAS, the City and County agree it is essential to develop this very important corridor, which is in much need of improvements, specifically in need of adding capacity for increased safety; and

WHEREAS, the County will be the fiduciary agent for this project and assume the role of project development lead;

WHEREAS, the County and the City desires to proceed with the development of the right of way maps, survey and the plans, specifications and estimates ("PS&E") ("Phase II");

WHEREAS, the City and County will cooperatively seek to fund the construction and ROW costs of this project through the Hidalgo County Metropolitan Planning Organization (HCMPO) and TxDOT;

WHEREAS, the total Phase II project development cost is estimated to be $1,321,800.00 of which the County will contribute an estimated amount of $660,900.00;

WHEREAS, the City desires to cooperate by contributing a lump sum not to exceed the amount of $660,900.00 to the County toward the Phase II activities;

WHEREAS, the County and City are authorized to enter into this Agreement pursuant to the Interlocal Cooperation Act, Texas Government Code 791.001 et. Seq. which authorizes local governments to contract with each other to perform governmental functions and services under the terms of the Act; and

WHEREAS, the City agrees County assumes the role of project sponsor to develop Phase II of the Road within the limits of the City.

NOW, THEREFORE, County and City, in consideration of the mutual covenants expressed hereinafter, agree to enter into this agreement as follows:

1. The County agrees to complete Phase II of the project development, more particularly described in Exhibit B attached hereto and made a part hereof for all purposes that relate to Phase II.

2. The road forms a connecting link or integral part of the County road system.

3. The City shall pay County as its contribution for Phase II of the Road a lump sum of $660,900.00 at time of execution of this Agreement.

4. City, pursuant to Tex. Trans. Code 251.012, authorizes County to perform the work and services described herein within its corporate city limits.

5. Each party agrees to conform to its own applicable purchasing laws, regulations, policies, and procedures with respect to the portion of the work under this Agreement performed by each party.

6. Conflict of Applicable Law: Nothing in this Agreement shall be construed so as to require the commission of any act contrary to law, and whenever there is any conflict between any provision of their Agreement and any present or future law, ordinance, or administrative, executive or judicial regulation, order or decree, or amendment thereof, contrary to which the parties have no legal right to contract, the latter shall prevail, but in such event the affected provision or provisions of the Agreement shall be modified only to the extent necessary to bring them within the legal requirements and only during the time such conflict exists.

7. No Waiver: No waiver by any party hereto of any breach of any provision of the Agreement shall be deemed to be a waiver of any preceding of succeeding breach of the same or any other provision hereof.

8. Entire Agreement: This Agreement contains the entire contract between the parties hereto and each party acknowledges that neither has made (either directly or through any agreement or representative) and representation or agreement in connection with this Agreement not specifically set forth herein. This Agreement may be modified or amended only by agreement in writing executed by the City and County, and not otherwise.

9. TEXAS LAW TO APPLY: THIS AGREEMENT SHALL BE CONSTRUED UNDER AND IN ACCORDANCE WITH THE LAWS OF THE STATE OF

TEXAS, AND ALL OBLIGATION OF THE PARTIES CREATED HEREUNDER ARE PERFORMABLE IN HIDALGO COUNTY, TEXAS. THE PARTIES HEREBY CONSENT TO PERSONAL JURISDICTION IN HIDALGO COUNTY, TEXAS.

10. Notice: Except as maybe otherwise specifically provided in this Agreement, all notices, demands, requests or communication required or permitted hereunder shall be in writing and shall either be (i) personally delivered against a written receipt, or (ii) sent by registered or certified mail, return receipt requested, postage prepaid and addressed to the parties at the addresses set forth below, or at such other addresses as may have been theretofore specified by written notice delivered in accordance herewith:

If to City:	City of Palmview Attention: Gerardo Perez, Mayor 400 W. Veterans Blvd. Mission, Texas 78572
If to County:	Hidalgo County, Texas Attention: Ramon Garcia, Hidalgo County Judge 302 W. University Drive Edinburg, Texas 78539
With copy to:	Joe Flores, Commissioner, Precinct No. 3 724 N. Breyfogle Mission, Texas 78572

11. Each notice, demand, request or communication which shall be delivered or mailed in the manner described above shall be deemed sufficiently given for all purposes at such time as it is personally delivered to the addressee, or, if mailed, at such time as it is deposited in the United States mail.

12. Additional Documents: The parties hereto covenant and agree that they will execute such other and further instruments and documents as are or may become necessary or convenient to effectuate and carry out the terms of this agreement.

13. Successors. This Agreement shall be binding upon and inure to the benefit of the parties hereto and their respective heirs, executors, administrators, legal representatives, successors, and assigns where permitted by this Agreement.

14. Assignment: This Agreement shall not be assignable.

15. Headings. The headings and captions contained in this Agreement are solely for the convenience reference and shall not be deemed to affect the meaning or interpretation of any provision of paragraph hereof.

16. Gender and Number. All pronouns used in this Agreement shall include the other gender, whether used in the masculine, feminine or neuter gender, and singular shall include the plural whenever and as often as may be appropriate.

17. Authority to Execute. The execution and performance of this Agreement by the City and County have been duly authorized by all necessary laws, resolutions or corporate action, and this Agreement constitutes the valid and enforceable obligations of the City and County in accordance with its terms.

18. Governmental Purpose. Each party hereto is entering into the agreement for the purpose of providing for governmental services or functions and will pay for such services out of current revenues available to the paying party as herein provided.

19. Commitment or Current Revenues Only. In the event that during any term hereof; the governing body of any party does not appropriate sufficient funds to meet the obligations of such party under this Agreement, then any party may terminate this Agreement upon ninety (90) days written notice to the other party. Each of the parties hereto agrees, however, to use its best efforts to secure funds necessary for the continued performance of this Agreement. The parties intend this provision to be a continuing right to terminate this Agreement at the expiration of each budget period of each party hereto pursuant to the provisions of Tex. Loc. Govt. Code Ann. §271.903

WITNESS THE HANDS OF THE PARTIES effective as of the day and year first written above.

CITY OF PALMVIEW

By: _____, Mayor

ATTEST:

_____
City Secretary

COUNTY OF HIDALGO

By: Ramon Garcia
Ramon Garcia, County Judge

APPROVED BY
COMMISSIONERS' COURT
ON: 12/13/16

ATTEST:

Arturo Guajardo, Jr., County Clerk

COMMISSIONERS COURT
HIDALGO COUNTY, TEXAS

APPROVED AS TO FORM:

ATLAS, HALL & RODRIGUEZ, LLP

By: _____
Stephen L. Crain

STATE OF TEXAS §
§
COUNTY OF HIDALGO §

FILED
AT 3:00 O'CLOCK P.M.

JAN 10 2017

ARTURO GUAJARDO, JR., COUNTY CLERK
HIDALGO COUNTY, TEXAS

APPROVAL OF
INTERLOCAL COOPERATION AGREEMENT
PROJECT

In accordance with Texas Government Code §791.014, Hidalgo County, Texas, acting by and through the Hidalgo County Commissioners Court, has been advised of a proposed project regarding certain Phase II road improvements to Veterans Boulevard (SH 495) from Abram Road East to La Homa Road, a section which is within the City limits of City through an Interlocal Cooperation Agreement to be entered into with the City of Palmview, Texas, and Hidalgo County.

By vote on Dec. 13, 2016, the Hidalgo County Commissioners Court has approved the Project identified above.

Ramon Garcia
By: Ramon Garcia, County Judge

ATTEST:

Arturo Guajardo, Jr., County Clerk

COMMISSIONERS COURT
HIDALGO COUNTY, TEXAS

APPROVED BY
COMMISSIONERS' COURT
ON: 12/13/16

APPROVED AS TO FORM:

ATLAS, HALL & RODRIGUEZ, LLP

By: _____
Stephen L. Crain

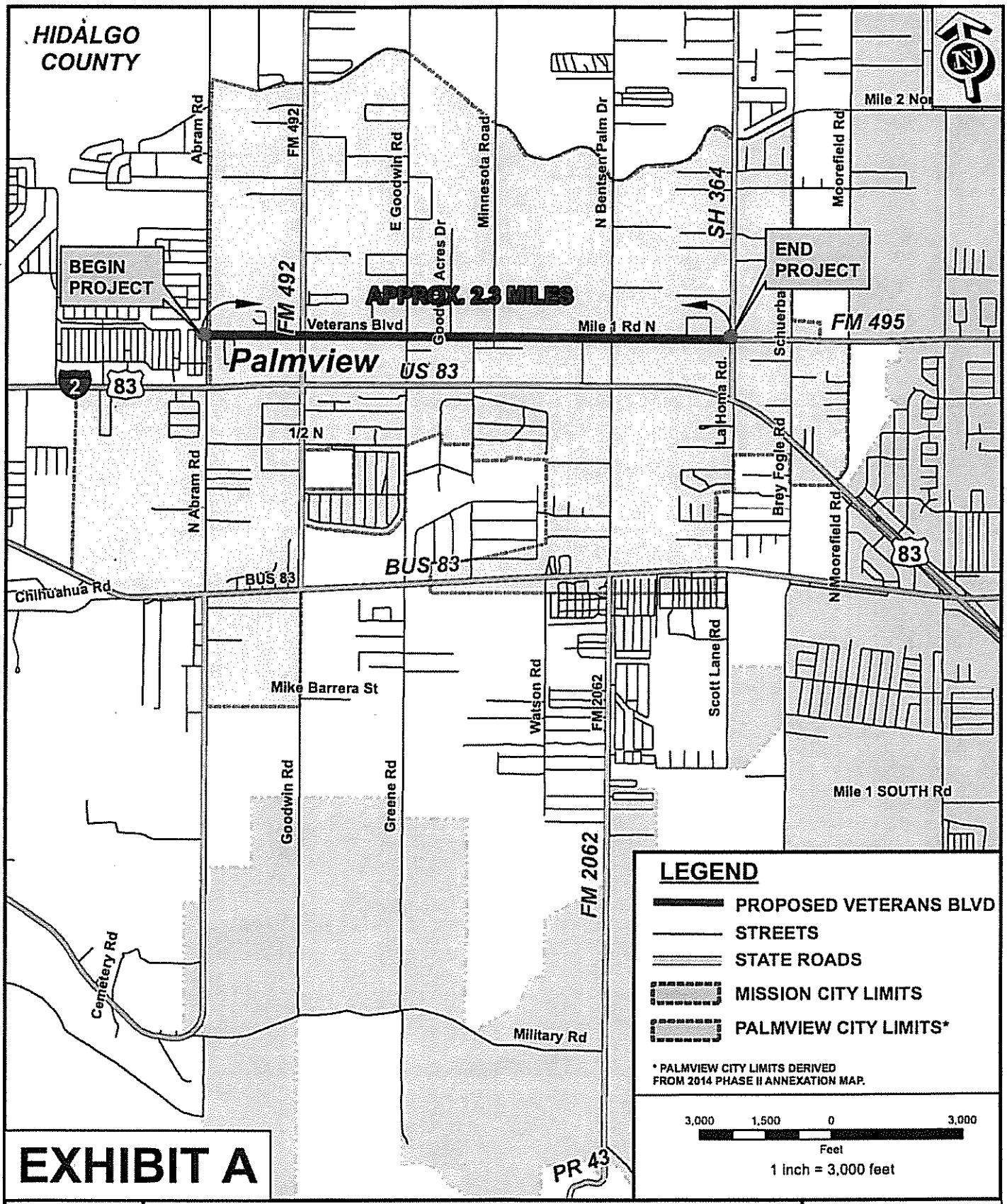

EXHIBIT A

VETERANS BLVD (SH 495) LOCATION MAP

FROM ABRAM RD TO LA HOMA (SH 364) APPROX. 2.3 MILES

THE COUNTY OF HIDALGO TEXAS

CITY OF PALMVIEW TEXAS

Document Path: G:\GIS APROJECTS\HIDALGO\VETERANS ROAD (MILE 1) FROM LA HOMA TO ABRAM - BUS 83\2016\VETERANS ROAD LOCATION MAP EXHIBIT A.mxd

EXHIBIT "B"

VETERANS BOULEVARD PROJECT (SH 495 EXTENSION)

ESTIMATED PROJECT COSTS

ROADWAY PROJECT:	VETERANS BOULEVARD (SH 495 Extension)
LIMITS:	from Abram Road to La Homa Road
EXISTING ROADWAY SECTION:	40-ft Rural
EXISTING ROW WIDTH:	70' to 85' Varies
PROPOSED ROADWAY SECTION:	4-lane divided urban w/o Shoulders
PROPOSED ROW WIDTH:	80-FT
ESTIMATED CONSTRUCTION COST ...(ROADWAY ONLY).....	$10,350,000.00
LENGTH FOR 4-LANE ROADWAY ...(SECTION II)	2.3 Miles

ESTIMATED PROJECT COSTS	*ESTIMATED % LOCAL COST*	*TOTAL ESTIMATED PROJECT COST*	*ESTIMATED LOCAL COST*
PHASE I INFORMATION FOR ORIGINAL INTERLOCAL COOPERATION AGREEMENT			
WORK AUTHORIZATION NO. 1			
PHASE I - EA, PUBLIC INVOLVEMENT & SCHEMATIC DESIGN			
Environmental Document with TxDOT (18 months)	100%	$ 149,850.00	$ 149,850.00
Public Involvement for the project with stakeholders and 1 Public Meeting (3 Months)	100%	$ 41,625.00	$ 41,625.00
Archeological and Historical Research	100%	$ 65,000.00	$ 65,000.00
Engineering Technical Support at Public Mtgs with Layouts etc	100%	$ 31,500.00	$ 31,500.00
Schematic for Roadway	100%	$ 149,040.00	$ 149,040.00
Hydrological Map for Outfall Drain Ditch	100%	$ 66,000.00	$ 66,000.00
Schematics for Outfall Ditches	100%	$ 99,000.00	$ 99,000.00
Schematic Design fo r Siphon with Steel Pipe Bypass for Irrig Dist	100%	$ 33,000.00	$ 33,000.00
Estimated Environmental Document Review Charges by TxDOT	100%	$ 80,000.00	$ 80,000.00
Office Surveys for Schematic (Prel. Ownership Identification and Property Rights)	100%	$ 42,000.00	$ 42,000.00
Preliminary Compensable Utilities Identification on Schematic	100%	$ 54,000.00	$ 54,000.00
Update Schematic based on comments as provide by TxDOT/FHWA	100%	$ 46,000.00	$ 46,000.00
Engineering Technical Support at Public Hearing with Layouts etc	100%	$ 22,500.00	$ 22,500.00
Public Involvement for 1 Public Hearing	100%	$ 41,625.00	$ 41,625.00
SUB-TOTAL		$ 923,140.00	$ 923,140.00
PHASE II AMENDMENT NO. 1 TO INTERLOCAL COOPERATION AGREEMENT			
WORK AUTHORIZATION NO. 2 - PRELIMINARY ESTIMATE			
PHASE II - Surveys & ROW Map			
Field Surveys for Design and Construction	100%	$ 110,400.00	$ 110,400.00
Complete ROW Map (Estimated 75 Parcels)	100%	$ 292,500.00	$ 292,500.00
PS&E Development Roadway (7% Engineering Fee)	100%	$ 724,500.00	$ 724,500.00
Subsurface Utility Engineering (SUE) (Estimated 20 non destructive holes per mile)	100%	$ 27,600.00	$ 27,600.00
Engineering Fee to Create 1 set of Plans and Submit through TxDOT	100%	$ 66,000.00	$ 66,000.00
Permitted Utilities Coordination to adjust	100%	$ 100,800.00	$ 100,800.00
ROADWAY CONSTRUCTION COST (100% STATE/FED)	0%	$ 10,350,000.00	$ -
TxDOT Construction Inspection (11%) (100% STATE/FED)	0%	$ 1,138,500.00	$ -
SUB-TOTAL		$ 12,810,300.00	$ 1,321,800.00
PHASE III FOR INFORMATION PURPOSES ONLY			
WORK AUTHORIZATION NO. 3 - PRELIMINARY ESTIMATE			
PHASE III - ROW Acquisition, Comp. Utility Mngmt			
Preliminary Engineering Direct State Costs for State Review & Oversight (Est. 1.2% of Construction)	100%	$ 124,200.00	$ 124,200.00
Right-of-Way Costs - Acq Services @ (est. 75 Parcels @ $13,800/Parcel Avg.)	100%	$ 1,035,000.00	$ 1,035,000.00
Estimated County Attorney Costs for Condemnation ($15,000/Parcel based on 20% total of parcels)	100%	$ 225,000.00	$ 225,000.00
Right-of-Way State Division Review and Oversight	100%	$ 15,787.20	$ 15,787.20
Right-of-Way Costs - High Pressure Gasline Adjustment (80/20)	20%	$ 250,000.00	$ 50,000.00
Right-of-Way Acquisition for the Outfall	100%	BY HCDD#1	BY HCDD#1
Estimated Compensable Utility Mgmt for Acq. of Property Rights and Compensate for Utility Adjust(s)	100%	$ 162,000.00	$ 162,000.00
Estimated Roadway Right-of-Way Costs (ESTIMATED 2.6 Ac. @ 56.5/ sq ft) (80/20)	20%	$ 789,360.00	$ 157,872.00
COMPENSABLE UTILITY (Water, Sewer, Telephone, Electricity, etc.) (80/20)	20%	$ 260,000.00	$ 52,000.00
Eng Consultant Construction Management (18 Months)	100%	$ 189,000.00	$ 189,000.00
SUB-TOTAL		$ 3,050,347.20	$ 2,010,859.20
ESTIMATED TOTAL		$ 16,783,787.20	$ 4,255,799.20

TOTAL ESTIMATED COUNTY COST: $ 4,255,799.20 25%

COMBINED TOTAL ESTIMATED PROJECT COST: $ 16,783,787.20

ESTIMATED LPA (LOCAL PUBLIC AGENCY) COSTS NOT INCLUDED IN WORK AUTH.: $ 654,850.20

8/3/2016

AI-59923 **Precinct #4** **20. A.**

CC - REGULAR

Meeting Date: 05/30/2017

Submitted By: Nick Perez, COMM. PCT. #4

Department: COMM. PCT. #4

Information

CAPTION

1. Discussion consideration and approval for Hidalgo County Pct. 4 to appoint Carlos Cruz Leal student at the University of Texas Rio Grande Valley and Daniel Diaz student at the University of Texas at Austin, as interns under Hidalgo County Precinct 4 for the period of June 5, 2017 to August 11, 2017.

2. Authorization for Hidalgo County Judge to sign Affiliation/Training Letter for internship.

BACKGROUND

Fiscal Impact

Attachments

Internship Agreement Carlos A. Cruz
Unpaid Agreement UTRGV
Affiliation-Training Letter UTRGV
Internship Agreement Daniel Diaz

Form Review

Inbox	Reviewed By	Date
Budget & Management	Veronica Ortiz	05/24/2017 09:49 AM
Final Approval	Monica Salinas	05/26/2017 02:58 PM
Form Started By: Nick Perez		Started On: 05/19/2017 11:30 AM
Final Approval Date: 05/26/2017		

INTERNSHIP AGREEMENT AND WAIVER OF LIABILITY

I, Carlos A. Cruz Leal, agree to participate in an internship with The County of Hidalgo, Texas , as outlined in this agreement. I hereby certify that I am at least 18 years of age at this time, and I am a student at UTRGV.

I hereby agree to comply with all relevant policies, procedures and requirements as outlined in the Hidalgo County Internship Policy and the Personnel Policy Manual I understand that I will not receive compensation for my services provided during the internship period, and that no other benefits will be provided. I understand that my placement and this internship is at-will and that I may be terminated at any time at the discretion of the County.

I hereby voluntarily release, discharge, waive and relinquish any and all action or causes of action for personal injury, property damage, or wrongful death occurring to me as a result of my internship with Hidalgo County. I hereby release, waive, discharge and relinquish any actions or causes of actions aforementioned, which may hereafter arise for me and my estate, and agree that under no circumstances will I prosecute or present any claim for personal injury, property damage or wrongful death against Hidalgo County or any of its agents and employees for any said cause of action, whether the same shall arise by negligence of any said persons, or otherwise. It is my intent by this instrument to exempt and release, indemnify and hold harmless Hidalgo County and any of its employees, its elected or appointed officials, employees and agents for any personal injury, property damage, or wrongful death cause by negligence.

I ACKNOWLEDGE THAT I HAVE READ THE FOREGOING PARAGRAPHS AND HAVE BEEN FULLY AND COMPLETELY ADVISED OF THE POTENTIAL DANGERS INCIDENTAL TO PARTICIPATING IN AN INTERNSHIP AND AM FULLY AWARE OF THE LEGAL CONSEQUENCES OF SIGNING THIS INSTRUMENT.

C. Cruz

Signature

5/18/17

Date

Unpaid Internship Agreement

The internship program is a progressive educational program that integrates a student's academic studies with work experience. This is an agreement between Carlos Cruz Leal ("Intern") and **Hidalgo County Precinct 4** ("Company"). The purpose of this educational internship is for the intern to learn about Company's business and to gain valuable insight and experience.
The term of this internship begins on 6/5/17 and ends 8/11/17.

Conditions of the Agreement:

- The internship is related to an educational purpose and there is no guarantee or expectation that the activity will result in an employment relationship with the Company.
- The educational experience received by the Intern from the internship is for the benefit of the Intern.
- The Intern does not replace or displace any employee of the Company.
- The Intern will receive direct supervision by an appropriate supervisor.
- The Company does not derive an immediate advantage from the activities performed by the Intern.
- The Intern is not entitled to any wages or any compensation or benefits for the time spent in the internship.

The Company specifically agrees to and acknowledges the following:

- The Company holds the university and its representatives harmless to any conditions taken place at internship site.
- The Company understands that the Intern will work the necessary amount of hours required (Note: Work hours should not exceed 15 hours per week unless fulfillment is needed for academic credit hours.)
- The Company will designate an appropriate individual to supervise the Intern and serve as a liaison between The University of Texas Rio Grande Valley and the employer.
- Establish clear learning objectives at the beginning of each semester.
- Provide a safe work environment and related training if needed.
- Adhere to all applicable employment laws and regulations, including the FLSA (Fact Sheet #71) regarding unpaid internships.
- Review company policies and procedures with student.
- Evaluate the Intern's performance and provide feedback to The University of Texas Rio Grande Valley or academic advisor/faculty coordinator.

The Intern specifically agrees to and acknowledges the following:

- This internship is educational in nature and there is no guarantee or expectation that the internship will result in employment with Company.
- Company may at any time in sole discretion, terminate the internship without notice or cause.
- Intern will commit to agreed upon beginning and end dates during their internship and will maintain a regular internship schedule determined by the Intern and their supervisor.
- Intern will demonstrate honesty, punctuality, courtesy, cooperation, proper health and grooming, appropriate dress and a willingness to learn.
- Intern will abide by the regulations and policies of the Internship Program and sponsoring Company.
- Intern will immediately notify the university internship coordinator and/or faculty coordinator of work issues or changes in responsibilities not in line with learning objectives.
- Intern will provide supervisor with all necessary information pertaining to unpaid internship, including related assignments and reports.
- Under no circumstances will the Intern leave the internship without first consulting with Intern's supervisor.
- Intern is responsible for transportation to and from internship site.
- In conjunction with the Intern and/or faculty coordinator, establish well-defined learning objectives relative to course of study.
- If earning academic credit, the Intern may face consequences of failing to obtain academic credit if the Intern self-terminates internship or is discharged from the job prior to completion.
- While the Intern is on Company premises, he/she should act professionally in accordance to Company standards.
- Intern is not entitled to workers compensation.

- Intern assumes all of the risks of participating in the internship program. In consideration of the opportunity afforded to the Intern to participate in the internship program, the Intern hereby agrees the he/she, his/her assignees, guardians, and legal representatives, will not make a claim against Company or any of its affiliated organizations, or either of the officers or directors collectively or individually, or any of its employees, for the injury of death to Intern or damage to his/her property, however caused, arising from his/her participation in the internship program. Intern hereby waives and releases any rights, actions, or causes or action resulting from personal injury or death to him/her, or damage to his/her property, sustained in connection with his/her participation in the internship program.

I understand that this unpaid, learning experience is not considered employment and that Intern is not entitled to wages or a promise of employment at the completion of the unpaid learning experience.

C. Cruz — 5/18/17

Intern Signature — Date

Carlos Cruz Leal

(Print Name)

Nick Pérez — 5/18/17

Department/Company — Date

Nick Pérez

(Print Name)

John R. Kanfold — 5-18-17

Internship Coordinator Signature — Date

John R. Kanfold

(Print Name)

Affiliation/Training Letter

The internship program is a progressive educational program that integrates a student's academic studies with work experience. The internship program partnership between Hidalgo County Precinct 4, The University of Texas Rio Grande Valley Career Center and the student intern agree to the following:

A. **Hidalgo County Precinct 4** agrees to:

- Understand that The University of Texas Rio Grande Valley is not held liable for interns while on-site with Hidalgo County Precinct 4 and holds the university and its representatives harmless to any conditions taken place at internship site
- Understands that the intern will work the necessary amount of hours required, this may include hours required for academic credit
- Designate an individual to supervise the intern and serve as a liaison between The University of Texas Rio Grande Valley Career Center and the employer
- Establish clear learning objectives at the beginning of each semester
- Provide a safe work environment and related training if needed
- Adhere to all applicable employment laws and regulations, including the FLSA (Fact Sheet #71) regarding unpaid internships
- Review company policies and procedures with student
- Evaluate the intern's performance and provide feedback to The University of Texas Rio Grande Valley or academic advisor/faculty coordinator

B. **The University of Texas Rio Grande Valley Career Center** agrees to:

- Provide an internship coordinator to serve as a liaison between UTRGV Career Center and Hidalgo County Precinct 4
- Make follow-up contacts with the employer regarding intern's progress
- Award college credit in designated courses approved by supervising faculty

C. The **student intern** agrees to:

- Abide by the regulations and policies of the Internship Program and sponsoring employer
- Commits to one full semester of employment during their internship
- The understanding that this is an unpaid internship
- In conjunction with the intern and/or faculty coordinator, establish well-defined learning objectives relative to course of study
- Immediately notify the university internship coordinator and/or faculty coordinator of work issues or changes in responsibilities not in line with learning objectives
- If earning academic credit, intern drops all credits if leaves internship or is discharged from the job prior to completion

C. [signature]	5/22/17	[signature]	5-19-17
Student	Date	Department	Date
[signature]	5/19/17		
Employer/Supervisor	Date		

County of Hidalgo, Texas

_____ _____

Ramon Garcia, County Judge Date

INTERNSHIP AGREEMENT AND WAIVER OF LIABILITY

I, Daniel Diaz, agree to participate in an internship with The County of Hidalgo, Texas , as outlined in this agreement. I hereby certify that I am at least 18 years of age at this time, and I am a student at University of Texas at Austin.

I hereby agree to comply with all relevant policies, procedures and requirements as outlined in the Hidalgo County Internship Policy and the Personnel Policy Manual I understand that I will not receive compensation for my services provided during the internship period, and that no other benefits will be provided. I understand that my placement and this internship is at-will and that I may be terminated at any time at the discretion of the County.

I hereby voluntarily release, discharge, waive and relinquish any and all action or causes of action for personal injury, property damage, or wrongful death occurring to me as a result of my internship with Hidalgo County. I hereby release, waive, discharge and relinquish any actions or causes of actions aforementioned, which may hereafter arise for me and my estate, and agree that under no circumstances will I prosecute or present any claim for personal injury, property damage or wrongful death against Hidalgo County or any of its agents and employees for any said cause of action, whether the same shall arise by negligence of any said persons, or otherwise. It is my intent by this instrument to exempt and release, indemnify and hold harmless Hidalgo County and any of its employees, its elected or appointed officials, employees and agents for any personal injury, property damage, or wrongful death cause by negligence.

I ACKNOWLEDGE THAT I HAVE READ THE FOREGOING PARAGRAPHS AND HAVE BEEN FULLY AND COMPLETELY ADVISED OF THE POTENTIAL DANGERS INCIDENTAL TO PARTICIPATING IN AN INTERNSHIP AND AM FULLY AWARE OF THE LEGAL CONSEQUENCES OF SIGNING THIS INSTRUMENT.

Daniel Diaz

Signature

May 24, 2017

Date

AI-59972 **Precinct #4** **20. B.**

CC - REGULAR

Meeting Date: 05/30/2017

Submitted For: Joseph Palacios, COMM. PCT. #4

Submitted By: Veronica Lopez, COMM. PCT. #4

Department: COMM. PCT. #4

Information

CAPTION

Requesting approval of claim for the following, with authority for County Treasurer to issue payment after review and auditing procedures are completed by County Auditor.

Invoice Date	Invoice No.	Description	Amount
05/22/17	879363	Subscription from 03/12 through 05/10	$32.93

BACKGROUND

Fiscal Impact

CALENDAR YEAR: 2017 **ACCT. #:** 7-1200-431-00-124-007-0-640

FUNDS AVAILABLE Y/N?: Yes **MATCHING FUNDS Y/N?:**

BUDGETARY IMPACT:

Req # 341867
06/01/17 through 06/01/18

Attachments

AIM Invoice

Form Review

Inbox	Reviewed By	Date
Budget & Management	Veronica Ortiz	05/24/2017 01:06 PM
Final Approval	Monica Salinas	05/26/2017 02:58 PM
Form Started By: Veronica Lopez		Started On: 05/24/2017 09:07 AM
Final Approval Date: 05/26/2017		

INVOICE

AIM MEDIA TEXAS LLC

PO BOX 3288
MCALLEN TX 78502-3288
www.themonitor.com

1400 E NOLANA ST
MCALLEN TX 78504-6111

(956) 683-4000
(956) 683-4011 (Fax Finance Dept)

BILL TO:
Hidalgo County Precinct 4
1051 N Doolittle Rd
Edinburg TX 78542-0337

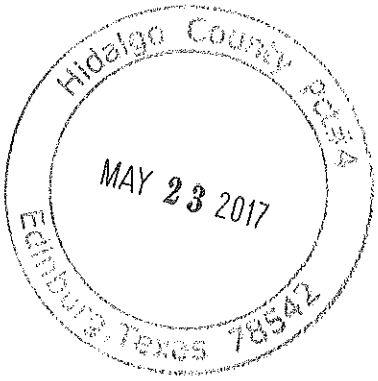

SHIPPED TO:
Same Address

ACCOUNT NUMBER	879363
INVOICE DATE	May 22, 2017

QUANTITY	DESCRIPTION	UNIT PRICE	AMOUNT
	Subscription from 3/12 through 5/10		32.93
		TOTAL	$32.93

Please include account number on all correspondence/payments.

$32.93
AMOUNT DUE

DIRECT ALL INQUIRIES TO:
Customer Service
AIM Media Texas LLC
(956) 683-4300
iservices@aimmediatx.com

MAKE ALL CHECKS PAYABLE TO:
The Monitor
Attn: Finance Dept (Circulation)
PO Box 3288
McAllen TX 78502-3288

THANK YOU FOR YOUR BUSINESS!

AI-60042 **Budget and Management** **21. A.**

CC - REGULAR

Meeting Date: 05/30/2017

Submitted For: Sergio Cruz, BUDGET & MANAGEMENT

Submitted By: Linda Flores, BUDGET & MANAGEMENT

Department: BUDGET & MANAGEMENT

Information

CAPTION

1. Presentation and discussion on Hidalgo County Capital Improvement Plan
2. Presentation, discussion and possible action on CIP Plan of Finance.

BACKGROUND

Fiscal Impact

Attachments

No file(s) attached.

Form Review

Inbox	Reviewed By	Date
Budget & Management	Veronica Ortiz	05/26/2017 11:53 AM
Final Approval	Monica Salinas	05/26/2017 02:58 PM
Form Started By: Linda Flores		Started On: 05/26/2017 10:32 AM
Final Approval Date: 05/26/2017		

AI-59918 **Budget and Management** **21. B.**

CC - REGULAR

Meeting Date: 05/30/2017

Submitted For: Sergio Cruz, BUDGET & MANAGEMENT

Submitted By: Sandra Jara, BUDGET & MANAGEMENT

Department: BUDGET & MANAGEMENT

Information

CAPTION

Requesting approval for payment of Invoice No.: Mission PL FY2017-2b to the City of Mission/Speer Memorial Library for the Hidalgo County Library System (eLibrary) payment in the amount of $400,000.00.

BACKGROUND

In accordance with the current Interlocal Agreement between Hidalgo County and the City of Mission, this invoice is for "library materials, supplies and services, electronic database services, audiovisual equipment, and computer hardware and software for library services for the free use of the City's library by residents of the rural areas of the County".

Fiscal Impact

CALENDAR YEAR: 2017 **ACCT. #:** 7-1100-455-00-125-024-0-841

FUNDS AVAILABLE Y/N?: Y **MATCHING FUNDS Y/N?:**

BUDGETARY IMPACT:

Funds available as of 05/24/17

Attachments

Invoice

Form Review

Inbox	Reviewed By	Date
Budget & Management	Veronica Ortiz	05/23/2017 04:26 PM
Final Approval	Monica Salinas	05/26/2017 02:58 PM
Form Started By: Sandra Jara		Started On: 05/18/2017 01:17 PM
Final Approval Date: 05/26/2017		

Invoice

Invoice No:	Make Check Payable to:	Date:
Mission PL FY2017-2b	**City of Mission**	5/15/17

From:

City of Mission / Speer Memorial Library

801 E 12th St
Mission, TX 78572

Order Reference No:
Interlocal Agreement

To:

Hidalgo County/Hidalgo County Library System

100 N. Closner
Edinburg, TX 78539

Quantity	Unit	Description	Unit Price	Extension
1	Each	In accordance with the current Interlocal Agreement between Hidalgo County and the City of Mission, this invoice is for "library materials, supplies and services, electronic database services, audiovisual equipment, and computer hardware and software for library services for the free use of the City's library by residents of rural areas of the County".	$400,000	$400,000

Total Due $400,000

This Invoice is presented for pre-payment or reimbursement for expenditures only for items covered under the current Interlocal agreement between **Hidalgo County** and the **City of Mission**

Attested by: Mari Rod _____ Date: 5/15/17

Signature of Library Director or Representative

For questions concerning this invoice call the MJVSPL Office at (956) 973-3144

AI-59803 **Budget and Management** **21. C.**

CC - REGULAR

Meeting Date: 05/30/2017

Submitted By: Rolando Garcia, BUDGET & MANAGEMENT

Department: BUDGET & MANAGEMENT

Information

CAPTION

Texas VINE Grant (1283):
Approval to submit the FY 2017 Texas VINE Grant reimbursement maintenance invoice in the amount of $6,928.83 (3rd Qtr.) and the Texas Statewide Automated Victim Notification Service (SAVNS) County Verification of Continuing Production Record with the authority for County Judge to sign the required documents.

BACKGROUND

Texas VINE Annual Maintenance Grant Contract for FY2017 was approved August 30, 2016 (AI#55929), OAG Contract No. 1770891

Fiscal Impact

CALENDAR YEAR: 2017 **ACCT. #:** 7-1283-415-00-200-005-7-336

FUNDS AVAILABLE Y/N?: YES **MATCHING FUNDS Y/N?:** NO

BUDGETARY IMPACT:

No Budgetary Impact
Revenue Acct# 7-1283-334-10-200-005-7-000 Texas VINE Program Revenue FY2017

Attachments

Invoice
SAVNS Report

Form Review

Inbox	Reviewed By	Date
Budget & Management	Veronica Ortiz	05/26/2017 02:03 PM
Final Approval	Monica Salinas	05/26/2017 02:58 PM
Form Started By: Rolando Garcia		Started On: 05/11/2017 10:09 AM
Final Approval Date: 05/26/2017		

Office of the Attorney General
Statewide Automated Victim Notification Services (SAVNS)
Fiscal Year 2017 Invoice

	Quarter		
Place an "X" to the right of the applicable quarter(s)	**1st Quarter**	November 30, 2016	X
	2nd Quarter	February 28, 2017	
	3rd Quarter	May 31, 2017	
	4th Quarter	August 31, 2017	

Mail To: **Office of the Attorney General** **Contract & Asset Management Division - MC005** **P.O. Box 12548** **Austin, TX 78711-2548**	**Date of Appriss Invoice:**	
	Appriss Invoice #:	
	Texas TIN:	
	County/Agency Name:	**Hidalgo County**
	Mailing Address:	2808 S. Business Hwy. 281
	City:	Edinburg
	State:	TX
Contracts and Asset Management Division Contact	**Zip Code:**	78539
Attn: Grants & Contracts Section	**Contact Person:**	Ray Eufracio, CPA
Title: Program Specialist	**Title:**	County Auditor
Email: chris.gersbach@oag.texas.gov	**Email Address:**	ray.eufracio@auditor.co.hidalgo.tx.us
Telephone: (512) 936-1653	**Telephone:**	956-318-2511 x4604

Service Quarter End	**OAG Grant # 1770981**	**Amount of Clain**
Nov-16	**PCA 10352**	**$6,928.83**
Note - 1: Invoice must be received for the prior quarter by the 5th of the next month following the end of each quarter.	**Description of Services: Note 2:** Reimbursement for services rendered on a contract basis under the Statewide Automated Victim Notification Service (SAVNS) Grant to the Office of the Attorney General (Term: September 1, 2016 to August 31, 2017). **Note - 3: None of the costs billed under this invoice have been charged to any other state or federal grant, contract, or any other funding source. I certify that the expenses being requested for reimbursement are correct and unpaid.**	**Note - 4:** The amount of claim must not exceed the amount stated in "Quarterly Amount" line on the Certified Vendor Invoice.
Authorized Official or Designee Signature **Note - 5:** Must be signed by the Authorized Official, Financial or Alternate Designee		
	Signature of Authorized Official or Alternate Designee	**Date**
	Type/Print Authorized Official Name or Alternate Designee and Title	

For OAG Use Only

Date Received by Contracts and Asset Management Division of the OAG:	CAMD Fiscal Approval / Date	Date Received by OAG Accounting:

Office of the Attorney General
Statewide Automated Victim Notification Services (SAVNS)
Fiscal Year 2017 Invoice

	Quarter	
Place an "X" to the right of the applicable quarter(s)	**1st Quarter**	November 30, 2016
	2nd Quarter	February 28, 2017
	3rd Quarter	May 31, 2017
	4th Quarter	August 31, 2017

Mail To: **Office of the Attorney General** **Contract & Asset Management Division - MC005** **P.O. Box 12548** **Austin, TX 78711-2548**	**Date of Appriss Invoice:**	
	Appriss Invoice #:	
	Texas TIN:	
	County/Agency Name:	Hidalgo County
	Mailing Address:	2808 S. Business Hwy. 281
	City:	Edinburg
	State:	TX
Contracts and Asset Management Division Contact **Attn: Grants & Contracts Section** **Title: Program Specialist** **Email: chris.gersbach@oag.texas.gov** **Telephone: (512) 936-1653**	**Zip Code:**	78539
	Contact Person:	Ray Eufracio, CPA
	Title:	County Auditor
	Email Address:	ray.eufracio@auditor.co.hidalgo.tx.u
	Telephone:	956-318-2511 x4604

Service Quarter End	**OAG Grant # 1770981**	**Amount**
Feb-17	**PCA 10352**	**$6**
Note - 1: Invoice must be received for the prior quarter by the 5th of the next month following the end of each quarter.	**Description of Services: Note 2:** Reimbursement for services rendered on a contract basis under the Statewide Automated Victim Notification Service (SAVNS) Grant to the Office of the Attorney General (Term: September 1, 2016 to August 31, 2017). **Note - 3: None of the costs billed under this invoice have been charged to any other state or federal grant, contract, or any other funding source. I certify that the expenses being requested for reimbursement are correct and unpaid.**	**Note - 4:** The claim must no amount stated Amount" line c Vendor Invoic
Authorized Official or Designee Signature **Note - 5:** Must be signed by the Authorized Official, Financial or Alternate Designee		
	Signature of Authorized Official or Alternate Designee	**Da**
	Type/Print Authorized Official Name or Alternate Designee and Title	

For OAG Use Only

Date Received by Contracts and Asset Management Division of the OAG:	CAMD Fiscal Approval / Date	Date Received by OAG A

X

us

of Claim

6,928.83

amount of
t exceed the
l in "Quarterly
on the Certified
e.

ate

Accounting:

Office of the Attorney General
Statewide Automated Victim Notification Services (SAVNS)
Fiscal Year 2017 Invoice

	Quarter	
Place an "X" to the right of the applicable quarter(s)	**1st Quarter**	November 30, 2016
	2nd Quarter	February 28, 2017
	3rd Quarter	May 31, 2017
	4th Quarter	August 31, 2017

Mail To: **Office of the Attorney General** **Contract & Asset Management Division - MC005** **P.O. Box 12548** **Austin, TX 78711-2548**	**Date of Appriss Invoice:**	
	Appriss Invoice #:	
	Texas TIN:	
	County/Agency Name:	Hidalgo County
	Mailing Address:	2808 S. Business Hwy. 281
	City:	Edinburg
	State:	TX
Contracts and Asset Management Division Contact **Attn: Grants & Contracts Section** **Title: Program Specialist** **Email: chris.gersbach@oag.texas.gov** **Telephone: (512) 936-1653**	**Zip Code:**	78539
	Contact Person:	Ray Eufracio, CPA
	Title:	County Auditor
	Email Address:	ray.eufracio@auditor.co.hidalgo.tx.u
	Telephone:	956-318-2511 x4604

Service Quarter End	**OAG Grant # 1770981**	**Amount**
May-17	**PCA 10352**	**$6**
Note - 1: Invoice must be received for the prior quarter by the 5th of the next month following the end of each quarter.	**Description of Services: Note 2:** Reimbursement for services rendered on a contract basis under the Statewide Automated Victim Notification Service (SAVNS) Grant to the Office of the Attorney General (Term: September 1, 2016 to August 31, 2017). **Note - 3: None of the costs billed under this invoice have been charged to any other state or federal grant, contract, or any other funding source. I certify that the expenses being requested for reimbursement are correct and unpaid.**	**Note - 4:** The claim must no amount stated Amount" line o Vendor Invoic
Authorized Official or Designee Signature **Note - 5:** Must be signed by the Authorized Official, Financial or Alternate Designee		
	Signature of Authorized Official or Alternate Designee	**Da**
	Type/Print Authorized Official Name or Alternate Designee and Title	

For OAG Use Only

Date Received by Contracts and Asset Management Division of the OAG:	CAMD Fiscal Approval / Date	Date Received by OAG A

X

us

of Claim

,928.83

amount of
t exceed the
l in "Quarterly
on the Certified
e.

ate

Accounting:

Office of the Attorney General
Statewide Automated Victim Notification Services (SAVNS)
Fiscal Year 2017 Invoice

	Quarter	
Place an "X" to the right of the applicable quarter(s)	**1st Quarter**	November 30, 2016
	2nd Quarter	February 28, 2017
	3rd Quarter	May 31, 2017
	4th Quarter	August 31, 2017

Mail To: **Office of the Attorney General** **Contract & Asset Management Division - MC005** **P.O. Box 12548** **Austin, TX 78711-2548**	**Date of Appriss Invoice:**	
	Appriss Invoice #:	
	Texas TIN:	
	County/Agency Name:	Hidalgo County
	Mailing Address:	2808 S. Business Hwy. 281
	City:	Edinburg
	State:	TX
Contracts and Asset Management Division Contact **Attn: Grants & Contracts Section** **Title: Program Specialist** **Email: chris.gersbach@oag.texas.gov** **Telephone: (512) 936-1653**	**Zip Code:**	78539
	Contact Person:	Ray Eufracio, CPA
	Title:	County Auditor
	Email Address:	ray.eufracio@auditor.co.hidalgo.tx.u
	Telephone:	956-318-2511 x4604

Service Quarter End	**OAG Grant # 1770981**	**Amount**
Aug-17	**PCA 10352**	
Note - 1: Invoice must be received for the prior quarter by the 5th of the next month following the end of each quarter.	**Description of Services: Note 2:** Reimbursement for services rendered on a contract basis under the Statewide Automated Victim Notification Service (SAVNS) Grant to the Office of the Attorney General (Term: September 1, 2016 to August 31, 2017). **Note - 3: None of the costs billed under this invoice have been charged to any other state or federal grant, contract, or any other funding source. I certify that the expenses being requested for reimbursement are correct and unpaid.**	**Note - 4:** The claim must no amount stated Amount" line c Vendor Invoic
Authorized Official or Designee Signature **Note - 5:** Must be signed by the Authorized Official, Financial or Alternate Designee		
	Signature of Authorized Official or Alternate Designee	**Da**
	Type/Print Authorized Official Name or Alternate Designee and Title	

For OAG Use Only

Date Received by Contracts and Asset Management Division of the OAG:	CAMD Fiscal Approval / Date	Date Received by OAG A

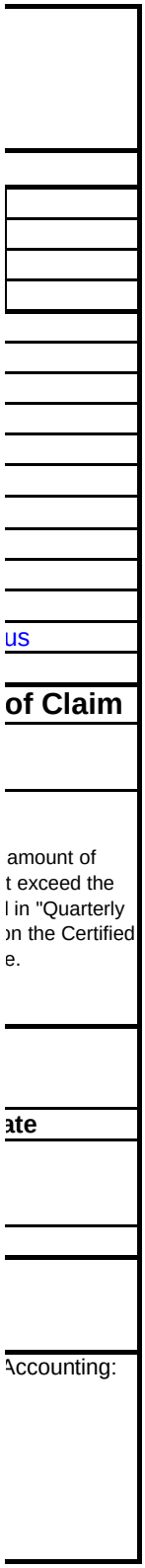
us
of Claim
amount of
t exceed the
l in "Quarterly
on the Certified
e.
ate
Accounting:

KEN PAXTON
ATTORNEY GENERAL OF TEXAS

Texas Statewide Automated Victim Notification Service (SAVNS) FY 2017 Quarterly Verification of Continuing Production Record

The purpose of this record is to establish a regular schedule for the Grantee to provide an update regarding the Texas SAVNS Program. The intent is to ensure that the Grantee is aware of the ongoing status of its Texas SAVNS Program functionality and continuing production. The OAG will crosscheck Grantee verifications with those of the Certified Vendor.

Grantee:	HIDALGO COUNTY	Contract Number:	**1770981**

Yes	No	N/A	Grantee Responsibility
X			As of the date below, SAVNS Jail Records are on production and available.
X			As of the date below, SAVNS Court Records are on production and available.
X			County SAVNS Problem Log notes all problems and resolutions.
	X		Program Coordinator/Grant Contact keeps a SAVNS grant file.

Check 'Yes' or 'No' for each box.
The SAVNS file is kept at Auditor's Office

The primary responsibility for signing this verification is the Designated Authorized Official. Unchecked or checked 'No' boxes require an explanation in the Explanation/Comments Box.

County Verification:

_____
Signature

RAMON GARCIA
Printed Name

COUNTY JUDGE
Title

_____
Date

Explanation/Comments:

*** This completed and signed document must be submitted as an attachment to the quarterly invoice in order for payment to be made on your County's behalf, for costs associated with Annual Maintenance. Please keep a copy in your grant file.

AI-59940 **Budget and Management** **21. D. 1.**

CC - REGULAR

Meeting Date: 05/30/2017

Submitted For: Sergio Cruz, BUDGET & MANAGEMENT

Submitted By: Ivan Cantu, BUDGET & MANAGEMENT

Department: BUDGET & MANAGEMENT

Information

CAPTION

2016 General Fund & Special Revenue Fund-Capital Leases:
1. Approval of certification of revenues, as certified by the County Auditor, to fund capital lease expenditures for various departments.
2. Approval of 2016 appropriation of revenues & expenditures to fund capital lease expenditures for various departments.
3. Approval of various 2016 intradepartmental transfers to fund capital lease expenditures for various departments.

BACKGROUND

Fiscal Impact

CALENDAR YEAR: 2016 **ACCT. #:** G/F & Special Revenue

FUNDS AVAILABLE Y/N?: Y **MATCHING FUNDS Y/N?:**

BUDGETARY IMPACT:

Please refer to attached certification of revenues, budget amendments, & intradepartmental transfers, submitted by the Co. Auditor's Office.

Attachments

COR
BA #1
BA #2
BA #3
BA #4 LIT
BA #5 LIT
BA #6 LIT

Form Review

Inbox **Reviewed By** **Date**

Ivan Cantu (Originator)	Ivan Cantu	05/25/2017 11:10 AM
Budget & Management	Veronica Ortiz	05/25/2017 11:21 AM
Final Approval	Monica Salinas	05/26/2017 02:58 PM

Form Started By: Ivan Cantu Started On: 05/22/2017 10:32 AM

Final Approval Date: 05/26/2017

COUNTY of HIDALGO



EDINBURG, TEXAS 78539

HIDALGO COUNTY AUDITOR'S OFFICE
Hidalgo County Administration Building
2808 South Business Highway 281
Edinburg, Texas 78539-6243
PHONE: (956) 318-2511
FAX: (956) 318-2577
WEBSITE: www.co.hidalgo.tx.us/auditor

May 30, 2017

The Honorable Ramon Garcia, Hidalgo County Judge
The Honorable David Fuentes, Commissioner, Precinct No. 1
The Honorable Eduardo "Eddie" Cantu, Commissioner, Precinct No. 2
The Honorable Jose M. Flores, Commissioner, Precinct No. 3
The Honorable Joseph Palacios, Commissioner, Precinct No. 4

RE: Certification of Revenue

Dear Judge and Commissioners:

Pursuant to Local Government Code § 111.07075 SPECIAL BUDGET FOR REVENUE RECEIVED AFTER START OF FISCAL YEAR:

> The county auditor shall certify to the commissioners court the receipt of revenue from a new source not anticipated before the adoption of the budget and not included in the budget for that fiscal year. On certification, the court may adopt a special budget for the limited purpose of spending the revenue for general purposes or for any of its intended purposes.

I, Ray Eufracio, County Auditor of Hidalgo County, certify to the Hidalgo County Commissioners Court the revenue from other financing sources for capital leases in the amount of $1,092,597.08 for various departments. These funds may now be made available by creating a new special budget or amending a current budget for its intended purposes.

CERTIFIED BY:

Raymundo Eufracio, CPA
Hidalgo County Auditor

5/24/17
Date

HIDALGO COUNTY DISTRICT JUDGES

LUIS M. SINGLETERRY	RODOLFO DELGADO	J. R. "BOBBY" FLORES	ROSE GUERRA REYNA	JUAN R. PARTIDA	MARIO E. RAMIREZ, JR.	NOE GONZALEZ	LETICIA LOPEZ	L. KENO VASQUEZ	ISRAEL RAMON, JR.	RENEE R. BETANCOURT
JUDGE, 92ND D.C.	JUDGE, 93RD D.C.	JUDGE, 139TH D.C.	JUDGE, 206TH D.C.	JUDGE, 275TH D.C.	JUDGE, 332ND D.C.	JUDGE, 370TH D.C. OVERSEER	JUDGE, 389TH D.C.	JUDGE, 398TH D.C.	JUDGE, 430TH D.C.	JUDGE, 449TH D.C.

DATE: MAY 2, 2017
DEPARTMENT HEAD: RAY EUFRACIO, CPA, HIDALGO COUNTY AUDITOR
DEPARTMENT NAME: HIDALGO COUNTY AUDITOR'S OFFICE
PREPARED BY: MILLY RODRIGUEZ
ACCOUNT NUMBER: 6-XXXX-XXX-XX-XXX-XXX-X-XXX

SUBJECT: Interfund transfer(s) (Increases(decrease)) in Accordance with Local Government Code, Chapter 111, Subchapter C
Honorable Commissioners' Court of Hidalgo County:

I would like to request the following amendments (increases) in accordance with Local Government Code, Chapter 111, Subchapter C.

	Account Name	Account Number	PD 1-13	Amount
C1	6-1100-412-00-008-001-0-780	389TH DC-CAPITAL LEASES	MXO-003194	4,991.03
	6-1100-393-70-000-000-0-000	OTHER FINANCING SOURCES-CAPITAL LEASES		4,991.03
C2	6-1100-412-00-022-001-0-780	CCL#2-CAPITAL LEASES	C85112169	4,677.82
	6-1100-393-70-000-000-0-000	OTHER FINANCING SOURCES-CAPITAL LEASES		4,677.82
C3	6-1100-412-00-045-001-0-780	AUXILIARY CRT-CAPITAL LEASES	C85094683	4,969.14
	6-1100-393-70-000-000-0-000	OTHER FINANCING SOURCES-CAPITAL LEASES		4,969.14
C4	6-1242-412-00-060-001-0-780	JUSTICE CRT TECH-CAPITAL LEASES	C85099848	2,141.09
	6-1242-393-70-000-000-0-000	OTHER FINANCING SOURCES-CAPITAL LEASES		2,141.09
C5	6-1242-412-00-060-001-0-780	JUSTICE CRT TECH-CAPITAL LEASES	C85099960	621.51
	6-1242-393-70-000-000-0-000	OTHER FINANCING SOURCES-CAPITAL LEASES		621.51
C6	6-1242-412-00-060-001-0-780	JUSTICE CRT TECH-CAPITAL LEASES	C85100031	621.51
	6-1242-393-70-000-000-0-000	OTHER FINANCING SOURCES-CAPITAL LEASES		621.51
C7	6-1242-412-00-060-001-0-780	JUSTICE CRT TECH-CAPITAL LEASES	2 COPIERS	13,001.00
	6-1242-393-70-000-000-0-000	OTHER FINANCING SOURCES-CAPITAL LEASES		13,001.00
C8	6-1242-412-00-060-001-0-780	JUSTICE CRT TECH-CAPITAL LEASES	C85100833	6,500.50
	6-1242-393-70-000-000-0-000	OTHER FINANCING SOURCES-CAPITAL LEASES		6,500.50
C9	6-1100-412-00-066-001-0-780	JP PCT 3/PL 2-CAPITAL LEASE	XS798DTE	4,770.57
	6-1100-393-70-000-000-0-000	OTHER FINANCING SOURCES-CAPITAL LEASES		4,770.57
C10	6-1100-412-00-070-001-0-780	INDIGENT DEFENSE-CAPITAL LEASES	MXO-003215	5,081.97
	6-1100-393-70-000-000-0-000	OTHER FINANCING SOURCES-CAPITAL LEASES		5,081.97
C11	6-1100-412-00-080-002-0-780	CRIM DA-CAPITAL LEASES	4 COPIERS	22,379.28
	6-1100-393-70-000-000-0-000	OTHER FINANCING SOURCES-CAPITAL LEASES		22,379.28
C12	6-1100-412-00-080-002-0-780	CRIM DA-CAPITAL LEASES	10 COPIERS	67,735.14
	6-1100-393-70-000-000-0-000	OTHER FINANCING SOURCES-CAPITAL LEASES		67,735.14
C13	6-1100-412-30-085-003-0-780	PUBLIC DEFENDER-CAPITAL LEASES	C85103211	5,533.32
	6-1100-393-70-000-000-0-000	OTHER FINANCING SOURCES-CAPITAL LEASES		5,533.32
C14	6-1247-412-50-100-001-0-780	LAW LIBRARY-CAPITAL LEASES	RKJ19279	4,130.10
	6-1247-393-70-000-000-0-000	OTHER FINANCING SOURCES-CAPITAL LEASES		4,130.10

	Account Name	Account Number	PD 1-13	Amount
C15	6-1100-415-14-115-001-0-780	DBM-BUDGET DIV-CAPITAL LEASES	C85113412	7,750.84
	6-1100-393-70-000-000-0-000	OTHER FINANCING SOURCES-CAPITAL LEASES		7,750.84
C16	6-1100-432-00-121-001-0-780	PCT1 SANITATION-CAPITAL LEASES	V#3HTJGTKT1HN46666	205,744.32
	6-1100-393-70-000-000-0-000	OTHER FINANCING SOURCES-CAPITAL LEASES	A#67824	205,744.32
C17	6-1100-432-00-121-001-0-780	PCT1 SANITATION-CAPITAL LEASES	V#3HTJGTKT3HN46666	202,744.32
	6-1100-393-70-000-000-0-000	OTHER FINANCING SOURCES-CAPITAL LEASES	A#67825	202,744.32
C18	6-1100-432-00-121-001-0-780	PCT1 SANITATION-CAPITAL LEASES	L856617789	7,256.97
	6-1100-393-70-000-000-0-000	OTHER FINANCING SOURCES-CAPITAL LEASES		7,256.97
C19	6-1200-431-00-121-004-0-780	PCT1 ADM-CAPITAL LEASES	L856718786	7,256.97
	6-1200-393-70-000-000-0-000	OTHER FINANCING SOURCES-CAPITAL LEASES		7,256.97
C20	6-1200-431-00-121-004-0-780	PCT1 ADM-CAPITAL LEASES	LA75603657	7,256.99
	6-1200-393-70-000-000-0-000	OTHER FINANCING SOURCES-CAPITAL LEASES		7,256.99
C21	6-1200-431-00-122-005-0-780	PCT2 ADM-CAPITAL LEASES	RRB31556	5,413.95
	6-1200-393-70-000-000-0-000	OTHER FINANCING SOURCES-CAPITAL LEASES		5,413.95
C22	6-1100-466-00-122-018-0-780	PCT2 CRC SAN JUAN-CAPITAL LEASES	QNR05809	2,893.01
	6-1100-393-70-000-000-0-000	OTHER FINANCING SOURCES-CAPITAL LEASES		2,893.01
C23	6-1100-432-00-123-001-0-780	PCT3 SANITATION-CAPITAL LEASES	V#3HTJGTKT1HN69320	157,682.11
	6-1100-393-70-000-000-0-000	OTHER FINANCING SOURCES-CAPITAL LEASES		157,682.11
C24	6-1100-432-00-123-001-0-780	PCT3 SANITATION-CAPITAL LEASES	V#3HTJGTKTXHN69320	157,682.11
	6-1100-393-70-000-000-0-000	OTHER FINANCING SOURCES-CAPITAL LEASES		157,682.11
C25	6-1200-431-00-124-005-0-780	PCT4 ADM-CAPITAL LEASES	C85109516	5,100.08
	6-1200-393-70-000-000-0-000	OTHER FINANCING SOURCES-CAPITAL LEASES		5,100.08
C26	6-1100-413-00-125-001-0-780	EXECUTIVE OFFICE-CAPITAL LEASES	C85098802	7,876.80
	6-1100-393-70-000-000-0-000	OTHER FINANCING SOURCES-CAPITAL LEASES		7,876.80
C27	6-1100-432-70-125-039-0-780	NUISANCE ABATEMENT PRG-CAPITAL LEASES	C85112181	7,877.19
	6-1100-393-70-000-000-0-000	OTHER FINANCING SOURCES-CAPITAL LEASES		7,877.19
C28	6-1100-414-00-130-001-0-780	ELECTIONS DEPT-CAPITAL LEASES	C85094444	32,010.37
	6-1100-393-70-000-000-0-000	OTHER FINANCING SOURCES-CAPITAL LEASES		32,010.37
C29	6-1100-414-00-130-001-0-780	ELECTIONS DEPT-CAPITAL LEASES	C85110146	11,881.09
	6-1100-393-70-000-000-0-000	OTHER FINANCING SOURCES-CAPITAL LEASES		11,881.09
C30	6-1100-415-15-140-001-0-780	TAX OFF-CAPITAL LEASES	QLL07600	2,987.99
	6-1100-393-70-000-000-0-000	OTHER FINANCING SOURCES-CAPITAL LEASES		2,987.99
C31	6-1100-415-15-140-001-0-780	TAX OFF-CAPITAL LEASES	3 COPIERS	10,806.03
	6-1100-393-70-000-000-0-000	OTHER FINANCING SOURCES-CAPITAL LEASES		10,806.03
C32	6-1100-415-16-150-001-0-780	CO TREASURER-CAPITAL LEASES	BOW-594573	8,107.95
	6-1100-393-70-000-000-0-000	OTHER FINANCING SOURCES-CAPITAL LEASES		8,107.95
C33	6-1100-415-16-150-001-0-780	CO TREASURER-CAPITAL LEASES	2 COPIERS	4,276.52
	6-1100-393-70-000-000-0-000	OTHER FINANCING SOURCES-CAPITAL LEASES		4,276.52

	Account Name	Account Number	PD 1-13	Amount
C34	6-1100-415-18-160-001-0-780	PURCHASING-CAPITAL LEASES	C85095204	6,724.21
	6-1100-393-70-000-000-0-000	OTHER FINANCING SOURCES-CAPITAL LEASES		6,724.21
C35	6-1100-415-21-170-001-0-780	CO AUDITOR-CAPITAL LEASES	2 COPIERS	10,312.04
	6-1100-393-70-000-000-0-000	OTHER FINANCING SOURCES-CAPITAL LEASES		10,312.04
C36	6-1100-415-21-170-001-0-780	CO AUDITOR-CAPITAL LEASES	BOW-594439	8,107.95
	6-1100-393-70-000-000-0-000	OTHER FINANCING SOURCES-CAPITAL LEASES		8,107.95
C37	6-1100-421-00-280-001-0-780	SHERIFF-CAPITAL LEASES	3 COPIERS	16,340.58
	6-1100-393-70-000-000-0-000	OTHER FINANCING SOURCES-CAPITAL LEASES		16,340.58
C38	6-1100-423-70-330-001-0-780	JUVENILE CI-CAPITAL LEASES	A2M-654224	5,886.98
	6-1100-393-70-330-001-0-000	OTHER FINANCING SOURCES-CAPITAL LEASES		5,886.98
C39	6-1100-423-79-330-001-0-780	JUVENILE DET PRE-CAPITAL LEASES	A2M-654319	5,886.98
	6-1100-393-70-330-001-0-000	OTHER FINANCING SOURCES-CAPITAL LEASES		5,886.98
C40	6-1100-423-71-330-001-0-780	JUVENILE DS-CAPITAL LEASES	A2M-654486	5,886.98
	6-1100-393-70-300-001-0-000	OTHER FINANCING SOURCES-CAPITAL LEASES		5,886.98
C41	6-1100-423-79-330-001-0-780	JUVENILE DET PRE-CAPITAL LEASES	C7X-243508	2,076.99
	6-1100-393-70-300-001-0-000	OTHER FINANCING SOURCES-CAPITAL LEASES		2,076.99
C42	6-1100-423-70-330-001-0-780	JUVENILE CI-CAPITAL LEASES	C7X-243510	2,076.99
	6-1100-393-70-330-001-0-000	OTHER FINANCING SOURCES-CAPITAL LEASES		2,076.99
C43	6-1295-423-78-330-028-0-780	JUV BOOT CAMP PAS-CAPITAL LEASES	C7X-243602	2,076.99
	6-1295-393-70-000-000-0-000	OTHER FINANCING SOURCES-CAPITAL LEASES		2,076.99
C44	6-1295-423-78-330-028-0-780	JUV BOOT CAMP PAS-CAPITAL LEASES	EX9-309265	7,595.97
	6-1295-393-70-000-000-0-000	OTHER FINANCING SOURCES-CAPITAL LEASES		7,595.97
C45	6-1100-441-00-340-001-0-780	HEALTH ADM-CAPITAL LEASES	C85097883	14,586.85
	6-1100-393-70-000-000-0-000	OTHER FINANCING SOURCES-CAPITAL LEASES		14,586.85
C46	6-1100-461-00-380-001-0-780	TX AGRILIFE EXT-CAPITAL LEASES		5,275.98
	6-1100-393-70-000-000-0-000	OTHER FINANCING SOURCES-CAPITAL LEASES	MXO-002007	5,275.98
	6-1100-432-00-124-001-0-780	PCT4 SANITATION-CAPITAL LEASES		2.00
	6-1100-393-70-000-000-0-000	OTHER FINANCING SOURCES-CAPITAL LEA	2 CATERPILLAR	2.00
			TOTAL BUDGET INCREASE REQUEST	$ 1,092,597.08

REASON: TO APPROPRIATE FOR CAPITAL LEASE AGREEMENTS APPROVED BY ON COMMISSIONERS' COURT ON VARIOUS DATES AND TO ESTIMATE REVENUES FOR THE SAME AMOUNT.

DEPARTMENT HEAD SIGNATURE

APPROVED COMMISSIONERS' COURT ___/___/___ DATE ATTEST COUNTY CLERK

DATE: MAY 2, 2017

DEPARTMENT HEAD: RAY EUFRACIO, CPA, HIDALGO COUNTY AUDITOR
DEPARTMENT NAME: HIDALGO COUNTY AUDITOR'S OFFICE
PREPARED BY: MILLY RODRIGUEZ
ACCOUNT NUMBER: 6-XXXX-XXX-XX-XXX-XXX-X-XXX

SUBJECT: Interfund transfer(s) (Increases(decrease)) in Accordance with Local Government Code, Chapter 111, Subchapter C

Honorable Commissioners' Court of Hidalgo County:

I would like to request the following amendments (increases) departmental budget in accordance with Local Government Code, Chapter 111, Subchapter C.

	ACCOUNT NAME	ACCOUNT NAME			AMOUNT
C[1]	6-1100-471-00-000-000-0-862	CAPITAL LEASES-OTHER DEBT PRINCIPAL			510.77
	6-1100-472-00-000-000-0-864	CAPITAL LEASES-OTHER DEBT INTEREST			97.31
	6-1100-412-00-008-001-0-780	389TH DC-CAPITAL LEASES	'16 LEASE	MXO-003194	(608.08)
C[2]	6-1100-471-00-000-000-0-862	CAPITAL LEASES-OTHER DEBT PRINCIPAL			247.22
	6-1100-472-00-000-000-0-864	CAPITAL LEASES-OTHER DEBT INTEREST			26.92
	6-1100-412-00-022-001-0-780	CCL#2-CAPITAL LEASES	'16 LEASE	C85112169	(274.14)
C[3]	6-1100-471-00-000-000-0-862	CAPITAL LEASES-OTHER DEBT PRINCIPAL			1,113.25
	6-1100-472-00-000-000-0-864	CAPITAL LEASES-OTHER DEBT INTEREST			319.46
	6-1100-412-00-045-001-0-780	AUXILIARY CRT-CAPITAL LEASES	'16 LEASE	C85094683	(1,432.71)
C[4]	6-1242-471-00-000-000-0-862	CAPITAL LEASES-OTHER DEBT PRINCIPAL			298.70
	6-1242-472-00-000-000-0-864	CAPITAL LEASES-OTHER DEBT INTEREST			138.88
	6-1242-412-00-060-001-0-780	JUSTICE CRT TECH-CAPITAL LEASES	'16 LEASE	C85099848	(437.58)
C[5]	6-1242-471-00-000-000-0-862	CAPITAL LEASES-OTHER DEBT PRINCIPAL			103.61
	6-1242-472-00-000-000-0-864	CAPITAL LEASES-OTHER DEBT INTEREST			41.64
	6-1242-412-00-060-001-0-780	JUSTICE CRT TECH-CAPITAL LEASES	'16 LEASE	C85099960	(145.25)
C[6]	6-1242-471-00-000-000-0-862	CAPITAL LEASES-OTHER DEBT PRINCIPAL			88.35
	6-1242-472-00-000-000-0-864	CAPITAL LEASES-OTHER DEBT INTEREST			36.15
	6-1242-412-00-060-001-0-780	JUSTICE CRT TECH-CAPITAL LEASES	'16 LEASE	C85100031	(124.50)
C[7]	6-1242-471-00-000-000-0-862	CAPITAL LEASES-OTHER DEBT PRINCIPAL			1,322.66
	6-1242-472-00-000-000-0-864	CAPITAL LEASES-OTHER DEBT INTEREST			706.54
	6-1242-412-00-060-001-0-780	JUSTICE CRT TECH-CAPITAL LEASES	'16 LEASE	2 COPIERS	(2,029.20)
C[8]	6-1242-471-00-000-000-0-862	CAPITAL LEASES-OTHER DEBT PRINCIPAL			548.49
	6-1242-472-00-000-000-0-864	CAPITAL LEASES-OTHER DEBT INTEREST			297.01
	6-1242-412-00-060-001-0-780	JUSTICE CRT TECH-CAPITAL LEASES	'16 LEASE	C85100833	(845.50)
C[9]	6-1100-471-00-000-000-0-862	CAPITAL LEASES-OTHER DEBT PRINCIPAL			120.17
	6-1100-472-00-000-000-0-864	CAPITAL LEASES-OTHER DEBT INTEREST			87.83
	6-1100-412-00-066-001-0-780	JP PCT 3/PL 2-CAPITAL LEASE	'16 LEASE	XS798DTE	(208.00)
C[10]	6-1100-471-00-000-000-0-862	CAPITAL LEASES-OTHER DEBT PRINCIPAL			255.55
	6-1100-472-00-000-000-0-864	CAPITAL LEASES-OTHER DEBT INTEREST			140.03
	6-1100-412-00-070-001-0-780	INDIGENT DEFENSE-CAPITAL LEASES	'16 LEASE	MXO-003215	(395.58)
C[11]	6-1100-471-00-000-000-0-862	CAPITAL LEASES-OTHER DEBT PRINCIPAL			4,633.88
	6-1100-472-00-000-000-0-864	CAPITAL LEASES-OTHER DEBT INTEREST			2,441.80
	6-1100-412-00-080-002-0-780	CRIM DA-CAPITAL LEASES	'16 LEASE	4 COPIERS	(7,075.68)

	ACCOUNT NAME	ACCOUNT NAME		AMOUNT
C[12]	6-1100-471-00-000-000-0-862	CAPITAL LEASES-OTHER DEBT PRINCIPAL		14,176.74
	6-1100-472-00-000-000-0-864	CAPITAL LEASES-OTHER DEBT INTEREST		7,011.50
	6-1100-412-00-080-002-0-780	CRIM DA-CAPITAL LEASES '16 LEASE	10 COPIERS	(21,188.24)
C[13]	6-1100-471-00-000-000-0-862	CAPITAL LEASES-OTHER DEBT PRINCIPAL		369.24
	6-1100-472-00-000-000-0-864	CAPITAL LEASES-OTHER DEBT INTEREST		210.24
	6-1100-412-30-085-003-0-780	PUBLIC DEFENDER-CAPITAL LEASES	C85103211	(579.48)
C[14]	6-1247-471-00-000-000-0-862	CAPITAL LEASES-OTHER DEBT PRINCIPAL		352.81
	6-1247-472-00-000-000-0-864	CAPITAL LEASES-OTHER DEBT INTEREST		177.99
	6-1247-412-50-100-001-0-780	LAW LIBRARY-CAPITAL LEASES	RKJ19279	(530.80)
C[15]	6-1100-471-00-000-000-0-862	CAPITAL LEASES-OTHER DEBT PRINCIPAL		191.34
	6-1100-472-00-000-000-0-864	CAPITAL LEASES-OTHER DEBT INTEREST		51.40
	6-1100-415-14-115-001-0-780	DBM-BUDGET DIV-CAPITAL LEASES	C85113412	(242.74)
C[16-17]	6-1100-471-00-000-000-0-862	CAPITAL LEASES-OTHER DEBT PRINCIPAL		64,011.49
	6-1100-472-00-000-000-0-864	CAPITAL LEASES-OTHER DEBT INTEREST		-
	6-1100-432-00-121-001-0-780	PCT1 SANITATION-CAPITAL LEASES '16 LEASE	2 CATERPILLARS	(64,011.49)
C[18]	6-1100-471-00-000-000-0-862	CAPITAL LEASES-OTHER DEBT PRINCIPAL		366.76
	6-1100-472-00-000-000-0-864	CAPITAL LEASES-OTHER DEBT INTEREST		78.62
	6-1100-432-00-121-001-0-780	PCT1 SANITATION-CAPITAL LEASES	L856617789	(445.38)
C[19]	6-1200-471-00-000-000-0-862	CAPITAL LEASES-OTHER DEBT PRINCIPAL		551.66
	6-1200-472-00-000-000-0-864	CAPITAL LEASES-OTHER DEBT INTEREST		116.41
	6-1200-431-00-121-004-0-780	PCT1 ADM-CAPITAL LEASES	L856718786	(668.07)
C[20]	6-1200-471-00-000-000-0-862	CAPITAL LEASES-OTHER DEBT PRINCIPAL		2,250.05
	6-1200-472-00-000-000-0-864	CAPITAL LEASES-OTHER DEBT INTEREST		442.63
	6-1200-431-00-121-004-0-780	PCT1 ADM-CAPITAL LEASES	LA75603657	(2,692.68)
C[21]	6-1200-471-00-000-000-0-862	CAPITAL LEASES-OTHER DEBT PRINCIPAL		573.89
	6-1200-472-00-000-000-0-864	CAPITAL LEASES-OTHER DEBT INTEREST		60.67
	6-1200-431-00-122-005-0-780	PCT2 ADM-CAPITAL LEASES	RRB31556	(634.56)
C[22]	6-1100-471-00-000-000-0-862	CAPITAL LEASES-OTHER DEBT PRINCIPAL		855.84
	6-1100-472-00-000-000-0-864	CAPITAL LEASES-OTHER DEBT INTEREST		289.80
	6-1100-466-00-122-018-0-780	PCT2 CRC SAN JUAN-CAPITAL LEASE '16 LEASE	QNR05809	(1,145.64)
C[23-24]	6-1100-471-00-000-000-0-862	CAPITAL LEASES-OTHER DEBT PRINCIPAL		49,418.54
	6-1100-472-00-000-000-0-864	CAPITAL LEASES-OTHER DEBT INTEREST		-
	6-1100-432-00-123-001-0-780	PCT3 SANITATION-CAPITAL LEASES '16 LEASE	2 CATERPILLARS	(49,418.54)
C[25]	6-1200-471-00-000-000-0-862	CAPITAL LEASES-OTHER DEBT PRINCIPAL		372.34
	6-1200-472-00-000-000-0-864	CAPITAL LEASES-OTHER DEBT INTEREST		117.20
	6-1200-431-00-124-005-0-780	PCT4 ADM-CAPITAL LEASES	C85109516	(489.54)
C[26]	6-1100-471-00-000-000-0-862	CAPITAL LEASES-OTHER DEBT PRINCIPAL		945.32
	6-1100-472-00-000-000-0-864	CAPITAL LEASES-OTHER DEBT INTEREST		479.74
	6-1100-413-00-125-001-0-780	EXECUTIVE OFFICE-CAPITAL LEASES '16 LEASE	C85098802	(1,425.06)
C[27]	6-1100-471-00-000-000-0-862	CAPITAL LEASES-OTHER DEBT PRINCIPAL		131.38
	6-1100-472-00-000-000-0-864	CAPITAL LEASES-OTHER DEBT INTEREST		72.21
	6-1100-432-70-125-039-0-780	NUISANCE ABATEMENT PRG-CAPITAL LEASES	C85112181	(203.59)
C[28]	6-1100-471-00-000-000-0-862	CAPITAL LEASES-OTHER DEBT PRINCIPAL		7,885.98
	6-1100-472-00-000-000-0-864	CAPITAL LEASES-OTHER DEBT INTEREST		278.01
	6-1100-414-00-130-001-0-780	ELECTIONS DEPT-CAPITAL LEASES '16 LEASE	C85094444	(8,163.99)

	ACCOUNT NAME	ACCOUNT NAME			AMOUNT
C[29]	6-1100-471-00-000-000-0-862	CAPITAL LEASES-OTHER DEBT PRINCIPAL			702.66
	6-1100-472-00-000-000-0-864	CAPITAL LEASES-OTHER DEBT INTEREST			85.02
	6-1100-414-00-130-001-0-780	ELECTIONS DEPT-CAPITAL LEASES	'16 LEASE	C85110146	(787.68)
C[30]	6-1100-471-00-000-000-0-862	CAPITAL LEASES-OTHER DEBT PRINCIPAL			75.27
	6-1100-472-00-000-000-0-864	CAPITAL LEASES-OTHER DEBT INTEREST			16.46
	6-1100-415-15-140-001-0-780	TAX OFF-CAPITAL LEASES		QLL07600	(91.73)
C[31]	6-1100-471-00-000-000-0-862	CAPITAL LEASES-OTHER DEBT PRINCIPAL			272.25
	6-1100-472-00-000-000-0-864	CAPITAL LEASES-OTHER DEBT INTEREST			59.49
	6-1100-415-15-140-001-0-780	TAX OFF-CAPITAL LEASES		3 COPIERS	(331.74)
C[32]	6-1100-471-00-000-000-0-862	CAPITAL LEASES-OTHER DEBT PRINCIPAL			1,661.24
	6-1100-472-00-000-000-0-864	CAPITAL LEASES-OTHER DEBT INTEREST			336.76
	6-1100-415-16-150-001-0-780	CO TREASURER-CAPITAL LEASES	'16 LEASE	B0W-594573	(1,998.00)
C[33]	6-1100-471-00-000-000-0-862	CAPITAL LEASES-OTHER DEBT PRINCIPAL			719.40
	6-1100-472-00-000-000-0-864	CAPITAL LEASES-OTHER DEBT INTEREST			383.36
	6-1100-415-16-150-001-0-780	CO TREASURER-CAPITAL LEASES	'16 LEASE	2 COPIERS	(1,102.76)
C[34]	6-1100-471-00-000-000-0-862	CAPITAL LEASES-OTHER DEBT PRINCIPAL			1,042.09
	6-1100-472-00-000-000-0-864	CAPITAL LEASES-OTHER DEBT INTEREST			530.21
	6-1100-415-18-160-001-0-780	PURCHASING-CAPITAL LEASES	'16 LEASE	C85095204	(1,572.30)
C[35]	6-1100-471-00-000-000-0-862	CAPITAL LEASES-OTHER DEBT PRINCIPAL			2,416.52
	6-1100-472-00-000-000-0-864	CAPITAL LEASES-OTHER DEBT INTEREST			392.74
	6-1100-415-21-170-001-0-780	CO AUDITOR-CAPITAL LEASES	'16 LEASE	2 COPIERS	(2,809.26)
C[36]	6-1100-471-00-000-000-0-862	CAPITAL LEASES-OTHER DEBT PRINCIPAL			1,449.43
	6-1100-472-00-000-000-0-864	CAPITAL LEASES-OTHER DEBT INTEREST			298.82
	6-1100-415-21-170-001-0-780	CO AUDITOR-CAPITAL LEASES	'16 LEASE	B0W-594439	(1,748.25)
C[37]	6-1100-471-00-000-000-0-862	CAPITAL LEASES-OTHER DEBT PRINCIPAL			636.27
	6-1100-472-00-000-000-0-864	CAPITAL LEASES-OTHER DEBT INTEREST			94.35
	6-1100-421-00-280-001-0-780	SHERIFF-CAPITAL LEASES		3 COPIERS	(730.62)
C[38]	6-1100-471-70-330-001-0-862	CAPITAL LEASES-OTHER DEBT PRINCI	new		1,840.34
	6-1100-472-70-330-001-0-864	CAPITAL LEASES-OTHER DEBT INTERES	new		318.46
	6-1100-423-70-330-001-0-780	JUVENILE CI-CAPITAL LEASES	'16 LEASE	A2M-654224	(2,158.80)
C[39]	6-1100-471-79-330-001-0-862	CAPITAL LEASES-OTHER DEBT PRINCI	new		1,840.34
	6-1100-472-79-330-001-0-864	CAPITAL LEASES-OTHER DEBT INTERES	new		318.46
	6-1100-423-79-330-001-0-780	JUVENILE DET PRE-CAPITAL LEASES	'16 LEASE	A2M-654319	(2,158.80)
C[40]	6-1100-471-71-330-001-0-862	CAPITAL LEASES-OTHER DEBT PRINCI	new		1,840.34
	6-1100-472-71-330-001-0-864	CAPITAL LEASES-OTHER DEBT INTERES	new		318.46
	6-1100-423-71-330-001-0-780	JUVENILE DS-CAPITAL LEASES		A2M-654486	(2,158.80)
C[41]	6-1100-471-79-330-001-0-862	CAPITAL LEASES-OTHER DEBT PRINCIPAL			642.92
	6-1100-472-79-330-001-0-864	CAPITAL LEASES-OTHER DEBT INTEREST			129.52
	6-1100-423-79-330-001-0-780	JUVENILE DET PRE-CAPITAL LEASES	'16 LEASE	C7X-243508	(772.44)
C[42]	6-1100-471-70-330-001-0-862	CAPITAL LEASES-OTHER DEBT PRINCIPAL			642.92
	6-1100-472-70-330-001-0-864	CAPITAL LEASES-OTHER DEBT INTEREST			129.52
	6-1100-423-70-330-001-0-780	JUVENILE CI-CAPITAL LEASES	'16 LEASE	C7X-243510	(772.44)
C[43]	6-1295-471-78-330-028-0-862	CAPITAL LEASES-OTHER DEBT PRINCI	new		423.42
	6-1295-472-78-330-028-0-864	CAPITAL LEASES-OTHER DEBT INTERES	new		91.54
	6-1295-423-78-330-028-0-780	JUV BOOT CAMP PAS-CAPITAL LEAS	'16 LEASE	C7X-243602	(514.96)
	6-1100-471-78-330-028-0-862	CAPITAL LEASES-OTHER DEBT PRINCI	new		219.50
	6-1100-472-78-330-028-0-864	CAPITAL LEASES-OTHER DEBT INTERES	new		37.98
	6-1100-423-78-330-028-0-780	JUV BOOT CAMP PAS-CAPITAL LEAS	'16 LEASE	C7X-243602	(257.48)

	ACCOUNT NAME	ACCOUNT NAME			AMOUNT
C[44]	6-1295-471-78-330-028-0-862	CAPITAL LEASES-OTHER DEBT PRINCIPAL			1,557.11
	6-1295-472-78-330-028-0-864	CAPITAL LEASES-OTHER DEBT INTEREST			327.93
	6-1295-423-78-330-028-0-780	JUV BOOT CAMP PAS-CAPITAL LEAS	'16 LEASE	EX9-309265	(1,885.04)
	6-1100-471-78-330-028-0-862	CAPITAL LEASES-OTHER DEBT PRINCI	new		792.69
	6-1100-472-78-330-028-0-864	CAPITAL LEASES-OTHER DEBT INTERES	new		149.83
	6-1100-423-78-330-028-0-780	JUV BOOT CAMP PAS-CAPITAL LEAS	'16 LEASE	EX9-309265	(942.52)
C[45]	6-1100-471-00-000-000-0-862	CAPITAL LEASES-OTHER DEBT PRINCIPAL			2,971.34
	6-1100-472-00-000-000-0-864	CAPITAL LEASES-OTHER DEBT INTEREST			648.90
	6-1100-441-00-340-001-0-780	HEALTH ADM-CAPITAL LEASES	'16 LEASE	C85097883	(3,620.24)
C[46]	6-1100-471-00-000-000-0-862	CAPITAL LEASES-OTHER DEBT PRINCIPAL			808.76
	6-1100-472-00-000-000-0-864	CAPITAL LEASES-OTHER DEBT INTEREST			162.70
	6-1100-461-00-380-001-0-780	TX AGRILIFE EXT-CAPITAL LEASES	'16 LEASE	MXO-002007	(971.46)
	6-1100-471-00-000-000-0-862	CAPITAL LEASES-OTHER DEBT PRINCIPAL			1,821.36
	6-1100-472-00-000-000-0-864	CAPITAL LEASES-OTHER DEBT INTEREST			151.20
1	6-1100-412-00-005-001-0-780	275TH DC-CAPITAL LEASES	'15 LEASE	C85086083	(1,972.56)
	6-1100-471-00-000-000-0-862	CAPITAL LEASES-OTHER DEBT PRINCIPAL			1,405.06
	6-1100-472-00-000-000-0-864	CAPITAL LEASES-OTHER DEBT INTEREST			129.02
2	6-1100-412-00-027-001-0-780	CCL#7-CAPITAL LEASES	'15 LEASE	C85065935	(1,534.08)
	6-1100-471-00-000-000-0-862	CAPITAL LEASES-OTHER DEBT PRINCIPAL			1,748.00
	6-1100-472-00-000-000-0-864	CAPITAL LEASES-OTHER DEBT INTEREST			119.68
3	6-1100-412-00-028-001-0-780	CCL#8-CAPITAL LEASES	'15 LEASE	C85077272	(1,867.68)
	6-1242-471-00-000-000-0-862	CAPITAL LEASES-OTHER DEBT PRINCIPAL			1,319.84
	6-1242-472-00-000-000-0-864	CAPITAL LEASES-OTHER DEBT INTEREST			150.75
4	6-1242-412-00-060-001-0-780	JUSTICE CRT TECH-CAPITAL LEASES	'15 LEASE	C85081804	(1,470.59)
	6-1100-471-00-000-000-0-862	CAPITAL LEASES-OTHER DEBT PRINCIPAL			1,823.66
	6-1100-472-00-000-000-0-864	CAPITAL LEASES-OTHER DEBT INTEREST			205.54
5	6-1100-412-00-065-001-0-780	JP PCT 3/PL 1-CAPITAL LEASES	'15 LEASE	C85083609	(2,029.20)
	6-1100-471-00-000-000-0-862	CAPITAL LEASES-OTHER DEBT PRINCIPAL			1,563.39
	6-1100-472-00-000-000-0-864	CAPITAL LEASES-OTHER DEBT INTEREST			180.93
6	6-1100-412-30-085-003-0-780	PUBLIC DEFENDER-CAPITAL LEASES	'15 LEASE	C85084383	(1,744.32)
	6-1100-471-00-000-000-0-862	CAPITAL LEASES-OTHER DEBT PRINCIPAL			6,348.57
	6-1100-472-00-000-000-0-864	CAPITAL LEASES-OTHER DEBT INTEREST			434.55
7	6-1100-412-00-090-001-0-780	DIST CLERK-CAPITAL LEASES	'15 LEASE	3 COPIERS	(6,783.12)
	6-1100-471-00-000-000-0-862	CAPITAL LEASES-OTHER DEBT PRINCIPAL			1,604.44
	6-1100-472-00-000-000-0-864	CAPITAL LEASES-OTHER DEBT INTEREST			176.00
8	6-1100-413-00-110-077-0-780	PUBLIC AFFAIRS-CAPITAL LEASES	'15 LEASE	C85072560	(1,780.44)
	6-1100-471-00-000-000-0-862	CAPITAL LEASES-OTHER DEBT PRINCIPAL			39,745.29
	6-1100-472-00-000-000-0-864	CAPITAL LEASES-OTHER DEBT INTEREST			8,268.33
9	6-1100-432-00-124-001-0-780	PCT4 SANITATION-CAPITAL LEASES	'15 LEASE	2 CATERPILLAR	(48,013.62)
	6-1200-471-00-000-000-0-862	CAPITAL LEASES-OTHER DEBT PRINCIPAL			2,441.13
	6-1200-472-00-000-000-0-864	CAPITAL LEASES-OTHER DEBT INTEREST			238.59
10	6-1200-431-00-124-005-0-780	PCT4 ADM-CAPITAL LEASES	'15 LEASE	C85072502	(2,679.72)
	6-1100-471-00-000-000-0-862	CAPITAL LEASES-OTHER DEBT PRINCIPAL			1,729.62
	6-1100-472-00-000-000-0-864	CAPITAL LEASES-OTHER DEBT INTEREST			143.58
11	6-1100-466-00-124-077-0-780	PCT4 CRC-CAPITAL LEASES	'15 LEASE	A2M-648869	(1,873.20)

	ACCOUNT NAME	ACCOUNT NAME		AMOUNT
	6-1100-471-00-000-000-0-862	CAPITAL LEASES-OTHER DEBT PRINCIPAL		8,886.16
	6-1100-472-00-000-000-0-864	CAPITAL LEASES-OTHER DEBT INTEREST		1,332.84
12	6-1100-419-60-125-010-0-780	MAILING SERVICES-CAPITAL LEASES '15 LEASE	mail machine	(10,219.00)
	6-1100-471-00-000-000-0-862	CAPITAL LEASES-OTHER DEBT PRINCIPAL		3,276.77
	6-1100-472-00-000-000-0-864	CAPITAL LEASES-OTHER DEBT INTEREST		330.07
13	6-1100-414-00-130-001-0-780	ELECTIONS DEPT-CAPITAL LEASES '15 LEASE	C85072601	(3,606.84)
	6-1100-471-00-000-000-0-862	CAPITAL LEASES-OTHER DEBT PRINCIPAL		5,787.16
	6-1100-472-00-000-000-0-864	CAPITAL LEASES-OTHER DEBT INTEREST		634.76
14	6-1100-419-10-210-001-0-780	PLANNING DEPT-CAPITAL LEASES '15 LEASE	4 COPIERS	(6,421.92)
	6-1100-471-00-000-000-0-862	CAPITAL LEASES-OTHER DEBT PRINCIPAL		4,032.22
	6-1100-472-00-000-000-0-864	CAPITAL LEASES-OTHER DEBT INTEREST		276.02
15	6-1100-444-00-240-005-0-780	1115 WAIVER DSRIP-CAPITAL LEASES '15 LEASE	C85075547	(4,308.24)
	6-1100-471-00-000-000-0-862	CAPITAL LEASES-OTHER DEBT PRINCIPAL		1,255.12
	6-1100-472-00-000-000-0-864	CAPITAL LEASES-OTHER DEBT INTEREST		147.50
16	6-1100-421-00-291-001-0-780	CONST PCT1-CAPITAL LEASES '15 LEASE	C85084866	(1,402.62)
	6-1100-471-00-000-000-0-862	CAPITAL LEASES-OTHER DEBT PRINCIPAL		1,959.98
	6-1100-472-00-000-000-0-864	CAPITAL LEASES-OTHER DEBT INTEREST		220.90
17	6-1100-444-00-370-001-0-780	VETERANS SRV-CAPITAL LEASES '15 LEASE	C85083329	(2,180.88)
	6-1100-471-00-000-000-0-862	CAPITAL LEASES-OTHER DEBT PRINCIPAL		1,786.24
	6-1100-472-00-000-000-0-864	CAPITAL LEASES-OTHER DEBT INTEREST		81.44
18	6-1100-412-00-001-001-0-780	92ND DC-CAPITAL LEASES '14 LEASE (revised)	C85058722	(1,867.68)
	6-1100-471-00-000-000-0-862	CAPITAL LEASES-OTHER DEBT PRINCIPAL		1,343.15
	6-1100-472-00-000-000-0-864	CAPITAL LEASES-OTHER DEBT INTEREST		23.77
19	6-1100-412-00-002-001-0-780	93RD DC-CAPITAL LEASES '14 LEASE	HRQ08255	(1,366.92)
	6-1100-471-00-000-000-0-862	CAPITAL LEASES-OTHER DEBT PRINCIPAL		1,702.16
	6-1100-472-00-000-000-0-864	CAPITAL LEASES-OTHER DEBT INTEREST		126.40
20	6-1100-412-00-010-001-0-780	430TH DC-CAPITAL LEASES '14 LEASE (revised)	C85052896	(1,828.56)
	6-1100-471-00-000-000-0-862	CAPITAL LEASES-OTHER DEBT PRINCIPAL		2,257.83
	6-1100-472-00-000-000-0-864	CAPITAL LEASES-OTHER DEBT INTEREST		58.65
21	6-1100-412-00-011-001-0-780	449TH DC-CAPITAL LEASES '14 LEASE (revised)	C85041979	(2,316.48)
	6-1100-471-00-000-000-0-862	CAPITAL LEASES-OTHER DEBT PRINCIPAL		2,308.78
	6-1100-472-00-000-000-0-864	CAPITAL LEASES-OTHER DEBT INTEREST		69.64
22	6-1100-412-00-021-001-0-780	CCL#1-CAPITAL LEASES '14 LEASE (revised)	C85043700	(2,378.42)
	6-1242-471-00-000-000-0-862	CAPITAL LEASES-OTHER DEBT PRINCIPAL		1,650.83
	6-1242-472-00-000-000-0-864	CAPITAL LEASES-OTHER DEBT INTEREST		75.25
23	6-1242-412-00-060-001-0-780	JUSTICE CRT TECH-CAPITAL LEASES '14 LEASE	C85057221	(1,726.08)
	6-1100-471-00-000-000-0-862	CAPITAL LEASES-OTHER DEBT PRINCIPAL		1,704.65
	6-1100-472-00-000-000-0-864	CAPITAL LEASES-OTHER DEBT INTEREST		136.51
24	6-1100-412-00-068-001-0-780	JP PCT 4/PL 2-CAPITAL LEASES '14 LEASE (revised)	C85057435	(1,841.16)
	6-1100-471-00-000-000-0-862	CAPITAL LEASES-OTHER DEBT PRINCIPAL	PAID FR 442	2,829.63
	6-1100-472-00-000-000-0-864	CAPITAL LEASES-OTHER DEBT INTEREST	PITNEY BOWES	218.37
25	6-1100-412-00-090-001-0-780	DIST CLERK-CAPITAL LEASES '14 LEASE	LEASE# 2965739	(3,048.00)
	6-1100-471-00-000-000-0-862	CAPITAL LEASES-OTHER DEBT PRINCIPAL		1,170.17
	6-1100-472-00-000-000-0-864	CAPITAL LEASES-OTHER DEBT INTEREST		27.19
26	6-1100-412-00-090-001-0-780	DIST CLERK-CAPITAL LEASES '14 LEASE	C85031932	(1,197.36)

	ACCOUNT NAME	ACCOUNT NAME			AMOUNT
	6-1100-471-00-000-000-0-862	CAPITAL LEASES-OTHER DEBT PRINCIPAL			1,170.17
	6-1100-472-00-000-000-0-864	CAPITAL LEASES-OTHER DEBT INTEREST			27.19
27	6-1100-412-00-090-001-0-780	DIST CLERK-CAPITAL LEASES	'14 LEASE	C85031933	(1,197.36)
	6-1100-471-00-000-000-0-862	CAPITAL LEASES-OTHER DEBT PRINCIPAL			2,540.35
	6-1100-472-00-000-000-0-864	CAPITAL LEASES-OTHER DEBT INTEREST			59.01
28	6-1100-412-00-090-001-0-780	DIST CLERK-CAPITAL LEASES	'14 LEASE	C85031934	(2,599.36)
	6-1100-471-00-000-000-0-862	CAPITAL LEASES-OTHER DEBT PRINCIPAL			1,360.24
	6-1100-472-00-000-000-0-864	CAPITAL LEASES-OTHER DEBT INTEREST			31.60
29	6-1100-412-00-090-001-0-780	DIST CLERK-CAPITAL LEASES	'14 LEASE	C85031938	(1,391.84)
	6-1100-471-00-000-000-0-862	CAPITAL LEASES-OTHER DEBT PRINCIPAL			1,877.88
	6-1100-472-00-000-000-0-864	CAPITAL LEASES-OTHER DEBT INTEREST			43.64
30	6-1100-412-00-090-001-0-780	DIST CLERK-CAPITAL LEASES	'14 LEASE	C85032674	(1,921.52)
	6-1100-471-00-000-000-0-862	CAPITAL LEASES-OTHER DEBT PRINCIPAL			1,857.76
	6-1100-472-00-000-000-0-864	CAPITAL LEASES-OTHER DEBT INTEREST			56.02
31	6-1100-415-15-115-001-0-780	DBM-BUDGET DIV-CAPITAL LEASES	'14 LEASE	C85042528	(1,913.78)
	6-1200-471-00-000-000-0-862	CAPITAL LEASES-OTHER DEBT PRINCIPAL			2,451.78
	6-1200-472-00-000-000-0-864	CAPITAL LEASES-OTHER DEBT INTEREST			77.34
32	6-1200-431-00-122-005-0-780	PCT2 ADM-CAPITAL LEASES	'14 LEASE	JWH 16176	(2,529.12)
	6-1100-471-00-000-000-0-862	CAPITAL LEASES-OTHER DEBT PRINCIPAL			1,515.31
	6-1100-472-00-000-000-0-864	CAPITAL LEASES-OTHER DEBT INTEREST			47.81
33	6-1100-466-00-122-082-0-780	PCT2 CRC-ALAMO-CAPITAL LEASES	'14 LEASE	LYD 50589	(1,563.12)
	6-1100-471-00-000-000-0-862	CAPITAL LEASES-OTHER DEBT PRINCIPAL			1,955.17
	6-1100-472-00-000-000-0-864	CAPITAL LEASES-OTHER DEBT INTEREST			78.11
34	6-1100-419-50-125-003-0-780	SAFETY-CAPITAL LEASES	'14 LEASE	C85051574	(2,033.28)
	6-1100-471-00-000-000-0-862	CAPITAL LEASES-OTHER DEBT PRINCIPAL			29,044.73
	6-1100-472-00-000-000-0-864	CAPITAL LEASES-OTHER DEBT INTEREST		PITNEY BOWES	2,839.27
35	6-1100-415-15-140-001-0-780	TAX OFF-CAPITAL LEASES	'14 LEASE	LEASE# 2355719	(31,884.00)
	6-1100-471-00-000-000-0-862	CAPITAL LEASES-OTHER DEBT PRINCIPAL			807.72
	6-1100-472-00-000-000-0-864	CAPITAL LEASES-OTHER DEBT INTEREST			21.00
36	6-1100-415-15-140-001-0-780	TAX OFF-CAPITAL LEASES	'14 LEASE	C85039130	(828.72)
	6-1100-471-00-000-000-0-862	CAPITAL LEASES-OTHER DEBT PRINCIPAL			1,885.61
	6-1100-472-00-000-000-0-864	CAPITAL LEASES-OTHER DEBT INTEREST			70.03
37	6-1100-415-15-140-001-0-780	TAX OFF-CAPITAL LEASES	'14 LEASE	C85048957	(1,955.64)
	6-1100-471-00-000-000-0-862	CAPITAL LEASES-OTHER DEBT PRINCIPAL			2,262.78
	6-1100-472-00-000-000-0-864	CAPITAL LEASES-OTHER DEBT INTEREST			84.06
38	6-1100-415-15-140-001-0-780	TAX OFF-CAPITAL LEASES	'14 LEASE	C85050070	(2,346.84)
	6-1100-471-00-000-000-0-862	CAPITAL LEASES-OTHER DEBT PRINCIPAL			1,170.33
	6-1100-472-00-000-000-0-864	CAPITAL LEASES-OTHER DEBT INTEREST			43.47
39	6-1100-415-15-140-001-0-780	TAX OFF-CAPITAL LEASES	'14 LEASE	C85050267	(1,213.80)
	6-1100-471-00-000-000-0-862	CAPITAL LEASES-OTHER DEBT PRINCIPAL			1,266.15
	6-1100-472-00-000-000-0-864	CAPITAL LEASES-OTHER DEBT INTEREST			48.80
40	6-1100-415-15-140-001-0-780	TAX OFF-CAPITAL LEASES	'14 LEASE	C85050268	(1,314.95)
	6-1100-471-00-000-000-0-862	CAPITAL LEASES-OTHER DEBT PRINCIPAL			834.61
	6-1100-472-00-000-000-0-864	CAPITAL LEASES-OTHER DEBT INTEREST			33.35
41	6-1100-415-15-140-001-0-780	TAX OFF-CAPITAL LEASES	'14 LEASE	S9048700019	(867.96)

	ACCOUNT NAME	ACCOUNT NAME		AMOUNT
	6-1100-471-00-000-000-0-862	CAPITAL LEASES-OTHER DEBT PRINCIPAL		763.38
	6-1100-472-00-000-000-0-864	CAPITAL LEASES-OTHER DEBT INTEREST	3229343	26.22
42	6-1100-415-15-140-001-0-780	TAX OFF-CAPITAL LEASES '14 LEASE	S9048700924	(789.60)
	6-1100-471-00-000-000-0-862	CAPITAL LEASES-OTHER DEBT PRINCIPAL		973.73
	6-1100-472-00-000-000-0-864	CAPITAL LEASES-OTHER DEBT INTEREST	3229334	38.89
43	6-1100-415-15-140-001-0-780	TAX OFF-CAPITAL LEASES '14 LEASE	S9048701021	(1,012.62)
	6-1100-471-00-000-000-0-862	CAPITAL LEASES-OTHER DEBT PRINCIPAL		2,431.56
	6-1100-472-00-000-000-0-864	CAPITAL LEASES-OTHER DEBT INTEREST		177.02
44	6-1100-415-18-160-001-0-780	PURCHASING-CAPITAL LEASES '14 LEASE	C85049492	(2,608.58)
	6-1237-471-00-000-000-0-862	CAPITAL LEASES-OTHER DEBT PRINCIPAL		2,784.27
	6-1237-472-00-000-000-0-864	CAPITAL LEASES-OTHER DEBT INTEREST		72.33
45	6-1237-415-40-180-003-0-780	CC REC MGMT-CAPITAL LEASES '14 LEASE	53AA3807N22V	(2,856.60)
	6-1100-471-00-000-000-0-862	CAPITAL LEASES-OTHER DEBT PRINCIPAL		1,845.13
	6-1100-472-00-000-000-0-864	CAPITAL LEASES-OTHER DEBT INTEREST		84.11
46	6-1100-415-50-190-002-0-780	HUMAN RESOURCES-CAPITAL LEASE! '14 LEASE	C85058683	(1,929.24)
	6-1100-471-00-000-000-0-862	CAPITAL LEASES-OTHER DEBT PRINCIPAL		1,855.55
	6-1100-472-00-000-000-0-864	CAPITAL LEASES-OTHER DEBT INTEREST		63.73
47	6-1100-415-00-200-001-0-780	INFO TECH DEPT-CAPITAL LEASES '14 LEASE (revised)	C85047034	(1,919.28)
	6-1100-471-00-000-000-0-862	CAPITAL LEASES-OTHER DEBT PRINCIPAL		1,832.11
	6-1100-472-00-000-000-0-864	CAPITAL LEASES-OTHER DEBT INTEREST		42.53
48	6-1100-419-40-220-001-0-780	FACILITIES MGMT-CAPITAL LEASES '14 LEASE	C85037342	(1,874.64)
	6-1252-471-00-000-000-0-862	CAPITAL LEASES-OTHER DEBT PRINCIPAL		2,831.86
	6-1252-472-00-000-000-0-864	CAPITAL LEASES-OTHER DEBT INTEREST		109.13
49	6-1252-412-00-270-012-0-780	HIDTA FED SHRG-USDJ-CAPITAL LEAS '14 LEASE	RRB 05644	(2,940.99)
	6-1100-471-00-000-000-0-862	CAPITAL LEASES-OTHER DEBT PRINCIPAL		1,578.42
	6-1100-472-00-000-000-0-864	CAPITAL LEASES-OTHER DEBT INTEREST		103.50
50	6-1100-421-00-280-001-0-780	SHERIFF-CAPITAL LEASES '14 LEASE	EX7004993	(1,681.92)
	6-1100-471-00-000-000-0-862	CAPITAL LEASES-OTHER DEBT PRINCIPAL		1,578.42
	6-1100-472-00-000-000-0-864	CAPITAL LEASES-OTHER DEBT INTEREST		103.50
51	6-1100-421-00-280-001-0-780	SHERIFF-CAPITAL LEASES '14 LEASE	EX7409408	(1,681.92)
	6-1100-471-00-000-000-0-862	CAPITAL LEASES-OTHER DEBT PRINCIPAL		1,578.42
	6-1100-472-00-000-000-0-864	CAPITAL LEASES-OTHER DEBT INTEREST		103.50
52	6-1100-421-00-280-001-0-780	SHERIFF-CAPITAL LEASES '14 LEASE	EX7419602	(1,681.92)
	6-1100-471-00-000-000-0-862	CAPITAL LEASES-OTHER DEBT PRINCIPAL		2,083.15
	6-1100-472-00-000-000-0-864	CAPITAL LEASES-OTHER DEBT INTEREST		136.61
53	6-1100-421-00-280-001-0-780	SHERIFF-CAPITAL LEASES '14 LEASE	EX9292939	(2,219.76)
	6-1100-471-00-000-000-0-862	CAPITAL LEASES-OTHER DEBT PRINCIPAL		2,083.15
	6-1100-472-00-000-000-0-864	CAPITAL LEASES-OTHER DEBT INTEREST		136.61
54	6-1100-421-00-280-001-0-780	SHERIFF-CAPITAL LEASES '14 LEASE	EX9292991	(2,219.76)
	6-1100-471-00-000-000-0-862	CAPITAL LEASES-OTHER DEBT PRINCIPAL		2,083.15
	6-1100-472-00-000-000-0-864	CAPITAL LEASES-OTHER DEBT INTEREST		136.61
55	6-1100-421-00-280-001-0-780	SHERIFF-CAPITAL LEASES '14 LEASE	EX9292993	(2,219.76)

	ACCOUNT NAME	ACCOUNT NAME		AMOUNT
	6-1100-471-00-000-000-0-862	CAPITAL LEASES-OTHER DEBT PRINCIPAL		360.66
	6-1100-472-00-000-000-0-864	CAPITAL LEASES-OTHER DEBT INTEREST		25.22
56	6-1100-423-21-280-002-0-780	JAIL-CAPITAL LEASES '14 LEASE	A2T194562	(385.88)
	6-1100-471-00-000-000-0-862	CAPITAL LEASES-OTHER DEBT PRINCIPAL		1,441.02
	6-1100-472-00-000-000-0-864	CAPITAL LEASES-OTHER DEBT INTEREST		100.74
57	6-1100-423-21-280-002-0-780	JAIL-CAPITAL LEASES '14 LEASE	EX7418566	(1,541.76)
	6-1100-471-00-000-000-0-862	CAPITAL LEASES-OTHER DEBT PRINCIPAL		1,441.02
	6-1100-472-00-000-000-0-864	CAPITAL LEASES-OTHER DEBT INTEREST		100.74
58	6-1100-423-21-280-002-0-780	JAIL-CAPITAL LEASES '14 LEASE	EX7418664	(1,541.76)
	6-1100-471-00-000-000-0-862	CAPITAL LEASES-OTHER DEBT PRINCIPAL		1,441.02
	6-1100-472-00-000-000-0-864	CAPITAL LEASES-OTHER DEBT INTEREST		100.74
59	6-1100-423-21-280-002-0-780	JAIL-CAPITAL LEASES '14 LEASE	EX7418776	(1,541.76)
	6-1100-471-00-000-000-0-862	CAPITAL LEASES-OTHER DEBT PRINCIPAL		1,441.02
	6-1100-472-00-000-000-0-864	CAPITAL LEASES-OTHER DEBT INTEREST		100.74
60	6-1100-423-21-280-002-0-780	JAIL-CAPITAL LEASES '14 LEASE	EX7419532	(1,541.76)
	6-1100-471-00-000-000-0-862	CAPITAL LEASES-OTHER DEBT PRINCIPAL		1,441.02
	6-1100-472-00-000-000-0-864	CAPITAL LEASES-OTHER DEBT INTEREST		100.74
61	6-1100-423-21-280-002-0-780	JAIL-CAPITAL LEASES '14 LEASE	EX7419553	(1,541.76)
	6-1100-471-00-000-000-0-862	CAPITAL LEASES-OTHER DEBT PRINCIPAL		1,441.02
	6-1100-472-00-000-000-0-864	CAPITAL LEASES-OTHER DEBT INTEREST		100.74
62	6-1100-423-21-280-002-0-780	JAIL-CAPITAL LEASES '14 LEASE	EX7420399	(1,541.76)
	6-1100-471-00-000-000-0-862	CAPITAL LEASES-OTHER DEBT PRINCIPAL		1,439.70
	6-1100-472-00-000-000-0-864	CAPITAL LEASES-OTHER DEBT INTEREST		94.38
63	6-1100-421-00-292-001-0-780	CONSTABLE PCT.2-CAPITAL LEASE '14 LEASE (revised)	C85044985	(1,534.08)
	6-1100-471-00-000-000-0-862	CAPITAL LEASES-OTHER DEBT PRINCIPAL		1,257.02
	6-1100-472-00-000-000-0-864	CAPITAL LEASES-OTHER DEBT INTEREST		43.18
64	6-1100-421-00-293-001-0-780	CONSTABLE PCT.3-CAPITAL LEASES '14 LEASE	C85048068	(1,300.20)
	6-1100-471-00-000-000-0-862	CAPITAL LEASES-OTHER DEBT PRINCIPAL		2,050.54
	6-1100-472-00-000-000-0-864	CAPITAL LEASES-OTHER DEBT INTEREST		93.50
65	6-1100-422-10-300-001-0-780	FIRE MARSHAL-CAPITAL LEASES '14 LEASE	C85057181	(2,144.04)
	6-1100-471-00-000-000-0-862	CAPITAL LEASES-OTHER DEBT PRINCIPAL		790.43
	6-1100-472-00-000-000-0-864	CAPITAL LEASES-OTHER DEBT INTEREST		38.29
66	6-1100-422-10-300-001-0-780	FIRE MARSHAL-CAPITAL LEASES '14 LEASE	S9048500394	(828.72)
	6-1100-471-00-000-000-0-862	CAPITAL LEASES-OTHER DEBT PRINCIPAL		27,335.30
	6-1100-472-00-000-000-0-864	CAPITAL LEASES-OTHER DEBT INTEREST		862.30
67	6-1100-441-00-340-003-0-780	HEALTH CLINICS-CAPITAL LEASES '14 LEASE	10 COPIERS	(28,197.60)
	6-1100-471-00-000-000-0-862	CAPITAL LEASES-OTHER DEBT PRINCIPAL		2,450.71
	6-1100-472-00-000-000-0-864	CAPITAL LEASES-OTHER DEBT INTEREST		77.33
68	6-1100-441-00-340-003-0-780	HEALTH CLINICS-CAPITAL LEASES '14 LEASE	C85045966	(2,528.04)
	6-1293-471-00-340-013-6-862	CAPITAL LEASES-OTHER DEBT PRINCIPAL		3,383.18
	6-1293-472-00-340-013-6-864	CAPITAL LEASES-OTHER DEBT INTEREST		221.86
69	6-1293-441-10-340-013-6-780	CPS/HAZARDS-CAPITAL LEASES '14 LEASE	C85046271	(3,605.04)

	ACCOUNT NAME	ACCOUNT NAME			AMOUNT
	6-1292-471-00-350-001-6-862	CAPITAL LEASES-OTHER DEBT PRINCIPAL			4,313.98
	6-1292-472-00-350-001-6-864	CAPITAL LEASES-OTHER DEBT INTEREST			166.40
	6-1292-441-00-350-001-6-780	WIC ADM-CAPITAL LEASES			(4,480.38)
	6-1292-471-00-350-001-7-862	CAPITAL LEASES-OTHER DEBT PRINCIPAL			1,461.48
	6-1292-472-00-350-001-7-864	CAPITAL LEASES-OTHER DEBT INTEREST			31.98
70	6-1292-441-00-350-001-7-780	WIC ADM-CAPITAL LEASES	'14 LEASE	2 COPIERS	(1,493.46)
	6-1100-471-00-000-000-0-862	CAPITAL LEASES-OTHER DEBT PRINCIPAL			683.69
	6-1100-472-00-000-000-0-864	CAPITAL LEASES-OTHER DEBT INTEREST			4.63
71	6-1100-412-00-006-001-0-780	332ND DC-CAPITAL LEASES	'13 LEASE	EX7-384130	(688.32)
	6-1100-471-00-000-000-0-862	CAPITAL LEASES-OTHER DEBT PRINCIPAL			1,241.51
	6-1100-472-00-000-000-0-864	CAPITAL LEASES-OTHER DEBT INTEREST			9.84
72	6-1100-412-00-008-001-0-780	389TH DC-CAPITAL LEASES	'13 LEASE (revised)	XDC-400520	(1,251.35)
	6-1100-471-00-000-000-0-862	CAPITAL LEASES-OTHER DEBT PRINCIPAL			1,622.64
	6-1100-472-00-000-000-0-864	CAPITAL LEASES-OTHER DEBT INTEREST			15.42
73	6-1100-412-00-022-001-0-780	CCL#2-CAPITAL LEASES	'13 LEASE	MX1-184485	(1,638.06)
	6-1100-471-00-000-000-0-862	CAPITAL LEASES-OTHER DEBT PRINCIPAL			355.72
	6-1100-472-00-000-000-0-864	CAPITAL LEASES-OTHER DEBT INTEREST			1.44
74	6-1100-412-00-045-001-0-780	AUXILIARY CRT-CAPITAL LEASES	'13 LEASE	XEH-074669	(357.16)
	6-1100-471-00-000-000-0-862	CAPITAL LEASES-OTHER DEBT PRINCIPAL			1,154.00
	6-1100-472-00-000-000-0-864	CAPITAL LEASES-OTHER DEBT INTEREST			12.55
75	6-1100-412-00-055-001-0-780	CHILD PROTECTION CRT-CAPITAL LE	'13 LEASE	EX7-386328	(1,166.55)
	6-1200-471-00-122-000-0-862	CAPITAL LEASES-OTHER DEBT PRINCIPAL			551.21
	6-1200-472-00-122-000-0-864	CAPITAL LEASES-OTHER DEBT INTEREST			5.99
76	6-1200-431-00-122-005-0-780	PCT2 ADM-CAPITAL LEASES	'13 LEASE	FRU87557	(557.20)
	6-1200-471-00-122-000-0-862	CAPITAL LEASES-OTHER DEBT PRINCIPAL			900.27
	6-1200-472-00-122-000-0-864	CAPITAL LEASES-OTHER DEBT INTEREST			11.01
77	6-1200-431-00-122-005-0-780	PCT2 ADM-CAPITAL LEASES	'13 LEASE	HRQ10062	(911.28)
	6-1200-471-00-122-000-0-862	CAPITAL LEASES-OTHER DEBT PRINCIPAL			925.19
	6-1200-472-00-122-000-0-864	CAPITAL LEASES-OTHER DEBT INTEREST			76.81
78	6-1200-431-00-122-005-0-780	PCT2 ADM-CAPITAL LEASES	'13 LEASE	LYA-03876	(1,002.00)
	6-1200-471-00-124-000-0-862	CAPITAL LEASES-OTHER DEBT PRINCIPAL			1,441.65
	6-1200-472-00-124-000-0-864	CAPITAL LEASES-OTHER DEBT INTEREST			19.59
79	6-1200-431-00-124-005-0-780	PCT4 ADM-CAPITAL LEASES	'13 LEASE	AE9-896454	(1,461.24)
	6-1100-471-00-000-000-0-862	CAPITAL LEASES-OTHER DEBT PRINCIPAL			2,457.15
	6-1100-472-00-000-000-0-864	CAPITAL LEASES-OTHER DEBT INTEREST			20.00
80	6-1100-413-00-125-001-0-780	EXECUTIVE OFFICE-CAPITAL LEASES	'13 LEASE	MX4-318178	(2,477.15)
	6-1100-471-00-000-000-0-862	CAPITAL LEASES-OTHER DEBT PRINCIPAL		EX9-286962-old	4,015.90
	6-1100-472-00-000-000-0-864	CAPITAL LEASES-OTHER DEBT INTEREST		EX9-282399-prvs	65.54
81	6-1100-414-00-130-001-0-780	ELECTIONS DEPT-CAPITAL LEASES	'13 LEASE	EX9-294148	(4,081.44)
	6-1100-471-00-000-000-0-862	CAPITAL LEASES-OTHER DEBT PRINCIPAL			1,980.13
	6-1100-472-00-000-000-0-864	CAPITAL LEASES-OTHER DEBT INTEREST			32.32
82	6-1100-415-15-140-001-0-780	TAX OFF-CAPITAL LEASES	'13 LEASE (revised)	EX7-401140	(2,012.45)
	6-1100-471-00-000-000-0-862	CAPITAL LEASES-OTHER DEBT PRINCIPAL			1,980.13
	6-1100-472-00-000-000-0-864	CAPITAL LEASES-OTHER DEBT INTEREST			32.32
83	6-1100-415-15-140-001-0-780	TAX OFF-CAPITAL LEASES	'13 LEASE (revised)	EX7-401158	(2,012.45)
	6-1100-471-00-000-000-0-862	CAPITAL LEASES-OTHER DEBT PRINCIPAL			1,980.13
	6-1100-472-00-000-000-0-864	CAPITAL LEASES-OTHER DEBT INTEREST			32.32
84	6-1100-415-15-140-001-0-780	TAX OFF-CAPITAL LEASES	'13 LEASE (revised)	EX7-401319	(2,012.45)

	ACCOUNT NAME	ACCOUNT NAME			AMOUNT
	6-1100-471-00-000-000-0-862	CAPITAL LEASES-OTHER DEBT PRINCIPAL			1,980.13
	6-1100-472-00-000-000-0-864	CAPITAL LEASES-OTHER DEBT INTEREST			32.32
85	6-1100-415-15-140-001-0-780	TAX OFF-CAPITAL LEASES	'13 LEASE (revised)	EX7-401556	(2,012.45)
	6-1100-471-00-000-000-0-862	CAPITAL LEASES-OTHER DEBT PRINCIPAL			178.11
	6-1100-472-00-000-000-0-864	CAPITAL LEASES-OTHER DEBT INTEREST			0.48
86	6-1100-415-16-150-001-0-780	CO TREASURER-CAPITAL LEASES	'13 LEASE	XEH-071727	(178.59)
	6-1100-471-00-000-000-0-862	CAPITAL LEASES-OTHER DEBT PRINCIPAL			532.89
	6-1100-472-00-000-000-0-864	CAPITAL LEASES-OTHER DEBT INTEREST			2.88
87	6-1100-415-21-170-001-0-780	CO AUDITOR-CAPITAL LEASES	'13 LEASE	XEH-077223	(535.77)
	6-1100-471-00-000-000-0-862	CAPITAL LEASES-OTHER DEBT PRINCIPAL			532.89
	6-1100-472-00-000-000-0-864	CAPITAL LEASES-OTHER DEBT INTEREST			2.88
88	6-1100-415-21-170-001-0-780	CO AUDITOR-CAPITAL LEASES	'13 LEASE	XEH-077285	(535.77)
	6-1100-471-00-000-000-0-862	CAPITAL LEASES-OTHER DEBT PRINCIPAL			869.57
	6-1100-472-00-000-000-0-864	CAPITAL LEASES-OTHER DEBT INTEREST			4.72
89	6-1100-415-21-170-001-0-780	CO AUDITOR-CAPITAL LEASES	'13 LEASE	XKK-422203	(874.29)
	6-1100-471-00-000-000-0-862	CAPITAL LEASES-OTHER DEBT PRINCIPAL			621.37
	6-1100-472-00-000-000-0-864	CAPITAL LEASES-OTHER DEBT INTEREST			8.45
90	6-1100-415-40-180-001-0-780	CO CLERK-CAPITAL LEASES	'13 LEASE	C85027808	(629.82)
	6-1100-471-00-000-000-0-862	CAPITAL LEASES-OTHER DEBT PRINCIPAL			689.48
	6-1100-472-00-000-000-0-864	CAPITAL LEASES-OTHER DEBT INTEREST			10.32
91	6-1100-415-40-180-001-0-780	CO CLERK-CAPITAL LEASES	'13 LEASE	C85028015	(699.80)
	6-1100-471-00-000-000-0-862	CAPITAL LEASES-OTHER DEBT PRINCIPAL			1,177.25
	6-1100-472-00-000-000-0-864	CAPITAL LEASES-OTHER DEBT INTEREST			19.22
92	6-1100-415-40-180-001-0-780	CO CLERK-CAPITAL LEASES	'13 LEASE	C85028197	(1,196.47)
	6-1100-471-00-000-000-0-862	CAPITAL LEASES-OTHER DEBT PRINCIPAL			1,836.23
	6-1100-472-00-000-000-0-864	CAPITAL LEASES-OTHER DEBT INTEREST			27.47
93	6-1100-415-40-180-001-0-780	CO CLERK-CAPITAL LEASES	'13 LEASE	C85028451	(1,863.70)
	6-1100-471-00-000-000-0-862	CAPITAL LEASES-OTHER DEBT PRINCIPAL			2,017.14
	6-1100-472-00-000-000-0-864	CAPITAL LEASES-OTHER DEBT INTEREST			32.93
94	6-1100-415-40-180-001-0-780	CO CLERK-CAPITAL LEASES	'13 LEASE	C85028452	(2,050.07)
	6-1237-471-00-000-000-0-862	CAPITAL LEASES-OTHER DEBT PRINCIPAL			2,017.14
	6-1237-472-00-000-000-0-864	CAPITAL LEASES-OTHER DEBT INTEREST			32.93
95	6-1237-415-40-180-003-0-780	CC REC MGMT-CAPITAL LEASES	'13 LEASE	C85028052	(2,050.07)
	6-1237-471-00-000-000-0-862	CAPITAL LEASES-OTHER DEBT PRINCIPAL			1,836.23
	6-1237-472-00-000-000-0-864	CAPITAL LEASES-OTHER DEBT INTEREST			27.47
96	6-1237-415-40-180-003-0-780	CC REC MGMT-CAPITAL LEASES	'13 LEASE	C85028450	(1,863.70)
	6-1100-471-00-000-000-0-862	CAPITAL LEASES-OTHER DEBT PRINCIPAL			1,759.60
	6-1100-472-00-000-000-0-864	CAPITAL LEASES-OTHER DEBT INTEREST			26.30
97	6-1100-421-00-280-001-0-780	SHERIFF-CAPITAL LEASES	'13 LEASE	EX7-393320	(1,785.90)
	6-1100-471-00-000-000-0-862	CAPITAL LEASES-OTHER DEBT PRINCIPAL			1,759.60
	6-1100-472-00-000-000-0-864	CAPITAL LEASES-OTHER DEBT INTEREST			26.30
98	6-1100-421-00-280-001-0-780	SHERIFF-CAPITAL LEASES	'13 LEASE	EX7-398378	(1,785.90)
	6-1100-471-00-000-000-0-862	CAPITAL LEASES-OTHER DEBT PRINCIPAL			3,057.37
	6-1100-472-00-000-000-0-864	CAPITAL LEASES-OTHER DEBT INTEREST			45.73
99	6-1100-421-00-280-001-0-780	SHERIFF-CAPITAL LEASES	'13 LEASE	EX9-286496	(3,103.10)
	6-1100-471-00-000-000-0-862	CAPITAL LEASES-OTHER DEBT PRINCIPAL		PAID IN PD1-7	729,856.00
	6-1100-472-00-000-000-0-864	CAPITAL LEASES-OTHER DEBT INTEREST			55,751.06
100	6-1100-421-00-280-083-0-780	JAIL-CAPITAL LEASES	'13 LEASE	system comm	(785,607.06)

	ACCOUNT NAME	ACCOUNT NAME		AMOUNT
	6-1292-471-00-350-001-6-862	CAPITAL LEASES-OTHER DEBT PRINCIPAL		4,344.48
	6-1292-472-00-350-001-6-864	CAPITAL LEASES-OTHER DEBT INTEREST		284.76
	6-1292-441-00-350-001-6-780	WIC ADM-CAPITAL LEASES '13 LEASE		(4,629.24)
	6-1292-471-00-350-001-7-862	CAPITAL LEASES-OTHER DEBT PRINCIPAL		1,463.84
	6-1292-472-00-350-001-7-864	CAPITAL LEASES-OTHER DEBT INTEREST		79.24
101	6-1292-441-00-350-001-7-780	WIC ADM-CAPITAL LEASES '13 LEASE	28 COPIERS	(1,543.08)
	6-1247-471-00-000-000-0-862	CAPITAL LEASES-OTHER DEBT PRINCIPAL		956.72
	6-1247-472-00-000-000-0-864	CAPITAL LEASES-OTHER DEBT INTEREST		10.40
102	6-1247-412-50-100-001-0-780	LAW LIBRARY-CAPITAL LEASES '12 LEASE	DGA-32126	(967.12)
	6-1100-471-00-000-000-0-862	CAPITAL LEASES-OTHER DEBT PRINCIPAL		1,336.48
	6-1100-472-00-000-000-0-864	CAPITAL LEASES-OTHER DEBT INTEREST		7.25
103	6-1100-415-18-160-001-0-780	PURCHASING-CAPITAL LEASES '12 LEASE	XKP-065112	(1,343.73)
	6-1100-471-00-000-000-0-862	CAPITAL LEASES-OTHER DEBT PRINCIPAL		2,243.15
	6-1100-472-00-000-000-0-864	CAPITAL LEASES-OTHER DEBT INTEREST		33.55
104	6-1100-421-00-294-001-0-780	CONSTABLE PCT.4-CAPITAL LEASES '12 LEASE	XKK-415666	(2,276.70)
	6-1100-471-00-000-000-0-862	CAPITAL LEASES-OTHER DEBT PRINCIPAL		3,430.50
	6-1100-472-00-000-000-0-864	CAPITAL LEASES-OTHER DEBT INTEREST		23.26
105	6-1100-441-00-340-001-0-780	HEALTH ADM-CAPITAL LEASES '12 LEASE	RFX-353771	(3,453.76)
	TOTALS:			-

Total Principal	1,195,329.55
Total Interest	96,491.55
	1,291,821.10

COMMENTS:
Period 1-13

TRANSFER NEEDED FOR PAYMENT OF CAPITAL LEASES

DEPARTMENT HEAD SIGNATURE

APPROVED COMMISSIONERS' COURT ___/___/___ DATE ATTEST COUNTY CLERK

DATE: March 25, 2017

DEPARTMENT HEAD: RAY EUFRACIO, CPA, HIDALGO COUNTY AUDITOR
DEPARTMENT NAME: HIDALGO COUNTY AUDITOR'S OFFICE
PREPARED BY: Valeria Rios
ACCOUNT NUMBER: 6-1292-XXX-XX-350-001-X-XXX

SUBJECT: Interfund transfer(s) (Increases(decrease)) in Accordance with Local Government Code, Chapter 111, Subchapter C

Honorable Commissioners' Court of Hidalgo County:

I would like to request the following amendments (increases) to the budget in accordance with Local Government Code, Chapter 111, Subchapter C.

	INCREASE ACCOUNT NUMBER(S)	ACCOUNT NAME		AMOUNT
B.1	6-1292-471-00-350-001-6-862	CAPITAL LEASES-OTHER DEBT PRINCIPAL	Dr.Jcksn C-12-052-06-26	22,038.10
	6-1292-472-00-350-001-6-864	CAPITAL LEASES-OTHER DEBT INTEREST		911.90
	6-1292-441-00-350-001-6-780	WIC ADM-LAND & BLDG RENTALS '12LEASE		(22,950.00)
	6-1292-471-00-350-001-7-862	CAPITAL LEASES-OTHER DEBT PRINCIPAL	Dr.Jcksn C-12-052-06-26	7,466.05
	6-1292-472-00-350-001-7-864	CAPITAL LEASES-OTHER DEBT INTEREST		183.95
	6-1292-441-00-350-001-7-780	WIC ADM-LAND & BLDG RENTALS '12LEASE		(7,650.00)
B.2	6-1292-471-00-350-001-6-862	CAPITAL LEASES-OTHER DEBT PRINCIPAL	GBB-WSLCO C-12-104-08-28	26,598.04
	6-1292-472-00-350-001-6-864	CAPITAL LEASES-OTHER DEBT INTEREST		1,326.26
	6-1292-441-00-350-001-6-780	WIC ADM-LAND & BLDG RENTALS '12 LEASE		(27,924.30)
	6-1292-471-00-350-001-7-862	CAPITAL LEASES-OTHER DEBT PRINCIPAL	GBB-WSLCO C-12-104-08-28	9,010.87
	6-1292-472-00-350-001-7-864	CAPITAL LEASES-OTHER DEBT INTEREST		297.23
	6-1292-441-00-350-001-7-780	WIC ADM-LAND & BLDG RENTALS '12 LEASE		(9,308.10)
B.3	6-1292-471-00-350-001-6-862	CPTL LEASES-OTHR DEBT PRINCIPAL	SPI VENTURES C-11-114A-09-06	54,496.84
	6-1292-472-00-350-001-6-864	CAPITAL LEASES-OTHER DEBT INTEREST		1,190.66
	6-1292-441-00-350-001-6-780	WIC ADM-LAND & BLDG RENTALS		(55,687.50)
	6-1292-471-00-350-001-7-862	CPTL LEASES-OTHR DEBT PRINCIPAL	SPI VENTURES C-11-114A-09-06	18,462.41
	6-1292-472-00-350-001-7-864	CAPITAL LEASES-OTHER DEBT INTEREST		100.09
	6-1292-441-00-350-001-7-780	WIC ADM-LAND & BLDG RENTALS		(18,562.50)
B.4	6-1292-471-00-350-001-6-862	CPTL LEASES-OTHR DEBT PRINCIPAL	JOSE RMZ-ROMA C-13-213-01-14	6,489.97
	6-1292-472-00-350-001-6-864	CAPITAL LEASES-OTHER DEBT INTEREST		14,312.63
	6-1292-441-00-350-001-6-780	WIC ADM-LAND & BLDG RENTALS		(20,802.60)
	6-1292-471-00-350-001-7-862	CPTL LEASES-OTHR DEBT PRINCIPAL	JOSE RMZ-ROMA C-13-213-01-14	2,606.70
	6-1292-472-00-350-001-7-864	CAPITAL LEASES-OTHER DEBT INTEREST		4,327.50
	6-1292-441-00-350-001-7-780	WIC ADM-LAND & BLDG RENTALS		(6,934.20)
		TOTAL BUDGET INCREASE REQUEST		-
			Total Principal	147,168.98
		TRANSFER NEEDED FOR PAYMENT OF CAPITAL LEASES-BUILDINGS	Total Interest	22,650.22
				169,819.20

DEPARTMENT HEAD SIGNATURE

APPROVED COMMISSIONERS' COURT ___/___/___ DATE ATTEST COUNTY CLERK

DATE: March 27, 2017

DEPARTMENT HEAD: Raymundo Eufracio, CPA

DEPARTMENT NAME: Hidalgo County Auditor's Office

ACCOUNT NUMBER: 6-1292-441-00-350-001-X-XXX

SUBJECT: Budget Line-Item Transfer (s)

Honorable Commissioners' Court of Hidalgo County:

I submit to you for your consideration the following line-item transfers in accordance with Local Government Code, Chapter 111, Subchapter C.:

FROM		TO		
ACCOUNT NUMBER	ACCOUNT (OBJECT) NAME	ACCOUNT NUMBER	ACCOUNT (OBJECT) NAME	AMOUNT
6-1292-441-00-350-001-6-441	WIC ADM-LAND & BLDG RENTALS	6-1292-441-00-350-001-6-780	WIC ADM-CAPITAL LEASES	20,802.60
6-1292-441-00-350-001-7-441	WIC ADM-LAND & BLDG RENT	6-1292-441-00-350-001-7-780	WIC ADM-CAPITAL LEASES	6,934.20
	TOTAL			27,736.80

REASON:

Funds needed to reclassify corrections for 2016 expenditures. (buildings)

DEPARTMENT HEAD SIGNATURE

APPROVED COMMISSIONERS' COURT **DATE** **ATTEST COUNTY CLERK**

COUNTY AUDITOR'S FORM: ARS-CA-017
REVISED: 02/11/2003

DATE: May 2, 2017

DEPARTMENT HEAD: Raymunda Eufracio, CPA

DEPARTMENT NAME: Hidalgo County Auditor's Office

ACCOUNT NUMBER: 6-XXXX-XXX-XX-XXX-XXX-X-XXX

PREPARED BY: Valeria I. Rios VR

APPROVED BY:

SUBJECT: Budget Line-Item Transfer (s)

Honorable Commissioners' Court of Hidalgo County:

I submit to you for your consideration the following line-item transfers in accordance with Local Government Code, Chapter 111, Subchapter C.:

	FROM		TO		
	ACCOUNT NUMBER	ACCOUNT (OBJECT) NAME	ACCOUNT NUMBER	ACCOUNT (OBJECT) NAME	AMOUNT
R1	6-1100-412-00-003-001-0-780	139TH DC-CAPITAL LEASES	6-1100-412-00-003-001-0-442	139TH DC-EQUIP & VEHICLE RENT	423.68
R2	6-1100-412-00-008-001-0-780	389TH DC-CAPITAL LEASES	6-1100-412-00-008-001-0-350	389TH DC-OTHER SRV	88.45
R3	6-1100-412-00-009-001-0-780	398TH DC-CAPITAL LEASES	6-1100-412-00-009-001-0-442	398TH DC-EQUIP & VEHICLE RENTALS	1,167.50
R3	6-1100-412-00-009-001-0-780	398TH DC-CAPITAL LEASES	6-1100-412-00-009-001-0-350	398TH DC-OTHER SRV	90.85
R4	6-1100-412-00-025-001-0-780	CCL#5-CAPITAL LEASES	6-1100-412-00-025-001-0-442	CCL#5-EQUIP & VEHICLE RENT	387.20
R4	6-1100-412-00-025-001-0-780	CCL#5-CAPITAL LEASES	6-1100-412-00-025-001-0-350	CCL#5-OTHER SERVICES	48.20
R5	6-1100-412-00-026-001-0-780	CCL#6-CAPITAL LEASES	6-1100-412-00-026-001-0-442	CCL#6-EQUIP & VEHICLE RENTALS	612.48
R6	6-1242-412-00-060-001-0-780	JUSTICE CRT TECH-CAPITAL LEASES	6-1242-412-00-060-001-0-442	JUSTICE CRT TECH-EQUIP & VEHICLE RENT	928.00
R7	6-1242-412-00-060-001-0-780	JUSTICE CRT TECH-CAPITAL LEASES	6-1242-412-00-060-001-0-442	JUSTICE CRT TECH-EQUIP & VEHICLE RENT	392.00
R8	6-1100-412-00-070-001-0-780	INDIGENT DEFENSE-CAPITAL LEASES	6-1100-412-00-070-001-0-442	INDIGENT DEFENSE-EQUIP & VEHICLE RENT	628.40
R9	6-2202-419-50-115-065-0-780	DBM-W/C DIV-CAPITAL LEASES	6-2202-419-50-115-065-0-350	DBM-W/C DIV-OTHER SRV	168.98
R10	6-1100-432-00-121-001-0-780	PCT1 SANITATION-CAPITAL LEASES	6-1100-432-00-121-001-0-442	PCT1 SANITATION-EQUIP & VEHICLE RENT	448.00
R11	6-1200-431-00-121-004-0-780	PCT1 ADM-CAPITAL LEASES	6-1200-431-00-121-004-0-442	PCT1 ADM-EQUIP & VEHICLE RENTALS	360.49
R12	6-1100-452-00-121-013-0-780	PCT1 PARKS-CAPITAL LEASES	6-1100-452-00-121-013-0-442	PCT1 PARKS-EQUIP & VEHICLE RENT	570.00
R13	6-1100-414-00-130-001-0-780	ELECTIONS DEPT-CAPITAL LEASES	6-1100-414-00-130-001-0-350	ELECTIONS DEPT-OTHER SRV	153.64
R14	6-1100-415-15-140-001-0-780	TAX OFF-CAPITAL LEASES	6-1100-415-15-140-001-0-350	TAX OFF-OTHER SRV	297.00
R15	6-1100-415-15-140-001-0-780	TAX OFF-CAPITAL LEASES	6-1100-415-15-140-001-0-442	TAX OFF-EQUIP & VEHICLE RENTALS	335.32
R15	6-1100-415-15-140-001-0-780	TAX OFF-CAPITAL LEASES	6-1100-415-15-140-001-0-350	TAX OFF-OTHER SERVICES	38.56
R16	6-1100-415-16-150-001-0-780	TAX OFF-CAPITAL LEASES	6-1100-415-16-150-001-0-442	TAX OFF-EQUIP & VEHICLE RENTALS	405.96
R16	6-1100-415-16-150-001-0-780	TAX OFF-CAPITAL LEASES	6-1100-415-16-150-001-0-350	TAX OFF-OTHER SERVICES	38.56
R17	6-1100-415-16-150-001-0-780	CO TREASURER-CAPITAL LEASES	6-1100-415-16-150-001-0-442	CO TREASURER-EQUIP & VEHICLE RENTALS	535.77
R18	6-1100-419-10-210-001-0-430	PLANNING DEPT-REPAIR & MAINT SRV	6-1100-419-10-210-001-0-780	PLANNING DEPT-CAPITAL LEASES	9.44
R19	6-1100-421-00-291-001-0-780	CONST PCT1-CAPITAL LEASES	6-1100-421-00-291-001-0-430	CONST PCT1-REPAIR & MAINT SRV	22.50
R20	6-1100-421-00-293-001-0-430	CONST PCT3-REPAIR & MAINT SRV	6-1100-421-00-293-001-0-780	CONST PCT3-CAPITAL LEASES	3.00
R21	6-1100-423-79-330-001-0-780	JUVENILE DET PRE-CAPITAL LEASES	6-1100-423-79-330-001-0-442	JUVENILE DET PRE-EQUIP & VEHICLE RENT	373.03
R22	6-1100-461-00-380-001-0-780	TX AGRILIFE EXT-CAPITAL LEASES	6-1100-461-00-380-001-0-442	TX AGRILIFE EXT-EQUIP & VEHICLE RENT	1,318.44
R23	6-1100-412-00-090-001-0-442	DIST CLERK-EQUIP & VEHICLE RENT	6-1100-412-00-090-001-0-780	DIST CLERK-CAPITAL LEASES	762.00
	TOTAL				10,607.45

REASON:

Funds needed to reclassify corrections for 2016 expenditures. (PD 01-07) Per 01-07

DEPARTMENT HEAD SIGNATURE

APPROVED COMMISSIONERS' COURT **DATE** **ATTEST COUNTY CLERK**

COUNTY AUDITOR'S FORM: ARS-CA-017

REVISED: 02/11/2003

DATE: May 3, 2017

DEPARTMENT HEAD: Raymundo Eufracio, CPA

DEPARTMENT NAME: Hidalgo County Auditor's Office

ACCOUNT NUMBER: 6-XXXX-XXX-XX-XXX-XXX-X-XXX

PREPARED BY: Valeria I. Rios VR

APPROVED BY:

SUBJECT: Budget Line-Item Transfer (s)

Honorable Commissioners' Court of Hidalgo County:

I submit to you for your consideration the following line-item transfers in accordance with Local Government Code, Chapter 111, Subchapter C.:

	FROM		TO		
	ACCOUNT NUMBER	ACCOUNT (OBJECT) NAME	ACCOUNT NUMBER	ACCOUNT (OBJECT) NAME	AMOUNT
R1	6-1100-412-00-003-001-0-780	139TH DC-CAPITAL LEASES	6-1100-412-00-003-001-0-442	139TH DC-EQUIP & VEHICLE RENT	529.60
R2	6-1100-412-00-006-001-0-780	332ND DC-CAPITAL LEASES	6-1100-412-00-006-001-0-442	332ND DC-EQUIP & VEHICLE RENT	1,376.64
R3	6-1100-412-00-008-001-0-780	389TH DC-CAPITAL LEASES	6-1100-412-00-008-001-0-442	389TH DC-EQUIP & VEHICLE RENT	1,001.08
R3	6-1100-412-00-008-001-0-780	389TH DC-CAPITAL LEASES	6-1100-412-00-008-001-0-350	389TH DC-OTHER SRV	70.76
R4	6-1100-412-00-009-001-0-780	398TH DC-CAPITAL LEASES	6-1100-412-00-009-001-0-442	398TH DC-EQUIP & VEHICLE RENTALS	1,167.50
R4	6-1100-412-00-009-001-0-780	398TH DC-CAPITAL LEASES	6-1100-412-00-009-001-0-350	398TH DC-OTHER SRV	90.85
R5	6-1100-412-00-022-001-0-780	CCL#2-CAPITAL LEASES	6-1100-412-00-022-001-0-442	CCL#2-EQUIP & VEHICLE RENT	1,092.04
R6	6-1100-412-00-025-001-0-780	CCL#5-CAPITAL LEASES	6-1100-412-00-025-001-0-442	CCL#5-EQUIP & VEHICLE RENT	464.64
R6	6-1100-412-00-025-001-0-780	CCL#5-CAPITAL LEASES	6-1100-412-00-025-001-0-350	CCL#5-OTHER SERVICES	57.84
R7	6-1100-412-00-026-001-0-780	CCL#6-CAPITAL LEASES	6-1100-412-00-026-001-0-442	CCL#6-EQUIP & VEHICLE RENTALS	1,224.96
R8	6-1100-412-00-055-001-0-780	CHILD PROTECTION CRT-CAPITAL LEASES	6-1100-412-00-055-001-0-442	CHILD PROTECTION CRT-EQUIP &VEHICLE	333.30
R9	6-1242-412-00-060-001-0-780	JUSTICE CRT TECH-CAPITAL LEASES	6-1242-412-00-060-001-0-442	JUSTICE CRT TECH-EQUIP & VEHICLE RENT	116.00
R10	6-1242-412-00-060-001-0-780	JUSTICE CRT TECH-CAPITAL LEASES	6-1242-412-00-060-001-0-442	JUSTICE CRT TECH-EQUIP & VEHICLE RENT	98.00
R11	6-1100-412-00-066-001-0-780	JP PCT 3/PL 2-CAPITAL LEASES	6-1100-412-00-066-001-0-442	JP PCT 3/PL 2-EQUIP & VEHICLE RENT	1,073.65
R11	6-1100-412-00-066-001-0-780	JP PCT 3/PL 2-CAPITAL LEASES	6-1100-412-00-066-001-0-350	JP PCT 3/PL 2-OTHER SRV	90.85
R12	6-1100-412-00-070-001-0-780	INDIGENT DEFENSE-CAPITAL LEASES	6-1100-412-00-070-001-0-442	INDIGENT DEFENSE-EQUIP & VEHICLE RENT	157.10
R13	6-1100-412-00-090-001-0-780	DIST CLERK-CAPITAL LEASES	6-1100-412-00-090-001-0-430	DIST CLERK-REPAIR & MAINT SRV	128.00
R14	6-1100-412-00-090-001-0-780	DIST CLERK-CAPITAL LEASES	6-1100-412-00-090-001-0-430	DIST CLERK-REPAIR & MAINT SRV	128.00
R15	6-1100-412-00-090-001-0-780	DIST CLERK-CAPITAL LEASES	6-1100-412-00-090-001-0-430	DIST CLERK-REPAIR & MAINT SRV	396.00
R16	6-1100-412-00-090-001-0-780	DIST CLERK-CAPITAL LEASES	6-1100-412-00-090-001-0-430	DIST CLERK-REPAIR & MAINT SRV	128.00
R17	6-1100-412-00-090-001-0-430	DIST CLERK-REPAIR & MAINT SRV	6-1100-412-00-090-001-0-780	DIST CLERK-CAPITAL LEASES	24.31
R18	6-1100-412-00-090-001-0-780	DIST CLERK-CAPITAL LEASES	6-1100-412-00-090-001-0-430	DIST CLERK-REPAIR & MAINT SRV	355.50
R19	6-2202-419-50-115-065-0-780	DBM-W/C DIV-CAPITAL LEASES	6-2202-419-50-115-065-0-442	DBM-W/C DIV-EQUIP & VEHICLE RENT	881.24
R19	6-2202-419-50-115-065-0-780	DBM-W/C DIV-CAPITAL LEASES	6-2202-419-50-115-065-0-350	DBM-W/C DIV-OTHER SRV	120.70
R20	6-1100-432-00-121-001-0-780	PCT1 SANITATION-CAPITAL LEASES	6-1100-432-00-121-001-0-442	PCT1 SANITATION-EQUIP & VEHICLE RENT	784.00
R21	6-1100-452-00-121-013-0-780	PCT1 PARKS-CAPITAL LEASES	6-1100-452-00-121-013-0-442	PCT1 PARKS-EQUIP & VEHICLE RENT	684.00
R22	6-1200-431-00-122-005-0-780	PCT2 ADM-CAPITAL LEASES	6-1200-431-00-122-005-0-442	PCT2 ADM-EQUIP & VEHICLE RENTALS	79.60
R23	6-1200-431-00-124-005-0-780	PCT4 ADM-CAPITAL LEASES	6-1200-431-00-124-005-0-442	PCT4 ADM-EQUIP & VEHICLE RENT	487.08
R24	6-1100-414-00-130-001-0-780	ELECTIONS DEPT-CAPITAL LEASES	6-1100-414-00-130-001-0-350	ELECTIONS DEPT-OTHER SRV	230.46
R25	6-1100-415-15-140-001-0-780	TAX OFF-CAPITAL LEASES	6-1100-415-15-140-001-0-430	TAX OFF-REPAIR & MAINT SRV	891.00
R26	6-1100-415-15-140-001-0-780	TAX OFF-CAPITAL LEASES	6-1100-415-15-140-001-0-610	TAX OFF-GENERAL SUPPLIES	48.81
R27	6-1100-415-15-140-001-0-780	TAX OFF-CAPITAL LEASES	6-1100-415-15-140-001-0-442	TAX OFF-EQUIP & VEHICLE RENTALS	586.81
R27	6-1100-415-15-140-001-0-780	TAX OFF-CAPITAL LEASES	6-1100-415-15-140-001-0-350	TAX OFF-OTHER SERVICES	67.48
R28	6-1100-415-40-180-001-0-780	CO CLERK-CAPITAL LEASES	6-1100-415-40-180-001-0-442	CO CLERK-EQUIP & VEHICLE RENT	139.96
R29	6-1100-415-40-180-001-0-780	CO CLERK-CAPITAL LEASES	6-1100-415-40-180-001-0-442	CO CLERK-EQUIP & VEHICLE RENT	217.54
R30	6-1100-415-40-180-001-0-780	CO CLERK-CAPITAL LEASES	6-1100-415-40-180-001-0-442	CO CLERK-EQUIP & VEHICLE RENT	372.74
R31	6-1100-415-40-180-001-0-780	CO CLERK-CAPITAL LEASES	6-1100-415-40-180-001-0-442	CO CLERK-EQUIP & VEHICLE RENT	186.37
R32	6-1237-415-40-180-003-0-780	CC REC MGMT-CAPITAL LEASES	6-1237-415-40-180-003-0-442	CC REC MGMT-EQUIP & VEHICLE RENT	186.37

R 33	6-1237-415-40-180-003-0-780	CC REC MGMT-CAPITAL LEASES	6-1237-415-40-180-003-0-442	CC REC MGMT-EQUIP & VEHICLE RENT	186.37
R 34	6-1237-415-40-180-003-0-780	CC REC MGMT-CAPITAL LEASES	6-1237-415-40-180-003-0-442	CC REC MGMT-EQUIP & VEHICLE RENT	372.74
R 35	6-1100-421-00-280-001-0-780	SHERIFF-CAPITAL LEASES	6-1100-421-00-280-001-0-430	SHERIFF-REPAIR & MAINT SRV	0.02
R 36	6-1100-421-00-292-001-0-531	CONST PCT2-TELEPHONE	6-1100-421-00-292-001-0-780	CONST PCT2-CAPITAL LEASES	8.72
R 37	6-1100-421-00-293-001-0-430	CONST PCT3-REPAIR & MAINT SRV	6-1100-421-00-293-001-0-780	CONST PCT3-CAPITAL LEASES	3.00
R 38	6-1100-421-00-294-001-0-780	CONST PCT4-CAPITAL LEASES	6-1100-421-00-294-001-0-442	CONST PCT4-EQUIP & VEHICLE RENT	455.34
R 39	6-1100-461-00-380-001-0-780	TX AGRILIFE EXT-CAPITAL LEASES	6-1100-461-00-380-001-0-442	TX AGRILIFE EXT-EQUIP & VEHICLE RENT	219.74
R 40	6-1100-412-00-090-001-0-442	DIST CLERK-EQUIP & VEHICLE RENT	6-1100-412-00-090-001-0-780	DIST CLERK-CAPITAL LEASES	2,286.00
R 40	6-1100-412-00-090-001-0-442	DIST CLERK-EQUIP & VEHICLE RENT	6-1100-412-00-090-001-0-350	DIST CLERK-OTHER SRV	192.00
R 41	6-1100-412-30-085-003-0-442	PUBLIC DEFENDER-EQUIP & VEHICLE RENT	6-1100-412-30-085-003-0-350	PUBLIC DEFENDER-OTHER SRV	127.19
	TOTAL				19,919.90

REASON:

Funds needed to reclassify corrections for 2016 expenditures. (PD 08-13) Per 08-13

DEPARTMENT HEAD SIGNATURE

APPROVED COMMISSIONERS' COURT **DATE** **ATTEST COUNTY CLERK**

COUNTY AUDITOR'S FORM: ARS-CA-017

REVISED: 02/11/2003

AI-59912 **Budget and Management** **21. D. 2.**

CC - REGULAR

Meeting Date: 05/30/2017

Submitted By: Debbie Tamez, BUDGET & MANAGEMENT

Department: BUDGET & MANAGEMENT

Information

CAPTION

Pct. 1 Rd. Maintenance (1200):
Approval of 2017 appropriation of funds into Pct. 1 Rd. Maintenance (121-005) in the amount of $122,350.92.

BACKGROUND

Fiscal Impact

CALENDAR YEAR: 2014 **ACCT. #:** 7-1200-431-00-121-005-0-610

FUNDS AVAILABLE Y/N?: Y **MATCHING FUNDS Y/N?:** N

BUDGETARY IMPACT:

Appropriation of funds from unassigned fund balance.

Attachments

Appropriation

Form Review

Inbox	Reviewed By	Date
Budget & Management	Veronica Ortiz	05/17/2017 11:26 AM
Ivan Cantu	Ivan Cantu	05/17/2017 01:05 PM
Final Approval	Monica Salinas	05/26/2017 02:58 PM
Form Started By: Debbie Tamez		Started On: 05/17/2017 10:49 AM
Final Approval Date: 05/26/2017		

DATE: May 30, 2017

2017
Appropriation
AI- 59912

DEPARTMENT HEAD: Sergio Cruz, Budget Officer

DEPARTMENT NAME: Department of Budget & Management for Pct. 1 Rd. Maintenace (1200)

ACCOUNT NUMBER: 7-1200-431-00-121-005-0-610

Contact Person: Debbie Tamez **Ph#:** (956) 292-7025 Ext. 5427

SUBJECT: **Budget Amendments** (increase (decrease)) in accordance with Local Government Code, Chapter 111, § 111.070, Item C (2).

Honorable Commissioners' Court of Hidalgo County:

I would like to request the following Budget Amendments (increase (decrease)) in accordance with Local Government Code, Chapter 111, § 111.070, Item C (2).

INCREASE ACCOUNT NUMBER(S)	ACCOUNT (OBJECT) NAME	AMOUNT
7-1200-431-00-121-005-0-610	Pct. 1 Rd Maint-General Supplies	122,350.92
	TOTAL BUDGET INCREASE (DECREASE)	$122,350.92

REASON: Appropriation of funds from R&B Unassigned Fund Balance (7-1200-258-00-000-000-0-000) to fund anticipated expenditures.

DEPARTMENT HEAD SIGNATURE

APPROVED COMMISSIONERS' COURT

/ /
DATE

ATTEST COUNTY CLERK

AI-59988 **Purchasing Department** **22. A.**

CC - REGULAR

Meeting Date: 05/30/2017

Submitted For: Marty Salazar, PURCHASING DEPT.

Submitted By: Marty Salazar, PURCHASING DEPT.

Department: PURCHASING DEPT.

Information

CAPTION

Approve an "Order" establishing the "Public Purpose" for the purchase of promotional items for disseminating information to vendors and residents of the functions, duties, responsibilities, policies and procedures of the Hidalgo County Purchasing Department at upcoming events commencing with UTRGV's Procurement Technical Assistance Center Annual South Texas Business Opportunity Forum [scheduled for June 27, 2017] thus promoting and encouraging more interest and vendor participation in the County's procurement projects.

BACKGROUND

All acquisition of promotional items and supplies will be through our Requisition and Purchase Order System with need for proper funding of said expenditures.

Fiscal Impact

CALENDAR YEAR: **ACCT. #:**

FUNDS AVAILABLE Y/N?: **MATCHING FUNDS Y/N?:**

BUDGETARY IMPACT:

Department will need appropriate funding to make of these permitted expenditures.

Attachments

UTRGV June 27, 2017

UTRGV Meet the Buyer

Art. 3 Sec 52 Legislative Department

Form Review

Inbox	Reviewed By	Date
Purchasing - Internal	Marty Salazar	05/25/2017 03:10 PM
Budget & Management	Veronica Ortiz	05/25/2017 03:12 PM
Final Approval	Monica Salinas	05/26/2017 02:58 PM
Form Started By: Marty Salazar		Started On: 05/24/2017 03:25 PM
Final Approval Date: 05/26/2017		

The University of Texas Rio Grande Valley

Procurement Technical Assistance Center

June 27, 2017
Agency Registration Form

Contact Name: _____

Agency Name: _____

Address: _____

City: _____

State: _____ **Zip:** _____

Phone/Fax: _____

E-mail: _____

Don't wait - space is limited!
Participants registered on a first come basis.

Event and Parking is FREE to agencies and the public!

Please e-mail your completed registration form to

Orlando.Castaneda@utrgv.edu

EDC WESLACO

Buyers Rd. Sellers Ln.

The University of Texas Rio Grande Valley
Procurement Technical Assistance Center

FREE

"Mid-Valley Meet the Buyer"

Procurement Seminar

A Business Opportunity Forum Sponsored by:

H-E-B

Law Office of Diana Fuentes Aguilar

Eric Garcia Agent Allstate. You're in good hands.

South Texas Federal Credit Union

DOOR PRIZES

	Light breakfast
Registration:	**8:00 AM**
Seminar:	**8:30 - 10:30 AM**
Date:	**Thursday, April 27, 2017**
Location:	**Weslaco Business & Event Center**
	275 S. Kansas Ave.
	Weslaco, Texas
	RSVP by April 17, 2017 @ 956-969-0838

Participating Agencies

Hidalgo County • STC • U.S.SBA • UTRGV • WISD

Log In | Sign Up

Art 3 - Sec 52

Article 3 - LEGISLATIVE DEPARTMENT

Section 52 - COUNTIES, CITIES OR OTHER POLITICAL CORPORATIONS OR SUBDIVISIONS; LENDING CREDIT; GRANTS; BONDS

(a) Except as otherwise provided by this section, the Legislature shall have no power to authorize any county, city, town or other political corporation or subdivision of the State to lend its credit or to grant public money or thing of value in aid of, or to any individual, association or corporation whatsoever, or to become a stockholder in such corporation, association or company. However, this section does not prohibit the use of public funds or credit for the payment of premiums on nonassessable property and casualty, life, health, or accident insurance policies and annuity contracts issued by a mutual insurance company authorized to do business in this State.

(b) Under Legislative provision, any county, political subdivision of a county, number of adjoining counties, political subdivision of the State, or defined district now or hereafter to be described and defined within the State of Texas, and which may or may not include, towns, villages or municipal corporations, upon a vote of two-thirds majority of the voting qualified voters of such district or territory to be affected thereby, may issue bonds or otherwise lend its credit in any amount not to exceed one-fourth of the assessed valuation of the real property of such district or territory, except that the total bonded indebtedness of any city or town shall never exceed the limits imposed by other provisions of this Constitution, and levy and collect taxes to pay the interest thereon and provide a sinking fund for the redemption thereof, as the Legislature may authorize, and in such manner as it may authorize the same, for the following purposes to wit:

(1) The improvement of rivers, creeks, and streams to prevent overflows, and to permit of navigation thereof, or irrigation thereof, or in aid of such purposes.

(2) The construction and maintenance of pools, lakes, reservoirs, dams,

AI-59848 **Purchasing Department** **22. B. 1.**

CC - REGULAR

Meeting Date: 05/30/2017

Submitted For: Marty Salazar, PURCHASING DEPT.

Submitted By: Sandy Suarez, PURCHASING DEPT.

Department: PURCHASING DEPT.

Information

CAPTION

Presentation of bids received [as detailed in tabulation sheet contained herein] for the purpose of award & approval of contract document, to the vendor submitting the lowest & best bid for "Limestone" [meeting all specifications/requirements] and subject to compliance with HB1295 (if & when applicable).

BACKGROUND

1. Sent out 12 packets 2. Received four (4) bids - Low Bidder: Frontera Materials, Inc. (Limestone) 3. Contract document was reviewed & approval by Legal Counsel as to form.

Fiscal Impact

CALENDAR YEAR: 2017 **ACCT. #:** 7-1200-431-00-12X-00X-0-610

FUNDS AVAILABLE Y/N?: Y **MATCHING FUNDS Y/N?:**

BUDGETARY IMPACT:

hot mix/asphalt & limestone materials are mainly used by precincts Rd. Maint divisions; funding source is obj. 610 "General Supplies", funds available as of 5-22-17.

Attachments

Recommendations
Tabulation
Participation
Contract agreement
Legal approval
Form 1295

Form Review

Inbox	Reviewed By	Date
Purchasing - Internal	Marty Salazar	05/22/2017 11:51 AM
Budget & Management	Veronica Ortiz	05/22/2017 01:29 PM
Ivan Cantu	Ivan Cantu	05/23/2017 01:41 PM
Final Approval	Monica Salinas	05/26/2017 02:58 PM
Form Started By: Sandy Suarez		Started On: 05/12/2017 11:13 AM

Final Approval Date: 05/26/2017

Hidalgo County Purchasing Office
2812 S. Business Highway 281
New Administration Building
Edinburg, Texas 78539
(956) 318-2626 / Fax: (956) 318-2629

MEMORANDUM

Date: March 16, 2017

TO: **Hon. David Fuentes, Commissioner**
Hidalgo County Precinct No. 1
Attn: Amy Saenz-Smith / Mari Gutierrez

TO: **Hon. Joe M. Flores, Commissioner**
Hidalgo County Precinct No. 3
Attn: Saul Ramirez/ Norma Ceballos

TO: **Hon. Eduardo Cantu, Commissioner**
Hidalgo County Precinct No. 2
Attn: Armando Pompa / Yoli Cisneros

TO: **Hon. Joseph Palacios, Commissioner**
Hidalgo County Precinct No. 4
Attn: .Lulu Lucio/ Roman Rodriguez

From: Sandy Suarez, Buyer II
Hidalgo County Purchasing Department

RE: **BID AWARD RECOMMENDATION REQUEST**
Bid No. 2017-042-03-15-SGS- Hidalgo County- "TYPE D HOT MIX ASPHALT (GRAVEL & LIMESTONE)"

Enclosed you will find the Tabulation sheet and copies of the four Bid **(4)** responses received for the above referenced project. Please review and indicate your Recommendation and/or concerns below.

We would like to present your recommendation to Commissioner's Count Meeting. Please indicate your Recommendation/ Vendor Name or any concerns on the space provided below and reply to the Purchasing Department **via fax to (956)-292-7612 or via email to: sandy.suarez@co.hidalgo.tx.us. Please return by Thursday, March 23, 2017 by 1:00 P.M.**

If you should have any questions or need additional information please contact me at (956) 318-2626 ext.4860

Please Indicate Awarded Vendor(s) Name Below.

Recommendation(s) / Vendor Name(s):	**Indicate Reason (basis) (i.e. Sole bid, low bidder etc.)**
Frontera Materials	Limestone Lowest Bid
Tierra Firma Materials	Gravel Lowest Bid
Comments/Concerns: PCT. # 1 ROAD & BRIDGE	
BUDGET ACCOUNT #: 7-1200431-00-121-005-0-1010	

David Suarez 4/26/17

Authorized Signature | Printed Name | Department | Date

Enclosures

Pct 1

Hidalgo County Purchasing Office
2812 S. Business Highway 281
New Administration Building
Edinburg, Texas 78539
(956) 318-2626 / Fax: (956) 318-2629

MEMORANDUM

Date: March 16, 2017

TO: **Hon. David Fuentes, Commissioner**
Hidalgo County Precinct No. 1
Attn: Amy Saenz-Smith / Mari Gutierrez

TO: **Hon. Joe M. Flores, Commissioner**
Hidalgo County Precinct No. 3
Attn: Saul Ramirez/ Norma Ceballos

TO: **Hon. Eduardo Cantu, Commissioner**
Hidalgo County Precinct No. 2
Attn: Armando Pompa / Yoli Cisneros

TO: **Hon. Joseph Palacios, Commissioner**
Hidalgo County Precinct No. 4
Attn: Lulu Lucio/ Roman Rodriguez

From: Sandy Suarez, Buyer II
Hidalgo County Purchasing Department

RE: BID AWARD RECOMMENDATION REQUEST
Bid No. 2017-042-03-15-SGS- Hidalgo County- "TYPE D HOT MIX ASPHALT (GRAVEL & LIMESTONE)"

Enclosed you will find the Tabulation sheet and copies of the four Bid (4) responses received for the above referenced project. Please review and indicate your Recommendation and/or concerns below.

We would like to present your recommendation to Commissioner's Count Meeting. Please indicate your Recommendation/ Vendor Name or any concerns on the space provided below and reply to the Purchasing Department via fax to (956)-292-7612 or via email to: sandy.suarez@co.hidalgo.tx.us. Please return by Thursday, March 23, 2017 by 1:00 P.M.

If you should have any questions or need additional information please contact me at (956) 318-2626 ext.4860

Please Indicate Awarded Vendor(s) Name Below.

Recommendation(s) / Vendor Name(s):	Indicate Reason (basis) (i.e. Sole bid, low bidder etc.)
Frontera Materials, Inc.	low bidder, proximity to Pct 2 (Limestone)
~~Upper Valley Materials, LLC~~ Terra Firma	proximity to Pct. 2 (Gravel) YC.
Comments/Concerns:	

BUDGET ACCOUNT #: 7-1200-431-00-122-0060-0-610 (Varies based on project)

Armando Pompa — Pct. 2 Field Ops — 3/21/17

Authorized Signature — Printed Name — Department — Date 4/12/2017

Enclosures

Hidalgo County Purchasing Office
2812 S. Business Highway 281
New Administration Building
Edinburg, Texas 78539
(956) 318-2626 / Fax: (956) 318-2629

MEMORANDUM

Date: March 16, 2017

TO: Hon. David Fuentes, Commissioner
Hidalgo County Precinct No. 1
Attn: Amy Saenz-Smith / Mari Gutierrez

TO: Hon. Joe M. Flores, Commissioner
Hidalgo County Precinct No. 3
Attn: Saul Ramirez/ Norma Ceballos

TO: Hon. Eduardo Cantu, Commissioner
Hidalgo County Precinct No. 2
Attn: Armando Pompa / Yoli Cisneros

TO: Hon. Joseph Palacios, Commissioner
Hidalgo County Precinct No. 4
Attn: .Lulu Lucio/ Roman Rodriguez

From: Sandy Suarez, Buyer II
Hidalgo County Purchasing Department

RE: BID AWARD RECOMMENDATION REQUEST
Bid No. 2017-042-03-15-SGS- Hidalgo County- "TYPE D HOT MIX ASPHALT (GRAVEL & LIMESTONE)"

Enclosed you will find the Tabulation sheet and copies of the four Bid (4) responses received for the above referenced project. Please review and indicate your Recommendation and/or concerns below.

We would like to present your recommendation to Commissioner's Count Meeting. Please indicate your Recommendation/ Vendor Name or any concerns on the space provided below and reply to the Purchasing Department **via fax to (956)-292-7612 or via email to: sandy.suarez@co.hidalgo.tx.us. Please return by Thursday, March 23, 2017 by 1:00 P.M.**

If you should have any questions or need additional information please contact me at (956) 318-2626 ext.4860

Please Indicate Awarded Vendor(s) Name Below.

Recommendation(s) / Vendor Name(s):	Indicate Reason (basis) (i.e. Sole bid, low bidder etc.)
Frontera Materials, Inc.	Hot-Mix - Limestone
Terra Firma Materials, LLC.	Gravel
Comments/Concerns:	
BUDGET ACCOUNT #: 7-1200-431-00-124-007-0-610	

Authorized Signature	Printed Name	Department	Date
	Roman Rodriguez	Ronda Bridge	4/13/17

Enclosures

P.4

Hidalgo County Purchasing Office
2812 S. Business Highway 281
New Administration Building
Edinburg, Texas 78539
(956) 318-2626 / Fax: (956) 318-2629

MEMORANDUM

Date: March 16, 2017

TO: **Hon. David Fuentes, Commissioner**
Hidalgo County Precinct No. 1
Attn: Amy Saenz-Smith / Mari Gutierrez

TO: **Hon. Joe M. Flores, Commissioner**
Hidalgo County Precinct No. 3
Attn: Saul Ramirez/ Norma Ceballos

TO: **Hon. Eduardo Cantu, Commissioner**
Hidalgo County Precinct No. 2
Attn: Armando Pompa / Yoli Cisneros

TO: **Hon. Joseph Palacios, Commissioner**
Hidalgo County Precinct No. 4
Attn: .Lulu Lucio/ Roman Rodriguez

From: Sandy Suarez, Buyer II
Hidalgo County Purchasing Department

RE: BID AWARD RECOMMENDATION REQUEST
Bid No. 2017-042-03-15-SGS- Hidalgo County- "TYPE D HOT MIX ASPHALT (GRAVEL & LIMESTONE)"

Enclosed you will find the Tabulation sheet and copies of the four Bid (4) responses received for the above referenced project. Please review and indicate your Recommendation and/or concerns below.

We would like to present your recommendation to Commissioner's Count Meeting. Please indicate your Recommendation/ Vendor Name or any concerns on the space provided below and reply to the Purchasing Department **via fax to (956)-292-7612 or via email to: sandy.suarez@co.hidalgo.tx.us. Please return by Thursday, March 23, 2017 by 1:00 P.M.**

If you should have any questions or need additional information please contact me at (956) 318-2626 ext.4860

Please Indicate Awarded Vendor(s) Name Below.

Recommendation(s) / Vendor Name(s):	Indicate Reason (basis) (i.e. Sole bid, low bidder etc.)
Upper Valley Materials	
	2nd lowest, due to distance
Comments/Concerns:	
BUDGET ACCOUNT #: 7-120-431-00 123-005-0-610	

Authorized Signature	Printed Name	Department	Date
	Joe M. Flores	Pct #3	4-6-17

Enclosures

Pct 3

HIDALGO COUNTY PURCHASING DEPARTMENT
BID TABULATION SHEET

DEPARTMENT NAME: HIDALGO COUNTY

BID OPENING DATE: March 15, 2017 | **BID OPENING TIME: 9:30 A.M.**

DESCRIPTION OF BID: "TYPE D HOT MIX ASPHALT(GRAVEL & LIMESTONE)"

BID NO: 2017-042-03-15-SGS | **BUYER: Sandy Suarez**

	NAME OF COMPANY/PLANT LOCATION	PRICE PER TON	TOTAL PRICE	
1	VALLEY CALICHE PRODUCTS, INC.	Gravel	Mission	48.25
	3656 Iowa Rd/ 3 Mi line& Iowa Rd. W. Mission, TX. 78574	Limestone	Mission	No Bid
2	FRONTERA MATERIALS, INC.	Gravel	LaJoya	47.70
	LaJoya Plant- 2. Mi N. of US 83 on FM 2221	Limestone	Progresso	47.70
	Progresso Plant- ¼ Mi E if FM 1015 on Military			
3	UPPER VALLEY MATERIALS, LLC (CAPA)	Gravel	Penitas	46.00
	Penitas Plant -Tomgil & 3 Mi line	Limestone	Progresso	47.95
	Progresso Plant-S. Gonzales Rd			
4	TERRA FIRMA MATERIALS, LLC	Gravel	La Joya	43.04
	430530 W. Exp. 83, LaJoya, TX. 78560	Limestone	La Joya	49.28

Internal Use Only: Commodity Code: 745-11

HIDALGO COUNTY PURCHASING DEPARTMENT
PARTICIPATING BIDDER'S LOG
SPECIFICATIONS/BID PACKETS

RFB-RFP-RFQ

BID OPENING DATE: MARCH 15, 2017 **BID OPENING TIME: 9:30 A.M**

DEPARTMENT/BID DESCRIPTION: HIDALGO COUNTY (All Sources, Programs and Entities) "TYPE D HOT MIX ASPHALT(GRAVEL & LIMESTONE)"

BID NO: 2017-042-03-15-SGS

NAME OF BIDDER: COMPANY/FIRM	BID REQUEST VIA*	SIGNATURE (IF APPLICABLE) OR INITIALS OF STAFF ADDRESSING MAIL OUT	DATE	PHYSICAL ADDRESS CITY-STATE-ZIP PHONE & FAX NO.s
1. Progreso Materials Attn: Erica Benavides	e-mail	Sandy Suarez	02/27/17	PO Box 250 McAllen, Tx 78505 956-618-0140 Fax: 630-5869 progresomaterials@yahoo.com
2. Valley Caliche Attn: Mark Motheral	e-mail	Sandy Suarez	02/27/17	PO Box 1086 Mission, Tx 78573 581-2751 Fax: 585-6844 valleycaliche@aol.com
3.) Frontera Materials Inc. Attn: Barry M. Ehlinger	e-mail	Sandy Suarez	02/27/17	PO Box 1449 Elsa, Texas 316-8900 Fax: 316-8905 barry@fmitex.com
4.) Chemical Lime Attn:Jim Scholl	e-mail	Sandy Suarez	02/27/17	350 APG Lane New Braunfels, Tx 78132 800-292-5278 Fax: 830-625-4786 Jim.scholl@chemicallime.com
5.) Prime Vendor Attn: Katie Collier	e-mail	Sandy Suarez	02/27/17	Bids3@prime-vendor.com
6.) CAPA Attn: Charlie Flores Steve Boyd	e-mail	Sandy Suarez	02/27/17	7301 W. Expressway 83 Mission, Texas 78572 580-2502 Fax: 583-2086 cflores@capatexas.com sboyd@capatexas.com
7.) Virtual Builders Exchange Karen Sesters	EMRl	Sandy Suarez	02/27/17	4047 Naco Perrin, Ste 100 San Antonio, TX. 78217 P-210-564-6900 X 126 F-210-564-6902 Karen@virtualbx.com
8.) Prime Vendor, Inc. Ashley Reed	EMR	Sandy Suarez	02/27/17	4622 Cedar Ave. Suite 124 Wilmington, NC 28403 Phone: 800-746-9554 Fax: 800-746-8307 Work41@prime-vendor.com

9.) IOC Sebastin Salinas	EMR	Sandy Suarez	02/27/17	9312 Curve Rd. Edinburg, TX. 78542 O- 956-380-78542 P-956-380-4085 C-956-239-7938 ssalinas@ioccompany.com
10) International Materials LLC Attn: Javier Garza	EMR	Sandy Suarez	02/27/17	3408 N. Conway Mission, Texas 78574 956-240-1423 & 956-862-3701 fax 956-584-3206 internationalmats@at&t.net
11) Oniva Jacqueline Sessa	EMR	Sandy Suarez	02/28/17	509 Olive Way Seattle, WA. 98101 206.373.9150 jsessa@oniva.com
12) Terra Firma Materials Eloy Tello	EMR	Sandy Suarez	03/08/17	9312 E. Curve Rd Edinburg, TX. 78542 O- 956.380-2897 F-956.380.4085 etello@ioccompany.com

***VIA:**
IN PERSON (IP)
TELEPHONE REQUEST (TR)
BIDDER LIST MAIL OUT (BLM)
E-MAIL (EM)

REQUIREMENTS AGREEMENT
C-17-042-05-30

THIS AGREEMENT (the "Agreement") is entered into as of the **30th** day of **May, 2017** by and between **Frontera Material, Inc.** ("Seller") and **Hidalgo County** ("Buyer").

WHEREAS, Buyer has solicited proposals for the supply of its requirements of **"Limestone" [Only]**, as further described in Exhibit "A" the Request for Bid (RFB) Procurement Packet, which is attached hereto and incorporated herein by reference for all purposes (the "RFB") for a period of one year for **Precincts 1-2-3-4**;

WHEREAS, Seller has submitted a bid to supply Buyer's requirements; and

WHEREAS, Buyer has determined that Seller has submitted the lowest and best bid to meet Buyer's requirements for certain Products, as described herein.

NOW THEREFORE, for and in consideration of the mutual covenants and conditions hereinafter set forth, and other good and valuable consideration, the receipt and sufficiency of which is hereby acknowledged, the parties hereto agree as follows:

1. Buyer agrees to purchase from Seller, and Seller agrees to sell and deliver to Buyer the **"Limestone" [Only]** (the "Product") listed on Exhibit "B", which is attached hereto and incorporated herein by reference, that Buyer may require for use by Buyer in Hidalgo County projects for a period of **one (1) year**, with the Buyer's sole option to extend/renew for an additional one (1) year term based upon prior year's performance evaluation and contingent upon cost, terms and conditions remaining unchanged. Buyer reserves the right to continue this bid for an additional sixty (60) day grace period, under the same rates, terms and conditions at the end of the contract term for unforeseen delays in award of new bid for the next contract term. This agreement shall commence on **June 9, 2017** and expires on **June 8, 2018** and it is agreed that the Products will meet the Specifications in the Request for Bids (RFB) Procurement Packet set forth in Exhibit "A" hereto.

2. When Buyer determines that it needs a quantity of the Products to be delivered, it will, according to its Purchasing Policies, complete and submit to Seller a Purchase Order describing the type and quantity of the Products required.

3. Buyer agrees to pay Seller for each Purchase Order based on the prices set out in Exhibit "B". Seller shall render invoices for each Purchase Order, and the invoices shall be paid by Buyer on or before the 30th day following receipt of the invoice.

General Provisions.

a. **Conflict with Applicable Law.** Nothing in this Agreement shall be construed so as to require the commission of any act contrary to law, and whenever there is any conflict between any provision of this Agreement and any present or future law, ordinance or administrative, executive or judicial regulation, order or decree, or

amendment thereof, contrary to which the parties have no legal right to contract, the latter shall prevail, but in such event the affected provision or provisions of this Agreement shall be modified only to the extent necessary to bring them within the legal requirements and only during the time such conflict exists.

b. **No Waiver.** No waiver by Buyer of any breach of any provision of this Agreement shall be deemed to be a waiver of any preceding or succeeding breach of the same or any other provision hereof.

c. **Entire Agreement.** This Agreement contains the entire contract between the parties hereto, and each party acknowledges that neither has made (either directly or through any agent or representative) any representations or agreements in connection with this Agreement not specifically set forth herein. This Agreement may be modified or amended only by agreement in writing executed by Buyer and Seller, and not otherwise.

d. **Texas Law to Apply.** This Agreement shall be construed under and in accordance with the laws of the State of Texas, and all obligations of the parties created hereunder are performable in Hidalgo County, Texas. The parties hereby consent to personal jurisdiction in Hidalgo County, Texas.

e. **Notice.** Except as may be otherwise specifically provided in this Agreement, all notices, demands, requests or communications required or permitted hereunder shall be in writing and shall either be (i) personally delivered against a written receipt, or (ii) sent by registered or certified mail, return receipt requested, postage prepaid and addressed to the parties at the addresses set forth below, or at such other addresses as may have been theretofore specified by written notice delivered in accordance herewith:

If to Buyer:
Hidalgo County
Attn: County Judge
100 East Cano, 2nd Floor (Admin. Bldg.)
Edinburg, Texas 78539

If to Seller:
Frontera Materials, Inc.
Attn: Barry M. Elinger, Materials Manager
P. O. Box 1449
Elsa, Texas 78543

Each notice, demand, request or communication which shall be delivered or mailed in the manner described above shall be deemed sufficiently given for all purposes at such time as it is personally delivered to the addressee or, if mailed, at such time as it is deposited in the Unites States mail.

f. **Termination.** Buyer may terminate this Agreement at any time for any reason or no reason at all upon giving thirty (30) days written notice.

g. **Additional Documents.** The parties hereto covenant and agree that they will execute such other and further instruments and documents as are or may become necessary or convenient to effectuate and carry out the terms of this Contract.

h. **Successors.** This Agreement shall be binding upon and inure to the benefit of the parties hereto and their respective heirs, executors, administrators, legal representatives, successors, and assigns where permitted by this Agreement.

i. **Assignment.** This Agreement shall not be assignable.

j. **Headings.** The headings and captions contained in this Agreement are solely for convenient reference and shall not be deemed to affect the meaning or interpretation of any provision or paragraph hereof.

k. **Gender and Number.** All pronouns used in this Agreement shall include the other gender, whether used in the masculine, feminine or neuter gender, and the singular shall include the plural whenever and as often as may be appropriate

l. **Authority to Execute.** The execution and performance of this Agreement by Buyer and Seller have been duly authorized by all necessary laws, resolutions or corporate action, and this Agreement constitutes the valid and enforceable obligations of Buyer and Seller in accordance with its terms.

m. **Insurance.** Seller shall provide, to the extend it deems necessary, insurance in force on all persons connected with providing services under this Contract naming Buyer as an additional insured, and shall furnish to Buyer certificates of such insurance coverage Exhibit "C", which is attached hereto.

n. **Commitment of Current Revenues Only**. In the event that, during any term hereof, the Commissioners Court of Buyer does not appropriate sufficient funds to meet the obligations of Buyer under this Agreement, Buyer may terminate this Agreement upon sixty (60) days written notice to Seller. Buyer agrees, however, to use reasonable efforts to secure funds necessary for the continued performance of this Agreement. The parties intend this provision to be a continuing right to terminate this Agreement at the expiration of each budget period of Buyer pursuant to the provisions of Tex. Loc. Govt. Code Ann. ' 271.903 (Vernon Supp. 1996).

o. **Immunities.** Nothing in this Agreement is intended to and Buyer does not hereby waive, release or relinquish any right to assert any of the defenses Buyer enjoys by virtue of the state or federal constitution, laws, rules or regulations, and any sovereign, official or qualified immunity available to Buyer as to any claim or action of any person, entity, or individual against Buyer.

p. **Purchasing Ethics**. Seller represents and warrants it has not, during the process of being awarded this contract violated the following ethical standards of Buyer and, upon and after the execution of this Agreement, agrees to abide by the following ethical standards of Buyer:

(1) It shall be a breach of ethics to offer, give or agree to give any elected official, department head or employee, or former elected official, department head or employee, of Hidalgo County, or for any elected official, department head or employee or former elected official, department head or employee of Hidalgo County, to solicit, demand, accept or agree to accept from another person, entity or organization, a gratuity or an officer of employment in connection with any decision, approval, disapproval, recommendation, preparation or any part of a program requirement or purchase request, influencing the content of any specification or procurement standard, rendering of advise, investigation, auditing, or in any other advisory capacity in any proceeding or application, request for ruling, determination, claim or controversy, or other particular matter pertaining to any program requirement or a contract or subcontract, or to any solicitation or proposal therefore pending before any department or agency of Hidalgo County.

(2) It shall be a breach of ethics for any payment, gratuity or offer of employment to be made by or on behalf of a subcontractor under a contract to the prime contractor or higher tier subcontractor for any contract for Hidalgo County, or any person associated therewith, as an inducement for the award of a subcontract or order.

q. **Nondiscrimination:** Seller, including subcontractors, assignees and successors in interest, ensures that no person shall on the grounds of race, religion (where the primary objective of the financial assistance is to provide employment per 42 U.S.C. §2000d-3), color, national origin, sex, age, or disability be excluded from participation in, be denied the benefits of, or be otherwise subjected to discrimination or retaliation in any federally or non-federally funded program or activity when providing any services described herein under this contract/agreement.

EXECUTED effective as of the day and year first above written.

Approved By Commissioners Court: _____, 2017.

APPROVED AS TO FORM:
Atlas, Hall & Rodriguez, L.L.P.

_____
Stephen L. Crain, Attorney

COUNTY OF HIDALGO

ATTEST:

By: _____
Ramon Garcia, County Judge

_____
Arturo Guajardo Jr., County Clerk

COMPANY:
FRONTERA MATERIALS, INC.

By: _____

Printed Name: Barry M. Elinger

Title: Materials Manager

EXHIBIT "A"

REQUEST FOR BID (RFB) PROCUREMENT PACKET

Hidalgo County Purchasing Office
2812 S. Business Highway 281
New Administration Building
Edinburg, Texas 78539
(956) 318-2626/ Fax: (956) 292-7612

February 27, 2017

_____
Bidder's name

_____
Address

_____
City

_____
State, Zip Code

Re: **HIDALGO COUNTY (all funding sources, programs & entities)**
Request for Bids –"TYPE D HOT MIX ASHPALT (GRAVEL & LIMESTONE"
RFB Bid No: 2017-042-03-15-SGS

Dear Gentleman/Ladies:

Enclosed, please find the Request for Bids (RFB) packet. **Modifications and new requirements** have been added and implemented. Carefully read and review all instructions, Requirements and Specifications.

Hidalgo County Purchasing Department welcomes and appreciates your participation in the Request for Bids process.

If any further assistance is required, please do not hesitate to call the Purchasing Department 956/318-2626 x 4860.

Sincerely,

Martha L. Salazar, CPPB
Hidalgo County Purchasing Agent

MLS/sgs
Enclosures

HIDALGO COUNTY PURCHASING OFFICE
2812 S. Business Highway 281
Administration Building
Edinburg, Texas 78539
(956) 318-2626/ Fax: (956) 292-7612

TABLE OF CONTENTS
REQUEST FOR BIDS (RFB)
HIDALGO COUNTY
(all funding sources, programs & entities)
"TYPE D HOT MIX ASPHALT (GRAVEL & LIMESTONE"
RFB NO: 2017-042-03-15-SGS

ITEM	DESCRIPTION	NO. OF PAGES
1.	Request For Bid Letter	1
2.	Request for Bid, Legal Notice	8
3.	Table of Contents	1
4.	Exhibit A, Specifications	4
5.	Exhibit B, Bid Page	1
6.	Exhibit C, Insurance Requirements	4
7.	Exhibit D, (CIQ) Conflict of Interest Questionnaire (if applicable)	2
8.	Exhibit E, Vendor/Bidder Application and W-9 form(s)	6
9.	Exhibit F, Certification Regarding Debarment	1
10.	Exhibit G, Title VI Appendices "A" through "E"	6
10.	RFB Submittal Checklist	1
11.	Draft Contract	10

The above mentioned items shall be found in this Request for Bids-Goods/Products-RFB packet that is attached herewith. Should you find that any of the listed items are not attached in its entirety, please contact Purchasing by calling (956) 318-2626 or e-mail, to advise us of the missing documentation, and Purchasing will forward information either through facsimile, e-mail or by U.S. Mail.

Thank you.

Martha L. Salazar, CPPB, Purchasing Agent

02/27/17
Date

Revised 09/13/16

REQUEST FOR BIDS

HIDALGO COUNTY
"TPE D HOT MIX ASPHALT (GRAVEL & LIMESTONE)

BID OPENING DATE

MARCH 15, 2017

Contact Person:

Martha L. Salazar, CPPB, Purchasing Agent
Hidalgo County Purchasing Department
Physical Address: 2802 S. Business Hwy. 281 - Administration Building
Mailing/Postal Address: 2812 S. Business Hwy. 281
Edinburg, Texas 78539
956 318-2626

Form HCPD-03

1. Sealed bids will be received for **"HIDALGO COUNTY-"TYPE D HOT MIX ASPHALT (GRAVEL & LIMESTONE)"** in accordance with the specifications attached as **Exhibit "A"** hereto. Bids should address all specifications set forth. Bidders may suggest substitutions of features which they feel would be in the best interest of Hidalgo County ("County"). Strong rationale must be presented for any deviation from the specifications. Hidalgo County reserves the right to reject the deviation and its effect on the overall bid.

2. **One (1) original and Three (3) copies** of all bids are required with the bidders name and return address clearly typed and or/printed on upper left hand corner and the proper notation clearly typed/printed on the lower left hand corner of the envelope and/or package: **BID NO.:2017-042-03-15-SGS"-HIDALGO COUNTY"** and at County's Purchasing Department with a physical address: 2802 S. Business 281 and a mailing address: 2812 S. Business Hwy 281, Administration Building, Edinburg, Texas, **on or before 9:30 A.M, WEDNESDAY, MARCH 15, 2017. NO FACSIMILES, EMAILS OR LATE ARRIVALS WILL BE ACCEPTED. ANY RFB RECEIVED AFTER THAT TIME WILL NOT BE OPENED AND WILL BE RETURNED. OVERNIGHT MAIL MUST ALSO BE PROPERLY LABELED ON THE OUTSIDE OF EXPRESS ENVELOPE OR PACKAGE WITH REFERENCE TO RFB NO.: 2017-042-03-15-SGS-"HIDALGO COUNTY-"TYPE D HOT MIX ASPHALT (GRAVEL & LIMESTONE".** Hidalgo County reserves the right to refuse and reject any/all bids and to waive any/all formalities or technicalities, or to accept the bids considered the best and most advantageous to Hidalgo County.

   Additionally, all forms listed below must be properly executed and included with your bid:

   1. Legal Notice (See page 8);
   2. Bid Page – Procurement Form – Areas of Specialization (See **Exhibit "B"**);
   3. Insurance pages with Acknowledgment Forms (See **Exhibit "C"**);
   4. Form CIQ-Conflict of Interest Questionnaire (See **Exhibit "D"**);
   5. Vendor Bidder Application & W-9 forms (See **Exhibit "E"**);
   6. Certification Regarding Debarment (See **Exhibit "F"**); and
   7. SAMS.gov Registration Acknowledgement (See Number 18 below).

3. Hidalgo County reserves the right to: A. separate and accept, or eliminate any item(s) listed under this bid that it deems necessary to accommodate budgetary and/or operational requirements; B. reject any or all bids submitted and further reserves the right to design the evaluation criteria to be used in selecting the lowest and best bid for approval; C. award the bid to one bidder or to multiple bidders if the County determines it is in its best interest to do so; D. award the contract to the responsible bidder who submits the lowest and best bid. "Lowest and best" means a bid or offer providing the best value considering associated direct and indirect costs, including transport, maintenance, reliability, and life cycle, warranties, and customer service after a sale.

4. The Bidder shall not substitute items named in the bid without the express written consent of Hidalgo County. Failure of the delivered item to perform as specified or failure to meet the stated delivery schedule shall release Hidalgo County from all obligations to the contracting party with regard to the item(s) in question. In such event, County may elect to award the contract to the next-lowest responsible bidder, or to reject all bids and re-advertise.

5. For work to be performed at a County owned or operated location, each bidder shall, in its sole discretion, visit the job site before preparing the bid and thoroughly familiarize himself/herself with existing conditions. Bidder should take field dimensions and note all circumstances which affect the dollar amount of the bid.

6. Descriptive specifications are referenced in this document to indicate the general kind and quality of equipment desired by Hidalgo County. Due to various styles and models of equipment, bidders are required to include illustrations, specifications, explanation of warranties, and service data with their bid including catalogue numbers and any necessary references.

7. No bid may be withdrawn within thirty (30) days from the scheduled time to open bids.

8. Proposed prices are to remain firm for a minimum of ninety (90) days after bid opening.

9. Any interpretations, amendments, corrections or changes to this bid document must be in a written addendum and signed by the County Judge or his designee. Addenda will be mailed to all who are known to have received a copy of the Request for Bids. Bidders shall acknowledge receipt of all addenda as a part of their bid.

10. County reserves the right to accept or reject any or all Bids.

11. Costs are to be net F.O.B., County Prepaid.

12. County is exempt from Federal Excise Tax, State Tax and Local Tax. Do Not include tax in cost figure. If it is determined that tax was included in the cost figures it will not be included in the tabulation of any awards. Tax exemption certificates will be furnished upon request.

13. Funds for this procurement have been provided through the County budget for this fiscal year only. County, on an annual basis, has the right to reconsider a contract during the budget process for ensuing years if financial resources of County are insufficient to meet the liabilities of said contract. The award of a bid or contract hereunder will not be construed to create a debt of the County which is payable out of funds beyond the current fiscal year.

14. Upon award and prior to execution of a contract, Sole Proprietorships are required to submit a copy of their social security cards to the Hidalgo County Auditor's Office in order to establish an account with the County. All awarded vendors must submit a completed W-9 and a copy of their Federal ID Number Certificate.

15. DELIVERY INSTRUCTIONS:
    - No deliveries accepted after 3:00 P.M., Monday-Friday.
    - At least seventy two (72) hours prior notice of delivery must be given to Martha L. Salazar, Purchasing Agent before delivery will be accepted.
    - If you need additional information call the office listed below:

      Hidalgo County Purchasing Department
      Martha L. Salazar, Purchasing Agent
      (956) 318-2626

16. BILLING AND PAYMENT INSTRUCTIONS:
    - Invoices must include:
      a) Name and address of successful bidder
      b) Name and address of receiving department or official
      c) Purchase Order Number (if any)

d) Notation - **"HIDALGO COUNTY -"TYPE D HOT MIX ASPHALT (GRAVEL & LIMESTONE".**
Descriptive information as to the items or services delivered, including product code, item number, quantity, etc.

e) Contract number must be indicated on all invoices

- Discount payments will be considered when offered.
- Contact person for Billing and Payment questions:

Hidalgo County Auditor's Office
2808 S. Bus Hwy 281
Edinburg, TX 78542
(956) 318-2511

17. SCHEDULE OF EVENTS

Bid Opening, 9:30 A.M.	MARCH 15, 2017
Award of Contract	_____, 2017
Commence Work or Deliver Products	_____, 2017

18. BID OR PERFORMANCE BOND AND DEBARMENT CERTIFICATION; PAYMENT UNDER CONTRACT:

- If the contract proposed is for the construction of public works or is for a contract for goods & services exceeding $100,000, all bidders shall furnish a good and sufficient bid bond in the amount of five percent of the total contract price. A bid bond must be executed with a surety company authorized to do business in Texas. All bidders are also required to furnish a certification or acknowledgment stating that the contractor or vendor is free from suspension or debarment pursuant to federal regulation 45CFR Part 76. Register at SAMs System for Award Management @ www.sam.gov.

- Together with the signing of a contract or issuance of a purchase order following the acceptance of a bid, and prior to commencement of the actual work, the bidder shall furnish a performance bond to the County for the full amount of the contract, if that contract exceeds $50,000.

- If the contract is for $50,000 or less, no money will be paid to the contractor until completion and acceptance of the work or the fulfillment of the purchase obligation to the County, and, if applicable, the receipt by County of satisfactory evidence that all subcontractors and material men have been paid.

- If a contract is for the construction, alteration or repair of public buildings or public works, the contractor *shall* provide a payment bond for a contract in excess of Twenty Five Thousand Dollars ($25,000.00), as required by Tex. Govt. Code Ch. 2253.

For requirements contracts, bond requirements are determined by applying the proposed unit price to the estimated quantities included in the specifications

19. TITLE VI NOTICE/ NONDISCRIMATION

a. "The County of Hidalgo, in accordance with the provisions of Title VI of the Civil Rights Act of 1964 (78 Stat.252, 42 U.S.C. §§2000d to 2000d-4) and the Regulations, hereby notifies all Bidders that it will affirmatively ensure that any contract entered into pursuant to this advertisement, disadvantaged business enterprises will be afforded full and fair opportunity to submit bids in response to this invitation and will not be discriminated against on the grounds of race, color, or national origin in consideration for an award."

b. The appropriate clauses of Appendices "A" through "E" as delineated in the USDOT Standard Title VI/Nondiscrimination Assurances - Specific Assurances are hereby incorporated by reference as applicable. Title VI Appendices "A" through "E" are attached as **Exhibit "G.**

c. Bidder will attach all applicable notices to which it is obligated to provide or submit as part of the bid, including Form FHWA 1273 to be submitted by all contractors and subcontractors in relation to construction contracts.

20. ETHICAL STANDARDS:

. It shall be a breach of ethics to offer, give or agree to give any elected official, department head or employee, or former elected official, department head or employee, of the County, or for any elected official, department head or employee or former elected official, department head or employee of the County, to solicit, demand, accept or agree to accept from another person, entity or organization, a gratuity or an offer of employment in connection with any decision, approval, disapproval, recommendation, preparation or any part of a program requirement or purchase request, influencing the content of any specification or procurement standard, rendering of advice, investigation, auditing, or in any other advisory capacity in any proceeding or application, request for ruling, determination, claim or controversy, or other particular matter pertaining to any program requirement or a contract or subcontract, or to any solicitation or proposal therefore pending before any department or agency of the County.

. It shall be a breach of ethics for any payment, gratuity or offer of employment to be made by or on behalf of a subcontractor under a contract to the prime contractor or higher tier subcontractor for any contract for the County, or any person associated therewith, as an inducement for the award of a subcontract or order.

. No public official shall have an interest in a contract awarded hereunder except in accordance with Tex. Loc. Govt. Code Chapter 171.

NOTICE:
ALL COMMUNICATIONS BY A VENDOR TO THE COUNTY, ITS OFFICIALS, AND DEPARTMENT HEADS REGARDING THIS PROCUREMENT SHALL BE DONE THROUGH THE HIDALGO COUNTY PURCHASING DEPARTMENT.

21. DISCLOSURE OF CONFLICT OF INTEREST

. Effective January 1, 2016, Chapter 176 of the Texas Local Government Code requires that any vendor, person, consultant or contractor considering doing business with Hidalgo County ("the County") to disclose in the Conflict of Interest Questionnaire (the "CIQ") attached as Exhibit E, the vendor, person, consultant or contractor's affiliation or business relationship that might cause a conflict of interest with the County. By law, the CIQ must be filed with the Hidalgo County Clerk's Office no later than the seventh business day after the date the person

becomes aware of facts that require that statement to be filed. The disclosure requirement applies to a person or business who contracts or seeks to contract with Hidalgo County for the sale or purchase of property, goods or service. Any purchase order or contract resulting from this process shall be considered null and void if the successful bidder fails to comply with Texas Local Government Code Chapter 176. Vendors, consultants, contractors and others who desire to conduct business with Hidalgo County are encouraged to refer to Texas Local Government Code Chapter 176 for the details of this law. An offense under Texas Local Government Code Chapter 176 is a Class C Misdemeanor.

Completed Form CIQ must be submitted to the Hidalgo County Clerk's Office located at 100 N. Closner, Edinburg, Texas 78539 - Hidalgo County Courthouse.

COMPLETION AND SUBMISSION OF FORM CIQ IS THE SOLE RESPONSIBILITY OF THE PROSPECTIVE RESPONDENT. QUESTIONS REGARDING COMPLIANCE SHOULD BE DIRECTED TO YOUR LEGAL COUNSEL.

22. CERTIFICATE OF INTERESTED PARTIES (FORM HB1295)

As of January 1, 2016, to comply with Texas Government Code Section §2252.908, and the rules issued by the Texas Ethics Commission found in Title 1, Section 46.1, 46.3 and 46.5 of the Texas Administrative Code, we have updated and revised our RFB packet. In accordance with these requirements, business must submit a completed Certificate of Interested Parties Form 1295 to the County before the County may enter into a contract with the business entity. In box 3 of Form 1295, you will provide the RFB Project No. (2017-042), as shown on the packet. Once completed and filed with the Texas Ethics Commission, Form 1295 must be printed and signed in the presence of a notary and submitted to our office either by facsimile transmission to (956) 292-7612 or via email to: sandy.suarez@co.hidalgo.tx.us. Hidalgo County cannot enter into a contract until Form 1295 is submitted. Therefore, failure to timely submit Form 1295 signed and notarized may result in delay of award. Full instructions for completion and submittal of Form 1295 may be found on the Texas Ethics Commission website:

https://www.ethics.state.tx.us/tec/1295-Info.htm

THE AWARDED VENDOR WILL HAVE THIRTY (30) DAYS FROM THE DATE THE HIDALGO COUNTY COMMISSIONER'S COURT APPROVES THIS AGREEMENT TO SUBMIT THE SIGNED NOTARIZED FORM 1295. *HIDALGO COUNTY CANNOT ENTER INTO A CONTRACT UNTIL FORM 1295 IS SUBMITTED.*

23. If, during the life of any contract or bid awarded, the successful bidder's net prices generally available to other customers for items awarded herein are reduced below the contracted price, it is understood and agreed that the benefits of such reduction shall be extended to the County.

24. Bids, and all goods and services provided hereunder, shall comply with all federal, state and local laws concerning this type(s) of goods and/or services.

25. Minimum Standards for Responsible Prospective Bidders: A prospective bidder must affirmatively demonstrate bidder's responsibility. A prospective bidder, by submitting a bid, represents to County that it meets the following requirements:
    - Possess or is able to obtain adequate financial resources as required to perform under the bid;
    - Be able to comply with the required or proposed delivery schedule;
    - Have a satisfactory record of performance;
    - Have a satisfactory record of integrity and ethics;
    - Be otherwise qualified and eligible to receive an award.

26. Successful bidder will pay or cause to be paid, without cost or expenses to County, all FICA, FUTA/SUTA and Federal Income Withholding Taxes of all employees, and all wages and benefits as

required by Federal or State law. Successful bidder's officers, agents and/or employees will not be entitled to any benefits of an employee or elected official of County, including, but not limited to, benefits associated with County's civil service system.

27. Any contract award to a successful bidder will be in effect until (a) the contract expires, (b) delivery and acceptance of products, and/or performance of services ordered, or (c) terminated by County with thirty day's written notice prior to cancellation.

28. County reserves the right to enforce performance of any contract awarded hereunder in any manner prescribed by law or deemed to be in the best interest of the County in the event of breach or default by successful bidder; County reserves the right to terminate any contract immediately in the event a successful bidder fails to:

    A. Meet schedules;
    B. Pay any required fees or taxes; or
    C. Otherwise perform in accordance with the specifications.

29. Successful bidder shall defend, indemnify and save harmless County and all its elected officials, officers, agents and employees from all suits, actions, or other claims of any character, name and description brought for or on account of any injuries or damages received or sustained by any person, persons, or property on account of any negligent act or fault of the successful bidder, or of any agent, employee, subcontractor or supplier of successful bidder in the execution of, or performance under, any contract which may result from bid award or which arises from any event or casualty happening on or within County premises themselves or happening upon or in any halls, elevators, entrances, stairways or approaches of or to such County facilities. Successful bidder shall pay any judgment with costs which may be obtained against County growing out of such injury or damages, and shall, upon request, provide a defense to County by counsel reasonably acceptable to County. Successful bidder's indemnity hereunder shall include, but is not limited to, claims relating to patent, copyright or trademark infringement, and the like, arising out of the goods and services provided by successful bidder.

30. Successful bidder shall warrant that all items/services shall conform with the specifications and/or all warranties provided under the Uniform Commercial Code and be free from all defects in material, workmanship and the like. Items supplied under a contract pursuant to this Request for Bids shall be subject to County's approval. Items found to be defective or not meeting specifications shall be replaced by successful bidder within two business days at no expense to County. Items not picked up within one (1) week after notification shall be deemed a donation to County and may be used or disposed of at County's discretion and without waiver of any other rights of County as to the item's nonconformity.

31. This document and any disputes arising hereunder shall be governed and construed according to the laws of the State of Texas, and will be performable exclusively in Hidalgo County, Texas.

32. The successful bidder shall not assign, sell, transfer or convey its rights under any awarded contract, in whole or in part, without the prior written consent of County.

Bid
For
HIDALGO COUNTY
"TPYE D HOT MIX ASPHALT (GRAVEL & LIMESTONE)"
BID NO.: 2017-042-03-15-SGS

To: Martha L. Salazar, CPPB, Purchasing Agent
Physical Address: 2802 S. Business Hwy. 281 - Administration Building
Mailing/Postal Address: 2812 S. Business Hwy. 281
Edinburg, Texas 78539

In accordance with the Specifications, and subject to all laws and regulations of the United States and state and local laws, the undersigned bidder proposes and commits to furnish all labor, equipment, material, software and services as set forth in the documents hereinbefore mentioned. The undersigned bidder further agrees, upon acceptance of its bid, to execute a contract and/or Purchase Order issued by Hidalgo County for performing and completing the work described in the Specifications within the time stated and for the prices proposed in the documents attached hereto and made a part hereof.

Bidder acknowledges receipt of all of the pages of the documents referenced in the Invitation to Bid Checklist presented in connection with this procurement. Bidder understands that Hidalgo County reserves the right to reject any or all bids and further reserves the right to design the evaluation criteria to be used in selecting the lowest and best bid.

Bidder agrees that this bid shall be good and may not be withdrawn for a period of ninety (90) calendar days after the scheduled closing time for receiving bids, as contained in the Specifications.

Respectfully submitted,

Bidder: _____

Address: _____

By: _____

Printed Name: _____

Title: _____

EXHIBIT "A"

SPECIFICATIONS/REQUIREMENTS

HIDALGO COUNTY

(All Funding Sources, Programs & Entities)

"TYPE D HOT MIX ASPHALT-(GRAVEL & LIMESTONE)"

BID NO.: 2017-042-03-15-SGS

PROJECT OVERVIEW:

The intention of this Hidalgo County Request for Bids (RFB) is to solicit bids for a term contract for Type D Hot Mix Asphalt – Gravel & Limestone. All purchases will be on an **"as needed basis"** only.

SPECIFICATIONS:

TYPE D HOT MIX ASPHALT- GRAVEL & LIMESTONE

SPECIAL CONDITIONS:

Measurements and bid shall be per Ton**.** There will be a 4.8% to 5.0% Oil Content in the Mixture. The mixture will be mined & loaded by the owner.

REQUIREMENTS AND OTHER TERMS AND CONDITIONS:

1 It is intended that the amount of "**TYPE D HOT MIX ASPHALT-GRAVEL & LIMESTONE**" needed by Hidalgo County will be purchased on an "**as needed basis**". It shall be agreed & understood that Hidalgo County will purchase no more material than is needed.

2 BID PRICE SHALL BE PER TON

3 Location is an important factor in evaluation of the bids, due to transportation costs which will be taken into consideration if material is picked up at the plant site.

4 When requested, samples shall be furnished free of expense to Hidalgo County.

5 Testing may be performed at the request of Hidalgo County anytime during the length of the contract through an independent testing laboratory.

6 In the event the material furnished does not meet all the above requirements (regardless of weather, test's acceptability, method of repair or other conditions), the County reserves the option to require the material supplier to replace or to reimburse the County for the unused portion of material found to be unsatisfactory.

7 It is expressly understood and agreed that in case Hidalgo County should need **"TYPE D HOT MIX ASPHALT-GRAVEL & LIMESTONE"** and it's not available within the time frame needed from the successful vendor during the term of this contract, Hidalgo County reserves the right to purchase these items from other sources other than the successful vendor and shall not be in violation of any terms or conditions of said contract. Further, Hidalgo County reserves the right to seek another vendor if, at any time, vendor's prices do not conform to public pricing

8 **Term of Contract:** The term of the bid contract will be for a period of one (1) year. Hidalgo County may in its sole discretion elect the *option to extend* the contract for one (1) additional - one (1) year term under the same rates, terms and conditions.

9 Hidalgo County reserves the right to continue this bid for an additional sixty (60) day grace period at the end of the contract term due to any unforeseen delay in the procurement process.

10 County shall have the right to exercise all or portion of the *Options to Extend* in any combination it deems necessary.

11 Hidalgo County reserves the right to reject any/all bids, to waive any/all formalities or technicalities, or to accept the bid considered the best and most advantage to the County

12 Hidalgo County reserves the right to hold bids for a period of ninety (90) days without taking any action

13 Hidalgo County reserves the right to award to ONE or to MULTIPLE vendors, if the County determines it is in its best interest to do so.

14 Any contract award to a successful bidder will be in effect until (a) the contract expires, (b) delivery and acceptance of product, and /or performance of services ordered, or (c) terminated by County with thirty day's written notice prior to cancellation.

15 **All costs and expenses associated with the preparation and submission of (bids, proposals, statements of qualifications (RFQ) and quotes) shall be responsibility of the bidder and no reimbursements for such charges or expenses shall be passed on to HIDALGO COUNTY.**

16 After bid is awarded and successful awarded contractor defaults in meeting the general instructions to bidders(s) and/or in complying with the contract agreement, Hidalgo County reserves the right to seek the services of the next lowest bidder(s). In such event, Hidalgo County shall charge the successful bidder the difference for any additional cost to the County.

17 Continuing non-performance of the bidder(s) in terms of specifications shall be basis for termination of contract by the County. The County shall not pay for work, equipment, or supplies which are unsatisfactory. Bidder(s) will be given a reasonable opportunity before termination to correct the deficiencies.

18 Hidalgo County may utilize "**State Awarded Contracts**" when it is in the County best interest to do so.

19 Insurance Certificates (Exhibit "C") must be submitted to the Purchasing Department for approval prior to any services being performed by the awarded bidder.

20 **Purchase Order:** Contractor will not supply or deliver any items until a purchase order number is assigned by the designated representative of the County Purchasing Office. **Contractor will reference purchase order and contract number on all invoices submitted to the Hidalgo County Auditor.** Failure to act in this manner may result in termination of this contract.

21 The bidder(s) awarded the contract **cannot** engage the services of a **subcontractor without prior written consent of Hidalgo County** to perform services hereunder. The successful bidder(s) must present evidence that the proposed subcontractor possess all the necessary licenses and permits to perform the services and that subcontractor has obtained the required insurance.

MARKET VOLATILITY AND UNIT PRICE ADJUSTMENTS:

Hidalgo County recognizes that during periods of national crisis and unstable economic conditions, unforeseen price increases Might affect costs for goods and services contracted on an annual basis. The following procedure may be employed to mediate price volatility:

1) **Requesting Price Adjustment**: Upon written request of the Vendor to the County Purchasing Agent, the County may review evidence of prevailing industry-wide market conditions that warrant an adjustment in bid prices contained in the contract.

- A Vendor must tie any price change clause to an industry-wide or otherwise nationally recognized index, or some other form of verifiable document. Such written request must be accompanied by a certified copy of the supplier's advisory or notification to the vendor of the price changes.
- The Vendor must put the Purchasing Agent on the mailing lists for such publications so that the Purchasing Agent can monitor said changes. Such membership shall be at no cost to the County.

- The County Purchasing Agent retains the right to determine whether or not such proposed price changes are in the best interest of the County.
- No price escalation will be authorized in excess of the amount of the increase referred to in the supplier's notice.
- The County may only grant a price increase if the evidence presented is deemed reliable. Should the County allow a price increase, the approved price change shall be honored for all orders received by the vendor or contractor after the effective date of such price change. Approved price changes are not applicable to orders already issued and in process at time of price change.

2) **Price Reduction**: Vendor shall notify the County at the time when the Vendor's costs for items and/or supplies reduce due to stabilization in the market at which time prices for items on this contract shall be reduced accordingly. Failure by the Vendor to notify the County of a decrease in costs for items and/or supplies for which the Vendor was granted a price adjustment, may result in immediate termination of this contract and the County shall not be obligated to pay the Vendor the difference between the contract price and the price adjustment.

3) **Timeframe for Adjusted Price Increases:** Price increases are only valid for the quarter in which they are requested and approved. Prices shall return to the original contract price at the beginning of the following quarter unless a Vendor notifies the County in writing within ten (10) days of expiration of the quarter in which the price increase is in effect, that it desires to have the price increase continue or that the Vendor is requesting a different price increase for the following quarter. Such request must be supplemented with sufficient justification to demonstrate that the price increase remains necessary. The County Purchasing Department shall have sole discretion whether to grant the price increase extension. The County too, shall have discretion to unilaterally reduce, eliminate or extend a price adjustment to the Vendor at any time upon written notice from the County to the Vendor demonstrating justification for such reduction, elimination or extension of the price adjustment.

4) **Allowable Review Periods**: Price adjustment reviews may only be requested by the Vendor on a quarterly basis. However, the County may at its own discretion, conduct temporary price adjustment reviews at any time. The County Purchasing Agent and/or the County Auditor reserve the right to audit and/or examine any pertinent books, documents, papers, records or invoices relating directly to the contract transaction in question after reasonable notice and during normal business hours.

5) **Dollar Limit to Price Changes**: The total increase in contract price shall not exceed twenty-five percent (25%) of the original contract price during the contract term.

ADDITIONAL INFORMATION

- Hidalgo County is requesting that any and all questions, inquiries, and clarifications regarding quotes, bids, proposals, or statements of qualifications be addressed to, Martha L. Salazar, CPPB, Purchasing Agent, 2802 S. Bus. Hwy. 281, New Administration Building, Edinburg, Texas 78539. **TELEPHONE INQUIRIES WILL NOT BE ACCEPTED.**

- **ALL WRITTEN INQUIRIES WILL BE ACCEPTED VIA FACSIMILE (956)318-2629 or (956)292-7612 OR VIA E-MAIL TO: sandy.suarez@co.hidalgo.tx.us by NO LATER THAN, MONDAY, MARCH 06, 2017 by 5:00 P.M.** Responses will be sent to all applicants via e-mail by no later than, **WEDNESDAY, MARCH 08, 2017 by 5:00 P.M.**

EXHIBIT "B"
HIDALGO COUNTY
(All funding, programs & entities)
"TYPE D HOT MIX ASPHALT (GRAVEL & LIMESTONE)"
BID NO.: 2017-042-03-15-SGS

BID PAGE

BID PRICE PER TON (GRAVEL): $_____

BID PRICE PER TON (LIMESTONE): $_____

PHYSICAL LOCATION OF PIT(S): _____

_____

_____

_____

_____

Internal use only- Commodity Code: 745-11 Asphalt, pervious Hot Mix, 745-14-Concrete Cold Laid, 745-21- Concrete Hot Laid

BIDDERS INFORMATION

BIDDER/COMPANY NAME: _____

ADDRESS: _____

CITY/STATE/ZIP: _____

PHONE NO/FAX NO: _____

CELL PHONE NO: _____

E-MAIL ADDRESS: _____

AUTHORIZED SIGNATURE: _____

TITLE: _____

TERM: term of the bid contract will be for a period of one (1) year. Hidalgo County may in its sole discretion elect the option to extend the contract for one (1) additional- one (1) year term under the same rates, terms and conditions.

EXHIBIT "C"

Insurance Requirements
Applicable to the Acquisition of Goods and /or Services
(other than Professional Services)

The Bidder awarded the contract shall furnish proof of insurance, which will also include any subcontractor that is subcontracted by the bidder in at least the following limits, to be in place prior to providing any services under this Contract and to continue at all times in force in effect during the term of this Contract:

1. A Five Hundred Thousand Dollar ($500,000.00) Comprehensive General Liability insurance policy providing additional coverage to all underlying liabilities of County.

2. Automobile liability insurance policy with limits of at least Three Hundred Thousand Dollars ($300,000.00) per person and Five Hundred Thousand Dollars ($500,000.00) per occurrence. Coverage should include injury to or death of persons and property damage claims with limits up to Five Hundred Thousand ($500,000.00) arising out of the services provided to County hereunder.

3. Uninsured/Underinsured motorist coverage in an amount equal to the bodily injury limits set forth immediately above;

4. Workers compensation insurance in amounts established by Texas law, unless the Bidder is specifically exempted from the Texas Workers Compensation Act, Texas Labor Code Chapter 401, et. seq.

Hidalgo County will only accept certificates of insurance on an Acord form (as attached hereto). Certificates of insurance naming County as an **additional insured** shall be submitted to County for approval prior to any services being performed by Contractor. Each policy of insurance required hereunder shall extend for a period equivalent to, or longer than the term of the Contract, and any insurer hereunder shall be required to give at least thirty (30) days written notice to the County prior to the cancellation of any such coverage on the termination date, or otherwise. This Contract shall be automatically suspended upon the cancellation, or other termination, of any required policy of insurance hereunder, and such suspension shall continue until evidence adequate replacement coverage is provided to County. If replacement coverage is not provided within thirty (30) days following suspension of the Contract, this Contract shall automatically terminate.

ACORD CERTIFICATE OF INSURANCE

DATE (MM/DD/YY)

PRODUCER

THIS CERTIFICATE IS ISSUED AS A MATTER OF INFORMATION ONLY AND CONFERS NO RIGHTS UPON THE CERTIFICATE HOLDER. THIS CERTIFICATE DOES NOT AMEND, EXTEND OR ALTER THE COVERAGE AFFORDED BY THE POLICIES BELOW.

INSURERS AFFORDING COVERAGE

INSURED

INSURER A:

INSURER B:

INSURER C:

INSURER D:

INSURER E:

COVERAGES

THE POLICIES OF INSURANCE LISTED BELOW HAVE BEEN ISSUED TO THE INSURED NAMED ABOVE FOR THE POLICY PERIOD INDICATED. NOTWITHSTANDING ANY REQUIREMENT, TERM OR CONDITION OF ANY CONTRACT OR OTHER DOCUMENT WITH RESPECT TO WHICH THIS CERTIFICATE MAY BE ISSUED OR MAY PERTAIN, THE INSURANCE AFFORDED BY THE POLICIES DESCRIBED HEREIN IS SUBJECT TO ALL THER TERMS, EXCLUSIONS AND CONDITIONS OF SUCH POLICIES. AGGREGATE LIMITS SHOWN MAY HAVE BEEN REDUCED BY PAID CLAIMS.

INSR LTR	TYPE OF INSURANCE	POLICY NUMBER	POLICY EFFECTIVE DATE (MM/DD/YY)	POLICY EXPIRATION DATE (MM/DD/YY)	LIMITS	
A	**GENERAL LIABILITY** ☐ COMMERCIAL GENERAL LIABILITY ☐☐ CLAIMS MADE OCCUR ☐ OWNER'S & CONT. PROT ☐ OWNER'S PROTECTIVE LIABILITY GEN'L AGGREGATE LIMIT APPLIES PER: ☐ POLICY PROJECT ☐ LOC				EACH OCCURRENCE	$
					FIRE DAMAGE (Any one fire)	$
					MED (Any one person)	$
					PER & ADV INJURY	$
					AL AGGREGATE	$
					ODUCTS – COMP/OP GG	$
B	**AUTOMOBILE LIABILITY** ☐ ANY AUTO ☐ ALL OWNED AUTOS ☐ SCHEDULED AUTOS ☐ HIRED AUTOS ☐ NON-OWNED AUTOS				COMBINED SINGLE LIMIT (Ea accident)	$
					BODILY INJURY (Per person)	$
					BODILY INJURY (Per accident)	$
					PROPERTY DAMAGE (Per accident)	$
	GARAGE LIABILITY ☐ ANY AUTO				AUTO ONLY-EA ACCIDENT	$
					OTHER THAN AUTO ONLY EA ACC	$
					AGG	$
C	**EXCESS LIABILITY** ☐ OCCUR ☐ CLAIMS MADE ☐ DEDUCTIBLE ☐ RETENTION $				EACH OCCURENCE	$
					AGGREGATE	$
						$
						$
						$
D	**WORKERS COMPENSATION AND EMPLOYER'S LIABILITY**				WC STATU- ☐ OTHER TORY LIMITS	
					E.L. EACH ACCIDENT	$
					E.L. DISEASE-EA EMPLOYEE	$
					E.L. DISEASE-POLICY LIMIT	$
	OTHER					

DESCRIPTION OF OPERATIONS / LOCATION / VEHICLES / EXCLUSIONS ADDED BY ENDORSEMENT / SPECIAL PROVISIONS

County of Hidalgo shall be named as additional insured on all Commercial General Liability policies.

CERTIFICATE HOLDER	ADDITIONAL INSURED; INSURER LETTER: _____ CANCELLATION
Hidalgo County **Attn: Purchasing Department** **2812 S Highway Bus. 281** **Edinburg, Texas 78539**	SHOULD ANY OF THE ABOVE DESCRIBED POLICIES BY CANCELLED BEFORE THE EXPIRATION DATE THEREOF, THE ISSUING INSURER WILL ENDEAVOR TO MAIL ***30*** DAYS WRITTEN NOTICE TO THE CERTIFICATE HOLDER NAMED TO THE LEFT, BUT FAILURE TO DO SO SHALL IMPOSE NO OBLIGATION OR LIABILITY OF ANY KIND UPON THE INSURER, ITS AGENTS OR REPRESENTATIVES. AUTHORIZED REPRESENTATIVE

SAMPLE

Insurance Requirement Acknowledgment

I, _____, authorized representative for _____,
Company/Vendor

hereby acknowledge receipt of the County's required insurance limits. Said requirements:

- will be acquired within 10 working days after notification from Purchasing Department of bid awarded by the Hidalgo County Commissioners' Court;
- will acquire additional amounts required to meet the County's requirements within 10 working days after notification from Purchasing Department of bid award by the Hidalgo County Commissioners' Court; currently carry the following:

  Automobile Liability: $_____ General Liability: $_____
- have already been met, see attached copy of insurance certificate.

_____ _____.
Authorized Representative Date

Notice to Bidder:
A certificate of insurance for the required insurance limits shall be provided to the Purchasing Department's Contract Managers in order to qualify for award of bid and to execute a contract between your Company and the County

Failure to provide Certificates of Insurance to the Purchasing Department's Contract Managers will cause the bid award to be rescinded and re-awarded to next lowest bidder. Certificates of Insurance will be monitored and verified on a **quarterly basis** to ensure coverage policy is in place. It is the Company's obligation to maintain the appropriate insurance coverage throughout the term of the contract.

THIS FORM MUST ACCOMPANY BID PACKET

PROJECT REQUIREMENTS ACKNOWLEDGMENT

This is to certify that I, _____, possess all of the APPLICABLE:

1. Licenses: _____.
2. Bond (if applicable)_____
3. Certificates: _____.
4. Permits: _____.
5. Other: _____.

necessary to carry out the required project. Furthermore, I am providing copies of the required documentation so that, if my company is awarded this bid, I may be eligible to enter into a contract with Hidalgo County and proceed to complete the project in a timely manner.

* Any licenses, bonds (if applicable),certificates, permits, etc. which are required must be presented as part of the bid packet in order to expedite the bid evaluation process.

_____ _____.
Authorized Signature Date

_____.
Company

_____.
Address

_____.
City, State, Zip

THIS FORM MUST ACCOMPANY BID PACKET

CONFLICT OF INTEREST QUESTIONNAIRE

For vendor doing business with local governmental entity

FORM CIQ

This questionnaire reflects changes made to the law by H.B. 23, 84th Leg., Regular Session.

This questionnaire is being filed in accordance with Chapter 176, Local Government Code, by a vendor who has a business relationship as defined by Section 176.001(1-a) with a local governmental entity and the vendor meets requirements under Section 176.006(a).

By law this questionnaire must be filed with the records administrator of the local governmental entity not later than the 7th business day after the date the vendor becomes aware of facts that require the statement to be filed. *See* Section 176.006(a-1), Local Government Code.

A vendor commits an offense if the vendor knowingly violates Section 176.006, Local Government Code. An offense under this section is a misdemeanor.

OFFICE USE ONLY

Date Received

1 **Name of vendor who has a business relationship with local governmental entity.**

2 ☐ **Check this box if you are filing an update to a previously filed questionnaire.** (The law requires that you file an updated completed questionnaire with the appropriate filing authority not later than the 7th business day after the date on which you became aware that the originally filed questionnaire was incomplete or inaccurate.)

3 **Name of local government officer about whom the information is being disclosed.**

_____

Name of Officer

4 **Describe each employment or other business relationship with the local government officer, or a family member of the officer, as described by Section 176.003(a)(2)(A). Also describe any family relationship with the local government officer. Complete subparts A and B for each employment or business relationship described. Attach additional pages to this Form CIQ as necessary.**

A. Is the local government officer or a family member of the officer receiving or likely to receive taxable income, other than investment income, from the vendor?

☐ Yes ☐ No

B. Is the vendor receiving or likely to receive taxable income, other than investment income, from or at the direction of the local government officer or a family member of the officer AND the taxable income is not received from the local governmental entity?

☐ Yes ☐ No

5 **Describe each employment or business relationship that the vendor named in Section 1 maintains with a corporation or other business entity with respect to which the local government officer serves as an officer or director, or holds an ownership interest of one percent or more.**

6 ☐ Check this box if the vendor has given the local government officer or a family member of the officer one or more gifts as described in Section 176.003(a)(2)(B), excluding gifts described in Section 176.003(a-1).

7

_____ _____

Signature of vendor doing business with the governmental entity Date

CONFLICT OF INTEREST QUESTIONNAIRE
For vendor doing business with local governmental entity

A complete copy of Chapter 176 of the Local Government Code may be found at http://www.statutes.legis.state.tx.us/Docs/LG/htm/LG.176.htm. For easy reference, below are some of the sections cited on this form.

Local Government Code § 176.001(1-a): "Business relationship" means a connection between two or more parties based on commercial activity of one of the parties. The term does not include a connection based on:

(A) a transaction that is subject to rate or fee regulation by a federal, state, or local governmental entity or an agency of a federal, state, or local governmental entity;

(B) a transaction conducted at a price and subject to terms available to the public; or

(C) a purchase or lease of goods or services from a person that is chartered by a state or federal agency and that is subject to regular examination by, and reporting to, that agency.

Local Government Code § 176.003(a)(2)(A) and (B):

(a) A local government officer shall file a conflicts disclosure statement with respect to a vendor if:

***

(2) the vendor:

(A) has an employment or other business relationship with the local government officer or a family member of the officer that results in the officer or family member receiving taxable income, other than investment income, that exceeds $2,500 during the 12-month period preceding the date that the officer becomes aware that

(i) a contract between the local governmental entity and vendor has been executed; or

(ii) the local governmental entity is considering entering into a contract with the vendor;

(B) has given to the local government officer or a family member of the officer one or more gifts that have an aggregate value of more than $100 in the 12-month period preceding the date the officer becomes aware that:

(i) a contract between the local governmental entity and vendor has been executed; or

(ii) the local governmental entity is considering entering into a contract with the vendor.

Local Government Code § 176.006(a) and (a-1)

(a) A vendor shall file a completed conflict of interest questionnaire if the vendor has a business relationship with a local governmental entity and:

(1) has an employment or other business relationship with a local government officer of that local governmental entity, or a family member of the officer, described by Section 176.003(a)(2)(A);

(2) has given a local government officer of that local governmental entity, or a family member of the officer, one or more gifts with the aggregate value specified by Section 176.003(a)(2)(B), excluding any gift described by Section 176.003(a-1); or

(3) has a family relationship with a local government officer of that local governmental entity.

(a-1) The completed conflict of interest questionnaire must be filed with the appropriate records administrator not later than the seventh business day after the later of:

(1) the date that the vendor:

(A) begins discussions or negotiations to enter into a contract with the local governmental entity; or

(B) submits to the local governmental entity an application, response to a request for proposals or bids, correspondence, or another writing related to a potential contract with the local governmental entity; or

(2) the date the vendor becomes aware:

(A) of an employment or other business relationship with a local government officer, or a family member of the officer, described by Subsection (a);

(B) that the vendor has given one or more gifts described by Subsection (a); or

(C) of a family relationship with a local government officer.

HIDALGO COUNTY
PURCHASING DEPARTMENT
Bidder/Vendor Application

Complete in print or type. Please return this application to the Hidalgo County Purchasing Department thru Facsimile: (956) 318-2629 or (956) 292-7612 in person or regular mail to: 2812 S. Business Hwy. 281 , Edinburg, Texas 78539 or email: purchasing@co.hidalgo.tx.us

Company Name: **Telephone No. ( )**
dba Name:
Legal Name:
Mailing Address : **Fax No. ( )**
Physical Address:
City, State, Zip **Tax I.D. No.**
Remit to Address : **City, State, Zip**
E-Mail Address:
Representative(s) Name(s) & Title(s)
Type of Organization (check one): _____ Individual _____ Partnership _____ Corporation _____Non-Profit _____ LLC _____ Sole Proprietor _____ Other, Specify **State Identification No._____ (Please attached completed W-9 form with this application)** **Federal Identification No. or (if individual) SS No.**
State of Incorporation: _____ Date:_____ Other:
Type of Business (check one): _____ Manufacturer _____ Wholesaler _____ Retailer _____ Broker _____ Distributor _____ Service Organization _____ Other, Specify
Name & Title of Person(s) Authorized to Sign Bids, Proposals, and/or Contracts:
Small and/or Disadvantaged Business Information (check application criteria) **Small Business:** **Disadvantaged Business (At Least 51% Ownership)** ☐ Less than 125,000 annual gross receipt ☐ Black American ☐ Native American ☐ Less than 250,000 annual gross receipt ☐ Hispanic American ☐ Women ☐ Less than 499,000 annual gross receipt ☐ Asian Pacific American ☐ Other ☐ More than 500,000 annual gross receipt **Have you been certified as a HUB or an MBE/WBE source?:** ☐ Yes ☐ No **Indicate Certification No.(s):_____ or are Certificate(s) attached?:** ☐ Yes ☐ No
What type of product(s) is/are solicited by your company?: **Would you like to be provided with specifications for procurements of such products?:** ☐ Yes ☐ No
To Be Completed by the County: Rec'd by (Purchasing):_____ Date Rec'd by (Purchasing): **Date Forwarded Information to Auditor's Office:_____Entry Date: _____ Vendor No.:**

Revised12/14/06

HISTORICALLY UNDERUTILIZED BUSINESS (HUB) DECLARATION

The primary objective of the Hidalgo County HUB Program is to ensure Historically Underutilized Businesses receive a fair and equal opportunity for participation in the County's procurement process. This fact holds true for Services (Professional & Non-Professional), Commodities, and Construction contracts and any subcontracts thereto. The program strongly encourages Prime Contractors to provide subcontracting opportunities to Certified Hub Contractors/Vendors. Our goal for HUB contractor/vendor participation, as well as HUB subcontractor participation is 30%. To be considered as a "Certified HUB Contractor/Vendor" the contractor/vendor must have been certified by, and hold a current and valid certification with any of the three agencies listed below.

Have you been Certified as a HUB or an MBE/WBE source?: ☐Yes ☐ No

If yes, by whom?: ☐ Texas Building & Procurement Commission ☐ Other_____

Indicate Certification No(s).:_____ or Are Certificate(s) Attached?: ☐ Yes ☐ No

---

LIST OF CERTIFIED HUB SUBCONTRACTORS

(Attach additional pages if necessary)

What percentage of the Bid, RFP,or RFQ is to be subcontracted with Certified HUB sources?: _____%
(List HUB Subcontractor information below).

HUB Subcontractor Name: _____ HUB Status:
Certifying Agency (Check all applicable): ☐Texas Building & Procurement Commission ☐ Other
Address: _____ City: _____ State: _____ Zip:
Contact Person: _____ Title: _____ Phone No.: ( )
Subcontract Amount: $_____ Description of Work to be Performed:

HUB Subcontractor Name: _____ HUB Status:
Certifying Agency (Check all applicable): ☐Texas Building & Procurement Commission ☐ Other
Address: _____ City: _____ State: _____ Zip:
Contact Person: _____ Title: _____ Phone No.: ( )
Subcontract Amount: $_____ Description of Work to be Performed:

HUB Subcontractor Name: _____ HUB Status:
Certifying Agency (Check all applicable): ☐Texas Building & Procurement Commission ☐ Other
Address: _____ City: _____ State: _____ Zip:
Contact Person: _____ Title: _____ Phone No.: ( )
Subcontract Amount: $_____ Description of Work to be Performed:

Form **W-9**
(Rev. December 2014)
Department of the Treasury
Internal Revenue Service

Request for Taxpayer Identification Number and Certification

Give Form to the requester. Do not send to the IRS.

Print or type
See Specific Instructions on page 2.

1 Name (as shown on your income tax return). Name is required on this line; do not leave this line blank.

2 Business name/disregarded entity name, if different from above

3 Check appropriate box for federal tax classification; check only **one** of the following seven boxes:

☐ Individual/sole proprietor or single-member LLC ☐ C Corporation ☐ S Corporation ☐ Partnership ☐ Trust/estate

☐ Limited liability company. Enter the tax classification (C=C corporation, S=S corporation, P=partnership) ▶ _____

Note. For a single-member LLC that is disregarded, do not check LLC; check the appropriate box in the line above for the tax classification of the single-member owner.

☐ Other (see instructions) ▶

4 Exemptions (codes apply only to certain entities, not individuals; see instructions on page 3):

Exempt payee code (if any) _____

Exemption from FATCA reporting code (if any) _____

(Applies to accounts maintained outside the U.S.)

5 Address (number, street, and apt. or suite no.)

Requester's name and address (optional)

6 City, state, and ZIP code

7 List account number(s) here (optional)

Part I Taxpayer Identification Number (TIN)

Enter your TIN in the appropriate box. The TIN provided must match the name given on line 1 to avoid backup withholding. For individuals, this is generally your social security number (SSN). However, for a resident alien, sole proprietor, or disregarded entity, see the Part I instructions on page 3. For other entities, it is your employer identification number (EIN). If you do not have a number, see *How to get a TIN* on page 3.

Note. If the account is in more than one name, see the instructions for line 1 and the chart on page 4 for guidelines on whose number to enter.

Social security number

			–		–				

or

Employer identification number

		–							

Part II Certification

Under penalties of perjury, I certify that:

1. The number shown on this form is my correct taxpayer identification number (or I am waiting for a number to be issued to me); and
2. I am not subject to backup withholding because: (a) I am exempt from backup withholding, or (b) I have not been notified by the Internal Revenue Service (IRS) that I am subject to backup withholding as a result of a failure to report all interest or dividends, or (c) the IRS has notified me that I am no longer subject to backup withholding; and
3. I am a U.S. citizen or other U.S. person (defined below); and
4. The FATCA code(s) entered on this form (if any) indicating that I am exempt from FATCA reporting is correct.

Certification instructions. You must cross out item 2 above if you have been notified by the IRS that you are currently subject to backup withholding because you have failed to report all interest and dividends on your tax return. For real estate transactions, item 2 does not apply. For mortgage interest paid, acquisition or abandonment of secured property, cancellation of debt, contributions to an individual retirement arrangement (IRA), and generally, payments other than interest and dividends, you are not required to sign the certification, but you must provide your correct TIN. See the instructions on page 3.

Sign Here Signature of U.S. person ▶ Date ▶

General Instructions

Section references are to the Internal Revenue Code unless otherwise noted.

Future developments. Information about developments affecting Form W-9 (such as legislation enacted after we release it) is at *www.irs.gov/fw9*.

Purpose of Form

An individual or entity (Form W-9 requester) who is required to file an information return with the IRS must obtain your correct taxpayer identification number (TIN) which may be your social security number (SSN), individual taxpayer identification number (ITIN), adoption taxpayer identification number (ATIN), or employer identification number (EIN), to report on an information return the amount paid to you, or other amount reportable on an information return. Examples of information returns include, but are not limited to, the following:

- Form 1099-INT (interest earned or paid)
- Form 1099-DIV (dividends, including those from stocks or mutual funds)
- Form 1099-MISC (various types of income, prizes, awards, or gross proceeds)
- Form 1099-B (stock or mutual fund sales and certain other transactions by brokers)
- Form 1099-S (proceeds from real estate transactions)
- Form 1099-K (merchant card and third party network transactions)
- Form 1098 (home mortgage interest), 1098-E (student loan interest), 1098-T (tuition)
- Form 1099-C (canceled debt)
- Form 1099-A (acquisition or abandonment of secured property)

Use Form W-9 only if you are a U.S. person (including a resident alien), to provide your correct TIN.

If you do not return Form W-9 to the requester with a TIN, you might be subject to backup withholding. See *What is backup withholding?* on page 2.

By signing the filled-out form, you:

1. Certify that the TIN you are giving is correct (or you are waiting for a number to be issued),
2. Certify that you are not subject to backup withholding, or
3. Claim exemption from backup withholding if you are a U.S. exempt payee. If applicable, you are also certifying that as a U.S. person, your allocable share of any partnership income from a U.S. trade or business is not subject to the withholding tax on foreign partners' share of effectively connected income, and
4. Certify that FATCA code(s) entered on this form (if any) indicating that you are exempt from the FATCA reporting, is correct. See *What is FATCA reporting?* on page 2 for further information.

Note. If you are a U.S. person and a requester gives you a form other than Form W-9 to request your TIN, you must use the requester's form if it is substantially similar to this Form W-9.

Definition of a U.S. person. For federal tax purposes, you are considered a U.S. person if you are:

- An individual who is a U.S. citizen or U.S. resident alien;
- A partnership, corporation, company, or association created or organized in the United States or under the laws of the United States;
- An estate (other than a foreign estate); or
- A domestic trust (as defined in Regulations section 301.7701-7).

Special rules for partnerships. Partnerships that conduct a trade or business in the United States are generally required to pay a withholding tax under section 1446 on any foreign partners' share of effectively connected taxable income from such business. Further, in certain cases where a Form W-9 has not been received, the rules under section 1446 require a partnership to presume that a partner is a foreign person, and pay the section 1446 withholding tax. Therefore, if you are a U.S. person that is a partner in a partnership conducting a trade or business in the United States, provide Form W-9 to the partnership to establish your U.S. status and avoid section 1446 withholding on your share of partnership income.

In the cases below, the following person must give Form W-9 to the partnership for purposes of establishing its U.S. status and avoiding withholding on its allocable share of net income from the partnership conducting a trade or business in the United States:

- In the case of a disregarded entity with a U.S. owner, the U.S. owner of the disregarded entity and not the entity;
- In the case of a grantor trust with a U.S. grantor or other U.S. owner, generally, the U.S. grantor or other U.S. owner of the grantor trust and not the trust; and
- In the case of a U.S. trust (other than a grantor trust), the U.S. trust (other than a grantor trust) and not the beneficiaries of the trust.

Foreign person. If you are a foreign person or the U.S. branch of a foreign bank that has elected to be treated as a U.S. person, do not use Form W-9. Instead, use the appropriate Form W-8 or Form 8233 (see Publication 515, Withholding of Tax on Nonresident Aliens and Foreign Entities).

Nonresident alien who becomes a resident alien. Generally, only a nonresident alien individual may use the terms of a tax treaty to reduce or eliminate U.S. tax on certain types of income. However, most tax treaties contain a provision known as a "saving clause." Exceptions specified in the saving clause may permit an exemption from tax to continue for certain types of income even after the payee has otherwise become a U.S. resident alien for tax purposes.

If you are a U.S. resident alien who is relying on an exception contained in the saving clause of a tax treaty to claim an exemption from U.S. tax on certain types of income, you must attach a statement to Form W-9 that specifies the following five items:

1. The treaty country. Generally, this must be the same treaty under which you claimed exemption from tax as a nonresident alien.

2. The treaty article addressing the income.

3. The article number (or location) in the tax treaty that contains the saving clause and its exceptions.

4. The type and amount of income that qualifies for the exemption from tax.

5. Sufficient facts to justify the exemption from tax under the terms of the treaty article.

Example. Article 20 of the U.S.-China income tax treaty allows an exemption from tax for scholarship income received by a Chinese student temporarily present in the United States. Under U.S. law, this student will become a resident alien for tax purposes if his or her stay in the United States exceeds 5 calendar years. However, paragraph 2 of the first Protocol to the U.S.-China treaty (dated April 30, 1984) allows the provisions of Article 20 to continue to apply even after the Chinese student becomes a resident alien of the United States. A Chinese student who qualifies for this exception (under paragraph 2 of the first protocol) and is relying on this exception to claim an exemption from tax on his or her scholarship or fellowship income would attach to Form W-9 a statement that includes the information described above to support that exemption.

If you are a nonresident alien or a foreign entity, give the requester the appropriate completed Form W-8 or Form 8233.

Backup Withholding

What is backup withholding? Persons making certain payments to you must under certain conditions withhold and pay to the IRS 28% of such payments. This is called "backup withholding." Payments that may be subject to backup withholding include interest, tax-exempt interest, dividends, broker and barter exchange transactions, rents, royalties, nonemployee pay, payments made in settlement of payment card and third party network transactions, and certain payments from fishing boat operators. Real estate transactions are not subject to backup withholding.

You will not be subject to backup withholding on payments you receive if you give the requester your correct TIN, make the proper certifications, and report all your taxable interest and dividends on your tax return.

Payments you receive will be subject to backup withholding if:

1. You do not furnish your TIN to the requester,

2. You do not certify your TIN when required (see the Part II instructions on page 3 for details),

3. The IRS tells the requester that you furnished an incorrect TIN,

4. The IRS tells you that you are subject to backup withholding because you did not report all your interest and dividends on your tax return (for reportable interest and dividends only), or

5. You do not certify to the requester that you are not subject to backup withholding under 4 above (for reportable interest and dividend accounts opened after 1983 only).

Certain payees and payments are exempt from backup withholding. See *Exempt payee code* on page 3 and the separate Instructions for the Requester of Form W-9 for more information.

Also see *Special rules for partnerships* above.

What is FATCA reporting?

The Foreign Account Tax Compliance Act (FATCA) requires a participating foreign financial institution to report all United States account holders that are specified United States persons. Certain payees are exempt from FATCA reporting. See *Exemption from FATCA reporting code* on page 3 and the Instructions for the Requester of Form W-9 for more information.

Updating Your Information

You must provide updated information to any person to whom you claimed to be an exempt payee if you are no longer an exempt payee and anticipate receiving reportable payments in the future from this person. For example, you may need to provide updated information if you are a C corporation that elects to be an S corporation, or if you no longer are tax exempt. In addition, you must furnish a new Form W-9 if the name or TIN changes for the account; for example, if the grantor of a grantor trust dies.

Penalties

Failure to furnish TIN. If you fail to furnish your correct TIN to a requester, you are subject to a penalty of $50 for each such failure unless your failure is due to reasonable cause and not to willful neglect.

Civil penalty for false information with respect to withholding. If you make a false statement with no reasonable basis that results in no backup withholding, you are subject to a $500 penalty.

Criminal penalty for falsifying information. Willfully falsifying certifications or affirmations may subject you to criminal penalties including fines and/or imprisonment.

Misuse of TINs. If the requester discloses or uses TINs in violation of federal law, the requester may be subject to civil and criminal penalties.

Specific Instructions

Line 1

You must enter one of the following on this line; **do not** leave this line blank. The name should match the name on your tax return.

If this Form W-9 is for a joint account, list first, and then circle, the name of the person or entity whose number you entered in Part I of Form W-9.

a. **Individual.** Generally, enter the name shown on your tax return. If you have changed your last name without informing the Social Security Administration (SSA) of the name change, enter your first name, the last name as shown on your social security card, and your new last name.

Note. ITIN applicant: Enter your individual name as it was entered on your Form W-7 application, line 1a. This should also be the same as the name you entered on the Form 1040/1040A/1040EZ you filed with your application.

b. **Sole proprietor or single-member LLC.** Enter your individual name as shown on your 1040/1040A/1040EZ on line 1. You may enter your business, trade, or "doing business as" (DBA) name on line 2.

c. **Partnership, LLC that is not a single-member LLC, C Corporation, or S Corporation.** Enter the entity's name as shown on the entity's tax return on line 1 and any business, trade, or DBA name on line 2.

d. **Other entities.** Enter your name as shown on required U.S. federal tax documents on line 1. This name should match the name shown on the charter or other legal document creating the entity. You may enter any business, trade, or DBA name on line 2.

e. **Disregarded entity.** For U.S. federal tax purposes, an entity that is disregarded as an entity separate from its owner is treated as a "disregarded entity." See Regulations section 301.7701-2(c)(2)(iii). Enter the owner's name on line 1. The name of the entity entered on line 1 should never be a disregarded entity. The name on line 1 should be the name shown on the income tax return on which the income should be reported. For example, if a foreign LLC that is treated as a disregarded entity for U.S. federal tax purposes has a single owner that is a U.S. person, the U.S. owner's name is required to be provided on line 1. If the direct owner of the entity is also a disregarded entity, enter the first owner that is not disregarded for federal tax purposes. Enter the disregarded entity's name on line 2, "Business name/disregarded entity name." If the owner of the disregarded entity is a foreign person, the owner must complete an appropriate Form W-8 instead of a Form W-9. This is the case even if the foreign person has a U.S. TIN.

Line 2

If you have a business name, trade name, DBA name, or disregarded entity name, you may enter it on line 2.

Line 3

Check the appropriate box in line 3 for the U.S. federal tax classification of the person whose name is entered on line 1. Check only one box in line 3.

Limited Liability Company (LLC). If the name on line 1 is an LLC treated as a partnership for U.S. federal tax purposes, check the "Limited Liability Company" box and enter "P" in the space provided. If the LLC has filed Form 8832 or 2553 to be taxed as a corporation, check the "Limited Liability Company" box and in the space provided enter "C" for C corporation or "S" for S corporation. If it is a single-member LLC that is a disregarded entity, do not check the "Limited Liability Company" box; instead check the first box in line 3 "Individual/sole proprietor or single-member LLC."

Line 4, Exemptions

If you are exempt from backup withholding and/or FATCA reporting, enter in the appropriate space in line 4 any code(s) that may apply to you.

Exempt payee code.

- Generally, individuals (including sole proprietors) are not exempt from backup withholding.
- Except as provided below, corporations are exempt from backup withholding for certain payments, including interest and dividends.
- Corporations are not exempt from backup withholding for payments made in settlement of payment card or third party network transactions.
- Corporations are not exempt from backup withholding with respect to attorneys' fees or gross proceeds paid to attorneys, and corporations that provide medical or health care services are not exempt with respect to payments reportable on Form 1099-MISC.

The following codes identify payees that are exempt from backup withholding. Enter the appropriate code in the space in line 4.

1—An organization exempt from tax under section 501(a), any IRA, or a custodial account under section 403(b)(7) if the account satisfies the requirements of section 401(f)(2)

2—The United States or any of its agencies or instrumentalities

3—A state, the District of Columbia, a U.S. commonwealth or possession, or any of their political subdivisions or instrumentalities

4—A foreign government or any of its political subdivisions, agencies, or instrumentalities

5—A corporation

6—A dealer in securities or commodities required to register in the United States, the District of Columbia, or a U.S. commonwealth or possession

7—A futures commission merchant registered with the Commodity Futures Trading Commission

8—A real estate investment trust

9—An entity registered at all times during the tax year under the Investment Company Act of 1940

10—A common trust fund operated by a bank under section 584(a)

11—A financial institution

12—A middleman known in the investment community as a nominee or custodian

13—A trust exempt from tax under section 664 or described in section 4947

The following chart shows types of payments that may be exempt from backup withholding. The chart applies to the exempt payees listed above, 1 through 13.

IF the payment is for . . .	THEN the payment is exempt for . . .
Interest and dividend payments	All exempt payees except for 7
Broker transactions	Exempt payees 1 through 4 and 6 through 11 and all C corporations. S corporations must not enter an exempt payee code because they are exempt only for sales of noncovered securities acquired prior to 2012.
Barter exchange transactions and patronage dividends	Exempt payees 1 through 4
Payments over $600 required to be reported and direct sales over $5,000[1]	Generally, exempt payees 1 through 5[2]
Payments made in settlement of payment card or third party network transactions	Exempt payees 1 through 4

[1] See Form 1099-MISC, Miscellaneous Income, and its instructions.

[2] However, the following payments made to a corporation and reportable on Form 1099-MISC are not exempt from backup withholding: medical and health care payments, attorneys' fees, gross proceeds paid to an attorney reportable under section 6045(f), and payments for services paid by a federal executive agency.

Exemption from FATCA reporting code. The following codes identify payees that are exempt from reporting under FATCA. These codes apply to persons submitting this form for accounts maintained outside of the United States by certain foreign financial institutions. Therefore, if you are only submitting this form for an account you hold in the United States, you may leave this field blank. Consult with the person requesting this form if you are uncertain if the financial institution is subject to these requirements. A requester may indicate that a code is not required by providing you with a Form W-9 with "Not Applicable" (or any similar indication) written or printed on the line for a FATCA exemption code.

A—An organization exempt from tax under section 501(a) or any individual retirement plan as defined in section 7701(a)(37)

B—The United States or any of its agencies or instrumentalities

C—A state, the District of Columbia, a U.S. commonwealth or possession, or any of their political subdivisions or instrumentalities

D—A corporation the stock of which is regularly traded on one or more established securities markets, as described in Regulations section 1.1472-1(c)(1)(i)

E—A corporation that is a member of the same expanded affiliated group as a corporation described in Regulations section 1.1472-1(c)(1)(i)

F—A dealer in securities, commodities, or derivative financial instruments (including notional principal contracts, futures, forwards, and options) that is registered as such under the laws of the United States or any state

G—A real estate investment trust

H—A regulated investment company as defined in section 851 or an entity registered at all times during the tax year under the Investment Company Act of 1940

I—A common trust fund as defined in section 584(a)

J—A bank as defined in section 581

K—A broker

L—A trust exempt from tax under section 664 or described in section 4947(a)(1)

M—A tax exempt trust under a section 403(b) plan or section 457(g) plan

Note. You may wish to consult with the financial institution requesting this form to determine whether the FATCA code and/or exempt payee code should be completed.

Line 5

Enter your address (number, street, and apartment or suite number). This is where the requester of this Form W-9 will mail your information returns.

Line 6

Enter your city, state, and ZIP code.

Part I. Taxpayer Identification Number (TIN)

Enter your TIN in the appropriate box. If you are a resident alien and you do not have and are not eligible to get an SSN, your TIN is your IRS individual taxpayer identification number (ITIN). Enter it in the social security number box. If you do not have an ITIN, see *How to get a TIN* below.

If you are a sole proprietor and you have an EIN, you may enter either your SSN or EIN. However, the IRS prefers that you use your SSN.

If you are a single-member LLC that is disregarded as an entity separate from its owner (see *Limited Liability Company (LLC)* on this page), enter the owner's SSN (or EIN, if the owner has one). Do not enter the disregarded entity's EIN. If the LLC is classified as a corporation or partnership, enter the entity's EIN.

Note. See the chart on page 4 for further clarification of name and TIN combinations.

How to get a TIN. If you do not have a TIN, apply for one immediately. To apply for an SSN, get Form SS-5, Application for a Social Security Card, from your local SSA office or get this form online at *www.ssa.gov*. You may also get this form by calling 1-800-772-1213. Use Form W-7, Application for IRS Individual Taxpayer Identification Number, to apply for an ITIN, or Form SS-4, Application for Employer Identification Number, to apply for an EIN. You can apply for an EIN online by accessing the IRS website at *www.irs.gov/businesses* and clicking on Employer Identification Number (EIN) under Starting a Business. You can get Forms W-7 and SS-4 from the IRS by visiting IRS.gov or by calling 1-800-TAX-FORM (1-800-829-3676).

If you are asked to complete Form W-9 but do not have a TIN, apply for a TIN and write "Applied For" in the space for the TIN, sign and date the form, and give it to the requester. For interest and dividend payments, and certain payments made with respect to readily tradable instruments, generally you will have 60 days to get a TIN and give it to the requester before you are subject to backup withholding on payments. The 60-day rule does not apply to other types of payments. You will be subject to backup withholding on all such payments until you provide your TIN to the requester.

Note. Entering "Applied For" means that you have already applied for a TIN or that you intend to apply for one soon.

Caution: *A disregarded U.S. entity that has a foreign owner must use the appropriate Form W-8.*

Part II. Certification

To establish to the withholding agent that you are a U.S. person, or resident alien, sign Form W-9. You may be requested to sign by the withholding agent even if items 1, 4, or 5 below indicate otherwise.

For a joint account, only the person whose TIN is shown in Part I should sign (when required). In the case of a disregarded entity, the person identified on line 1 must sign. Exempt payees, see *Exempt payee code* earlier.

Signature requirements. Complete the certification as indicated in items 1 through 5 below.

1. Interest, dividend, and barter exchange accounts opened before 1984 and broker accounts considered active during 1983. You must give your correct TIN, but you do not have to sign the certification.

2. Interest, dividend, broker, and barter exchange accounts opened after 1983 and broker accounts considered inactive during 1983. You must sign the certification or backup withholding will apply. If you are subject to backup withholding and you are merely providing your correct TIN to the requester, you must cross out item 2 in the certification before signing the form.

3. Real estate transactions. You must sign the certification. You may cross out item 2 of the certification.

4. Other payments. You must give your correct TIN, but you do not have to sign the certification unless you have been notified that you have previously given an incorrect TIN. "Other payments" include payments made in the course of the requester's trade or business for rents, royalties, goods (other than bills for merchandise), medical and health care services (including payments to corporations), payments to a nonemployee for services, payments made in settlement of payment card and third party network transactions, payments to certain fishing boat crew members and fishermen, and gross proceeds paid to attorneys (including payments to corporations).

5. Mortgage interest paid by you, acquisition or abandonment of secured property, cancellation of debt, qualified tuition program payments (under section 529), IRA, Coverdell ESA, Archer MSA or HSA contributions or distributions, and pension distributions. You must give your correct TIN, but you do not have to sign the certification.

What Name and Number To Give the Requester

For this type of account:	Give name and SSN of:
1. Individual	The individual
2. Two or more individuals (joint account)	The actual owner of the account or, if combined funds, the first individual on the account[1]
3. Custodian account of a minor (Uniform Gift to Minors Act)	The minor[2]
4. a. The usual revocable savings trust (grantor is also trustee) b. So-called trust account that is not a legal or valid trust under state law	The grantor-trustee[1] The actual owner[1]
5. Sole proprietorship or disregarded entity owned by an individual	The owner[3]
6. Grantor trust filing under Optional Form 1099 Filing Method 1 (see Regulations section 1.671-4(b)(2)(i)(A))	The grantor*
For this type of account:	**Give name and EIN of:**
7. Disregarded entity not owned by an individual	The owner
8. A valid trust, estate, or pension trust	Legal entity[4]
9. Corporation or LLC electing corporate status on Form 8832 or Form 2553	The corporation
10. Association, club, religious, charitable, educational, or other tax-exempt organization	The organization
11. Partnership or multi-member LLC	The partnership
12. A broker or registered nominee	The broker or nominee
13. Account with the Department of Agriculture in the name of a public entity (such as a state or local government, school district, or prison) that receives agricultural program payments	The public entity
14. Grantor trust filing under the Form 1041 Filing Method or the Optional Form 1099 Filing Method 2 (see Regulations section 1.671-4(b)(2)(i)(B))	The trust

[1] List first and circle the name of the person whose number you furnish. If only one person on a joint account has an SSN, that person's number must be furnished.

[2] Circle the minor's name and furnish the minor's SSN.

[3] You must show your individual name and you may also enter your business or DBA name on the "Business name/disregarded entity" name line. You may use either your SSN or EIN (if you have one), but the IRS encourages you to use your SSN.

[4] List first and circle the name of the trust, estate, or pension trust. (Do not furnish the TIN of the personal representative or trustee unless the legal entity itself is not designated in the account title.) Also see *Special rules for partnerships* on page 2.

*Note. Grantor also must provide a Form W-9 to trustee of trust.

Note. If no name is circled when more than one name is listed, the number will be considered to be that of the first name listed.

Secure Your Tax Records from Identity Theft

Identity theft occurs when someone uses your personal information such as your name, SSN, or other identifying information, without your permission, to commit fraud or other crimes. An identity thief may use your SSN to get a job or may file a tax return using your SSN to receive a refund.

To reduce your risk:

- Protect your SSN,
- Ensure your employer is protecting your SSN, and
- Be careful when choosing a tax preparer.

If your tax records are affected by identity theft and you receive a notice from the IRS, respond right away to the name and phone number printed on the IRS notice or letter.

If your tax records are not currently affected by identity theft but you think you are at risk due to a lost or stolen purse or wallet, questionable credit card activity or credit report, contact the IRS Identity Theft Hotline at 1-800-908-4490 or submit Form 14039.

For more information, see Publication 4535, Identity Theft Prevention and Victim Assistance.

Victims of identity theft who are experiencing economic harm or a system problem, or are seeking help in resolving tax problems that have not been resolved through normal channels, may be eligible for Taxpayer Advocate Service (TAS) assistance. You can reach TAS by calling the TAS toll-free case intake line at 1-877-777-4778 or TTY/TDD 1-800-829-4059.

Protect yourself from suspicious emails or phishing schemes. Phishing is the creation and use of email and websites designed to mimic legitimate business emails and websites. The most common act is sending an email to a user falsely claiming to be an established legitimate enterprise in an attempt to scam the user into surrendering private information that will be used for identity theft.

The IRS does not initiate contacts with taxpayers via emails. Also, the IRS does not request personal detailed information through email or ask taxpayers for the PIN numbers, passwords, or similar secret access information for their credit card, bank, or other financial accounts.

If you receive an unsolicited email claiming to be from the IRS, forward this message to *phishing@irs.gov*. You may also report misuse of the IRS name, logo, or other IRS property to the Treasury Inspector General for Tax Administration (TIGTA) at 1-800-366-4484. You can forward suspicious emails to the Federal Trade Commission at: *spam@uce.gov* or contact them at *www.ftc.gov/idtheft* or 1-877-IDTHEFT (1-877-438-4338).

Visit IRS.gov to learn more about identity theft and how to reduce your risk.

Privacy Act Notice

Section 6109 of the Internal Revenue Code requires you to provide your correct TIN to persons (including federal agencies) who are required to file information returns with the IRS to report interest, dividends, or certain other income paid to you; mortgage interest you paid; the acquisition or abandonment of secured property; the cancellation of debt; or contributions you made to an IRA, Archer MSA, or HSA. The person collecting this form uses the information on the form to file information returns with the IRS, reporting the above information. Routine uses of this information include giving it to the Department of Justice for civil and criminal litigation and to cities, states, the District of Columbia, and U.S. commonwealths and possessions for use in administering their laws. The information also may be disclosed to other countries under a treaty, to federal and state agencies to enforce civil and criminal laws, or to federal law enforcement and intelligence agencies to combat terrorism. You must provide your TIN whether or not you are required to file a tax return. Under section 3406, payers must generally withhold a percentage of taxable interest, dividend, and certain other payments to a payee who does not give a TIN to the payer. Certain penalties may also apply for providing false or fraudulent information.

Certification
Regarding Debarment, Suspension and Ineligibility

As is required by the Federal Regulations Implementing Executive Order 12549, Debarment and Suspension, 45 CFR Part 76, Government-wide Debarment and Suspension, the applicant certifies, to the best of his or her knowledge and belief, that both it and its principals:

a. Are not presently debarred, suspended, proposed for debarment, declared ineligible, or voluntarily excluded from participation in this transaction by any federal department or agency;

b. Have not within a three-year period preceding this bid proposal and/or application been convicted of or had a civil judgment rendered against them for commission of fraud or a criminal offense in connection with obtaining, attempting to obtain, or performing a public (federal, state, or local) transaction or contract under a public transaction, violation of federal or state antitrust statutes or commission of embezzlement, theft, forgery, bribery, falsification or destruction of records, making false statements, or receiving stolen property;

c. Are not presently indicted for or otherwise criminally or civilly charged by a government entity with commission of any of the offenses enumerated herein; and

d. Have not within a three-year period preceding this bid proposal and/or application had one or more public transactions terminated for cause or default.

Signature:_____
Print Name:_____
Title:_____
Telephone Number:_____
Date:_____

If the bidder is unable to certify to all of the statements in this Certification, such bidder should attach an explanation to this proposal.

APPENDIX A

During the performance of this contract, the contractor, for itself, its assignees, and successors in interest (hereinafter referred to as the "contractor") agrees as follows:

1. **Compliance with Regulations**: The contractor (hereinafter includes consultants)will comply with the Acts and the Regulations relative to Nondiscrimination in Federally-assisted programs of the U.S. Department of Transportation, the Federal Highway Administration, as they may be amended from time to time, which are herein incorporated by reference and made a part of this contract.

2. **Nondiscrimination**: The contractor, with regard to the work performed by it during the contract, will not discriminate on the grounds of race, color, or national origin in the selection and retention of subcontractors, including procurements of materials and leases of equipment. The contractor will not participate directly or indirectly in the discrimination prohibited by the Acts and the Regulations, including employment practices when the contract covers any activity, project, or program set forth in Appendix B of49 CFR Part 21.

3. **Solicitations for Subcontracts, Including Procurements of Materials and Equipment**: In all solicitations, either by competitive bidding, or negotiation made by the contractor for work to be performed under a subcontract, including procurements of materials, or leases of equipment, each potential subcontractor or supplier will be notified by the contractor of the contractor's obligations under this contract and the Acts and the Regulations relative to Nondiscrimination on the grounds of race, color, or national origin.

4. **Information and Reports**: The contractor will provide all information and reports required by the Acts, the Regulations, and directives issued pursuant thereto and will permit access to its books, records, accounts, other sources of information, and its facilities as may be determined by the Recipient or the Federal Highway Administration to be pertinent to ascertain compliance with such Acts, Regulations, and instructions. Where any information required of a contractor is in the exclusive possession of another who fails or refuses to furnish the information, the contractor will so certify to the Recipient or the Federal Highway Administration, as appropriate, and will set forth what efforts it has made to obtain the information.

5. **Sanctions for Noncompliance**: In the event of a contractor's noncompliance with the Nondiscrimination provisions of this contract, the Recipient will impose such contract sanctions as it or the Federal Highway Administration may determine to be appropriate, including, but not limited to:

   a. withholding payments to the contractor under the contract until the contractor complies; and/or
   b. cancelling, terminating, or suspending contract, in whole or in part.

6. **Incorporation of Provisions**: The contractor will include the provisions of paragraphs one through six in every subcontract, including procurements of materials and leases of equipment, unless exempt by the Acts, the Regulations and directives issued pursuant thereto. The contractor will take action with respect to any subcontract or procurement as the Recipient or the Federal Highway Administration may direct as a means of enforcing such provisions including sanctions for noncompliance. Provided, that if the contractor becomes involved in, or is threatened with litigation by a subcontractor, or supplier because of such direction, the contractor may request the Recipient to enter into any litigation to protect the interests of the Recipient. In addition, the contractor may request the United States to enter into the litigation to protect the interests of the United States.

APPENDIX B

CLAUSES FOR DEEDS TRANSFERRING UNITED STATES PROPERTY

The following clauses will be included in deeds effecting or recording the transfer of real property, structures, or improvements thereon, or granting interest therein from the United States pursuant to the provisions of Assurance 4:

NOW, THEREFORE, the U.S. Department of Transportation as authorized by law and upon the condition that the **COUNTY OF HIDALGO** will accept title to the lands and maintain the project constructed thereon in accordance with all applicable federal statutes, the Regulations for the Administration of all Department of Transportation programs, and the policies and procedures prescribed by the Federal Highway Administration of the U.S. Department of Transportation in accordance and in compliance with all requirements imposed by Title 49, Code of Federal Regulations, U.S. Department of Transportation, Subtitle A, Office of the Secretary, Part 21, Nondiscrimination in Federally-assisted programs of the U.S. Department of Transportation pertaining to and effectuating the provisions of Title VI of the Civil Rights Act of 1964 (78 Stat. 252; 42 U.S.C. § 2000d to 2000d-4), does hereby remise, release, quitclaim and convey unto the **COUNTY OF HIDALGO** all the right, title and interest of the U.S. Department of Transportation in and to said lands described in Exhibit 1 attached hereto and made a part hereof.

(HABENDUM CLAUSE)

TO HAVE AND TO HOLD said lands and interests therein unto **COUNTY OF HIDALGO** and its successors forever, subject, however, to the covenants, conditions, restrictions and reservations herein contained as follows, which will remain in effect for the period during which the real property or structures are used for a purpose for which Federal financial assistance is extended or for another purpose involving the provision of similar services or benefits and will be binding on the **COUNTY OF HIDALGO**, its successors and assigns.

The **COUNTY OF HIDALGO**, in consideration of the conveyance of said lands and interests in lands, does hereby covenant and agree as a covenant running with the land for itself, its successors and assigns, that (1) no person will on the grounds of race, color, or national origin, be excluded from participation in, be denied the benefits of, or be otherwise subjected to discrimination with regard to any facility located wholly or in part on, over ,or under such lands hereby conveyed [,] [and]* (2) that the **COUNTY OF HIDALGO** will use the lands and interests in lands and interests in lands so conveyed, in compliance with all requirements imposed by or pursuant to Title 49, Code of Federal Regulations, U.S. Department of Transportation, Subtitle A, Office of the Secretary, Part 21, Nondiscrimination in Federally-assisted programs of the U.S. Department of Transportation, Effectuation of Title VI of the Civil Rights Act of 1964, and as said Regulations and Acts may be amended[, and(3) that in the event of breach of any of the above-mentioned nondiscrimination conditions, the Department will have a right to enter or re-enter said lands and facilities on said land ,and that above described land and facilities will thereon revert to and vest in and become the absolute property of the U.S. Department of Transportation and its assigns as such interest existed prior to this instruction].*

(*Reverted clause and related language to be used only when it is determined that such a clause is necessary in order to make clear the purpose of Title VI.)

APPENDIX C

CLAUSES FOR TRANSFER OF REAL PROPERTY ACQUIRED OR IMPROVED UNDER THE ACTIVITY, FACILITY, OR PROGRAM

The following clauses will be included in deeds, licenses, leases, permits, or similar instruments entered into by the **COUNTY OF HIDALGO** pursuant to the provisions of Assurance 7(a):

A. The (grantee, lessee, permittee, etc. as appropriate) for himself/herself, his/her heirs, personal representatives, successors in interest, and assigns, as a part of the consideration hereof, does hereby covenant and agree [in the case of deeds and leases add "as a covenant running with the land"] that:

   1. In the event facilities are constructed, maintained, or otherwise operated on the property described in this (deed, license, lease, permit, etc.) for a purpose for which a U.S. Department of Transportation activity, facility, or program is extended or for another purpose involving the provision of similar services or benefits, the (grantee, licensee, lessee, permitted, etc.) will maintain and operate such facilities and services in compliance with all requirements imposed by the Acts and Regulations (as may be amended)such that no person on the grounds of race, color, or national origin, will be excluded from participation in, denied the benefits of, or be otherwise subjected to discrimination in the use of said facilities.

B. With respect to licenses, leases, permits, etc., in the event of breach of any of the above Nondiscrimination covenants, **COUNTY OF HIDALGO** will have the right to terminate the (lease, license, permit, etc.) and to enter, re-enter, and repossess said lands and facilities thereon, and hold the same as if the (lease, license, permit, etc.) had never been made or issued.*

C. With respect to a deed, in the event of breach of any of the above Nondiscrimination covenants, the **COUNTY OF HIDALGO** will have the right to enter or re-enter the lands and facilities thereon, and the above described lands and facilities will there upon revert to and vest in and become the absolute property of the **COUNTY OF HIDALGO** and its assigns.*

(*Reverted clause and related language to be used only when it is determined that such a clause is necessary in order to make clear the purpose of Title VI.)

APPENDIX D

CLAUSES FOR CONSTRUCTION/USE/ACCESS TO REAL PROPERTY ACQUIRED UNDER THE ACTIVITY, FACILITY OR PROGRAM

The following clauses will be included in deeds, licenses, permits, or similar instruments/agreements entered into by **COUNTY OF HIDALGO** pursuant to the provisions of Assurance 7(b):

A. The (grantee, licensee, permittee, etc., as appropriate) for himself/herself, his/her heirs, personal representatives, successors in interest, and assigns, as a part of the consideration hereof, does hereby covenant and agree (in the case of deeds and leases add, "as a covenant running with the land") that (1) no person on the ground of race, color ,or national origin, will be excluded from participation in, denied the benefits of, or be otherwise subjected to discrimination in the use of said facilities, (2) that in the construction of any improvements on, over, or under such land, and the furnishing of services thereon, no person on the ground of race, color, or national origin, will be excluded from participation in, denied the benefits of, or otherwise be subjected to discrimination, (3) that the (grantee, licensee, lessee, permittee, etc.) will use the premises in compliance with all other requirements imposed by or pursuant to the Acts and Regulations, as amended, set forth in this Assurance.

B. With respect to (licenses, leases, permits, etc.), in the event of breach of any of the above Nondiscrimination covenants, **COUNTY OF HIDALGO** will have the right to terminate the (license, permit, etc., as appropriate) and to enter or re-enter and repossess said land and the facilities thereon, and hold the same as if said(license, permit, etc., as appropriate) had never been made or issued.*

C. With respect to deeds, in the event of breach of any of the above Nondiscrimination covenants, **COUNTY OF HIDALGO** will there upon revert to and vest in and become the absolute property of **COUNTY OF HIDALGO** and its assigns.*

(*Reverted clause and related language to be used only when it is determined that such a clause is necessary in order to make clear the purpose of Title VI.)

APPENDIX E

During the performance of this contract, the contractor, for itself, its assignees, and successors in interest (hereinafter referred to as the "contractor") agrees to comply with the following nondiscrimination statutes and authorities; including but not limited to:

Pertinent Nondiscrimination Authorities:

- Title VI of the Civil Rights Act of 1964 (42 U.S.C. § 2000d et seq., 78 stat. 252), (prohibits discrimination on the basis of race, color, national origin); and 49CFR Part 21.
- The Uniform Relocation Assistance and Real Property Acquisition Policies Act of1970, (42U.S.C. § 4601), (prohibits unfair treatment of persons displaced or whose property has been acquired because of Federal or Federal-aid programs and projects);
- Federal-Aid Highway Act of 1973, (23U.S.C. § 324et seq.), (prohibits discrimination on the basis of sex);
- Section 504 of the Rehabilitation Act of 1973, (29U.S.C. § 794 et seq.), as amended, (prohibits discrimination on the basis of disability); and 49CFRPart 27;
- The Age Discrimination Act of 1975, as amended,(42U.S.C. § 6101 et seq.), (prohibits discrimination on the basis of age);
- Airport and Airway Improvement Act of 1982, (49U.S.C. § 4 71, Section 4 7123),as amended, (prohibits discrimination based on race, creed, color, national origin, or sex);
- The Civil Rights Restoration Act of 1987,(PL 100-209), (Broadened the scope, coverage and applicability of Title VI of the Civil Rights Act of 1964, The Age Discrimination Act of 1975 and Section 504 of the Rehabilitation Act of 1973, by expanding the definition of the terms "programs or activities" to include all of the programs or activities of the Federal-aid recipients, sub recipients and contractors, whether such programs or activities are Federally funded or not);
- Titles II and III of the Americans with Disabilities Act, which prohibit discrimination on the basis of disability in the operation of public entities, public and private transportation systems, places of public accommodation, and certain testing entities (42 U.S.C. §§ 12131-12189)as implemented by Department of Transportation regulations at 49C.F.R. parts 37 and 38;
- The Federal Aviation Administration's Nondiscrimination statute (49U.S.C. § 47123) (prohibits discrimination on the basis of race, color, national origin, and sex);
- Executive Order 12898, Federal Actions to Address Environmental Justice in Minority Populations and Low-Income Populations, which ensures discrimination against minority populations by discouraging programs, policies, and activities with disproportionately high and adverse human health or environmental effects on minority and low-income populations;
- Executive Order 13166, Improving Access to Services for Persons with Limited English Proficiency, and resulting agency guidance, national origin discrimination includes discrimination because of limited English proficiency (LEP). To ensure compliance with Title VI, you must take reasonable steps to ensure that LEP persons have meaningful access to your programs (70 Fed. Reg. at 74087 to 74100);
- Title IX of the Education Amendments of1972, as amended, which prohibits you from discriminating because of sex in education programs or activities (20 U .S.C. 1681 et seq).

HIDALGO COUNTY
(Including all funding sources, programs, and entities)
REQUEST FOR BIDS
PROJECT TITLE

RFB No.: 2017-040-03-15-SGS

RFB SUBMITTAL CHECK LIST

All forms listed below must be included in the RFB response.

Indicate with a check mark (✓) the Forms completed and included in this response:

_____ Page 8 of Legal Notice

_____ Exhibit "B" Bid Page

_____ Exhibit "C" -Acknowledgement forms

_____ Exhibit "D" -CIQ Form -Copy of County Clerk File Recording fee receipt. (if applicable)

_____ Exhibit "E" Vendor Bidder Applications and IRS form W-9

_____ Exhibit "F" Certification Regarding Debarment

_____ SAMS.gov Registration Acknowledgement www.sam.gov

_____ One (1) Original, Three (3) Copies of Bid(s) (see number 2 of Legal Notice).

EXHIBIT “B”

BID PAGE

EXHIBIT "B"
HIDALGO COUNTY
(All funding, programs & entities)
"TYPE D HOT MIX ASPHALT (GRAVEL & LIMESTONE)"
BID NO.: 2017-042-03-15-SGS

OPENED 9:30 3-15-17

BID PAGE

Witnessed

BID PRICE PER TON (GRAVEL): $ 47.70 / TON

BID PRICE PER TON (LIMESTONE): $ 47.70 / TON

PHYSICAL LOCATION OF PIT(S):

La Joya Plant: 2 miles N of US 83 on FM 2221

Progresso Plant: 1/4 mile E of FM 1015 on US MIL 281

Internal use only- Commodity Code: 745-11 Asphalt, pervious Hot Mix, 745-14-Concrete Cold Laid, 745-21- Concrete Hot Laid

BIDDERS INFORMATION

BIDDER/COMPANY NAME: Frontera Materials, INC.
ADDRESS: PO Box 1449
CITY/STATE/ZIP: Elsa TX 78543
PHONE NO/FAX NO: 956-316-8952 / FAX 316-8905
CELL PHONE NO: 956-607-5965
E-MAIL ADDRESS: barry@fmitex.com
AUTHORIZED SIGNATURE: Barry M Ehlers
TITLE: Materials Mgr.

TERM: term of the bid contract will be for a period of one (1) year. Hidalgo County may in its sole discretion elect the option to extend the contract for one (1) additional- one (1) year term under the same rates, terms and conditions.

Bid
For
HIDALGO COUNTY
"TPYE D HOT MIX ASPHALT (GRAVEL & LIMESTONE)"
BID NO.: 2017-042-03-15-SGS

To: Martha L. Salazar, CPPB, Purchasing Agent
Physical Address: 2802 S. Business Hwy. 281 - Administration Building
Mailing/Postal Address: 2812 S. Business Hwy. 281
Edinburg, Texas 78539

In accordance with the Specifications, and subject to all laws and regulations of the United States and state and local laws, the undersigned bidder proposes and commits to furnish all labor, equipment, material, software and services as set forth in the documents hereinbefore mentioned. The undersigned bidder further agrees, upon acceptance of its bid, to execute a contract and/or Purchase Order issued by Hidalgo County for performing and completing the work described in the Specifications within the time stated and for the prices proposed in the documents attached hereto and made a part hereof.

Bidder acknowledges receipt of all of the pages of the documents referenced in the Invitation to Bid Checklist presented in connection with this procurement. Bidder understands that Hidalgo County reserves the right to reject any or all bids and further reserves the right to design the evaluation criteria to be used in selecting the lowest and best bid.

Bidder agrees that this bid shall be good and may not be withdrawn for a period of ninety (90) calendar days after the scheduled closing time for receiving bids, as contained in the Specifications.

Respectfully submitted,

Bidder: Frontera Materials, Inc
Address: PO Box 1449, Elsa TX 78543
By: Barry M Ehlinger
Printed Name: Barry M Ehlinger
Title: Materials Mgr

EXHIBIT "C"

CERTIFICATE OF INSURANCE

CERTIFICATE OF LIABILITY INSURANCE

DATE (MM/DD/YYYY): 8/31/2016

THIS CERTIFICATE IS ISSUED AS A MATTER OF INFORMATION ONLY AND CONFERS NO RIGHTS UPON THE CERTIFICATE HOLDER. THIS CERTIFICATE DOES NOT AFFIRMATIVELY OR NEGATIVELY AMEND, EXTEND OR ALTER THE COVERAGE AFFORDED BY THE POLICIES BELOW. THIS CERTIFICATE OF INSURANCE DOES NOT CONSTITUTE A CONTRACT BETWEEN THE ISSUING INSURER(S), AUTHORIZED REPRESENTATIVE OR PRODUCER, AND THE CERTIFICATE HOLDER.

IMPORTANT: If the certificate holder is an ADDITIONAL INSURED, the policy(ies) must be endorsed. If SUBROGATION IS WAIVED, subject to the terms and conditions of the policy, certain policies may require an endorsement. A statement on this certificate does not confer rights to the certificate holder in lieu of such endorsement(s).

PRODUCER	CONTACT NAME: Consuelo Cavazos, CISR
McAfee Insurance Agency P. O. Box 625 321 Second Street Mercedes TX 78570	PHONE (A/C, No, Ext): (956) 565-2481 FAX (A/C, No): (956) 565-2733 E-MAIL ADDRESS: consuelo@mcafeeagency.com
INSURED	INSURER(S) AFFORDING COVERAGE / NAIC #
Frontera Materials, Inc. P O Box 1449 Elsa TX 78543-1449	INSURER A: Phoenix Insurance Co. INSURER B: The Chapter Oak Fire Ins Co INSURER C: The Travelers Indemnity Company of INSURER D: The Travelers Indemnity Company INSURER E: INSURER F:

COVERAGES CERTIFICATE NUMBER: 2016-2017 REVISION NUMBER:

THIS IS TO CERTIFY THAT THE POLICIES OF INSURANCE LISTED BELOW HAVE BEEN ISSUED TO THE INSURED NAMED ABOVE FOR THE POLICY PERIOD INDICATED. NOTWITHSTANDING ANY REQUIREMENT, TERM OR CONDITION OF ANY CONTRACT OR OTHER DOCUMENT WITH RESPECT TO WHICH THIS CERTIFICATE MAY BE ISSUED OR MAY PERTAIN, THE INSURANCE AFFORDED BY THE POLICIES DESCRIBED HEREIN IS SUBJECT TO ALL THE TERMS, EXCLUSIONS AND CONDITIONS OF SUCH POLICIES. LIMITS SHOWN MAY HAVE BEEN REDUCED BY PAID CLAIMS.

INSR LTR	TYPE OF INSURANCE	ADDL INSD	SUBR WVD	POLICY NUMBER	POLICY EFF (MM/DD/YYYY)	POLICY EXP (MM/DD/YYYY)	LIMITS	
A	X COMMERCIAL GENERAL LIABILITY CLAIMS-MADE [X] OCCUR GEN'L AGGREGATE LIMIT APPLIES PER: [X] POLICY [ ] PRO-JECT [ ] LOC OTHER:			Y-660-1C405755-PHX-16	9/1/2016	9/1/2017	EACH OCCURRENCE DAMAGE TO RENTED PREMISES (Ea occurrence) MED EXP (Any one person) PERSONAL & ADV INJURY GENERAL AGGREGATE PRODUCTS - COMP/OP AGG Employee Benefits	$ 1,000,000 $ 100,000 $ 5,000 $ 1,000,000 $ 2,000,000 $ 2,000,000 $ 1,000,000
B	AUTOMOBILE LIABILITY [X] ANY AUTO ALL OWNED AUTOS [ ] SCHEDULED AUTOS [X] HIRED AUTOS [X] NON-OWNED AUTOS			BA-5D227668-16-CAG	9/1/2016	9/1/2017	COMBINED SINGLE LIMIT (Ea accident) BODILY INJURY (Per person) BODILY INJURY (Per accident) PROPERTY DAMAGE (Per accident)	$ 1,000,000 $ $ $ $
C	[X] UMBRELLA LIAB [X] OCCUR EXCESS LIAB [ ] CLAIMS-MADE DED [X] RETENTION $ 10,000			YSM-CUP-1C405687-TCT-16	9/1/2016	9/1/2017	EACH OCCURRENCE AGGREGATE	$ 2,000,000 $ 2,000,000 $
D	WORKERS COMPENSATION AND EMPLOYERS' LIABILITY ANY PROPRIETOR/PARTNER/EXECUTIVE OFFICER/MEMBER EXCLUDED? Y/N [ ] (Mandatory in NH) If yes, describe under DESCRIPTION OF OPERATIONS below	N/A		YCUB-1C40567-5-16	9/1/2016	9/1/2017	PER STATUTE / OTH-ER E.L. EACH ACCIDENT E.L. DISEASE - EA EMPLOYEE E.L. DISEASE - POLICY LIMIT	 $ 1,000,000 $ 1,000,000 $ 1,000,000

DESCRIPTION OF OPERATIONS / LOCATIONS / VEHICLES (ACORD 101, Additional Remarks Schedule, may be attached if more space is required)

CERTIFICATE HOLDER

Hidalgo County
100 N Closner Blvd
Edinburg, TX 78539

CANCELLATION

SHOULD ANY OF THE ABOVE DESCRIBED POLICIES BE CANCELLED BEFORE THE EXPIRATION DATE THEREOF, NOTICE WILL BE DELIVERED IN ACCORDANCE WITH THE POLICY PROVISIONS.

AUTHORIZED REPRESENTATIVE

Robert R Garza/CO

© 1988-2014 ACORD CORPORATION. All rights reserved.

The ACORD name and logo are registered marks of ACORD

Zimbra **leticia.saenz@co.hidalgo.tx.us**

RE: Review & Approve as to form-Contract # C-17-042-05-30-Frontera Material Inc (Limestone Only)-Hid Co

---

From : Steve Crain <scrain@atlashall.com> Tue, May 16, 2017 05:44 PM

Subject : RE: Review & Approve as to form-Contract # C-17-042-05-30-Frontera Material Inc (Limestone Only)-Hid Co

1 attachment

To : 'Leticia H. Saenz' <leticia.saenz@co.hidalgo.tx.us>

The contract is OK.

From: Leticia H. Saenz [mailto:leticia.saenz@co.hidalgo.tx.us]
Sent: Tuesday, May 16, 2017 5:10 PM
To: Steve Crain <scrain@atlashall.com>
Cc: Marynel Trevino <mntrevino@atlashall.com>; Sandy Suarez <sandy.suarez@co.hidalgo.tx.us>; Darlene H. Betancourt <darlene.betancourt@co.hidalgo.tx.us>
Subject: Review & Approve as to form-Contract # C-17-042-05-30-Frontera Material Inc (Limestone Only)-Hid Co

Good afternoon, Mr. Crain-
Please review and approve as to form agreement **#C-17-042-05-30** with **Frontera Material Inc**. for the purposes of awarding the "**Limestone"** product **[Only]** under this bid for **Hidalgo County .**

Note: will be placed on then next CC agenda for final approval.

Please advise.

Respectfully,

Leticia H. Saenz, CPPB/Contracts Manager
Hidalgo County Purchasing Department
2812 South Business Highway 281
Edinburg, Texas 78539
P(956) 318-2626 **F**(956) 318-2629
Email: leticia.saenz@co.hidalgo.tx.us

CERTIFICATE OF INTERESTED PARTIES

FORM 1295

Complete Nos. 1 - 4 and 6 if there are interested parties.
Complete Nos. 1, 2, 3, 5, and 6 if there are no interested parties.

OFFICE USE ONLY
CERTIFICATION OF FILING

Certificate Number:
2017-210014

Date Filed:
05/18/2017

Date Acknowledged:

1 Name of business entity filing form, and the city, state and country of the business entity's place of business.

Frontera Materials, Inc.
Elsa, TX United States

2 Name of governmental entity or state agency that is a party to the contract for which the form is being filed.

Hidalgo County

3 Provide the identification number used by the governmental entity or state agency to track or identify the contract, and provide a description of the services, goods, or other property to be provided under the contract.

2017-042
type d hot mix asphalt-limestone

4 Name of Interested Party	City, State, Country (place of business)	Nature of Interest (check applicable)	
		Controlling	Intermediary

5 Check only if there is NO Interested Party. [X]

6 AFFIDAVIT

I swear, or affirm, under penalty of perjury, that the above disclosure is true and correct.

LIZ GONZALEZ
Notary Public
STATE OF TEXAS
My Comm. Exp. 05-22-2018

Barry M Ehlinger

Signature of authorized agent of contracting business entity

AFFIX NOTARY STAMP / SEAL ABOVE

Sworn to and subscribed before me, by the said Barry Ehlinger, this the 18th day of May, 20 17, to certify which, witness my hand and seal of office.

Liz Gonzalez — Accts Recievable

Signature of officer administering oath | Printed name of officer administering oath | Title of officer administering oath

CERTIFICATE OF INTERESTED PARTIES

FORM 1295

Complete Nos. 1 - 4 and 6 if there are interested parties.
Complete Nos. 1, 2, 3, 5, and 6 if there are no interested parties.

OFFICE USE ONLY
CERTIFICATION OF FILING

Certificate Number:
2017-210014

Date Filed:
05/18/2017

Date Acknowledged:
05/18/2017

1 Name of business entity filing form, and the city, state and country of the business entity's place of business.
Frontera Materials, Inc.
Elsa, TX United States

2 Name of governmental entity or state agency that is a party to the contract for which the form is being filed.
Hidalgo County

3 Provide the identification number used by the governmental entity or state agency to track or identify the contract, and provide a description of the services, goods, or other property to be provided under the contract.
2017-042
type d hot mix asphalt-limestone

4 Name of Interested Party	City, State, Country (place of business)	Nature of interest (check applicable)	
		Controlling	Intermediary

5 Check only if there is NO Interested Party. [X]

6 AFFIDAVIT

I swear, or affirm, under penalty of perjury, that the above disclosure is true and correct.

_____
Signature of authorized agent of contracting business entity

AFFIX NOTARY STAMP / SEAL ABOVE

Sworn to and subscribed before me, by the said _____, this the _____ day of _____, 20_____, to certify which, witness my hand and seal of office.

_____ _____ _____
Signature of officer administering oath | Printed name of officer administering oath | Title of officer administering oath

AI-59913 **Purchasing Department** **22. B. 2.**

CC - REGULAR

Meeting Date: 05/30/2017

Submitted For: Marty Salazar, PURCHASING DEPT.

Submitted By: Yvette Salinas, PURCHASING DEPT.

Department: PURCHASING DEPT.

Information

CAPTION

Acceptance and approval to exercise the County's option to extend the final one (1) year renewal allowed under contract #E-16-125-03-22 under the same rates, terms and conditions with Gulf Data Products for the provision of "General Printing Services and Related Supplies" effective June 15, 2017 to June 14, 2018.

BACKGROUND

Fiscal Impact

CALENDAR YEAR: 2017 **ACCT. #:** obj. 550 countywide

FUNDS AVAILABLE Y/N?: Y **MATCHING FUNDS Y/N?:**

BUDGETARY IMPACT:

Contract to be used by various departments/precincts on an "as needed" basis.
Possible funding source is obj. 550 "Printing & Binding"
Refer to attached expense report for funds availability as of 5-23-17.

Attachments

back up 59913
Obj. 550 Exp. Report 5-23-17

Form Review

Inbox	Reviewed By	Date
Purchasing - Internal	Marty Salazar	05/22/2017 02:46 PM
Budget & Management	Veronica Ortiz	05/22/2017 03:37 PM
Ivan Cantu	Ivan Cantu	05/23/2017 02:31 PM
Final Approval	Monica Salinas	05/26/2017 02:58 PM
Form Started By: Yvette Salinas		Started On: 05/17/2017 03:05 PM
Final Approval Date: 05/26/2017		

Hidalgo County Purchasing Department
2812 S. Business Highway 281
Edinburg, Texas 78539
(956) 318-2626/ Fax: (956) 318-2629

May 12, 2017

Mr. Kevin Kanipe
Gulf Data Products
810 E. Harrison
Harlingen, Texas 78550
(956) 421-5711

via email: gulfdata@sbcglobal.net

Re: HB Form 1295 Required/Renewal/Extension Notice
Extension# E-17-166-GENERAL PRINTING SERVICES AND RELATED SUPPLIES-Hidalgo County (Current/Expiring Contract# E-16-125-03-22)

Dear Mr. Kanipe,

Be advised, that in order to proceed with the County's option to extend/renew for an additional **One (1) Year term, under the same rates, terms and conditions** with **E.A Stone, inc. dba Gulf Data Products** for the referenced project, the County is required, as of **January 1, 2016**, to comply with the **Texas Government Code, §2252.908,** and the rules issued by the **Texas Ethics Commission** found in Title 1, Section 46.1, 46.3 and 46.5 of the Texas Administrative Code. In accordance with these requirements for the type of contract being considered, a business must submit a completed **Certificate of Interested Parties Form 1295**, to the County before the County may enter into a contract with the business entity.

Thus, in order for County staff to process the above referenced extension/renewal; you must complete Form 1295 and file Form 1295 with the Texas Ethics Commission. You can find the 1295 Form through the Texas Ethics Commission at the following website:

https://www.ethics.state.tx.us/whatsnew/elf_info_form1295.htm

In box 3 of **Form 1295**, provide **Renewal/Extension No. E-17-166**. Once completed and filed with the Texas Ethics Commission, Form 1295 must be printed and signed in the presence of a notary and submitted to our office by the deadline stated below.

In order to proceed with approval of **Renewal/Extension** for referenced project by **Commissioners Court May 30th, 2017 or before**, the signed notarized **"HB Form 1295"** and **"Extension Notice"** must be received in our office completed via email to: yvette.salinas@co.hidalgo.tx.us **by no later than Thursday, May 18, 2017.** Hidalgo County cannot enter into a contract until Form 1295 is submitted, therefore, failure to timely submit Form 1295 signed, and notarized may result in delay.

In, addition, please include your ***"Updated Certificate of Insurance"*** with acknowledgment of receipt to this notice by signing below and returning to the Hidalgo County Purchasing Department, via email: yvette.salinas@co.hidalgo.tx.us by no later than date reflected above.

By: _____ Date: 5-16-17
Mr. Kevin Kanipe

Hidalgo County Purchasing Department welcomes and appreciates your participation in the contract process. If any further assistance is required, please do not hesitate to call the Purchasing Department (956)318-2626.

Sincerely,
Yvette Salinas
Yvette Salinas, Buyer III
Hidalgo County Purchasing

CERTIFICATE OF INTERESTED PARTIES

FORM 1295

Complete Nos. 1 - 4 and 6 if there are interested parties.
Complete Nos. 1, 2, 3, 5, and 6 if there are no interested parties.

OFFICE USE ONLY
CERTIFICATION OF FILING

Certificate Number:
2017-208405

Date Filed:
05/16/2017

Date Acknowledged:

1 Name of business entity filing form, and the city, state and country of the business entity's place of business.
Gulf Data Products
Harlingen, TX United States

2 Name of governmental entity or state agency that is a party to the contract for which the form is being filed.
Hidalgo County

3 Provide the identification number used by the governmental entity or state agency to track or identify the contract, and provide a description of the services, goods, or other property to be provided under the contract.
E-17-166
Printing Services & Related supplies

4 Name of Interested Party	City, State, Country (place of business)	Nature of interest (check applicable)	
		Controlling	Intermediary
Kanipe, Kevin	Edinburg, TX United States	X	

5 Check only if there is NO Interested Party. ☐

6 AFFIDAVIT

I swear, or affirm, under penalty of perjury, that the above disclosure is true and correct.

NOTARY PUBLIC STATE OF TEXAS
MARTHA STEWART
Notary Public
STATE OF TEXAS
My Comm. Exp. 02-17-2019

AFFIX NOTARY STAMP / SEAL ABOVE

Signature of authorized agent of contracting business entity

Sworn to and subscribed before me, by the said Kevin Kanipe, this the 17 day of May, 2017, to certify which, witness my hand and seal of office.

Martha Stewart — Signature of officer administering oath
Martha Stewart — Printed name of officer administering oath
Title of officer administering oath

CERTIFICATE OF LIABILITY INSURANCE

DATE (MM/DD/YYYY): 03/09/2017

THIS CERTIFICATE IS ISSUED AS A MATTER OF INFORMATION ONLY AND CONFERS NO RIGHTS UPON THE CERTIFICATE HOLDER. THIS CERTIFICATE DOES NOT AFFIRMATIVELY OR NEGATIVELY AMEND, EXTEND OR ALTER THE COVERAGE AFFORDED BY THE POLICIES BELOW. THIS CERTIFICATE OF INSURANCE DOES NOT CONSTITUTE A CONTRACT BETWEEN THE ISSUING INSURER(S), AUTHORIZED REPRESENTATIVE OR PRODUCER, AND THE CERTIFICATE HOLDER.

IMPORTANT: If the certificate holder is an ADDITIONAL INSURED, the policy(ies) must be endorsed. If SUBROGATION IS WAIVED, subject to the terms and conditions of the policy, certain policies may require an endorsement. A statement on this certificate does not confer rights to the certificate holder in lieu of such endorsement(s).

PRODUCER: STATE FARM INSURANCE ROBERT ELIZALDE, AGENT 5107 S MCCOLL RD EDINBURG, TX 78539	CONTACT NAME: OMAR RIVERA PHONE (A/C, No, Ext): 956-683-9800 FAX (A/C, No): 956-683-9810 E-MAIL ADDRESS: OMAR.RIVERA.KOTN@STATEFARM.COM
INSURED: RICHARD K. KANIPE GULF DATA PRODUCTS 1805 OAKS RD EDINBURG, TX 78539	INSURER(S) AFFORDING COVERAGE — NAIC # INSURER A : State Farm Mutual Automobile Insurance Company — 25178 INSURER B : INSURER C : INSURER D : INSURER E : INSURER F :

COVERAGES **CERTIFICATE NUMBER:** **REVISION NUMBER:**

THIS IS TO CERTIFY THAT THE POLICIES OF INSURANCE LISTED BELOW HAVE BEEN ISSUED TO THE INSURED NAMED ABOVE FOR THE POLICY PERIOD INDICATED. NOTWITHSTANDING ANY REQUIREMENT, TERM OR CONDITION OF ANY CONTRACT OR OTHER DOCUMENT WITH RESPECT TO WHICH THIS CERTIFICATE MAY BE ISSUED OR MAY PERTAIN, THE INSURANCE AFFORDED BY THE POLICIES DESCRIBED HEREIN IS SUBJECT TO ALL THE TERMS, EXCLUSIONS AND CONDITIONS OF SUCH POLICIES. LIMITS SHOWN MAY HAVE BEEN REDUCED BY PAID CLAIMS.

INSR LTR	TYPE OF INSURANCE	ADDL INSR	SUBR WVD	POLICY NUMBER	POLICY EFF (MM/DD/YYYY)	POLICY EXP (MM/DD/YYYY)	LIMITS	
	GENERAL LIABILITY						EACH OCCURRENCE	$
	COMMERCIAL GENERAL LIABILITY						DAMAGE TO RENTED PREMISES (Ea occurrence)	$
	CLAIMS-MADE OCCUR						MED EXP (Any one person)	$
							PERSONAL & ADV INJURY	$
							GENERAL AGGREGATE	$
	GEN'L AGGREGATE LIMIT APPLIES PER:						PRODUCTS - COMP/OP AGG	$
	POLICY PRO-JECT LOC							$
A	AUTOMOBILE LIABILITY			167 8540-C06-53A-001	03/06/2017	09/06/2017	COMBINED SINGLE LIMIT (Ea accident)	$
	ANY AUTO						BODILY INJURY (Per person)	$ 500,000
	ALL OWNED AUTOS / X SCHEDULED AUTOS						BODILY INJURY (Per accident)	$ 500,000
	HIRED AUTOS / NON-OWNED AUTOS						PROPERTY DAMAGE (Per accident)	$ 500,000
								$
	UMBRELLA LIAB OCCUR						EACH OCCURRENCE	$
	EXCESS LIAB CLAIMS-MADE						AGGREGATE	$
	DED RETENTION $							$
	WORKERS COMPENSATION AND EMPLOYERS' LIABILITY ANY PROPRIETOR/PARTNER/EXECUTIVE OFFICE/MEMBER EXCLUDED? Y / N (Mandatory in NH) If yes, describe under DESCRIPTION OF OPERATIONS below	N / A					WC STATU-TORY LIMITS / OTH-ER	
							E.L. EACH ACCIDENT	$
							E.L. DISEASE - EA EMPLOYEE	$
							E.L. DISEASE - POLICY LIMIT	$

DESCRIPTION OF OPERATIONS / LOCATIONS / VEHICLES (Attach ACORD 101, Additional Remarks Schedule, if more space is required)

2016 TOYOTA HIGHLANDER 5TDYKRFH7GS182026

CERTIFICATE HOLDER

HIDALGO COUNTY
2802 S BUSINESS HWY 281
EDINBURG, TX 78539

CANCELLATION

SHOULD ANY OF THE ABOVE DESCRIBED POLICIES BE CANCELLED BEFORE THE EXPIRATION DATE THEREOF, NOTICE WILL BE DELIVERED IN ACCORDANCE WITH THE POLICY PROVISIONS.

AUTHORIZED REPRESENTATIVE

Omar Rivera

© 1988-2010 ACORD CORPORATION. All rights reserved.

CERTIFICATE OF LIABILITY INSURANCE

DATE (MM/DD/YYYY): 05/16/2017

THIS CERTIFICATE IS ISSUED AS A MATTER OF INFORMATION ONLY AND CONFERS NO RIGHTS UPON THE CERTIFICATE HOLDER. THIS CERTIFICATE DOES NOT AFFIRMATIVELY OR NEGATIVELY AMEND, EXTEND OR ALTER THE COVERAGE AFFORDED BY THE POLICIES BELOW. THIS CERTIFICATE OF INSURANCE DOES NOT CONSTITUTE A CONTRACT BETWEEN THE ISSUING INSURER(S), AUTHORIZED REPRESENTATIVE OR PRODUCER, AND THE CERTIFICATE HOLDER.

IMPORTANT: If the certificate holder is an ADDITIONAL INSURED, the policy(ies) must have ADDITIONAL INSURED provisions or be endorsed. If SUBROGATION IS WAIVED, subject to the terms and conditions of the policy, certain policies may require an endorsement. A statement on this certificate does not confer rights to the certificate holder in lieu of such endorsement(s).

PRODUCER	Connelly & Bartnesky Insurance Agency 1209 E. Harrison, Suite A PO Box 2839 Harlingen, TX 78550
CONTACT NAME:	Eddie Bartnesky
PHONE (A/C, No, Ext):	(956) 425-8821 **FAX (A/C, No):** (956) 425-0894
E-MAIL ADDRESS:	eddie@connellybartnesky.com
INSURER(S) AFFORDING COVERAGE	**NAIC #**
INSURER A :	Ohio Security Insurance Company — 24082
INSURED	Gulf Data Products E.A. Stone Inc. 810 E Harrison Harlingen, TX 78550
INSURER B :	
INSURER C :	
INSURER D :	
INSURER E :	
INSURER F :	

COVERAGES **CERTIFICATE NUMBER:** **REVISION NUMBER:**

THIS IS TO CERTIFY THAT THE POLICIES OF INSURANCE LISTED BELOW HAVE BEEN ISSUED TO THE INSURED NAMED ABOVE FOR THE POLICY PERIOD INDICATED. NOTWITHSTANDING ANY REQUIREMENT, TERM OR CONDITION OF ANY CONTRACT OR OTHER DOCUMENT WITH RESPECT TO WHICH THIS CERTIFICATE MAY BE ISSUED OR MAY PERTAIN, THE INSURANCE AFFORDED BY THE POLICIES DESCRIBED HEREIN IS SUBJECT TO ALL THE TERMS, EXCLUSIONS AND CONDITIONS OF SUCH POLICIES. LIMITS SHOWN MAY HAVE BEEN REDUCED BY PAID CLAIMS.

INSR LTR	TYPE OF INSURANCE	ADDL INSD	SUBR WVD	POLICY NUMBER	POLICY EFF (MM/DD/YYYY)	POLICY EXP (MM/DD/YYYY)	LIMITS	
A	☑ COMMERCIAL GENERAL LIABILITY			BZS56727269	05/28/2017	05/28/2018	EACH OCCURRENCE	$ 1,000,000
	☐ CLAIMS-MADE ☑ OCCUR						DAMAGE TO RENTED PREMISES (Ea occurrence)	$ 1,000,000
							MED EXP (Any one person)	$ 15,000
							PERSONAL & ADV INJURY	$ included
	GEN'L AGGREGATE LIMIT APPLIES PER:						GENERAL AGGREGATE	$ 2,000,000
	☑ POLICY ☐ PRO-JECT ☐ LOC						PRODUCTS - COMP/OP AGG	$ 2,000,000
	OTHER:							$
	AUTOMOBILE LIABILITY						COMBINED SINGLE LIMIT (Ea accident)	$
	☐ ANY AUTO						BODILY INJURY (Per person)	$
	☐ OWNED AUTOS ONLY ☐ SCHEDULED AUTOS						BODILY INJURY (Per accident)	$
	☐ HIRED AUTOS ONLY ☐ NON-OWNED AUTOS ONLY						PROPERTY DAMAGE (Per accident)	$
								$
	UMBRELLA LIAB ☐ OCCUR						EACH OCCURRENCE	$
	EXCESS LIAB ☐ CLAIMS-MADE						AGGREGATE	$
	☐ DED ☐ RETENTION $							$
	WORKERS COMPENSATION AND EMPLOYERS' LIABILITY Y / N						☐ PER STATUTE ☐ OTH-ER	
	ANY PROPRIETOR/PARTNER/EXECUTIVE OFFICER/MEMBER EXCLUDED? ☐ **(Mandatory in NH)**	N / A					E.L. EACH ACCIDENT	$
	If yes, describe under DESCRIPTION OF OPERATIONS below						E.L. DISEASE - EA EMPLOYEE	$
							E.L. DISEASE - POLICY LIMIT	$

DESCRIPTION OF OPERATIONS / LOCATIONS / VEHICLES (ACORD 101, Additional Remarks Schedule, may be attached if more space is required)

CERTIFICATE HOLDER

Hidalgo County
2802 S Business 281
Edinburg, TX 78539

CANCELLATION

SHOULD ANY OF THE ABOVE DESCRIBED POLICIES BE CANCELLED BEFORE THE EXPIRATION DATE THEREOF, NOTICE WILL BE DELIVERED IN ACCORDANCE WITH THE POLICY PROVISIONS.

AUTHORIZED REPRESENTATIVE

Eddie Bartnesky

© 1988-2015 ACORD CORPORATION. All rights reserved.

The ACORD name and logo are registered marks of ACORD

CERTIFICATE OF INTERESTED PARTIES

FORM 1295

Complete Nos. 1 - 4 and 6 if there are interested parties.
Complete Nos. 1, 2, 3, 5, and 6 if there are no interested parties.

OFFICE USE ONLY
CERTIFICATION OF FILING

Certificate Number:
2017-208405

Date Filed:
05/16/2017

Date Acknowledged:
05/17/2017

1 Name of business entity filing form, and the city, state and country of the business entity's place of business.

Gulf Data Products
Harlingen, TX United States

2 Name of governmental entity or state agency that is a party to the contract for which the form is being filed.

Hidalgo County

3 Provide the identification number used by the governmental entity or state agency to track or identify the contract, and provide a description of the services, goods, or other property to be provided under the contract.

E-17-166
Printing Services & Related supplies

4 Name of Interested Party	City, State, Country (place of business)	Nature of interest (check applicable)	
		Controlling	Intermediary
Kanipe, Kevin	Edinburg, TX United States	X	

5 Check only if there is NO Interested Party. ☐

6 AFFIDAVIT

I swear, or affirm, under penalty of perjury, that the above disclosure is true and correct.

_____
Signature of authorized agent of contracting business entity

AFFIX NOTARY STAMP / SEAL ABOVE

Sworn to and subscribed before me, by the said _____, this the _____ day of _____, 20_____, to certify which, witness my hand and seal of office.

_____ _____ _____
Signature of officer administering oath | Printed name of officer administering oath | Title of officer administering oath

March 22, 2016

E-16-125-03-22

Term: 06/15/2016 to 06/14/2017

AGENDA
CC REGULAR CONSENT
COMMISSIONERS' COURT
March 22, 2016
9:30 A.M.

NOTICE is hereby given in accordance with Chapter 551, Texas Government Code, that a SPECIAL MEETING of the Commissioners' Court will be held at the Edinburg Council Chambers 415 W. University Drive, Edinburg, Hidalgo County, Texas. Discussion and possible action relating to the following business will be transacted:

NOTICE TO THE PUBLIC
CONSENT AGENDA

The following items are of a routine or administrative nature. The Commissioners' Court has been furnished with background and support on each item, and/or it has been discussed at a previous meeting. All items will be acted upon by one vote without being discussed separately unless requested by a Court Commissioner, in which event the item or items will immediately be withdrawn for individual consideration in its normal sequence after the items not requiring separate discussion have been acted upon. The remaining items will be adopted by one vote.

On motion by COMMISSIONER PCT. 1, A.C. CUELLAR, JR., seconded by COMMISSIONER PCT. 3, JOE M. FLORES, the Court made a UNANIMOUS vote of approval without Items.9.A.,12.B. and 12.E. to be pulled for discussion.

Vote: 3 - 0 - Unanimously

Court proceeded to Item.9.A.

1. AI-53880 **Approval of check register and payment of claims and bills** - (Payments from Juvenile Probation, Adult Probation, LEOSE Fund, DA Motor Vehicle Theft Fund, DA Check Fraud Fund, DA Forfeiture Fund, Sheriff Forfeiture Funds, Constable Forfeiture Funds, HIDTA Forfeiture Funds and VIT Interest Fund are presented for recording purposes only.)

2. **2016 Intradepartmental transfers:**

   A. AI-53870 2016 - Pct 2 Parks (1100)

   B. AI-53869 2016 - Pct 2 Administration (1200)

   C. AI-53865 2016 - Pct. 4 Rd. Maint (1200)

O. AI-53515 Requesting authority to advertise and approval of procurement packet (i.e. specifications/requirements, legal notice, draft requirement agreement etc.) as attached hereto for: Hidalgo County Precinct No.2 - " Hauling Services for all Road Materials" -RFB No.: 2016-079-00-00-SGS. Including the re-advertising of project in the event No Bids responses are received and/or are rejected and project is still required.

P. AI-53686 Acceptance and approval to exercise the County's option to extend the first (1st) year [of multiple term extensions] allowed in Contract #C-15-029-06-02 to RFB No: 2015-029-05-06-SMA, under the same rates, terms and conditions with E.A. Stone, d/b/a Gulf Data Products for the provision of the "General Printing Services and Related Supplies".

Q. AI-53653 Acceptance and approval to exercise the County's option to extend the 2nd (final) year of the two (2)-one (1) year term as allowed in Contract #E-15-140-03-31 (Original Contract #C-14-012-05-20 to RFB No: 2014-012-03-19-CGA) under the same rates, terms and conditions with Pavement Markings, Inc. for the provision of "Striping/Markings of County Roads, County Parking Lots, & Misc. County Owned Sites".

R. AI-53501 Requesting authority to advertise and approval of procurement packet (i.e. specifications/requirements, legal notice, draft requirement agreement etc.) as attached hereto for: Hidalgo County Tax Assessor/Collector Office-"Printing and Mailing 2016 & 2017 Tax Statements" - RFB No. 2016-059-00-00-SGS. Including the re-advertising of project in the event No Bids, responses are received and/or are rejected and project is still required.

S. AI-53626 Requesting authority to advertise and approval of procurement packet (i.e. specifications/requirements, legal notice, draft service contract etc.) as attached hereto for: Hidalgo County-"Maintenance & Repairs for Elevators Located in County owned Buildings" RFB No.: 2016-074-SMA including the re-advertising of project in the event no Bids are received and/or are rejected and project is still required.

T. AI-53592 **Sheriff's Office:**

1. Authorization and approval to purchase through the State of Texas Surplus Property Program under Chapter 2175.001 of the Texas Local Government code and Sec. 262.024 (9)c: One (1) 2011 f11-5200 Ford Crown VIC [Victoria] police interceptor model vehicles for the total amount of $7,000.00 thru requisition 294050;

2. Authority for Purchasing Department to issue a purchase order and County Treasurer's office to issue a check made payable to Texas Facilities Commission Department of Public Safety after County Auditor's review.

APPROVED

Purchasing Department
12. P.

AI-53686

CC CONSENT

Meeting Date: 03/22/2016

Submitted For: Marty Salazar, PURCHASING DEPT.

Submitted By: Vangie Garcia, PURCHASING DEPT.

Department: PURCHASING DEPT.

Information

CAPTION

Acceptance and approval to exercise the County's option to extend the first (1st) year [of multiple term extensions] allowed in Contract #C-15-029-06-02 to RFB No: 2015-029-05-06-SMA, under the same rates, terms and conditions with E.A. Stone, d/b/a Gulf Data Products for the provision of the "General Printing Services and Related Supplies".

BACKGROUND

Extension effective June 15, 2016 ending on June 14, 2017.

Fiscal Impact

FISCAL YEAR: ACCT. #:

FUNDS AVAILABLE Y/N?: MATCHING FUNDS Y/N?:

BUDGETARY IMPACT:

Contract to be used by various departments/precincts account users with possible obj. code 550.

Attachments

Extension and Contract-Gulf Data Products

1295

Form Review

Inbox	Reviewed By	Date
Purchasing Department	Marty Salazar	03/10/2016 01:55 PM
Budget & Management	Veronica Ortiz	03/11/2016 10:04 AM

Glinda Pacheco	Glinda Pacheco	03/14/2016 11:01 AM
Final Approval	Monica Badillo	03/18/2016 04:10 PM

Form Started By: Vangie Garcia Started On: 03/04/2016 09:18 AM

Final Approval Date: 03/18/2016

Hidalgo County Purchasing Department
2812 S. Business Highway 281
New Administration Building
Edinburg, Texas 78539
(956) 318-2626/ Fax: (956) 318-2629

March 3, 2016

E.A. Stone, Inc. d/b/a
Gulf Data Products
Attn: Kevin Kanipe
810 E. Harrison
Harlingen, Texas 78550

Via Email: gulfdata2@sbcglobal.net

Re: Renewal of Contract #C-15-029-06-02
"RFB No: 2015-029-05-06-SMA-General Printing Services And Related Supplies"

Dear Mr. Kanipe;

Hidalgo County Purchasing Department will be requesting Commissioners' Court to consider the County's sole option to exercise the **First (1st) year extension** of the two (2)-one(1) year term as provided in the current contract (under the same rates, terms and conditions).

Please acknowledge receipt of this notice of placement on the Commissioners' Court meeting of **Tuesday, March 22, 2016** for discussion, consideration and action, by signing below and returning to the Purchasing Department, by no later than ***10:00 a.m., Monday, March 7, 2016 and or sooner***, via facsimile to (956) 956-318-2629 or email to: evangelina.garcia@co.hidalgo.tx.us so as to meet the agenda request form deadlines.

By: Kevin Kanipe Date: 3-3-16

Additionally, we are requesting your company provide an updated certificate of insurance as required through Hidalgo County's Request for (Bid, Quote, Proposal, Statement of Qualification), if applicable: NOTE: I need your updated auto insurance accord".

Should you have any questions or require additional information, please do not hesitate to contact me at (956) 318-2626. Your cooperation in this matter is greatly appreciated and we hope your company continues its business relationship with Hidalgo County.

Sincerely,
Vangie Y. Garcia, Contract's Manager
Hidalgo County Purchasing Department

THE STATE OF TEXAS §
§
COUNTY OF HIDALGO §

SERVICE CONTRACT
C-15-029-06-02

THIS CONTRACT is made and entered into this **2nd Day** of **June, 2015** by and between the **COUNTY OF HIDALGO, TEXAS** ("County"), and **E.A. STONE, INC. DBA GULF DATA PRODUCTS** ("Company").

WHEREAS, Company responded to advertised notices for bids for **"GENERAL PRINTING SERVICES AND RELATED SUPPLIES"** the ("Services"); and

WHEREAS, Company submitted a bid to provide services in accordance with the specifications as bid, a copy of such specifications and bid being attached hereto as Exhibits "A" and "B" ("Vendor's Bid") respectively, and incorporated herein for all purposes (the "RFB Packet"); and

WHEREAS, in recognition of and in consideration of Company's agreement to perform the Services in accordance with Specifications, the Commissioners Court of County awarded the bid to Company.

NOW, THEREFORE, in mutual consideration of the foregoing and the further consideration of the following, the parties hereto agree as follows:

1. County and Company hereby agree that this Contract is entered into in order to provide the Services to locations at **Hidalgo County**. This Contract does not extend to any third parties any duties or benefits conferred in any manner hereunder or otherwise.

2. Company hereby promises and agrees to render and provide, during the term of this Contract, and shall be obligated to render and provide the Services in accordance with the Specifications within **Hidalgo County** following a request for Services by the **Commissioners' Court** or their designated agent. Company agrees in performing the Services that it will use proper professional standards, comply with any and all appropriate laws and regulations in providing the Services, and devote such time as is necessary to safely and efficiently provide the Services.

3. This Contract shall be for a period of one year effective **June 15, 2015** and ending on **June 14, 2016.** Hidalgo County at its sole discretion elect the option to extend the contract for two (2) - one (1) year terms at the same rates, terms and conditions and may further extend an additional sixty (60) days grace period at the end of the contract term due to any unforeseen delay in the procurement process, unless this Contract is terminated pursuant to the provisions herein, whichever occurs first.

4. As a condition of this Contract, Company shall hold and maintain throughout the term of this Contract all licenses and permits required, or which may be required by any authority during the term hereof to provide the Services.

5. All trucks or vehicles operated by the Company to perform the Services shall contain all equipment required by any authority to operate on streets and roads and all persons in the employ of Company who operate such trucks or vehicles shall have the required licenses, qualifications, skill and expertise to perform such Services and shall comply with all laws, rules and regulations prescribed by any agency or authority having jurisdiction with regard to the

operation of such trucks or vehicles in providing the Services.

6. As consideration for rendering the Service provided for in this Contract, the County agrees to pay Company the amounts specified in Exhibit "B" attached hereto payable against written invoice submitted by Company.

7. Company shall provide insurance in force on all its vehicles and all persons connected with providing services under this Contract naming County as an additional insured (with the coverages and in the amounts described on Exhibit "C" attached hereto and incorporated herein at this point for all purposes), and shall furnish to County certificates of such insurance coverage.

8. Company shall provide a sufficient number of trucks, vehicles, personnel and equipment available to safely and efficiently provide the Services.

9. Company shall indemnify and hold harmless County, its elected officials, employees and agents from any and all claims, damages, losses, and expenses including attorney's fees for the defense of any action against County arising out of, resulting from, or connected with the provision of the Service by Company under this Contract. Said indemnity shall cover any act or failure to act by the Company, its agents or employees.

10. This Contract shall not be assignable in whole or in part by either party without prior written consent of the other party.

11. It is expressly agreed that this Contract and the performance by the parties hereunder does not create any agency relationship or master-servant relationship, that County has no supervision of the performance of the Services provided by Company, and that Company is

an independent contractor under this Contract.

12. Any notice required or permitted to be given hereunder shall be in writing and shall be delivered personally or sent by certified mail, postage prepaid, as set forth below:

If to County: **The County of Hidalgo**
Attn: County Judge
304 W. University Drive
Edinburg, Texas 78539

If to Company: **E.A. Stone, Inc. dba Gulf Data Products**
810 E. Harrison
Harlingen, Texas 78550

13. In case any one or more of the provisions contained in this Agreement shall for any reason be held to be invalid, illegal or unenforceable in any respect, such invalidity, illegality, or unenforceability shall not affect any other provision thereof and this Agreement shall be construed as if such invalid, illegal, or unenforceable provision had never been contained herein.

14. Any contract award to a successful bidder will be in effect until (a) the contract expires, (b) delivery and acceptance of products, and/or performance of services ordered, or (c) terminated without cause by County with thirty day's written notice prior to cancellation.

15. The contract may be terminated without cause upon thirty (30) days written notice by County.

16. This Agreement shall be binding upon and inure to the benefit of and be enforceable by the parties hereto and their respective heirs, executors, administrators, legal representatives, successors, and assigns where permitted by this Agreement.

17. This Agreement shall be governed by and construed in accordance with the laws

of the State of Texas and shall be performable in Hidalgo County.

18. **Commitment of Current Revenues Only**. In the event that, during any term hereof, the Commissioners Court does not appropriate sufficient funds to meet the obligations of Buyer under this Agreement, Buyer may terminate this Agreement upon sixty (60) days written notice to Seller. Buyer agrees, however, to use reasonable efforts to secure funds necessary for the continued performance of this Agreement. The parties intend this provision to be a continuing right to terminate this Agreement at the expiration of each budget period of Buyer pursuant to the provisions of Tex. Loc. Govt. Code Ann. ' 271.903 (Vernon Supp. 1996).

19. **Immunities:** Nothing in this Agreement is intended to and County does not hereby waive, release or relinquish any right to assert any of the defenses County enjoys by virtue of the stated or federal constitution, laws, rules or regulations, and any sovereign, official or qualified immunity available to County as to any claim or action of any person, entity, or individual against County.

WITNESS our hands in duplicate originals this_____ day of _____, 2015.

COUNTY OF HIDALGO

ATTEST:

By: Ramon Garcia
Ramon Garcia, County Judge

Arturo Guajardo Jr., County Clerk

APPROVED AS TO FORM:
Atlas, Hall & Rodriguez, LLP

COMPANY: GULF DATA PRODUCTS
By:
Title: PRESIDENT

By:
Stephen L. Crain

APPROVED BY
COMMISSIONERS' COURT
ON: 6/2/15

APPROVED BY COMMISSIONES COURT: JUNE 2, 2015

Hidalgo County Purchasing Department
New Administration Building
2812 S. Business Highway 281
Edinburg, Texas 78539
(956) 318-2626/ Fax: (956) 318-2629

April 20, 2015

_____
Participant's name

_____
Address

_____
City

_____
State, Zip Code

Re: **HIDALGO COUNTY**
Request for Bids –"General Printing Services & Related Supplies"
Bid No: ***2015-029-05-06-SMA***

Dear Gentleman/Ladies:

Enclosed please find a Request for Bid (RFB) packet for your review and consideration.

Hidalgo County Purchasing Department welcomes and appreciates your participation in the bid process.

If any further assistance is required, please do not hesitate to call the Purchasing Department 956/318-2626.

Sincerely,

Martha L. Salazar, CPPB
Hidalgo County Purchasing Agent

MLS/sma
Enclosures

Hidalgo County Purchasing Department
2812 S. Business Highway 281
Edinburg, Texas 78539
(956) 318-2626/ Fax: (956) 318-2629

REQUEST FOR BIDS (RFB)

Hidalgo County
"General Printing Services & Related Supplies"
RFB NO: *2015-029-05-06-SMA*

Table of Contents

Item	Description	No. of Pages
1.	**Request for Bid Letter**	**1**
2.	**Request for Bid, Legal Notice**	**8**
3.	**Exhibit "A" Specifications**	**4**
4.	**Exhibit "B" Bid Page**	**13**
5.	**Exhibit "C"- Insurance Requirements**	**4**
6.	**Exhibit "D"- CIQ Conflict of Interest Questionnaire**	**1**
7.	**Vendor/Bidder Application and W-9 form**	**6**
8.	**Certification Regarding Debarment**	**1**
9.	**Draft Requirements Agreement**	**8**

The above mentioned items shall be found in the Request for Bid (RFB) packet that is attached herewith. Should you find that any of the items are not attached in its entirety please contact Purchasing by calling (956) 318-2626 or via email to sandra.montalvo@co.hidalgo.tx.us, and advise of missing documentation.

Thank you.

Martha L. Salazar, CPPB, Purchasing Agent

April 20, 2015
Date

Bid No: 2015-029-05-06-SMA	Buyer: Sandra Montalvo	Tel. No: (956) 318-2626 Ext. 4865

REQUEST FOR BIDS

HIDALGO COUNTY

"General Printing Services & Related Supplies"

BID OPENING DATE: May 6, 2015 @ 9:30

Contact Person:

Martha L. Salazar, CPPB, Purchasing Agent
HIDALGO COUNTY Purchasing Department
Physical Address: 2802 S. Business Hwy. 281 -New Administration Building
Mailing/Postal Address: 2812 S. Business Hwy. 281
Edinburg, Texas 78539
956 318-2626

1) Sealed bids will be received for **HIDALGO COUNTY–"*General Printing Services & Related Supplies"*** in accordance with the specifications attached as Exhibit "A" hereto. Bids should address all specifications set forth. Bidders may suggest substitutions of features which they feel would be in the best interest of HIDALGO COUNTY ("County"). Strong rationale must be presented for any deviation from the specifications. HIDALGO COUNTY reserves the right to reject the deviation and its effect on the overall bid.

2) **ONE (1) ORIGINAL AND THREE (3) COPIES** of all bids are required with the bidders name and return address clearly typed/printed on upper left hand corner and the proper notation clearly typed/printed on the lower left hand corner of the envelope and/or package: **RFB-2015-029-05-06-SMA *Hidalgo County–"General Printing Services & Related Supplies"*** and in County's Purchasing Department, physical address: 2812 S. Business Hwy. 281, mailing address: 2812 S. Business 281- New Administration Building, Edinburg, Texas, **on or before 9:30 A.M., WEDNESDAY, May 6, 2015.**

NO FACSIMILES OR LATE ARRIVALS WILL BE ACCEPTED. ANY RFB RECEIVED AFTER THAT TIME WILL NOT BE OPENED AND WILL BE RETURNED. OVERNIGHT MAIL MUST ALSO BE PROPERLY LABELED ON THE OUTSIDE OF EXPRESS ENVELOPE OR PACKAGE WITH REFERENCE TO RFB-2015-029-05-06-SMA *Hidalgo County–"General Printing Services & Related Supplies".*

HIDALGO COUNTY reserves the right to refuse and reject any/all RFB and to waive any/all formalities or technicalities, or to accept the RFB considered the best and most advantageous to HIDALGO COUNTY.

3) HIDALGO COUNTY reserves the right to: A). separate and accept, or eliminate any item(s) listed under this bid that it deems necessary to accommodate budgetary and/or operational requirements; B.) reject any or all bids submitted and further reserves the right to design the evaluation criteria to be used in selecting the lowest and best bid for approval; and C.) award the bid to one bidder or to multiple bidders if the County determines it is in its best interest to do so."

4) The Bidder shall not substitute items named in the bid without the express written consent of HIDALGO COUNTY. Failure of the delivered item to perform as specified or failure to meet the stated delivery schedule shall release HIDALGO COUNTY from all obligations to the contracting party with regard to the item(s) in question. In such event, County may elect to award the contract to the next-lowest responsible bidder, or to reject all bids and re-advertise.

5) For work to be performed at a County owned or operated location, each bidder shall, in its sole discretion, visit the job site before preparing the bid and thoroughly familiarize himself/herself with existing conditions. Bidder should take field dimensions and note all circumstances which affect the dollar amount of the bid.

6) Descriptive specifications are referenced in this document to indicate the general kind and quality of equipment desired by HIDALGO COUNTY. Due to various styles and models of equipment, bidders are required to include illustrations, specifications, explanation of warranties, and service data with their bid including catalogue numbers and any necessary references.

7) No bid may be withdrawn within thirty (30) days from the scheduled time to open bids.

8) Proposed prices are to remain firm for a minimum of ninety (90) days after bid opening.

9) Any interpretations, amendments, corrections or changes to this bid document must be in a written addendum and signed by the County Judge or his designee. Addenda will be mailed to all who are known to have received a copy of the Request for Bids. Bidders shall acknowledge receipt of all addenda as a part of their bid.

10) County reserves the right to accept or reject any or all bids.

11) Costs are to be net F.O.B., County Prepaid.

12) County is exempt from Federal Excise Tax, State Tax and Local Tax. Do Not include tax in cost figure. If it is determined that tax was included in the cost figures it will not be included in the tabulation of any awards. Tax exemption certificates will be furnished upon request.

13) Funds for this procurement have been provided through the County budget for this fiscal year only. County, on an annual basis, has the right to reconsider a contract during the budget process for ensuing years if financial resources of County are insufficient to meet the liabilities of said contract. The award of a bid or contract hereunder will not be construed to create a debt of the County which is payable out of funds beyond the current fiscal year.

14) Upon award and prior to execution of a contract, Sole Proprietorships are required to submit a copy of their social security cards to the HIDALGO COUNTY Auditor's Office in order to establish an account with the County. All awarded vendors must submit a completed W-9 and a copy o their Federal ID Number Certificate.

15) POST AWARD PRODUCTS DELIVERY INSTRUCTIONS:

- Materials and supplies must be shipped within 72 hours from arrival of purchase order.
- Deliveries shall be accepted between 8:00 AM, Monday- Friday, unless prior approvals for after -hours deliveries have been obtained from respective department(s) contact person(s) before delivery will be accepted, unless other delivery arrangements have been made.
- At least seventy two (72) hours prior notice of delivery must be given to. Martha L. Salazar, Purchasing Agent before delivery will be accepted, unless other delivery arrangements have been made.
- Deliveries not made within delivery schedule shall be considered delinquent. Delinquent orders shall constitute a breach of contract. The vendor must notify the requesting department of orders that exceed the delivery schedule to either cancel the order or extend the delivery schedule for that order.

At least seventy-two (72) hours prior to notice of a foreseen delivery delay shall also be given to appropriate department(s) contact person(s). The County has the right to extend the delivery date if reasons appear valid. The vendor must keep the County advised at all times of the status of the order(s). If the vendor has orders in their possession which have not been completed within the specified delivery time, the County reserves the right to withhold issuances of further orders until all orders have been filled and acceptable assurance has been given that the event will not be repeated.

For items not in stock at the time of order, vendor is to contact respective department(s) for approval, or cancellation, of a delivery time and date. The County reserves the right to pick up orders during emergency situations.

If you need additional information, contact information will be provided upon contract award

16) BILLING AND PAYMENT INSTRUCTIONS:

- Invoices must include:
  a) Name and address of successful bidder
  b) Name and address of receiving department or official
  c) Purchase Order Number (if any)
  d) Notation-***Hidalgo County–"General Printing Services & Related Supplies"*** Descriptive information as to the items or services delivered, including product code, item number, quantity, etc.
  e) Contract & purchase order number must be indicated on all invoices

- Discount payments will be considered when offered.

- Contact person for Billing and Payment questions:

Hidalgo County Auditor's Office
Ray Eufracio, CPA, County Auditor
2809 S. Bus. Hwy 281
Edinburg, Texas 78539
(956) 318-2511

17) SCHEDULE OF EVENTS

Bid Opening, 9:30 AM	**May 06, 2015**
Award of Contract	_____, 2015
Commence Work or Deliver Products	_____, 2015

18) BID OR PERFORMANCE BOND AND DEBARMENT CERTIFICATION; PAYMENT UNDER CONTRACT (if applicable)) :

- If the contract proposed is for the construction of public works or is for a contract for goods & services exceeding $100,000, all bidders shall furnish a good and sufficient bid bond in the amount of five percent of the total contract price. A bid bond must be executed with a surety company authorized to do business in Texas. All bidders are also required to furnish a certification or acknowledgment stating that the contractor or vendor is free from suspension or debarment pursuant to federal regulation 45CFR Part 76.

- Together with the signing of a contract or issuance of a purchase order following the acceptance of a bid, and prior to commencement of the actual work, the bidder shall furnish a performance bond to the County for the full amount of the contract, if that contract exceeds $50,000.

- If the contract is for $50,000 or less, no money will be paid to the contractor until completion and acceptance of the work or the fulfillment of the purchase obligation to the County, and, if applicable,

the receipt by County of satisfactory evidence that all subcontractors and material men have been paid.

- If a contract is for the construction, alteration or repair of public buildings or public works, the contractor *shall* provide a payment bond for a contract in excess of Twenty Five Thousand Dollars ($25,000.00), as required by Tex. Govt. Code Ch. 2253.

- For requirements contracts, bond requirements are determined by applying the proposed unit price to the estimated quantities included in the specifications.

19) ETHICAL STANDARDS:

- It shall be a breach of ethics to offer, give or agree to give any elected official, department head or employee, or former elected official, department head or employee, of the County, or for any elected official, department head or employee or former elected official, department head or employee of the County, to solicit, demand, accept or agree to accept from another person, entity or organization, a gratuity or an offer of employment in connection with any decision, approval, disapproval, recommendation, preparation or any part of a program requirement or purchase request, influencing the content of any specification or procurement standard, rendering of advice, investigation, auditing, or in any other advisory capacity in any proceeding or application, request for ruling, determination, claim or controversy, or other particular matter pertaining to any program requirement or a contract or subcontract, or to any solicitation or proposal therefore pending before any department or agency of the County.

- It shall be a breach of ethics for any payment, gratuity or offer of employment to be made by or on behalf of a subcontractor under a contract to the prime contractor or higher tier subcontractor for any contract for the County, or any person associated therewith, as an inducement for the award of a subcontract or order.

- No public official shall have an interest in a contract awarded hereunder except in accordance with Tex. Loc. Govt. Code Chapter 171.

20) DISCLOSURE OF CONFLICT OF INTEREST

- Effective January 1, 2006, Chapter 176 of the Texas Local Government Code requires that any vendor, person, consultant or contractor considering doing business with HIDALGO COUNTY ("the County") to disclose in the Conflict of Interest Questionnaire (the "CIQ") attached as Exhibit D, the vendor, person, consultant or contractor's affiliation or business relationship that might cause a conflict of interest with the County. By law, the CIQ must be filed with the HIDALGO COUNTY Clerk's Office no later than the seventh business day after the date the person becomes aware of facts that require that statement to be filed. The disclosure requirement applies to a person or business who contracts or seeks to contract with HIDALGO COUNTY for the sale or purchase of property, goods or service. Any purchase order or contract resulting from this process shall be considered null and void if the successful bidder fails to comply with Texas Local Government Code Chapter 176. Vendors, consultants, contractors and others who desire to conduct business with HIDALGO COUNTY are encouraged to refer to Texas Local Government Code Chapter 176 for the details of this law. An offense under Texas Local Government Code Chapter 176 is a Class C Misdemeanor. Please Submit completed CIQ forms to the HIDALGO COUNTY Clerk's Office located at 100 N. Closner, Edinburg, Texas 78539-HIDALGO COUNTY Courthouse **COMPLETION AND**

SUBMISSION OF FORM CIQ IS THE SOLE RESPONSIBILITY OF THE PROSPECTIVE BIDDER.

21) If, during the life of any contract or bid awarded, the successful bidder's net prices generally available to other customers for items awarded herein are reduced below the contracted price, it is understood and agreed that the benefits of such reduction shall be extended to County.

22) Bids, and all goods and services provided there under, shall comply with all federal, state and local laws concerning this type(s) of goods and/or services.

23) Minimum Standards For Responsible Prospective Bidders: A prospective bidder must affirmatively demonstrate bidder's responsibility. A prospective bidder, by submitting a bid, represents to County that it meets the following requirements:

- Possess or is able to obtain adequate financial resources as required to perform under the bid;
- Be able to comply with the required or proposed delivery schedule;
- Have a satisfactory record of performance;
- Have a satisfactory record of integrity and ethics;
- Be otherwise qualified and eligible to receive an award.

24) Successful bidder will pay or cause to be paid, without cost or expenses to County, all FICA, FUTA/SUTA and Federal Income Withholding Taxes of all employees, and all wages and benefits as required by Federal or State law. Successful bidder's officers, agents and/or employees will not be entitled to any benefits of an employee or elected official of County, including, but not limited to, benefits associated with County's civil service system.

25) Any contract award to a successful bidder will be in effect until: A.) the contract expires, B.) delivery and acceptance of products, and/or performance of services ordered, or C.) terminated by County with thirty (30) day's written notice prior to cancellation.

26) County reserves the right to enforce performance of any contract awarded hereunder in any manner prescribed by law or deemed to be in the best interest of the County in the event of breach or default by successful bidder; County reserves the right to terminate any contract immediately in the event a successful bidder fails to:

A.) Meet schedules;
B.) Pay any required fees or taxes; or
C.) Otherwise perform in accordance with the specifications.

27) Successful bidder shall defend, indemnify and save harmless County and all its elected officials, officers, agents and employees from all suits, actions, or other claims of any character, name and description brought for or on account of any injuries or damages received or sustained by any person, persons, or property on account of any negligent act or fault of the successful bidder, or of any agent, employee, subcontractor or supplier of successful bidder in the execution of, or performance under, any contract which may result from bid award or which arises from any event or casualty happening on or within County premises themselves or happening upon or in any halls, elevators, entrances, stairways or approaches of or to such County facilities. Successful bidder shall pay any judgment with costs which may be obtained against County growing out of such injury or damages, and shall, upon request, provide

a defense to County by counsel reasonably acceptable to County. Successful bidder's indemnity hereunder shall include, but is not limited to, claims relating to patent, copyright or trademark infringement, and the like, arising out of the goods and services provided by successful bidder.

28) Successful bidder shall warrant that all items/services shall conform with the specifications and/or all warranties provided under the Uniform Commercial Code and be free from all defects in material, workmanship and the like. Items supplied under a contract pursuant to this Request for Bids shall be subject to County's approval. Items found to be defective or not meeting specifications shall be replaced by successful bidder within two business days at no expense to County. Items not picked up within one (1) week after notification shall be deemed a donation to County and may be used or disposed of at County's discretion and without waiver of any other rights of County as to the item's nonconformity.

29) This document and any disputes arising hereunder shall be governed and construed according to the laws of the State of Texas, and will be performable exclusively in HIDALGO COUNTY, Texas.

30) The successful bidder shall not assign, sell, transfer or convey its rights under any awarded contract, in whole or in part, without the prior written consent of County.

Bid
For
HIDALGO COUNTY
"General Printing Services & Related Supplies"

To: Martha L. Salazar, CPPB, Purchasing Agent
HIDALGO COUNTY Purchasing Department
Physical Address: 2802 S. Business Hwy. 281 -New Administration Building
Mailing/Postal Address: 2812 S. Business Hwy. 281
Edinburg, Texas 78539

In accordance with the Specifications, and subject to all laws and regulations of the United States and state and local laws, the undersigned bidder proposes and commits to furnish all labor, equipment, material, software and services as set forth in the documents hereinbefore mentioned. The undersigned bidder further agrees, upon acceptance of its bid, to execute a contract and/or Purchase Order issued by HIDALGO COUNTY for performing and completing the work described in the Specifications within the time stated and for the prices proposed in the documents attached hereto and made a part hereof.

Bidder acknowledges receipt of all of the pages of the documents referenced in the Invitation to Bid Checklist presented in connection with this procurement. Bidder understands that HIDALGO COUNTY reserves the right to reject any or all bids and further reserves the right to design the evaluation criteria to be used in selecting the lowest and best bid.

Bidder agrees that this bid shall be good and may not be withdrawn for a period of ninety (90) calendar days after the scheduled closing time for receiving bids, as contained in the Specifications.

Respectfully submitted,

Bidder: _____

Address: _____

By: _____

Printed Name: _____

Title: _____

EXHIBIT'"A"

Specifications/Requirements

HIDALGO COUNTY

"General Printing Services & Related Supplies"

BID NO.: 2015-029-05-06-SMA

Hidalgo County is seeking to contract with a qualified vendor(s) to furnish ***"General Printing Services & Related Supplies"*** in accordance with the specifications/requirements specified herein and including, but not limited to all provisions set forth in the accompanying documentation. Vendor shall furnish all materials and supplies necessary to execute the specified services. These services will be on an "As Needed Basis".

The intent for this Invitation for bid is to obtain a qualified printing firm to provide, in the ESTIMATED quantities indicated, the annual printing requirements for the County as contained herein.

Quantities on the pricing pages depict the County's estimated annual requirements. These quantities WILL NOT be ordered at one time. Orders will be placed by individual departments on an "as needed" basis, in small quantities i.e., one (1) to three (3) boxes per order) throughout the year.

SPECIFICATIONS/REQUIREMENTS:

Listed are minimum requirements and are intended to govern the general printing services, including all material necessary for a finished product, which Hidalgo County uses during the course of routine County business.

1. All deliveries are to be made to Hidalgo County's specified department, during regular working days, Monday through Friday, between the hours of 8:00 am and 5:00 pm, unless otherwise requested by the County department.

2. Successful bidder will be required to notify the requesting department in the event of unforeseen delay arising in the delivery of a specified shipment. Delivery locations will be stated on each purchase order. If the vendor chooses to third party delivery, it must be stated under the method of delivery.

3. Order will be placed by various County departments on an "as needed" basis. Hidalgo County is not obligated to any minimum or maximum quantities.

4. **SAMPLES/DEMOS/PROOFS:**
   Upon request, samples/demos and/or proofs shall be furnished to Hidalgo County at ***no additional cost,*** for approval prior to printing.
   - **Samples:** Will be provided to Hidalgo County designee, prior to printing for approval by Department.
   - **Proofs:** Must be supplied prior to printing at no additional cost to Hidalgo County. The proof shall then be dated, signed by Hidalgo County and returned to vendor for printing.

5. **SAMPLE REVIEW:**
   This printing includes various items and forms. Bidder shall assume sole responsibility for viewing these samples in order to submit a bid consistent with requirements of the County. Failure to do so may result in rejection of bid.

6. **OVER RUNS:** Hidalgo County shall not pay for over-runs. Vendor is cautioned to provide only the quantity of print copies as stated on the Purchase Order. Any over-runs delivered to the County shall be considered as a donation and no additional fees will be allowed and/or paid.

7. **CD–**Samples of most of the printing forms will be provided to all bidders in a CD File for your review and consideration. Specifications: Listed are minimum requirements and are intended to govern the general printing services, including all material necessary for a finished product, which Hidalgo County uses during the course of routine County business.

8. **PRICING:**
All pricing submitted shall be inclusive of all reproduction costs to produce a complete and ready to use product. Any costs associated with the following: additional set-up fees, change fees, typesetting fees or delivery fees must be included in the bid prices. Hidalgo County will not accept or pay additional costs such as mentioned above.

9. **Sample Review:**
This printing includes various items and forms. Bidder shall assume sole responsibility for viewing these samples in order to submit a bid consistent with specifications/requirements of the County. Failure to do so may result in rejection of bid. Bidders are strongly encouraged to review the samples prior to submitting a bid. **Bidder that is interested to assess the forms before submitting a bid may do so by requesting an appointment via e-mail to:** sandra.montalvo@co.hidalgo.tx.us.When discrepancy occurs between specifications and sample, the sample shall prevail.

It is not necessary for bidders to submit bids for all sections to be considered for an award. However, bidder is expected to submit pricing for all items within each section that the bidder chooses to respond, in order to be considered for award for that particular section.

10. **PAPER STOCK:**
Paper stock shall be the same or better stock quality as sample provided.

11. **PACKAGING:**
Packaging of forms shall be boxed in quantities standard to the industry. All packages shall be marked with form number and Hidalgo County purchase order number on outside.

GENERAL REQUIREMENTS:
The following are the minimum requirements and/or specifications that will be acceptable by the County. Any bid that does not meet the minimum requirements and/or specifications will be rejected.

- Materials must be available for pick-up and/or delivery to the various locations in Hidalgo County during normal working hours, Monday through Friday
- All items must be shipped **F.O.B. INSIDE DELIVERY**
- If the vendor choices to transport by a third party delivery, it must be stated under the method of delivery on Exhibit B.
- All purchases will be on an **"As Needed Basis"**, there are no set quantities to be purchased.
- All products furnished under this RFB shall be warranted by the vendor to be free from defects and fit for the intended use.
- BID PAGE-Vendor **must** fill in each section of the Bid Page (Exhibit "B") if applicable, for not applicable INDICATE N/A on the form. INCOMPLETE submittals shall be considered a probable cause for disqualification.
- Vendor should match the sample as much as possible.

HIDALGO COUNTY DEPARTMENT'S

The following departments listed below are to be considered minimum. Hidalgo County reserves the right to add or delete number of departments as necessary and vendor agrees to comply with such requests.

Other Hidalgo County departments, not stated herein, may be included and may utilize this contract for the purchasing of these items that meet their specifications herein and those departments may possibly make modifications to the lettering, colors, logos, seals and/or emblems if necessary at no additional charge.

HIDALGO COUNTY DEPARTMENTS	
A.)	92nd Judicial District Court
B.)	139th Judicial District Court
C.)	206th Judicial District Court
D.)	332th Judicial District Court
E.)	370th Judicial District Court
F.)	398th Judicial District Court
G.)	430th Judicial District Court
H.)	Adult Probation
I.)	Auditor's Office
J.)	Commissioner Precinct 3
K.)	Constable Precinct No. 1
L.)	Constable Precinct No. 2
M.)	Constable Precinct No. 3
N.)	County Clerk's Office
O.)	County Court At Law #6 (Judge Albert Garcia)
P.)	District Attorney
Q.)	District Clerk's Office
R.)	Emergency Management
S.)	Fire Marshals
T.)	H.I.D.T.A. Task Force
U.)	Human Resources
V.)	Juvenile Justice Center
W.)	Public Defender's Office
X.)	Safety Division
Y.)	Sheriff's Office-Jail Dept
	Sheriff's Office-Law Enforcement Dept
Z.)	Tax Assessor Collector's Office
	Auto License/Automobile dept plus all substations
AA.)	Treasurer's Office

TERMS & CONDITIONS:

1. Term of contract is for one (1) year period with County's option to renew the contract for an additional two (2) one (1) year terms, under the same rates and conditions.

2. County reserves the right to continue this bid for an additional sixty (60) day grace period at the end of the contract term for unforeseen delay in award of new bid for next contract term.

3. Hidalgo County has the authority to utilize State Contracts and cooperative purchasing whenever it is in the County's best interest to do so.

4. Hidalgo County reserves the right to add or delete items during the term of the contract under the same rates and conditions.

5. Hidalgo County reserves the right to award the bid to MULTIPLE bidders if the County determines it is in its best interest to do so.

6. Insurance requirements for this project to be maintained through out the contract term **(Refer to limits on the Exhibit "C" for limits).**

7. After bid is awarded, if low bidder default in meeting the general instructions to bidders and/or comply with contract agreement, Hidalgo County reserves the right to seek services from the next low bidder. In such event, County shall charge the successful bidder the difference for any additional cost of such item.

ADDITIONAL INFORMATION:

1) Hidalgo County is requesting that any and all questions, inquiries, and all clarifications regarding quotes, bids, proposals, or statements of qualifications be addressed to Martha L. Salazar, CPPB, Purchasing Agent, 2812 South Business Highway 281, Edinburg, Texas 78539. ***TELEPHONE CALLS WILL NOT BE ACCEPTED!***

2) All costs and expenses associated with the preparation and submission of bids shall be the responsibility of the bidder and no reimbursement for such charges shall be passed onto Hidalgo County.

3) **ALL WRITTEN INQUIRIES WILL BE ACCEPTED VIA EMAIL** to sandra.montalvo@co.hidalgo.tx.us by no later than **Wednesday, April 29, 2015 by 5:00 p.m.** Responses to said inquiries will be sent to all applicants via email by no later than **Friday, May 1, 2015 by 5:00 p.m.**

EXHIBIT "B"

BID PAGE

HIDALGO COUNTY

"General Printing Services & Related Supplies"

BID NO: 2015-029-05-06-SMA

METHOD OF DELIVERY:

F.O.B. INSIDE DELIVERY _____ **THIRD PARTY DELIVERY** _____

A) 92ND JUDICIAL DISTRICT COURT

	DESCRIPTION		Estimated Qty	UNIT PRICE
1.	*BUSINESS CARDS*	3½" X 2",80# linen card stock-natural Black(raised)Lettering, w/Gold raised Seal , Single sided print, landscape layout	500 per order	
2.	*ENVELOPES W/LOGO*	Size: 9 ½ X 4 ⅛" , #10 linen-Natural Standard Envelopes, black ink (raised) Print and Gold (foil) seal 500 per box 24 lb	2 boxes of 500	
3.	*LETTERHEAD PAPER*	8.5" X 11", #24 linen-natural, one sided print, black (raised) ink print , seal gold(foil), 500 sheets per ream 24 lb 25 % Cotton	1,000	
4.	*ORDER OF RELEASE/ ORDER OF COMMITMENT*	8.5" X 11" Paper Size, three (3) part NCR, Paper sequence all three parts white paper, 1 page **only** front and back print, 2nd and 3rd page front only, Top Glue Bind	2,000/3 part	

B) 139TH JUDICIAL DISTRICT COURT

	Description			Estimated Qty	UNIT PRICE
1.	*BUSINESS CARDS*	3½" X 2", Black ink raised Lettering, w/gold raised seal, single sided print, landscape layout	foil seal	4 bxs. of 500	
			ink seal	4 bxs. of 500	
2.	*ENVELOPES W/LOGO*	Size 4 ⅛" x 9 ½", White Linen Standard Envelopes, raised Print, black ink and Gold ink foil seal		2 boxes of 500	
3.	*LETTERHEAD PAPER*	8.5" X 11", #20 White Linen Fine quality Bond Paper one sided print, flat black ink print , gold ink foil stamp seal		4 reams of 500	
4.	*ORDER OF RELEASE/ORDER OF COMMITMENT*	8.5" X 11" Paper Size, three (3) part NCR, Paper sequence all three parts white paper, 1 page **only** front and back print, 2nd and 3rd page front only Top Glue Bind		2,000/3 part	

C) 206TH JUDICIAL DISTRICT COURT

	Description		Estimated Qty	Unit Price
1.	*BUSINESS CARDS*	3½" X 2", Black ink Raised Lettering, w/Gold Raised Seal , Single sided print, landscape layout white Linen	1,000	
2.	*COURT ORDER MODIFYING CONDITIONS OF BOND*	8½" X 11" Page Size, 3 Part NCR, Black Ink Printing, Paper Color Sequence: White, Canary Yellow	1,000/3 part	
3.	*ENVELOPES W/LOGO*	size 4 ⅛" x 9 ½", standard envelopes, raised print, black ink and gold for seal 24 lb 25 % cotton	2 boxes of 500	
4.	*JUROR TAGS*	3½" x 2", Black flat Print, Red Paper Stock, Laminated w/thumb grip clip	14	

5.	*JUROR'S HANDBOOK PAMPHLETS*	17 ½" X 9", Flat Print Black Ink – Double Sided, 4 fold pamphlet, Light Blue Paper 60 lb	1,000	
6.	*LETTERHEAD PAPER*	8.5" X 11" 25 % Cotton Paper8.5" X 11", #20 Fine quality Bond Paper, one sided print, raised black ink print , seal raised gold ink, 24 lb 25 % Cotton	2 reams of 500	
7.	*ORDER OF RELEASE/ORDER OF COMMITMENT*	8.5" X 11" Paper Size, three (3) part NCR, Paper sequence all three parts white paper, 1 page only front and back print, 2nd and 3rd page front only, Top Glue Bind	2,000/3 part	

D) 332nd JUDICIAL DISTRICT COURT

	Description		Estimated Qty	Unit Price
1.	*BUSINESS CARDS*	3½" X 2", Black ink Raised Lettering, w/Gold Raised Seal , Single sided print, landscape layout	500	
2.	*ENVELOPES W/LOGO*	Size 4 ⅛" x 9 ½", Standard Envelopes flat black Print, and flat black ink for sea	2,500	
3.	*INSTRUCTIONS TO JURORS IN CIVIL CASES*	5 ½ x 7" folded in half printed in black front and back in and out of	2,500	
4.	*LETTERHEAD PAPER*	8.5" X 11" 25 % Cotton Paper- flat Print, black/gray ink	1,000	
5.	*ORDER OF REFERRAL FOR MEDIATION:*	8.5" X 11" 25 % Cotton Paper- Printed in front page in Black only	2,000	
6.	*ORDER OF RELEASE/ORDER OF COMMITMENT*	8.5" X 11" Paper Size, three (3) part NCR, White, Yellow, Pink 1st page only front and back print, 2nd and 3rd page front print only------ 2 hole punch on top	2,500	

E) 370th JUDICIAL DISTRICT COURT

	Description		Estimated Qty	Unit Price
1.	*ENVELOPES W/LOGO*	Size 4 ⅛" x 9 ½", Standard Envelopes, raised Print, black ink and Gold for seal 500 per box	1,000 per order	
2.	*LETTERHEAD PAPER*	8.5" X 11", #20 Fine quality Bond Paper one sided print, flat black ink print , gold ink foil seal, 500 sheets per ream 25 % cotton	1,000 per order	

F) 398th JUDICIAL DISTRICT COURT

	Description		Estimated Qty	Unit Price
1.	*BUSINESS CARDS*	3½" X 2", Ink -Black and Red Raised Lettering, w/Gold foil Seal , Single sided print, landscape layout	5 box of 500	
2.	*ENVELOPES W/LOGO*	Size 4 ⅛" x 9 ½", Standard Envelopes, Ink – Black and Red raised Print, black ink with Gold seal foil	6 boxes of 500	
3.	*LETTERHEAD*	8.5" X 11", #20 Fine quality Bond Paper, one sided print, raised black and red ink print , seal gold foil 25 % cotton (1st page	6 reams of 500	
4.	*ORDER OF RELEASE/ORDER OF COMMITMENT*	8.5" X 11" Paper Size, three (3) part NCR, Paper sequence all three parts white paper, 1 page only front and back print, 2nd and 3rd page front only (same as page one) Top Glue Bind	3,000 3-Part	

G) 430th JUDICIAL DISTRICT COURT

	Description			Estimated Qty	Unit Price
1.	*BUSINESS CARDS*	3½" X 2", BLUE ink Raised Lettering, w/Gold Raised Seal, Single sided print, landscape layout	foil	500	
			ink	500	
2.	*BUSINESS CARDS, double sided print, landscape layout*	(BAILIFF) 3½" X 2", BLUE ink Raised Lettering in the front w/Gold ink Seal, DOUBLE sided flat print in the back , landscape layout		500	
3.	*ENVELOPES W/LOGO*	Size 4 ⅛" x 9 ½", Standard Envelopes, Ink – Black and Red raised Print, black ink with Gold seal 25 % cotton		1000	
4.	*JUROR'S HANDBOOK PAMPHLETS*	17 ½" X 9", Flat Print Black Ink – Double Sided, 5 fold pamphlet, Light BLUE Paper		500	
5.	*LETTERHEAD*	8.5" x 11" Cotton Paper #20 Fine quality Bond Paper, one sided print, raised BLUE ink print , seal raised gold ink, 500 sheets per ream 25% cotton		1000	
6.	*ORDER OF RELEASE/ORDER OF COMMITMENT*	8.5" X 11" Paper Size, three (3) part NCR, Paper sequence all three parts white paper, 1 page <u>only</u> front and back print, 2nd and 3rd page front only (same as page one) Top Glue Bind		3,000 3-Part	

H) ADULT PROBATION DEPARTMENT

	Description		Estimated Qty	Unit Price
1.	*APPOINTMENT CARDS*	Letter Size Page (8½" X 11"), black ink printing w/black ink logo, 6 cards per page, 110 lb. paper, double sided print cut into 8 cards	10,000 per year	
2.	*ASSESSMENT APPOINTMENT FORM*	Letter size page 20lb. light yellow paper, cut in 2 parts-double sided print-black ink	6,000 per year	
3.	*BUSINESS CARDS*	3½" X 2", Black ink Raised Lettering, w/ Raised Gold Seal and lettering, Single sided print-500 per box, landscape layout	5,000 per year	
4.	*COMMUNITY SERVICE RESTITUTION (CSR) ID CARD*	Letter Size Page (8½" X 11")Page Size, 110 lb. paper 4 cards per page, Black ink printing, double sided print, cut into 4 cards	6,000 per year	
5.	*COURT INFORMATION FORM*	Letter Size Page (8½" X 11), 20 lb. Paper-double sided print, black ink printing	5,000 per year	
6.	*COURT NOTES*	Letter Size Page (8½" X 11), single sided print, black ink printing	4,000 per year	
7.	*DELINQUENT LETTER for DEFENDANT*	Letter Size Page (8½" X 11")-Black ink printing-Double sided print English/Spanish	15,000 per year	
8.	*ENVELOPES W/LOGO*	#10 No Window Envelope. (4 ⅛" x 9 ½"), Standard Envelopes, flat black print, w/ black flat print seal 500 per box, with no window	40,000 per year	
9.	*ENVELOPES W/LOGO*	Size (4 ⅛" x 9 ½"), Standard Envelopes, flat black print, w/ black flat print seal 500 per box, with window,	20,000 per year	
10.	*ENVELOPES W/LOGO*	Custom Size (3 ⅝" x 8 ⅝") Special Window (3" across by 1 down) Black ink Inside Blue Tint	30,000 per year	
11.	*FAMILY HISTORY INFORMATION*	Letter Size Paper (8½" X 11") 20 lb, double sided –Flat Black ink print, English/Spanish	6,000 per year	
12.	*HOME VISIT CARDS*	Letter Size Page (8½" X 11"), Double sided print, black ink flat print, 110 lb. paper, 6 cards per page, cut into 6 cards-English/Spanish	10,000 per year	
13.	*INTAKE APPT. REFERRAL*	Letter Size Page (8½" X 11"), Double sided print, black ink flat print- light green 20 lb	8,000 per year	
14.	*MONTHLY REPORT*	Letter Size Page(8½" X 11"), Double sided print, black ink printing	6,000 per	

	(by mail)	English/Spanish	year	
15.	*PAMPHLETS*	Letter Size Page (8½" X 11"), Tri Fold-Glossy 32 lb paper, Double sided flat multi color print, Premium Presentation Paper	20,000 per year	
16.	*RECEPTIONISTS SLIPS*	Letter Size page (8½"x11"), 20lb White Paper, Black flat print, cut in 8 parts	20,000 Per year	
17.	*TRAVEL PERMIT SLIPS*	Letter Size Page (8½" x 11") Double Sided Print, Black flat print 110 lb paper, cut into 4.	10,000 Per year	

I) AUDITOR'S OFFICE

	Description		Estimated Qty	Unit Price
1.	*LETTERHEAD PAPER*	8.5" X 11", #24 lb Fine quality Bond Paper, one sided print, flat black ink print, watermark gray seal w/ light, dark gray and black shading 500 per ream: 25% Cotton (1st page)	2,000	
2.	*LETTERHEAD PAPER*	8.5" X 11", #24 lb Fine quality Bond Paper, one sided print, flat, w/gray watermark seal 500 per ream 25% Cotton (continuation page)	500	

J) PRECINCT 3

Commissioner Joe Flores

	Description		Estimated Qty	Unit Price
1.	*BUSINESS CARDS*	3½" X 2", Ink -Black Raised Lettering, w/Gold Foil Seal, Single sided print, portrait business card layout, 500 per each	1 box of 500	
2.	*ENVELOPES W/LOGO*	Size 4 ⅛" x 9 ½", Standard Envelopes, flat Print, black ink and black ink seal 500 per box	2 boxes /500	
3.	*LETTERHEAD PAPER*	8.5" X 11", #20 Fine quality Bond White Linen Paper one sided print, raised blue ink print , gold foil stamp seal w/blue lettering, 500 sheets per ream	2 boxes /500	
4.	*LETTERHEAD PAPER*	8.5" X 11", White Linen Paper Blue ink	2 boxes /500	
5.	*PARKING PERMIT*	3½" x 5 ½" Single sided print, White paper w/red lettering, glue bind top, 50 sheets per booklet perforated at the top 2 staples	12/50 sheets	

K) CONSTABLE PRECINCT 1

	Description		Estimated Qty	Unit Price
1.	*BUSINESS CARDS*	3 ½" x 2", Blue Ink, w/Watermark Seal (twelve individuals) Single sided flat print, Landscape layout 12KK CIS	500 per box	
2.	*NOTICE/AVISO– DOOR HANGER CARD*	8 ½" x 3 ¾" Black Ink, Double Sided flat print (English one side/Spanish other side) Neon Yellow Card Stock w/die cut	5,000	
3.	*TICKET BOOK*	5 ¼" x 7 ¾" – 4 Part NCR, Paper Color Sequence-White, canary yellow, pink and golden rod, double sided print, black ink flat print, number sequence in red ink, 50 sheets per book wrap around perforated, Starting #**varies** Top Bind	200 books of 50 pages per bk	
4.	*VEHICLE IMPOUNDMENT INVENTORY RECORD*	7 ½" x 5", 4 Part NCR, Paper Color Sequence- White, Canary Yellow, Pink and Golden Rod, Black Ink, Single Sided flat print, 25 sheets per book wrap around perforated	100 bks of 25 sheets per bk	

L) CONSTABLE PRECINCT 2

	Description		Estimated Qty	Unit Price
1.	*BUSINESS CARDS*	3½" X 2", IVORY Black ink Raised Lettering, w/Seal, Single sided print, landscape layout 80 lb	14 bxs of 500	
2.	*ENVELOPES*	Size 4 ⅛" x 9 ½", Standard Envelopes, Flat Print, Black Ink,	4 boxes of 500	
3.	*LETTERHEAD PAPER*	8.5" X 11",White or Ivory Linen paper and full color printing, one sided print, flat Print, black/gray ink, watermark seal, 5,000 sheets per box	2 boxes	
4.	*OFFICIAL RECEIPTS for CONSTABLES FEES*	3 part NCR – Paper Color Sequence– White, Canary Yellow, Pink, Black ink, single sided flat print Number Sequence black ink, three (3) Receipts per page, 100 sheets per book, 50 sets per book ;Die cut (tear out rcpt) wrap around perforated, Side Glue Bind	3 books	
5.	*TICKET BOOK*	5¼" x7 ¾" – 4 Part NCR, Paper Color Sequence- White, canary yellow, pink and golden rod, double sided print, black ink flat print, number sequence in red ink, Top Bind	50 books of 20 sheets per bk	
6.	*WARNING FLYERS/ ADVERTENCIA FLYERS*	Size: 8 ½" x 11", Peel Stick, Neon Yellow, Black ink one sided flat print (english / Spanish)	4 boxes of 5,000	

M) CONSTABLE PRECINCT 3

	Description		Estimated Qty	Unit Price
1.	*BUSINESS CARDS*	3½" X 2", Blue and Gold ink Raised Lettering, w/Seal two colors blue/gold, Single sided print, 500 per box, 8 individuals, landscape layout 80 lb	500 per box per order	
2.	*BUSINESS CARDS*	3½" X 2", Blue and Gold ink Raised Lettering, w/Seal two colors blue/gold, Single sided print, landscape layout 80 lb	2 boxes of 1000 per order	
3.	*ENVELOPES*	Size 4 ⅛" x 9 ½", Standard Envelopes, Flat Print, 2 color ink Blue and Gold, 2 color seal (Blue and Gold 500 per box	4 bxs /500 per order	
4.	*LETTERHEAD PAPER*	8.5" X 11", #20 Bond Paper White Linen 92 Brightness one sided print, flat Print, 2 Color Ink Blue/Gold),w/seal (gold/blue), 500 sheets per ream	4 reams per order	
5.	*NOTICE/AVISO- DOOR HANGER CARD*	8½"x3¾";Black Ink, Double Sided flat print (English one side - Spanish other side) Neon Orange Card Stock w/die cut	2,000 per order	
6.	*OFFICIAL RECEIPT FOR CONSTABLES FEES*	3 part NCR – Paper Color Sequence White, Canary Yellow, Pink, Black ink, single sided flat **print ,Number Sequence black ink**, three (3) Receipts per page, 100 sheets per book, 50 sets per book ;Die cut (tear out receipt) Side Glue Bind;	2 books	
7.	*TICKET BOOK*	5 ¼" x 7 ¾"–4 Part NCR, Paper Color Sequence-White, canary yellow, pink and golden rod, double sided print, black and red ink flat print, number sequence in red ink, 25 sheets per book, Top Glue Bind	40-booklets per order	
8.	*VEHICLE IMPOUNDMENT INVENTORY RECORD*	7 ½" x 5", 4 Part NCR, Paper Color Sequence- White, Canary Yellow, Pink and Golden Rod, Black Ink, Single Sided flat print, 25 sheets per book wrap around	80/25 per bk per order	
9.	*WARNING BOOK*	2 parts NCR, paper color sequence-white , golden rod, wrap around cover perforated, 50 sets double sided print, black and red ink flat print, number sequence in red ink,	50 sets per book	
10.	*WARNING FLYERS/ ADVERTENCIA FLYERS*	ENGLISH-Size 8 ½" x 11", Peel Stick, Neon Orange, Black Ink one sided flat print; SPANISH-Size 8 ½" x 11", Peel Stick, Neon Limeade Green, Black Ink one sided flat print	750 sheets per order	
11.	*WARNING NOTICE TO VACATE*	Size 8½" x 11, Peel Stick, Neon Yellow, Black Ink one sided flat print,	750 sheets per order	

N) COUNTY CLERK'S OFFICE

	Description		Estimated Qty	Unit Price
1.	***BUSINESS CARDS***	*SUPERVISORS* -3½" x 2",Gray linen, 2 ink, double sided, black seal with blue lettering, raised lettering 500 per box landscape layout	30 boxes of 500 per order	
2.	***BUSINESS CARDS***	*COLLECTORS* -3½" x 2", White smooth card, 2 ink, double sided, black seal with blue lettering, raised lettering 500 per box landscape layout	2,500 per order	
3.	***BUSINESS CARDS***	*GENERAL OFFICE* -3½" x 2",Double Sided, 2 inks, fronts has raised black seal, blue ink raised lettering, w/black raised seal and lettering back side flat back letters, 500 per box, landscape layout	30 boxes of 500 per order	
4.	***CLERK'S REPORT CARD***	Index Card-4"x 6 ½", 110# Index, 1 ink, black, flat lettering, one side	1,000 per order	
5.	***ENVELOPES*** no window	**SMALL-#28** White wove, white envelopes, 7 ½" x 10½", Blue ink flat lettering, with black seal , peel and seal , without window, 2 inks, one sided flat print, black seal w/blue flat lettering,	6,000 per order	
6.	***ENVELOPES*** no window	**MED-#28**-White wove , white envelopes , 12" x 9" Blue ink flat lettering, with black seal, peel and seal , without window, 2 inks, one sided flat print, black seal w/blue flat lettering,	6,000 per order	
7.	***ENVELOPES*** no window	**LARGE-#28**-White wove, white envelopes,12"x15 ½" Blue ink flat lettering, with black seal, peel and seal, without window,2 inks, one sided flat print, black seal with blue flat lettering	6,000 per order	
8.	***ENVELOPES COLLECTIONS*** with window	Size 4 1/8" x 9 ½ ", #10 Standard white envelopes with window, 1 ink-black logo & black flat lettering on one side, self seal	30 boxes of 500 per box	
9.	***ENVELOPES COLLECTIONS-*** with window	Size 4 1/8" x 9 ½ ", #24 envelopes with window #24 Canary yellow, 2 ink, one sided flat print, black seal w/ black flat lettering and red **"FINAL NOTICE"**, self seal, black logo & black flat lettering on one side, self seal,	30 boxes of 500per box	
10.	***ENVELOPES-OFFICE*** with window	Size 4 ⅛" x 9 ½",#10 Standard Envelopes with window 2 inks, one sided flat print, black seal with blue flat lettering, , (peel and seal)	30 boxes of 500 per box	
11.	***ENVELOPES-OFFICE*** without window	size 4 ⅛ x 9 ½,#10 standard envelopes, no window, 2 inks, one sided flat print, black seal with blue flat lettering (peel and seal)	30 boxes of 500 per box	
12.	***LETTERHEAD PAPER***	#20- 8.5" X 11", Fine quality White Bond Paper 25 % cotton, one sided flat print, black seal with blue flat lettering, watermark seal, 500 per ream,	30 reams of 500 sheets	
13.	***NEWLYWED LETTER***	#70- 8.5" x 11", fine quality white bond paper, 2 color front and 2 color back, blue//black ink, double sided, flat print (english & Spanish) 60 lb	10,000ea	
14.	***RECREATIONAL REGULATIONS CARDS***	FISHING-3½" x 2" double sided print, black, blue, red , green ink, shading-light blue	1,000 ea	
		HUNTING-3½" X 2", Double sided print, black, blue, green ink, shading light blue	1,000 ea	
15.	***SCRATCH PADS***	Note pad 80 pages per tablet -4 ¼"X 7", 500 count 2 inks, one sided flat print, black seal with blue flat lettering round corners	500 pads	

O) COUNTY COURT AT LAW # 6

Judge Albert Garcia

	Description		Estimated Qty	Unit Price
1.	*BUSINESS CARDS*	3 ½" x 2", BLUE Raised Lettering, with Gold Ink Seal, Single sided Print, Portrait Landscape Layout, 500 per box 25 % cotton	1,000	
2.	*ENVELOPES- without window*	size 4 ⅛" x 9 ½", standard envelopes, raised print, blue ink w/ gold ink seal 500 per box, no window 25 %cotton	1,000	
3.	*LETTERHEAD PAPER*	8.5" x 11", #20 fine quality bond paper one sided print, raised blue ink print gold ink stamp seal,25%cotton	5,000	

P) DISTRICT ATTORNEY

	Description		Estimated Qty	Unit Price
1.	*AUTHORIZATION FOR MEDICO LEGAL EXAMINATION*	8.5" X 11" Paper size, 3 Part NCR, Paper color sequence-White, Canary Yellow and Pink, Black ink printing, Single sided print	1,000	
2.	*CHECK WRITER FLYERS*	9.5" X 11" Letter size paper, Canary Yellow Paper w/ white and red lettering on black background, Heavy weight paper, coated 80-110 lb. paper	500	
3.	*CHECKS RECEIPT*	8.5" X 11" Letter size Paper, watermark gray seal and lettering, 2 receipts per page, Perforated	5,000	
4.	*CRIMINAL MANILA FOLDERS*	Legal Size, Folder Stock, End tab, ½ Cut Folders w/ black ink print, 1,000 per box... Felony	10 boxes of 1,000	
5.	*MANILA FOLDER*	Special die cut end with printing	10,000	
6.	*MISDEMEANOR COMPLAINTS*	8.5" X 11" Letter size paper,3-part NCR, Black ink printing, continuous feed pink, canary, blue	10,000	
7.	*VICTIM IMPACT STATEMENT*	8.5" X 11" Letter size paper, black ink print w/Gold Seal and lettering seal, double sided print 60 lb 2 color front 1 color back	5,000 per year	
8.	*WORTHLESS CHECK AFFIDAVIT*	2 part NCR, Paper color sequence white and pink, one sided flat print, black ink only	9000	

Q) DISTRICT CLERK'S OFFICE

	Description		Estimated Qty	Unit Price
1.	*ENVELOPES- with window*	Size 4 ⅛" x 9 ½", standard envelopes, flat print, gray and black ink white lettering and black ink seal, with window	20,000	
2.	*ENVELOPES- without window*	Size 4 ⅛" x 9 ½", standard envelopes, flat print, gray and black ink white lettering and black ink seal, with window no windows	20,000	
3.	*ENVELOPES-with window*	Size 4 ⅛" x 9 ½", Standard Envelopes, flat Print, Black and Red ink and black ink seal, **Light Blue Envelopes**, with Window	120,000	
4.	*ENVELOPES- without window*	Size 3.875x 8.875", Standard Envelopes# 9-24, flat Print, black ink and watermark seal, Canary Yellow Envelopes, No Windows; black flat lettering on one side, self seal, additional operation: send away envelope	120,000	
5.	*ENVELOPES- without window*	#28-White wove, white envelopes, 12" x 9" Gray & Black ink flat lettering, with without window,, one sided flat print, white seal w/black flat lettering,	5,000	
6.	*JURY SUMMONS FORM*	Size 8.5"x14"; #24 White paper Red & black inks; partial vertical and horizontal perfs for badge; 2 sided	60,000	
7.	*LETTERHEAD PAPER*	8.5" X 11",Recyled Bond Paper; one sided flat print, with black flat lettering, watermark seal, ,	20,000	

R) EMERGENCY MANGEMENT

	Description		Estimated Qty	Unit Price
1.	*BUSINESS CARDS*	3 ½" x 2", BLUE Raised Lettering, with Gold Ink Seal, Single sided Print, Portrait Layout, 500 per box 25 % cotton	1,000	

S) FIRE MARSHAL

	Description		Estimated Qty	Unit Price
1.	*BUSINESS CARDS*	3 ½" x 2", black flat lettering, with Gold Ink Seal & badge blue flat lettering, double sided Print, landscape Layout, 500 per box 25 % cotton Full color, Printed on two sides, White Stock	1,000	

T) H.I.D.T.A. TASK FORCE

	Description		Estimated Qty	Unit Price
1.	*BUSINESS CARDS*	3½" X 2", Black ink Raised print, w/ gold raised seal, Single sided print-500 per box, landscape layout 80 lb cover	500 bx	
2.	*DIVIDERS MULTI-COLOR*	9"x11" - 8 Tab Dividers per set, labeled, Multi Color	400 scts	
3.	*ENVELOPES-without window*	Size 4 ⅛" x 9 ½", Standard Envelopes, raised black print, w/gold raised ink seal 500 per box, without window 24 lb 25 % Cotton	1,000	
4.	*INVESTIGATIVE FILE JACKET*	Page size: 9" x12 7/8 , Canary Yellow Tag Board, Black ink front & back of front cover page only **back page blank** w/ two hole punch on top (centered) 140 lb(case file covers)	1,000 per order	
5.	*INVESTIGATIVE FILE JACKET*	9"X12 7/8 " Page size, Light Blue Tag Board, Black ink front & back of front cover **back page blank** w/ two hole punch on top (centered) 140 lb (case file covers)	1,000 per order	
6.	*LETTERHEAD PAPER*	8.5" X 11", Fine quality paper, Raised lettering, black ink, gold raised seal 500 per ream 24 lb 25 % Cotton	1000 per order	
7.	*MAILING LABELS*	3"X4" flat print, black ink w/gold ink stamp, 500 per roll	500 per roll	
8.	*NAME PLATE*	Wood Base, w/Black, brass double mounted, w/2 seals , w/name and title	On as needed basis	
9.	*RECEIPT FOR FORMS*	8.5" X 11" Page size, 2-part NCR, Paper sequence: White and Canary Yellow, Black ink flat print, one sided print	500	
10.	*VEHICLE IMPOUNDMENT REPORT*	8.5" X 11.5" Page size, 3-part NCR, Paper Sequence: White, Canary Yellow and Pink, black ink flat print, one sided print perforated	500	

U) HUMAN RESOURES

	Description		Estimated Qty	Unit Price
1.	*BUSINESS CARDS*	3½" X 2", Blue ink Raised Lettering, w/ gold ink stamp w/blue Raised lettering, Single sided print-500 per box, landscape layout White Linen 80lb	500 per box	
2.	*ENVELOPES W/LOGO*	Size 4 ⅛" x 9 ½", Standard Envelopes, flat blue, w/ gold foil stamp seal 500 per box, plain with no window White Linen 24lb	4 boxes of 500 ea box	
3.	*LETTERHEAD PAPER*	8.5" X 11", Fine quality bond paper, blue lettering w/ gold foil stamp w/blue lettering, w/watermark print, 500 per ream White Linen 24 lb	20 reams of 500	

V) JUVENILE JUSTICE CENTER

	Description		Estimated Qty	Unit Price
1.	*ENVELOPES-no window*	Size 4 ⅛" x 9 ½", Standard Envelopes, flat blue lettering, w/ gold ink seal w/blue flat lettering seal 500 per box, Plain no window envelope	20 boxes of 500 per order	
2.	*LETTERHEAD PAPER*	8.5" X 11", #20 Fine quality White Bond Paper, one side print, flat print blue, gold ink seal w/ blue, flat lettering, 500 per ream 24 lb 25 % cotton	24 reams per order	

W) PUBLIC DEFENDER'S OFFICE

	Description		Estimated Qty	Unit Price
1.	*BUSINESS CARDS*	Size: 3½" X 2", Black ink raised lettering, w/ raised gold seal and lettering, Single sided print-500 per box, landscape layout	25 boxes of 500	
2.	*ENVELOPES- with window*	Size 4 ⅛" x 9 ½", Standard Envelopes, flat print blk, foil gold County seal with window envelope	8 box of 500	
3.	*ENVELOPES- without window*	Size 4 ⅛" x 9 ½", White Wove , Standard Envelopes, flat print blk, Gold foil County seal without window	8 box of 500	
4.	*LETTERHEAD PAPER*	8.5" X 11", #20 Fine quality White Bond Paper-Ivory, one sided print, flat print blk, foil gold County seal	3 Reams of 500	

X) SAFETY DIVISION

	Description		Estimated Qty	Unit Price
1.	*ENVELOPES- without window*	size 4 ⅛" x 9 ½", standard envelopes, raised print, blue ink w/ gold ink seal 500 per box, no window 25 %cotton	1,000	

Y) SHERIFF'S OFFICE

(Jail Dept)

	Description		Estimated Qty	Unit Price
1.	*BAIL BOND FEE REFUND FORMS*	8½" X 11" Page Size, Single sided print, black ink print, 3-Part NCR, Paper Color Sequence: White, Canary Yellow, Pink, 2-Hole Top Center Punch, With Number sequence in the upper right hand corner, top binding snap	300	
2.	*INMATE REQUEST FORMS*	8½" X 11" Page Size, Single sided print, black ink print, 3-Part NCR, All copies white paper, top binding all white snap	30,000 ea	

(Law Enforcement Dept.)

	Description		Estimated Qty	Unit Price
3.	*ADMINISTRATIVE ACTION FORM*	Size 8 ½"x5", Single sided print, black ink print, 2-Part NCR, Paper color sequence: White, Canary Yellow, top glue	10,000	
4.	*BUSINESS CARDS*	3 ½"x2"; 2 sided front and back-Front side gold sheriff's emblem on the left hand side with black raised letters with room enough for each individual's name centered fax #, phone # and email address Back side all black letters (cream linen)	1 box of 250	
5.	*BUSINESS CARDS*	3 ½" x 2" 1 sided gold sheriff's emblem on the left hand side with black raised letters with room enough for each individual's name centered fax #, phone # and email address (cream linen)	1 box of 250	
6.	*CHECKS*	check size: 8.25"x3.5"; blue safety; black ink; 3 to sheet with	300 qty	

	Sheriff's Fee Account	voucher, numbered; 300 qty above 3 on yields 900 checks		
7.	*CHECKS Sheriff's Trust Fund*	check size: 8.25"x3.5"; yellow safety; black ink; 3 to sheet with voucher, numbered; 300 qty above 3 on yields 900 checks	300 qty	
8.	*CHILD ID CARD*	8 ½"x5½" Manila stock paper, 2 color dark blue (possibly 000033 or 000066) with seal gold/blue color w/double sided tape ½'x2" back to Back printing, score across center of paper	5,000	
9.	*CITATION BOOKS*	Size: 8 ½"x5", top binding (Perforated) Black ink print and red ink, 4 carbonless paper with each one having it's only individual printing in the back, (1st white paper with black and red ink, 2nd yellow paper with black and red ink, 3rd pink paper with black and red ink, and 4th paper blue paper with black and red ink. With Sheriff's logo (Blk) in the middle of each carbonless paper. Wrap around book	25 per book 250 books	
10.	*CIVIL and WARRANTS WRIT of POSSESSION NOTICE*	Letter Size, 8½"x11" Card Stock Single sided print, red ink print, Label stock	1,000	
11.	*DEPOSIT SLIP BOOKS Sheriff's Fee Account*	2-part carbonless; black ink (white, canary) 50 sets per book; 800 qty above yields- 800 slips, 16 books, 50 sets per book	16 books	
12.	*DEPOSIT SLIP BOOKS Sheriff's Trust Account*	2-part carbonless; black ink (white, canary) 50 sets per book; 800 qty above yields- 800 slips, 16 books, 50 sets per book	16 books	
13.	*DEPUTATION*	8.5 x 14.; 24# bond, reflex blue and black ink on 2 sides, shrink wrap in 500's 20lb	300	
14.	*DIC-24 Statutory Warning*	8.5 x11, 15#cb white, 14.5#cf yellow carbonless paper, black ink 1 side, shrink wrap in 250's	100	
15.	*DIC-25 Notice Of Suspension*	Temp. Driving Permit--8.5x 11, 15#cb white, 14.5#cf yellow, carbonless paper, black ink 2 sides, shrink wrap in 250's 2 part padded	100	
16.	*ENVELOPE*	5 ½" x 3¼", Manila Envelope, Black ink, front side print	3,000	
17.	*ENVELOPE – Latent Print*	size: 6½"x3½", White Envelope, Black Ink, One front side print	2,000	
18.	*EVIDENCE CARDS*	5" x 4¼" Card Stock, White Paper, Single sided print, Black ink 67 lb	6,000	
19.	*EVIDENCE/INVENTORY CONTROL REPORT*	Legal Size Paper, 8½"x14" Page Size, Single sided print, black ink print, 3-Part NCR, Paper Color Sequence: White, Canary Yellow, Pink,	1,000	
20.	*FIELD INTERVIEW CARDS*	8½"x5 ½" Page Size, double sided print, black ink print, Hidalgo County Sheriff's emblem on the upper left hand corner. (front) (back) SYNOPSIS: 13 LINES	5,000	
21.	*IMPOUND BOOKS*	8" x 5" sheet top binding (Perforated) with a manila cover 8", Black Ink, 4 part carbonless sheets 1st is white, 2nd is yellow, 3rd pink, and 4th orange with no printing in the back wrap around book white, yellow , pink, orange	25 per book 100 books	
22.	*JR. SHERIFF BADGE STICKERS*	3" Roll, black background with Gold Foil Seal	5,000 sticker	
23.	*LATENT FINGERPRINT INDEX CARD*	Size 3"x5", White, Black ink print, front side print	5,000	
24.	*MAINTENANCE BOOKS*	size: 9"x5 ½", 1st White carbonless paper, 2nd yellow paper, Black ink, front print top binding (Perforated)	25 per bk 250 bks	
25.	*MOTOR POOL Service Request*	8 ½" x3¾" Blk lettering	1,000	
26.	*MOTOR POOL- Service Request Sticker*	4"x2" Blk Lettering roll	1,000	
27.	*NAME PLACEMENT CARD*	10"x 8"- Beige card stock (FFCC66) Ink color dark brown (possibly 663300 or 330000), Score across center of card	500	
28.	*OFFENSE REPORTS Property Reporting*	8½"x11" Page Size, White Paper, single sided print, Black ink 20lb	10,000	
29.	*OFFENSE REPORTS- NARRATIVE*	8½"x11" Page Size, White Paper, Single sided print, black ink print 20lb	40,000	
30.	*OFFENSE/INCIDENT REPORTS- Front and Back*	8½"x11" Page Size, White Paper, double sided print, Black ink 20 lb	30,000	
31.	*OFFICIAL*	3"x2½", White label stock, Black ink, front side print	2,000	

	PHOTOGRAPH			
32.	*OPERATION CHILD SAFEGUARD*	17x22" Poster: Full Glossy Color 80lb glossy cover	500	
33.	*OPERATION CHILD SAFEGUARD FLYERS*	8½"x11" Page Size, 80 lb gloss cover paper 4 color process	5,000	
34.	*RECEIPT BOOK- Inmate Trust*	7.25x11 (4 up manifold Book/Numbered) 3 part carbonless (white, yellow, pink) NOTE 3rd. page without manifold Black 1-side, All parts the same 4 up receipt book, Repeat order sequential number.	50 sets per book 200	
35.	*RECEIPT BOOK- Official Receipt for Sheriff's fee's*	17"x8.5" (individual. receipt size 8"x4.25")3 part NCR white, green, canary; blank ink; 4 on a sheet, numbered receipts3pt with perfing white & green copy only, wrap around covers; 5,000, above yields (100 books, 50 sets/200 receipts per books)	100 books	
36.	*RECEIPT BOOK- Official Receipt for Sheriff's Trust Funds*	17"x8.5" (individual. receipt size 8"x4.25")3 part NCR white, green, canary; blank ink; 4 on a sheet, numbered receipts3pt with perfing white & green copy only, wrap around covers; 5,000, above yields (100 books, 50 sets/200 receipts per books)	100 books	
37.	*RECRUITMENT FLYERS*	8½"x11" Page Size, 80lb gloss print 4 color both sides , tri-fold (score)	5,000	
38.	*THE STATE OF TEXAS STATEMENT OF ELECTED/ APPOINTED OFFICER*	8.5x11, 20# bond, reflex blue & black ink 1 side, pad in 100's shrink wrap in 500's	300	
39.	*TIME EARNED/ABSENCE REQUEST FORM*	8½"x11" Page Size, Single sided print, black ink print, 3-Part NCR, top binding (Perforated) Paper Color Sequence: Blue, Yellow Pink	5,000	
40.	*VICTIM'S BILL OF RIGHTS PAMPHLET*	8 ½"x5 ¾"- white card Ink color black to be folded (3) tri-fold (score) 110 lb	5,000	

Z) TAX ASSESSOR COLLECTOR

	AUTO LICENSE/TAX OFFICE		Estimate Qty.	Unit Price
1.	*BUSINESS CARDS*	3½" X 2", Black Ink Raised Lettering, w/ Gold Raised Stamp w/Gold Raised Lettering, Single Sided Print- Landscape Layout	1,000 per order	
2.	*BUSINESS CARDS*	3½" X 2", Black ink Raised Lettering, w/ gold raised stamp w/gold Raised lettering, Single sided print- landscape layout	500 per order	
3.	*ENVELOPES without window*	Size 3 7/8 x 8 7/8" *#9* return envelopes, flat black print, w/ black flat print seal 500 per box, plain with no window	5,000	
4.	*ENVELOPES without window*	Size 4 ⅛" x 9 ½", #10 Standard Envelopes , flat black print, w/ black flat print seal 500 per box, with NO window (TAX Assessor/Collector)	20,000 per order	
5.	*ENVELOPES with window*	Size 4 ⅛" x 9 ½", Standard Window, rev flap, 24# ww, diagonal seam, gum seal printed	60,000 per order	
6.	*LETTERHEAD PAPER*	8.5" X 11", Fine quality bond paper, black lettering w/ gray watermark seal w/picture in various stages of gray shade, 500 per ream 24 lb 25% cotton	5,000	
7.	*WATERMARK PAPER*	Letter Size Page (8.5"X11") Bound paper, bond, rely, Rio Grande Valley Watermark	100	
	AUTOMOBILE DEPT PLUS ALL SUBSTATIONS			
8.	*BUSINESS CARDS*	3½" X 2", Black ink Raised Lettering, w/ gold raised stamp w/gold Raised lettering, Single sided print-landscape layout	500 per order	
9.	*COUNTY LIQUOR PERMIT*	Letter size (8 ½" x 11"), 3-Part NCR –Paper sequence (white, canary & pink) #17 One sided print-flat print black and red only for, pre-numbered red and title of form	150 50 per pack	
10.	*DEPUTATION CARDS*	Size: (3.875" x 2.375") index card-light green paper stock # 110 black ink flat print, rounded corners 67 lbs	250	
11.	*ENVELOPES without*	Size 6 ⅛" x 12 ½"), Standard Brown Envelopes, flat black print, w/	7,500	

	window	black flat print seal 500 per box, without windows (auto license plate envelope)		
12.	*ENVELOPES without window*	Size (10 ½"x7 ½") Double-prong metal clasp w/reinforced eyelets for a secure closure Brown Clasp Envelopes/ 100 per box w/ black ink printing and black ink seal (TABC envelope)	10 bxs of 100	
13.	*LETTERHEAD PAPER*	8.5" X 11", Fine quality bond paper, black lettering w/ gray watermark seal w/picture in various stages of gray shade, 500 per ream25% Cotton	5,000	
14.	**REFUND SLIPS**	Size 7 x 3.25 off set , white 50# black padding with chipboard	3000 per order	

AA.) TREASURER'S OFFICE

	Description		Estimated Qty	Unit Price
1.	**BUSINESS CARDS**	3½" X 2", GREEN ink Raised Lettering, w/ GREEN Seal w/ GREEN lettering, Single sided, landscape layout 80lb cover	500 per box	
2.	**ENVELOPE -large window**	envelope 5 ½ x 8 ¾, 2 ¾" x 5 ½ " window ½" from left 5/8 from top on 20lb paper	5,000 per order	
3.	**ENVELOPES with window**	Size 4 ⅛" x 9 ½", Standard Envelopes, flat GREEN lettering, w/ GREEN and gold seal w/ GREEN flat lettering seal with window	5,000 per order	
4.	**ENVELOPES without window**	Size 4 ⅛" x 9 ½", Standard Envelopes, flat GREEN lettering, w/ GREEN and gold seal w/ GREEN flat lettering seal without window	5,000 per order	
5.	**LETTERHEAD PAPER**	8.5" X 11", #20 Fine quality Bond Paper, one sided print, flat GREEN ink print, foil gold seal w/ green flat lettering 500 per ream 24lb 25 % cotton	1 ream of 500	
6.	**RECEIPT–county seal**	8.5"x 11" with County Seal in black	15,000 per order	
7.	**TREASURY MANUAL RECEIPT BOOK**	8.5" X 11." Page size, 3-part NCR, Paper Sequence: White, Canary Yellow and Pink, black ink flat print, One sided print-flat print black and red only for, pre-numbered red 2-booklets; 50 sheets per book	2 booklets	

BIDDER'S INFORMATION:

I/We the undersigned hereby certify that I/We am/are a duly authorized official of the company and have the authority to sign on behalf of the company and assure that all statements made in the bid are true. I/We agree to furnish and deliver the specified items/services at the prices stated herein, and have read, understand, and agree to the terms and conditions contained herein and on all of the attachments.

COMPANY NAME: _____

ADDRESS: _____

CITY/STATE/ZIP: _____

PHONE NUMBER: _____

FAX NUMBER: _____

CELL NUMBER: _____

CONTACT PERSON: _____

E-MAIL ADDRESS: _____

AUTHORIZED SIGNATURE: _____

TITLE: _____

DATE: _____

EXHIBIT "C"

Insurance Requirements
Applicable to the Acquisition of Goods and /or Services
(other than Professional Services)

The Bidder awarded the contract shall furnish proof of insurance, which will also include any subcontractor that is subcontracted by the bidder in at least the following limits, to be in place prior to providing any services under this Contract and to continue at all times in force in effect during the term of this Contract:

1. A Five Hundred Thousand Dollar ($500,000.00) Comprehensive General Liability insurance policy providing additional coverage to all underlying liabilities of County.

2. Automobile liability insurance policy with limits of at least Three Hundred Thousand Dollars ($300,000.00) per person and Five Hundred Thousand Dollars ($500,000.00) per occurrence. Coverage should include injury to or death of persons and property damage claims with limits up to Five Hundred Thousand ($500,000.00) arising out of the services provided to County hereunder.

3. Uninsured/Underinsured motorist coverage in an amount equal to the bodily injury limits set forth immediately above;

4. Workers compensation insurance in amounts established by Texas law, unless the Bidder is specifically exempted from the Texas Workers Compensation Act, Texas Labor Code Chapter 401, et. seq.

Hidalgo County will only accept certificates of insurance on an Acord form (as attached hereto). Certificates of insurance shall name Hidalgo County as additional insured and must be submitted to County for approval prior to any services being performed by Contractor. Each policy of insurance required hereunder shall extend for a period equivalent to, or longer than the term of the Contract, and any insurer hereunder shall be required to give at least thirty (30) days written notice to the County prior to the cancellation of any such coverage on the termination date, or otherwise. This Contract shall be automatically suspended upon the cancellation, or other termination, of any required policy of insurance hereunder, and such suspension shall continue until evidence adequate replacement coverage is provided to County. If replacement coverage is not provided within thirty (30) days following suspension of the Contract, this Contract shall automatically terminate.

Revised 10/01/08

ACORD	CERTIFICATE OF INSURANCE	DATE (MM/DD/YY)

PRODUCER	THIS CERTIFICATE IS ISSUED AS A MATTER OF INFORMATION ONLY AND CONFERS NO RIGHTS UPON THE CERTIFICATE HOLDER. THIS CERTIFICATE DOES NOT AMEND, EXTEND OR ALTER THE COVERAGE AFFORDED BY THE POLICIES BELOW.
	INSURERS AFFORDING COVERAGE
INSURED	INSURER A:
	INSURER B:
	INSURER C:
	INSURER D:
	INSURER E:

COVERAGES

THE POLICIES OF INSURANCE LISTED BELOW HAVE BEEN ISSUED TO THE INSURED NAMED ABOVE FOR THE POLICY PERIOD INDICATED. NOTWITHSTANDING ANY REQUIREMENT, TERM OR CONDITION OF ANY CONTRACT OR OTHER DOCUMENT WITH RESPECT TO WHICH THIS CERTIFICATE MAY BE ISSUED OR MAY PERTAIN, THE INSURANCE AFFORDED BY THE POLICIES DESCRIBED HEREIN IS SUBJECT TO ALL THER TERMS, EXCLUSIONS AND CONDITIONS OF SUCH POLICIES. AGGREGATE LIMITS SHOWN MAY HAVE BEEN REDUCED BY PAID CLAIMS.

INSR LTR	TYPE OF INSURANCE	POLICY NUMBER	POLICY EFFECTIVE DATE (MM/DD/YY)	POLICY EXPIRATION DATE (MM/DD/YY)	LIMITS	
A	**GENERAL LIABILITY** ☐ COMMERCIAL GENERAL LIABILITY ☐ CLAIMS MADE ☐ OCCUR ☐ OWNER'S & CONT. PROT ☐ OWNER'S PROTECTIVE LIABILITY GEN'L AGGREGATE LIMIT APPLIES PER: ☐ POLICY ☐ PROJECT ☐ LOC				EACH OCCURRENCE	$
					FIRE DAMAGE (Any one fire)	$
					MED (Any one person)	$
					PER & ADV INJURY	$
					AL AGGREGATE	$
					PRODUCTS – COMP/OP AGG	$
B	**AUTOMOBILE LIABILITY** ☐ ANY AUTO ☐ ALL OWNED AUTOS ☐ SCHEDULED AUTOS ☐ HIRED AUTOS ☐ NON-OWNED AUTOS				COMBINED SINGLE LIMIT (Ea accident)	$
					BODILY INJURY (Per person)	$
					BODILY INJURY (Per accident)	$
					PROPERTY DAMAGE (Per accident)	$
	GARAGE LIABILITY ☐ ANY AUTO				AUTO ONLY-EA ACCIDENT	$
					OTHER THAN AUTO ONLY EA ACC	$
					AGG	$
C	**EXCESS LIABILITY** ☐ OCCUR ☐ CLAIMS MADE ☐ DEDUCTIBLE ☐ RETENTION $				EACH OCCURENCE	$
					AGGREGATE	$
						$
						$
						$
D	**WORKERS COMPENSATION AND EMPLOYER'S LIABILITY**				WC STATU- TORY LIMITS ☐ OTHER	
					E.L. EACH ACCIDENT	$
					E.L. DISEASE-EA EMPLOYEE	$
					E.L. DISEASE-POLICY LIMIT	$
	OTHER					

SAMPLE

DESCRIPTION OF OPERATIONS / LOCATION / VEHICLES / EXCLUSIONS ADDED BY ENDORSEMENT / SPECIAL PROVISIONS

County of Hidalgo shall be named as additional insured on all Commercial General Liability policies.

CERTIFICATE HOLDER	ADDITIONAL INSURED; INSURER LETTER: _____ CANCELLATION
Hidalgo County **Attn: Purchasing Department** **2812 S Highway Bus. 281** **Edinburg, Texas 78539**	SHOULD ANY OF THE ABOVE DESCRIBED POLICIES BY CANCELLED BEFORE THE EXPIRATION DATE THEREOF, THE ISSUING INSURER WILL ENDEAVOR TO MAIL ***30*** DAYS WRITTEN NOTICE TO THE CERTIFICATE HOLDER NAMED TO THE LEFT, BUT FAILURE TO DO SO SHALL IMPOSE NO OBLIGATION OR LIABILITY OF ANY KIND UPON THE INSURER, ITS AGENTS OR REPRESENTATIVES. AUTHORIZED REPRESENTATIVE

Insurance Requirement Acknowledgment

I, _____, authorized representative for _____,
Company/Vendor

hereby acknowledge receipt of the County's required insurance limits. Said requirements:

☐ will be acquired within 10 working days after notification from Purchasing Department of bid awarded by the Hidalgo County Commissioners' Court;

☐ will acquire additional amounts required to meet the County's requirements within 10 working days after notification from Purchasing Department of bid award by the Hidalgo County Commissioners' Court; currently carry the following:

Automobile Liability: $_____ General Liability: $_____

☐ have already been met, see attached copy of insurance certificate.

_____ _____.
Authorized Representative Date

Notice to Bidder:
A certificate of insurance for the required insurance limits shall be provided to the Purchasing Department's Contract Managers in order to qualify for award of bid and to execute a contract between your Company and the County

Failure to provide Certificates of Insurance to the Purchasing Department's Contract Managers will cause the bid award to be rescinded and re-awarded to next lowest bidder. Certificates of Insurance will be monitored and verified on a **quarterly basis** to ensure coverage policy is in place. It is the Company's obligation to maintain the appropriate insurance coverage throughout the term of the contract.

THIS FORM MUST ACCOMPANY BID PACKET

PROJECT REQUIREMENTS ACKNOWLEDGMENT

This is to certify that I, _____, possess all of the APPLICABLE:

1. Licenses: _____.
2. Bonds: _____.
3. Certificates: _____.
4. Permits: _____.
5. Other: _____.

necessary to carry out the required project. Furthermore, I am providing copies of the required documentation so that, if my company is awarded this bid, I may be eligible to enter into a contract with Hidalgo County and proceed to complete the project in a timely manner.

* Any licenses, bonds, certificates, permits, etc. which are required must be presented as part of the bid packet in order to expedite the bid evaluation process. Failure to provide said documentation will result in the disqualification of your bid.

_____ _____.
Authorized Signature Date

_____.
Company

_____.
Address

_____.
City, State, Zip

EXHIBIT "D"

CONFLICT OF INTEREST QUESTIONNAIRE — FORM CIQ

For vendor or other person doing business with local governmental entity

This questionnaire reflects changes made to the law by H.B. 1491, 80th Leg., Regular Session.

This questionnaire is being filed in accordance with Chapter 176, Local Government Code by a person who has a business relationship as defined by Section 176.001(1-a) with a local governmental entity and the person meets requirements under Section 176.006(a).

By law this questionnaire must be filed with the records administrator of the local governmental entity not later than the 7th business day after the date the person becomes aware of facts that require the statement to be filed. *See* Section 176.006, Local Government Code.

A person commits an offense if the person knowingly violates Section 176.006, Local Government Code. An offense under this section is a Class C misdemeanor.

OFFICE USE ONLY

Date Received

1 **Name of person who has a business relationship with local governmental entity.**

2 ☐ **Check this box if you are filing an update to a previously filed questionnaire.**

(The law requires that you file an updated completed questionnaire with the appropriate filing authority not later than the 7th business day after the date the originally filed questionnaire becomes incomplete or inaccurate.)

3 **Name of local government officer with whom filer has employment or business relationship.**

_____
Name of Officer

This section (item 3 including subparts A, B, C & D) must be completed for each officer with whom the filer has an employment or other business relationship as defined by Section 176.001(1-a), Local Government Code. Attach additional pages to this Form CIQ as necessary.

A. Is the local government officer named in this section receiving or likely to receive taxable income, other than investment income, from the filer of the questionnaire?

☐ Yes ☐ No

B. Is the filer of the questionnaire receiving or likely to receive taxable income, other than investment income, from or at the direction of the local government officer named in this section AND the taxable income is not received from the local governmental entity?

☐ Yes ☐ No

C. Is the filer of this questionnaire employed by a corporation or other business entity with respect to which the local government officer serves as an officer or director, or holds an ownership of 10 percent or more?

☐ Yes ☐ No

D. Describe each employment or business relationship with the local government officer named in this section.

4

_____ _____
Signature of person doing business with the governmental entity — Date

Adopted 06/29/2007

HIDALGO COUNTY
PURCHASING DEPARTMENT
Bidder/Vendor Application

Complete in print or type. Please return this application to the Hidalgo County Purchasing Department
thru Facsimile: (956) 318-2629 or (956) 292-7612
in person or regular mail to:
Mailing/Postal Address: 2812 S. Business Hwy. 281
Physical Address: 2802 S. Business Hwy. 281
Edinburg, Texas 78539
or e-mail: purchasing@co.hidalgo.tx.us

Company Name: Telephone No. ( )
dba Name:
Legal Name:
Mailing Address: Fax No. ( )
Physical Address:
City, State, Zip Tax I.D. No.
Remit to Address : City, State, Zip
E-Mail Address:
Representative(s) Name(s) & Title(s)
Type of Organization (check one): _____ Individual _____ Partnership _____ Corporation _____Non-Profit _____ LLC _____ Sole Proprietor _____ Other, Specify State Identification No._____ (Please attached completed W-9 form with this application) Federal Identification No. or (if individual) SS No.
State of Incorporation: _____ Date:_____ Other:
Type of Business (check one): _____ Manufacturer _____ Wholesaler _____ Retailer _____ Broker _____ Distributor _____ Service Organization _____ Other, Specify
Name & Title of Person(s) Authorized to Sign Bids, Proposals, and/or Contracts:
Small and/or Disadvantaged Business Information (check application criteria) Small Business: Disadvantaged Business (At Least 51% Ownership) ☐ Less than 125,000 annual gross receipt ☐ Black American ☐ Native American ☐ Less than 250,000 annual gross receipt ☐ Hispanic American ☐ Women ☐ Less than 499,000 annual gross receipt ☐ Asian Pacific American ☐ Other ☐ More than 500,000 annual gross receipt Have you been certified as a HUB or an MBE/WBE source?: ☐ Yes ☐ No Indicate Certification No.(s):_____ or are Certificate(s) attached?: ☐ Yes ☐ No
What type of product(s) is/are solicited by your company?: Would you like to be provided with specifications for procurements of such products?: ☐ Yes ☐ No

To Be Completed by the County: Rec'd by (Purchasing):_____ Date Rec'd by (Purchasing): Date Forwarded Information to Auditor's Office:_____Entry Date: _____ Vendor No.:

Revised12/14/06

HISTORICALLY UNDERUTILIZED BUSINESS (HUB) DECLARATION

The primary objective of the Hidalgo County HUB Program is to ensure Historically Underutilized Businesses receive a fair and equal opportunity for participation in the County's procurement process. This fact holds true for Services (Professional & Non-Professional), Commodities, and Construction contracts and any subcontracts thereto. The program strongly encourages Prime Contractors to provide subcontracting opportunities to Certified Hub Contractors/Vendors. Our goal for HUB contractor/vendor participation, as well as HUB subcontractor participation is 30%. To be considered as a "Certified HUB Contractor/Vendor" the contractor/vendor must have been certified by, and hold a current and valid certification with any of the three agencies listed below.

Have you been Certified as a HUB or an MBE/WBE source? ☐Yes ☐ No

If yes, by whom? ☐ Texas Building & Procurement Commission ☐ Other_____

Indicate Certification No(s).:_____ or Are Certificate(s) Attached?: ☐ Yes ☐ No

---

LIST OF CERTIFIED HUB SUBCONTRACTORS

(Attach additional pages if necessary)

What percentage of the Bid, RFP, or RFQ is to be subcontracted with Certified HUB sources? _____% (List HUB Subcontractor information below).

HUB Subcontractor Name: _____ HUB Status:

Certifying Agency (Check all applicable): ☐Texas Building & Procurement Commission ☐ other

Address: _____ City: _____ State: _____ Zip:

Contact Person: _____ Title: _____ Phone No.: ( )

Subcontract Amount: $_____ Description of Work to be Performed:

HUB Subcontractor Name: _____ HUB Status:

Certifying Agency (Check all applicable): ☐Texas Building & Procurement Commission ☐ other

Address: _____ City: _____ State: _____ Zip:

Contact Person: _____ Title: _____ Phone No.: ( )

Subcontract Amount: $_____ Description of Work to be Performed:

HUB Subcontractor Name: _____ HUB Status:

Certifying Agency (Check all applicable): ☐Texas Building & Procurement Commission ☐ other

Address: _____ City: _____ State: _____ Zip:

Contact Person: _____ Title: _____ Phone No.: ( )

Subcontract Amount: $_____ Description of Work to be Performed:

Form **W-9**
(Rev. August 2013)
Department of the Treasury
Internal Revenue Service

Request for Taxpayer Identification Number and Certification

Give Form to the requester. Do not send to the IRS.

Print or type
See Specific Instructions on page 2.

Name (as shown on your income tax return)

Business name/disregarded entity name, if different from above

Check appropriate box for federal tax classification:
☐ Individual/sole proprietor ☐ C Corporation ☐ S Corporation ☐ Partnership ☐ Trust/estate

☐ Limited liability company. Enter the tax classification (C=C corporation, S=S corporation, P=partnership) ▶ _____

☐ Other (see instructions) ▶

Exemptions (see instructions):
Exempt payee code (if any) _____
Exemption from FATCA reporting code (if any) _____

Address (number, street, and apt. or suite no.)

Requester's name and address (optional)

City, state, and ZIP code

List account number(s) here (optional)

Part I Taxpayer Identification Number (TIN)

Enter your TIN in the appropriate box. The TIN provided must match the name given on the "Name" line to avoid backup withholding. For individuals, this is your social security number (SSN). However, for a resident alien, sole proprietor, or disregarded entity, see the Part I instructions on page 3. For other entities, it is your employer identification number (EIN). If you do not have a number, see *How to get a TIN* on page 3.

Note. If the account is in more than one name, see the chart on page 4 for guidelines on whose number to enter.

Social security number
[ ][ ][ ] – [ ][ ] – [ ][ ][ ][ ]

Employer identification number
[ ][ ] – [ ][ ][ ][ ][ ][ ][ ]

Part II Certification

Under penalties of perjury, I certify that:

1. The number shown on this form is my correct taxpayer identification number (or I am waiting for a number to be issued to me), and
2. I am not subject to backup withholding because: (a) I am exempt from backup withholding, or (b) I have not been notified by the Internal Revenue Service (IRS) that I am subject to backup withholding as a result of a failure to report all interest or dividends, or (c) the IRS has notified me that I am no longer subject to backup withholding, and
3. I am a U.S. citizen or other U.S. person (defined below), and
4. The FATCA code(s) entered on this form (if any) indicating that I am exempt from FATCA reporting is correct.

Certification instructions. You must cross out item 2 above if you have been notified by the IRS that you are currently subject to backup withholding because you have failed to report all interest and dividends on your tax return. For real estate transactions, item 2 does not apply. For mortgage interest paid, acquisition or abandonment of secured property, cancellation of debt, contributions to an individual retirement arrangement (IRA), and generally, payments other than interest and dividends, you are not required to sign the certification, but you must provide your correct TIN. See the instructions on page 3.

Sign Here Signature of U.S. person ▶ Date ▶

General Instructions

Section references are to the Internal Revenue Code unless otherwise noted.

Future developments. The IRS has created a page on IRS.gov for information about Form W-9, at *www.irs.gov/w9*. Information about any future developments affecting Form W-9 (such as legislation enacted after we release it) will be posted on that page.

Purpose of Form

A person who is required to file an information return with the IRS must obtain your correct taxpayer identification number (TIN) to report, for example, income paid to you, payments made to you in settlement of payment card and third party network transactions, real estate transactions, mortgage interest you paid, acquisition or abandonment of secured property, cancellation of debt, or contributions you made to an IRA.

Use Form W-9 only if you are a U.S. person (including a resident alien), to provide your correct TIN to the person requesting it (the requester) and, when applicable, to:

1. Certify that the TIN you are giving is correct (or you are waiting for a number to be issued),
2. Certify that you are not subject to backup withholding, or
3. Claim exemption from backup withholding if you are a U.S. exempt payee. If applicable, you are also certifying that as a U.S. person, your allocable share of any partnership income from a U.S. trade or business is not subject to the withholding tax on foreign partners' share of effectively connected income, and
4. Certify that FATCA code(s) entered on this form (if any) indicating that you are exempt from the FATCA reporting, is correct.

Note. If you are a U.S. person and a requester gives you a form other than Form W-9 to request your TIN, you must use the requester's form if it is substantially similar to this Form W-9.

Definition of a U.S. person. For federal tax purposes, you are considered a U.S. person if you are:

- An individual who is a U.S. citizen or U.S. resident alien,
- A partnership, corporation, company, or association created or organized in the United States or under the laws of the United States,
- An estate (other than a foreign estate), or
- A domestic trust (as defined in Regulations section 301.7701-7).

Special rules for partnerships. Partnerships that conduct a trade or business in the United States are generally required to pay a withholding tax under section 1446 on any foreign partners' share of effectively connected taxable income from such business. Further, in certain cases where a Form W-9 has not been received, the rules under section 1446 require a partnership to presume that a partner is a foreign person, and pay the section 1446 withholding tax. Therefore, if you are a U.S. person that is a partner in a partnership conducting a trade or business in the United States, provide Form W-9 to the partnership to establish your U.S. status and avoid section 1446 withholding on your share of partnership income.

In the cases below, the following person must give Form W-9 to the partnership for purposes of establishing its U.S. status and avoiding withholding on its allocable share of net income from the partnership conducting a trade or business in the United States:

- In the case of a disregarded entity with a U.S. owner, the U.S. owner of the disregarded entity and not the entity,
- In the case of a grantor trust with a U.S. grantor or other U.S. owner, generally, the U.S. grantor or other U.S. owner of the grantor trust and not the trust, and
- In the case of a U.S. trust (other than a grantor trust), the U.S. trust (other than a grantor trust) and not the beneficiaries of the trust.

Foreign person. If you are a foreign person or the U.S. branch of a foreign bank that has elected to be treated as a U.S. person, do not use Form W-9. Instead, use the appropriate Form W-8 or Form 8233 (see Publication 515, Withholding of Tax on Nonresident Aliens and Foreign Entities).

Nonresident alien who becomes a resident alien. Generally, only a nonresident alien individual may use the terms of a tax treaty to reduce or eliminate U.S. tax on certain types of income. However, most tax treaties contain a provision known as a "saving clause." Exceptions specified in the saving clause may permit an exemption from tax to continue for certain types of income even after the payee has otherwise become a U.S. resident alien for tax purposes.

If you are a U.S. resident alien who is relying on an exception contained in the saving clause of a tax treaty to claim an exemption from U.S. tax on certain types of income, you must attach a statement to Form W-9 that specifies the following five items:

1. The treaty country. Generally, this must be the same treaty under which you claimed exemption from tax as a nonresident alien.

2. The treaty article addressing the income.

3. The article number (or location) in the tax treaty that contains the saving clause and its exceptions.

4. The type and amount of income that qualifies for the exemption from tax.

5. Sufficient facts to justify the exemption from tax under the terms of the treaty article.

Example. Article 20 of the U.S.-China income tax treaty allows an exemption from tax for scholarship income received by a Chinese student temporarily present in the United States. Under U.S. law, this student will become a resident alien for tax purposes if his or her stay in the United States exceeds 5 calendar years. However, paragraph 2 of the first Protocol to the U.S.-China treaty (dated April 30, 1984) allows the provisions of Article 20 to continue to apply even after the Chinese student becomes a resident alien of the United States. A Chinese student who qualifies for this exception (under paragraph 2 of the first protocol) and is relying on this exception to claim an exemption from tax on his or her scholarship or fellowship income would attach to Form W-9 a statement that includes the information described above to support that exemption.

If you are a nonresident alien or a foreign entity, give the requester the appropriate completed Form W-8 or Form 8233.

What is backup withholding? Persons making certain payments to you must under certain conditions withhold and pay to the IRS a percentage of such payments. This is called "backup withholding." Payments that may be subject to backup withholding include interest, tax-exempt interest, dividends, broker and barter exchange transactions, rents, royalties, nonemployee pay, payments made in settlement of payment card and third party network transactions, and certain payments from fishing boat operators. Real estate transactions are not subject to backup withholding.

You will not be subject to backup withholding on payments you receive if you give the requester your correct TIN, make the proper certifications, and report all your taxable interest and dividends on your tax return.

Payments you receive will be subject to backup withholding if:

1. You do not furnish your TIN to the requester,

2. You do not certify your TIN when required (see the Part II instructions on page 3 for details),

3. The IRS tells the requester that you furnished an incorrect TIN,

4. The IRS tells you that you are subject to backup withholding because you did not report all your interest and dividends on your tax return (for reportable interest and dividends only), or

5. You do not certify to the requester that you are not subject to backup withholding under 4 above (for reportable interest and dividend accounts opened after 1983 only).

Certain payees and payments are exempt from backup withholding. See *Exempt payee code* on page 3 and the separate Instructions for the Requester of Form W-9 for more information.

Also see *Special rules for partnerships* on page 1.

What is FATCA reporting? The Foreign Account Tax Compliance Act (FATCA) requires a participating foreign financial institution to report all United States account holders that are specified United States persons. Certain payees are exempt from FATCA reporting. See *Exemption from FATCA reporting code* on page 3 and the Instructions for the Requester of Form W-9 for more information.

Updating Your Information

You must provide updated information to any person to whom you claimed to be an exempt payee if you are no longer an exempt payee and anticipate receiving reportable payments in the future from this person. For example, you may need to provide updated information if you are a C corporation that elects to be an S corporation, or if you no longer are tax exempt. In addition, you must furnish a new Form W-9 if the name or TIN changes for the account, for example, if the grantor of a grantor trust dies.

Penalties

Failure to furnish TIN. If you fail to furnish your correct TIN to a requester, you are subject to a penalty of $50 for each such failure unless your failure is due to reasonable cause and not to willful neglect.

Civil penalty for false information with respect to withholding. If you make a false statement with no reasonable basis that results in no backup withholding, you are subject to a $500 penalty.

Criminal penalty for falsifying information. Willfully falsifying certifications or affirmations may subject you to criminal penalties including fines and/or imprisonment.

Misuse of TINs. If the requester discloses or uses TINs in violation of federal law, the requester may be subject to civil and criminal penalties.

Specific Instructions

Name

If you are an individual, you must generally enter the name shown on your income tax return. However, if you have changed your last name, for instance, due to marriage without informing the Social Security Administration of the name change, enter your first name, the last name shown on your social security card, and your new last name.

If the account is in joint names, list first, and then circle, the name of the person or entity whose number you entered in Part I of the form.

Sole proprietor. Enter your individual name as shown on your income tax return on the "Name" line. You may enter your business, trade, or "doing business as (DBA)" name on the "Business name/disregarded entity name" line.

Partnership, C Corporation, or S Corporation. Enter the entity's name on the "Name" line and any business, trade, or "doing business as (DBA) name" on the "Business name/disregarded entity name" line.

Disregarded entity. For U.S. federal tax purposes, an entity that is disregarded as an entity separate from its owner is treated as a "disregarded entity." See Regulation section 301.7701-2(c)(2)(iii). Enter the owner's name on the "Name" line. The name of the entity entered on the "Name" line should never be a disregarded entity. The name on the "Name" line must be the name shown on the income tax return on which the income should be reported. For example, if a foreign LLC that is treated as a disregarded entity for U.S. federal tax purposes has a single owner that is a U.S. person, the U.S. owner's name is required to be provided on the "Name" line. If the direct owner of the entity is also a disregarded entity, enter the first owner that is not disregarded for federal tax purposes. Enter the disregarded entity's name on the "Business name/disregarded entity name" line. If the owner of the disregarded entity is a foreign person, the owner must complete an appropriate Form W-8 instead of a Form W-9. This is the case even if the foreign person has a U.S. TIN.

Note. Check the appropriate box for the U.S. federal tax classification of the person whose name is entered on the "Name" line (Individual/sole proprietor, Partnership, C Corporation, S Corporation, Trust/estate).

Limited Liability Company (LLC). If the person identified on the "Name" line is an LLC, check the "Limited liability company" box only and enter the appropriate code for the U.S. federal tax classification in the space provided. If you are an LLC that is treated as a partnership for U.S. federal tax purposes, enter "P" for partnership. If you are an LLC that has filed a Form 8832 or a Form 2553 to be taxed as a corporation, enter "C" for C corporation or "S" for S corporation, as appropriate. If you are an LLC that is disregarded as an entity separate from its owner under Regulation section 301.7701-3 (except for employment and excise tax), do not check the LLC box unless the owner of the LLC (required to be identified on the "Name" line) is another LLC that is not disregarded for U.S. federal tax purposes. If the LLC is disregarded as an entity separate from its owner, enter the appropriate tax classification of the owner identified on the "Name" line.

Other entities. Enter your business name as shown on required U.S. federal tax documents on the "Name" line. This name should match the name shown on the charter or other legal document creating the entity. You may enter any business, trade, or DBA name on the "Business name/disregarded entity name" line.

Exemptions

If you are exempt from backup withholding and/or FATCA reporting, enter in the *Exemptions* box, any code(s) that may apply to you. See *Exempt payee code* and *Exemption from FATCA reporting code* on page 3.

Exempt payee code. Generally, individuals (including sole proprietors) are not exempt from backup withholding. Corporations are exempt from backup withholding for certain payments, such as interest and dividends. Corporations are not exempt from backup withholding for payments made in settlement of payment card or third party network transactions.

Note. If you are exempt from backup withholding, you should still complete this form to avoid possible erroneous backup withholding.

The following codes identify payees that are exempt from backup withholding:

1—An organization exempt from tax under section 501(a), any IRA, or a custodial account under section 403(b)(7) if the account satisfies the requirements of section 401(f)(2)

2—The United States or any of its agencies or instrumentalities

3—A state, the District of Columbia, a possession of the United States, or any of their political subdivisions or instrumentalities

4—A foreign government or any of its political subdivisions, agencies, or instrumentalities

5—A corporation

6—A dealer in securities or commodities required to register in the United States, the District of Columbia, or a possession of the United States

7—A futures commission merchant registered with the Commodity Futures Trading Commission

8—A real estate investment trust

9—An entity registered at all times during the tax year under the Investment Company Act of 1940

10—A common trust fund operated by a bank under section 584(a)

11—A financial institution

12—A middleman known in the investment community as a nominee or custodian

13—A trust exempt from tax under section 664 or described in section 4947

The following chart shows types of payments that may be exempt from backup withholding. The chart applies to the exempt payees listed above, 1 through 13.

IF the payment is for . . .	THEN the payment is exempt for . . .
Interest and dividend payments	All exempt payees except for 7
Broker transactions	Exempt payees 1 through 4 and 6 through 11 and all C corporations. S corporations must not enter an exempt payee code because they are exempt only for sales of noncovered securities acquired prior to 2012.
Barter exchange transactions and patronage dividends	Exempt payees 1 through 4
Payments over $600 required to be reported and direct sales over $5,000[1]	Generally, exempt payees 1 through 5[2]
Payments made in settlement of payment card or third party network transactions	Exempt payees 1 through 4

[1] See Form 1099-MISC, Miscellaneous Income, and its instructions.

[2] However, the following payments made to a corporation and reportable on Form 1099-MISC are not exempt from backup withholding: medical and health care payments, attorneys' fees, gross proceeds paid to an attorney, and payments for services paid by a federal executive agency.

Exemption from FATCA reporting code. The following codes identify payees that are exempt from reporting under FATCA. These codes apply to persons submitting this form for accounts maintained outside of the United States by certain foreign financial institutions. Therefore, if you are only submitting this form for an account you hold in the United States, you may leave this field blank. Consult with the person requesting this form if you are uncertain if the financial institution is subject to these requirements.

A—An organization exempt from tax under section 501(a) or any individual retirement plan as defined in section 7701(a)(37)

B—The United States or any of its agencies or instrumentalities

C—A state, the District of Columbia, a possession of the United States, or any of their political subdivisions or instrumentalities

D—A corporation the stock of which is regularly traded on one or more established securities markets, as described in Reg. section 1.1472-1(c)(1)(i)

E—A corporation that is a member of the same expanded affiliated group as a corporation described in Reg. section 1.1472-1(c)(1)(i)

F—A dealer in securities, commodities, or derivative financial instruments (including notional principal contracts, futures, forwards, and options) that is registered as such under the laws of the United States or any state

G—A real estate investment trust

H—A regulated investment company as defined in section 851 or an entity registered at all times during the tax year under the Investment Company Act of 1940

I—A common trust fund as defined in section 584(a)

J—A bank as defined in section 581

K—A broker

L—A trust exempt from tax under section 664 or described in section 4947(a)(1)

M—A tax exempt trust under a section 403(b) plan or section 457(g) plan

Part I. Taxpayer Identification Number (TIN)

Enter your TIN in the appropriate box. If you are a resident alien and you do not have and are not eligible to get an SSN, your TIN is your IRS individual taxpayer identification number (ITIN). Enter it in the social security number box. If you do not have an ITIN, see *How to get a TIN* below.

If you are a sole proprietor and you have an EIN, you may enter either your SSN or EIN. However, the IRS prefers that you use your SSN.

If you are a single-member LLC that is disregarded as an entity separate from its owner (see *Limited Liability Company (LLC)* on page 2), enter the owner's SSN (or EIN, if the owner has one). Do not enter the disregarded entity's EIN. If the LLC is classified as a corporation or partnership, enter the entity's EIN.

Note. See the chart on page 4 for further clarification of name and TIN combinations.

How to get a TIN. If you do not have a TIN, apply for one immediately. To apply for an SSN, get Form SS-5, Application for a Social Security Card, from your local Social Security Administration office or get this form online at *www.ssa.gov*. You may also get this form by calling 1-800-772-1213. Use Form W-7, Application for IRS Individual Taxpayer Identification Number, to apply for an ITIN, or Form SS-4, Application for Employer Identification Number, to apply for an EIN. You can apply for an EIN online by accessing the IRS website at *www.irs.gov/businesses* and clicking on Employer Identification Number (EIN) under Starting a Business. You can get Forms W-7 and SS-4 from the IRS by visiting IRS.gov or by calling 1-800-TAX-FORM (1-800-829-3676).

If you are asked to complete Form W-9 but do not have a TIN, apply for a TIN and write "Applied For" in the space for the TIN, sign and date the form, and give it to the requester. For interest and dividend payments, and certain payments made with respect to readily tradable instruments, generally you will have 60 days to get a TIN and give it to the requester before you are subject to backup withholding on payments. The 60-day rule does not apply to other types of payments. You will be subject to backup withholding on all such payments until you provide your TIN to the requester.

Note. Entering "Applied For" means that you have already applied for a TIN or that you intend to apply for one soon.

Caution: *A disregarded U.S. entity that has a foreign owner must use the appropriate Form W-8.*

Part II. Certification

To establish to the withholding agent that you are a U.S. person, or resident alien, sign Form W-9. You may be requested to sign by the withholding agent even if items 1, 4, or 5 below indicate otherwise.

For a joint account, only the person whose TIN is shown in Part I should sign (when required). In the case of a disregarded entity, the person identified on the "Name" line must sign. Exempt payees, see *Exempt payee code* earlier.

Signature requirements. Complete the certification as indicated in items 1 through 5 below.

1. Interest, dividend, and barter exchange accounts opened before 1984 and broker accounts considered active during 1983. You must give your correct TIN, but you do not have to sign the certification.

2. Interest, dividend, broker, and barter exchange accounts opened after 1983 and broker accounts considered inactive during 1983. You must sign the certification or backup withholding will apply. If you are subject to backup withholding and you are merely providing your correct TIN to the requester, you must cross out item 2 in the certification before signing the form.

3. Real estate transactions. You must sign the certification. You may cross out item 2 of the certification.

4. Other payments. You must give your correct TIN, but you do not have to sign the certification unless you have been notified that you have previously given an incorrect TIN. "Other payments" include payments made in the course of the requester's trade or business for rents, royalties, goods (other than bills for merchandise), medical and health care services (including payments to corporations), payments to a nonemployee for services, payments made in settlement of payment card and third party network transactions, payments to certain fishing boat crew members and fishermen, and gross proceeds paid to attorneys (including payments to corporations).

5. Mortgage interest paid by you, acquisition or abandonment of secured property, cancellation of debt, qualified tuition program payments (under section 529), IRA, Coverdell ESA, Archer MSA or HSA contributions or distributions, and pension distributions. You must give your correct TIN, but you do not have to sign the certification.

What Name and Number To Give the Requester

For this type of account:	Give name and SSN of:
1. Individual	The individual
2. Two or more individuals (joint account)	The actual owner of the account or, if combined funds, the first individual on the account [1]
3. Custodian account of a minor (Uniform Gift to Minors Act)	The minor [2]
4. a. The usual revocable savings trust (grantor is also trustee)	The grantor-trustee [1]
b. So-called trust account that is not a legal or valid trust under state law	The actual owner [1]
5. Sole proprietorship or disregarded entity owned by an individual	The owner [3]
6. Grantor trust filing under Optional Form 1099 Filing Method 1 (see Regulation section 1.671-4(b)(2)(i)(A))	The grantor*
For this type of account:	**Give name and EIN of:**
7. Disregarded entity not owned by an individual	The owner
8. A valid trust, estate, or pension trust	Legal entity [4]
9. Corporation or LLC electing corporate status on Form 8832 or Form 2553	The corporation
10. Association, club, religious, charitable, educational, or other tax-exempt organization	The organization
11. Partnership or multi-member LLC	The partnership
12. A broker or registered nominee	The broker or nominee
13. Account with the Department of Agriculture in the name of a public entity (such as a state or local government, school district, or prison) that receives agricultural program payments	The public entity
14. Grantor trust filing under the Form 1041 Filing Method or the Optional Form 1099 Filing Method 2 (see Regulation section 1.671-4(b)(2)(i)(B))	The trust

[1] List first and circle the name of the person whose number you furnish. If only one person on a joint account has an SSN, that person's number must be furnished.

[2] Circle the minor's name and furnish the minor's SSN.

[3] You must show your individual name and you may also enter your business or "DBA" name on the "Business name/disregarded entity" name line. You may use either your SSN or EIN (if you have one), but the IRS encourages you to use your SSN.

[4] List first and circle the name of the trust, estate, or pension trust. (Do not furnish the TIN of the personal representative or trustee unless the legal entity itself is not designated in the account title.) Also see *Special rules for partnerships* on page 1.

*Note. Grantor also must provide a Form W-9 to trustee of trust.

Note. If no name is circled when more than one name is listed, the number will be considered to be that of the first name listed.

Secure Your Tax Records from Identity Theft

Identity theft occurs when someone uses your personal information such as your name, social security number (SSN), or other identifying information, without your permission, to commit fraud or other crimes. An identity thief may use your SSN to get a job or may file a tax return using your SSN to receive a refund.

To reduce your risk:

- Protect your SSN,
- Ensure your employer is protecting your SSN, and
- Be careful when choosing a tax preparer.

If your tax records are affected by identity theft and you receive a notice from the IRS, respond right away to the name and phone number printed on the IRS notice or letter.

If your tax records are not currently affected by identity theft but you think you are at risk due to a lost or stolen purse or wallet, questionable credit card activity or credit report, contact the IRS Identity Theft Hotline at 1-800-908-4490 or submit Form 14039.

For more information, see Publication 4535, Identity Theft Prevention and Victim Assistance.

Victims of identity theft who are experiencing economic harm or a system problem, or are seeking help in resolving tax problems that have not been resolved through normal channels, may be eligible for Taxpayer Advocate Service (TAS) assistance. You can reach TAS by calling the TAS toll-free case intake line at 1-877-777-4778 or TTY/TDD 1-800-829-4059.

Protect yourself from suspicious emails or phishing schemes. Phishing is the creation and use of email and websites designed to mimic legitimate business emails and websites. The most common act is sending an email to a user falsely claiming to be an established legitimate enterprise in an attempt to scam the user into surrendering private information that will be used for identity theft.

The IRS does not initiate contacts with taxpayers via emails. Also, the IRS does not request personal detailed information through email or ask taxpayers for the PIN numbers, passwords, or similar secret access information for their credit card, bank, or other financial accounts.

If you receive an unsolicited email claiming to be from the IRS, forward this message to *phishing@irs.gov*. You may also report misuse of the IRS name, logo, or other IRS property to the Treasury Inspector General for Tax Administration at 1-800-366-4484. You can forward suspicious emails to the Federal Trade Commission at: *spam@uce.gov* or contact them at *www.ftc.gov/idtheft* or 1-877-IDTHEFT (1-877-438-4338).

Visit IRS.gov to learn more about identity theft and how to reduce your risk.

Privacy Act Notice

Section 6109 of the Internal Revenue Code requires you to provide your correct TIN to persons (including federal agencies) who are required to file information returns with the IRS to report interest, dividends, or certain other income paid to you; mortgage interest you paid; the acquisition or abandonment of secured property; the cancellation of debt; or contributions you made to an IRA, Archer MSA, or HSA. The person collecting this form uses the information on the form to file information returns with the IRS, reporting the above information. Routine uses of this information include giving it to the Department of Justice for civil and criminal litigation and to cities, states, the District of Columbia, and U.S. commonwealths and possessions for use in administering their laws. The information also may be disclosed to other countries under a treaty, to federal and state agencies to enforce civil and criminal laws, or to federal law enforcement and intelligence agencies to combat terrorism. You must provide your TIN whether or not you are required to file a tax return. Under section 3406, payers must generally withhold a percentage of taxable interest, dividend, and certain other payments to a payee who does not give a TIN to the payer. Certain penalties may also apply for providing false or fraudulent information.

Certification
Regarding Debarment, Suspension and Ineligibility

As is required by the Federal Regulations Implementing Executive Order 12549, Debarment and Suspension, 45 CFR Part 76, Government-wide Debarment and Suspension, the applicant certifies, to the best of his or her knowledge and belief, that both it and its principals:

a. Are not presently debarred, suspended, proposed for debarment, declared ineligible, or voluntarily excluded from participation in this transaction by any federal department or agency;

b. Have not within a three-year period preceding this bid proposal and/or application been convicted of or had a civil judgment rendered against them for commission of fraud or a criminal offense in connection with obtaining, attempting to obtain, or performing a public (federal, state, or local) transaction or contract under a public transaction, violation of federal or state antitrust statutes or commission of embezzlement, theft, forgery, bribery, falsification or destruction of records, making false statements, or receiving stolen property;

c. Are not presently indicated for or otherwise criminally or civilly charged by a government entity with commission of any of the offenses enumerated herein; and

d. Have not within a three-year period preceding this bid proposal and/or application had one or more public transactions terminated for cause or default.

Signature:_____
Print Name:_____
Title:_____
Telephone Number:_____
Date:_____

If the bidder is unable to verify to all of the statements in this Certification, such bidder should attach an explanation to this proposal.

THE STATE OF TEXAS §
§
COUNTY OF HIDALGO §

SERVICE CONTRACT
C-

THIS CONTRACT is made and entered into this _____ Day of_____, **2015** by and between the **COUNTY OF HIDALGO, TEXAS** ("County"), and _____("Company").

WHEREAS, Company responded to advertised notices for bids for **"GENERAL PRINTING SERVICES AND RELATED SUPPLIES"** the ("Services"); and

WHEREAS, Company submitted a bid to provide services in accordance with the specifications as bid, a copy of such specifications and bid being attached hereto as Exhibits "A" and "B" ("Vendor's Bid") respectively, and incorporated herein for all purposes (the "RFB Packet"); and

WHEREAS, in recognition of and in consideration of Company's agreement to perform the Services in accordance with Specifications, the Commissioners Court of County awarded the bid to Company.

NOW, THEREFORE, in mutual consideration of the foregoing and the further consideration of the following, the parties hereto agree as follows:

1. County and Company hereby agree that this Contract is entered into in order to provide the Services to locations at **Hidalgo County**. This Contract does not extend to any third parties any duties or benefits conferred in any manner hereunder or otherwise.

2. Company hereby promises and agrees to render and provide, during the term of this Contract, and shall be obligated to render and provide the Services in

DRAFT

accordance with the Specifications within **Hidalgo County** following a request for Services by the **Commissioners' Court** or their designated agent. Company agrees in performing the Services that it will use proper professional standards, comply with any and all appropriate laws and regulations in providing the Services, and devote such time as is necessary to safely and efficiently provide the Services.

3. This Contract shall be for a period of one year effective _____, **2015** and ending on _____**2016.** Hidalgo County at its sole discretion elect the option to extend the contract for two (2) - one (1) year at the same rates, terms and conditions **and** may further extend an additional sixty (60) days grace period at the end of the contract term due to any unforeseen delay in the procurement process, unless this Contract is terminated pursuant to the provisions herein, whichever occurs first.

4. As a condition of this Contract, Company shall hold and maintain throughout the term of this Contract all licenses and permits required, or which may be required by any authority during the term hereof to provide the Services.

5. All trucks or vehicles operated by the Company to perform the Services shall contain all equipment required by any authority to operate on streets and roads and all persons in the employ of Company who operate such trucks or vehicles shall have the required licenses, qualifications, skill and expertise to perform such Services and shall comply with all laws, rules and regulations prescribed by any agency or authority having jurisdiction with regard to the operation of such trucks or vehicles in providing the Services.

6. As consideration for rendering the Service provided for in this Contract, the County agrees to pay Company the amounts specified in Exhibit "B" attached hereto payable against written invoice submitted by Company.

DRAFT

7. Company shall provide insurance in force on all its vehicles and all persons connected with providing services under this Contract naming County as an additional insured (with the coverages and in the amounts described on Exhibit "C" attached hereto and incorporated herein at this point for all purposes), and shall furnish to County certificates of such insurance coverage.

8. Company shall provide a sufficient number of trucks, vehicles, personnel and equipment available to safely and efficiently provide the Services.

9. Company shall indemnify and hold harmless County, its elected officials, employees and agents from any and all claims, damages, losses, and expenses including attorney's fees for the defense of any action against County arising out of, resulting from, or connected with the provision of the Service by Company under this Contract. Said indemnity shall cover any act or failure to act by the Company, its agents or employees.

10. This Contract shall not be assignable in whole or in part by either party without prior written consent of the other party.

11. It is expressly agreed that this Contract and the performance by the parties hereunder does not create any agency relationship or master-servant relationship, that County has no supervision of the performance of the Services provided by Company, and that Company is an independent contractor under this Contract.

12. Any notice required or permitted to be given hereunder shall be in writing and shall be delivered personally or sent by certified mail, postage prepaid, as set forth below:

DRAFT

If to County: **The County of Hidalgo**
Attn: County Judge
1615 South Closner, Suite J
Edinburg, Texas 78539

If to Company _____
_____
_____

13. In case any one or more of the provisions contained in this Agreement shall for any reason be held to be invalid, illegal or unenforceable in any respect, such invalidity, illegality, or unenforceability shall not affect any other provision thereof and this Agreement shall be construed as if such invalid, illegal, or unenforceable provision had never been contained herein.

14. Any contract award to a successful bidder will be in effect until (a) the contract expires, (b) delivery and acceptance of products, and/or performance of services ordered, or (c) terminated without cause by County with thirty day's written notice prior to cancellation.

15. The contract may be terminated without cause upon thirty (30) days written notice by County.

16. This Agreement shall be binding upon and inure to the benefit of and be enforceable by the parties hereto and their respective heirs, executors, administrators, legal representatives, successors, and assigns where permitted by this Agreement.

DRAFT

17. This Agreement shall be governed by and construed in accordance with the laws of the State of Texas and shall be performable in Hidalgo County.

WITNESS our hands in duplicate originals this_____ day of _____, 2015.

COUNTY OF HIDALGO

ATTEST:

By:_____
Ramon Garcia, County Judge

_____

Arturo Guajardo Jr., County Clerk

COMPANY:_____

By:_____

Printed Name:_____

Title:_____

APPROVED BY COMMISSIONES COURT:_____

APPROVED AS TO FORM:
Atlas & Hall, L.L.P.

By:_____
Stephen L. Crain

DRAFT

EXHIBIT "A"
REQUEST FOR BIDS (RFB)
PROCURMENT PACKET

DRAFT

EXHIBIT "B"
VENDOR'S BID

DRAFT

EXHIBIT "C"
INSURANCE REQUIREMENTS

DRAFT

EXHIBIT "B"
VENDOR'S BID

EXHIBIT "B" *(Revised)*

BID PAGE

HIDALGO COUNTY

"General Printing Services & Related Supplies"

BID NO: 2015-029-05-06-SMA

OPENED 5/6/15 9am Witnessed

METHOD OF DELIVERY:

F.O.B. INSIDE DELIVERY GULF DATA PRODUCTS **THIRD PARTY DELIVERY** _____

A) 92ND JUDICIAL DISTRICT COURT

	DESCRIPTION		Estimated Qty	UNIT PRICE
1.	*BUSINESS CARDS*	3½"x2",80# linen card stock-natural Black(raised)Lettering, w/Gold raised Seal , Single sided print, landscape layout	500 per order	39.80 BX
2.	*ENVELOPES W/LOGO*	Size:9½ x4⅛",#10 linen-Natural Standard Envelopes, black ink (raised) Print and Gold (foil) seal 500 per box 24 lb	2 boxes of 500	123.00 BX
3.	*LETTERHEAD PAPER*	8.5"x11", #24 linen-natural, one sided print, black (raised) ink print , seal gold(foil), 500 sheets per ream 24 lb 25 % Cotton	1,000	.189 each
4.	*ORDER OF RELEASE/ ORDER OF COMMITMENT*	8.5"x11" Paper Size, three (3) part NCR, Paper sequence all three parts white paper, 1 page <u>only</u> front and back print, 2nd and 3rd page front only, Top Glue Bind	2,000/3 part	.179 ea

B) 139TH JUDICIAL DISTRICT COURT

	Description			Estimated Qty	UNIT PRICE
1.	*BUSINESS CARDS*	3½"x2", Black ink raised Lettering, w/gold raised seal, single sided print, landscape layout	foil seal	4 bxs. of 500	104.90 BX
			ink seal	4 bxs. of 500	35.80 BX
2.	*ENVELOPES W/LOGO*	Size 4 ⅛" x 9 ½", White Linen Standard Envelopes, raised Print, black ink and Gold ink foil seal		2 boxes of 500	123.00 BX
3.	*LETTERHEAD PAPER*	8.5" X 11", #20 White Linen Fine quality Bond Paper one sided print, flat black ink print , gold ink foil stamp seal		4 reams of 500	94.00 RM
4.	*ORDER OF RELEASE/ORDER OF COMMITMENT*	8.5" X 11" Paper Size, three (3) part NCR, Paper sequence all three parts white paper, 1 page <u>only</u> front and back print, 2nd and 3rd page front only Top Glue Bind		2,000/3 part	.179 ea

C) 206TH JUDICIAL DISTRICT COURT

	Description		Estimated Qty	UNIT PRICE
1.	*BUSINESS CARDS*	3½" X 2", Black ink Raised Lettering, w/Gold Raised Seal , Single sided print, landscape layout white Linen	1,000	.044 ea
2.	*COURT ORDER MODIFYING CONDITIONS OF BOND*	8½" X 11" Page Size, 3 Part NCR, Black Ink Printing, Paper Color Sequence: White, Canary Yellow	1,000/3 part	.169 ea
3.	*ENVELOPES W/LOGO*	size 4 ⅛" x 9 ½", standard envelopes, raised print, black ink and gold for seal 24 lb 25 % cotton	2 boxes of 500	92.00 BX
4.	*JUROR TAGS*	3½" x 2", Black flat Print, Red Paper Stock, Laminated w/thumb grip clip	14	9.00 ea
5.	*JUROR'S HANDBOOK PAMPHLETS*	17 ½" X 9", Flat Print Black Ink – Double Sided, 4 fold pamphlet, Light Blue Paper 60 lb	1,000	.396 ea
6.	*LETTERHEAD PAPER*	25 % Cotton Paper8.5" X 11", #20 Fine quality Bond Paper, one sided print, raised black ink print , seal raised gold ink, 24 lb 25 % Cotton	2 reams of 500	69.00 RM
7.	*ORDER OF RELEASE/ORDER OF COMMITMENT*	8.5" X 11" Paper Size, three (3) part NCR, Paper sequence all three parts white paper, 1 page <u>only</u> front and back print, 2nd and 3rd page front only, Top Glue Bind	2,000/3 part	.179 ea

GDP

OPENED 5/9/15 10a Witnessed

D) 332nd JUDICIAL DISTRICT COURT

	Description		Estimated Qty	UNIT PRICE
1.	*BUSINESS CARDS*	3½" X 2", Black ink Raised Lettering, w/Gold Raised Seal , Single sided print, landscape layout	500	35.80 BX
2.	*ENVELOPES W/LOGO*	Size 4 ⅛" x 9 ½", Standard Envelopes flat black Print, and flat black ink for sea	2,500	.0596 ea
3.	*INSTRUCTIONS TO JURORS IN CIVIL CASES*	5 ½ x 7" folded in half printed in black front and back in and out of	2,500	.0456 ea
4.	*LETTERHEAD PAPER*	8.5" X 11" 25 % Cotton Paper- flat Print, black/gray ink	1,000	.139 ea
5.	*ORDER OF REFERRAL FOR MEDIATION:*	8.5" X 11" 25 % Cotton Paper- Printed in front page in Black only	2,000	.0795 ea
6.	*ORDER OF RELEASE/ORDER OF COMMITMENT*	8.5" X 11" Paper Size, three (3) part NCR, White, Yellow, Pink 1st page only front and back print, 2nd and 3rd page front print only------ 2 hole punch on top	2,500	.179 ea

E) 370th JUDICIAL DISTRICT COURT

	Description		Estimated Qty	UNIT PRICE
1.	*ENVELOPES W/LOGO*	Size 4 ⅛" x 9 ½", Standard Envelopes, raised Print, black ink and Gold for seal 500 per box	1,000 per order	.159 ea
2.	*LETTERHEAD PAPER*	8.5" X 11", #20 Fine quality Bond Paper one sided print, flat black ink print , gold ink foil seal, 500 sheets per ream 25 % cotton	1,000 per order	.129 ea

F) 398th JUDICIAL DISTRICT COURT

	Description		Estimated Qty	UNIT PRICE
1.	*BUSINESS CARDS*	3½" X 2", Ink -Black and Red Raised Lettering, w/Gold foil Seal , Single sided print, landscape layout	5 box of 500	109.00 BX
2.	*ENVELOPES W/LOGO*	Size 4 ⅛" x 9 ½", Standard Envelopes, Ink – Black and Red raised Print, black ink with Gold seal foil	6 boxes of 500	107.00 BX
3.	*LETTERHEAD*	8.5" X 11", #20 Fine quality Bond Paper, one sided print, raised black and red ink print , seal gold foil 25 % cotton (1st page	6 reams of 500	89.00 RM
4.	*ORDER OF RELEASE/ORDER OF COMMITMENT*	8.5" X 11" Paper Size, three (3) part NCR, Paper sequence all three parts white paper, 1 page only front and back print, 2nd and 3rd page front only (same as page one) Top Glue Bind	3,000 3-Part	.179 ea

G) 430th JUDICIAL DISTRICT COURT

	Description			Estimated Qty	UNIT PRICE
1.	*BUSINESS CARDS*	3½"x2", BLUE ink Raised Lettering, w/Gold Raised Seal, Single sided print, landscape layout	foil	500	104.90 BX
			ink	500	35.80 BX
2.	*BUSINESS CARDS, double sided print, landscape layout*	(BAILIFF) 3½"x2", BLUE ink Raised Lettering in the front w/Gold ink Seal, DOUBLE sided flat print in the back , landscape layout		500	49.00 BX
3.	*ENVELOPES W/LOGO*	Size 4 ⅛" x 9½", Standard Envelopes, Ink – Black and Red raised Print, black ink with Gold seal 25 % cotton		1000	.164 ea
4.	*JUROR'S HANDBOOK PAMPHLETS*	17½"x9", Flat Print Black Ink – Double Sided, 5 fold pamphlet, Light BLUE Paper		500	.68 ea
5.	*LETTERHEAD*	8.5"x11" Cotton Paper #20 Fine quality Bond Paper, one sided print, raised BLUE ink print , seal raised gold ink, 500 sheets per ream 25% cotton		1000	.127 ea
6.	*ORDER OF RELEASE/ORDER OF COMMITMENT*	8.5"x11" Paper Size, three (3) part NCR, Paper sequence all three parts white paper, 1 page only front and back print, 2nd and 3rd page front only (same as page one) Top Glue Bind		3,000 3-Part	.179 ea

H) ADULT PROBATION DEPARTMENT

	Description		Estimated Qty	UNIT PRICE
1.	*APPOINTMENT CARDS*	Letter Size Page 8½"x 11", black ink printing w/black ink logo, 6 cards per page, 110 lb. paper, double sided print cut into 8 cards	10,000 per year	.065 ea

GDP

2.	*ASSESSMENT APPOINTMENT FORM*	Letter size page 20lb. light yellow paper, cut in 2 parts-double sided print-black ink	6,000 per year	.049 ea
3.	*BUSINESS CARDS*	3½"x2", Black ink Raised Lettering, w/ Raised Gold Seal and lettering, Single sided print-500 per box, landscape layout	5,000 per year	35.80 BX
4.	*COMMUNITY SERVICE RESTITUTION (CSR) ID CARD*	Letter Size Page (8½"x11")Page Size, 110 lb. paper 4 cards per page, Black ink printing, double sided print, cut into 4 cards	6,000 per year	.076 ea
5.	*COURT INFORMATION FORM*	Letter Size Page (8½" X 11), 20 lb. Paper-double sided print, black ink printing	5,000 per year	.037 ea
6.	*COURT NOTES*	Letter Size Page (8½"x11), single sided print, black ink printing	4,000 per year	.036 ea
7.	*DELINQUENT LETTER for DEFENDANT*	Letter Size Page (8½"x11")-Black ink printing-Double sided print English/Spanish	15,000 per year	.028 ea
8.	*ENVELOPES W/LOGO*	#10 No Window Envelope. (4⅛"x9 ½"), Standard Envelopes, flat black print, w/ black flat print seal 500 per box, with no window	40,000 per year	17.00 BX
9.	*ENVELOPES W/LOGO*	Size (4⅛" x 9 ½"), Standard Envelopes, flat black print, w/ black flat print seal 500 per box, with window,	20,000 per year	19.00 BX
10.	*ENVELOPES W/LOGO*	Custom Size (3⅝"x8⅝") Special Window (3" across by 1 down) Black ink Inside Blue Tint	30,000 per year	.099 ea
11.	*FAMILY HISTORY INFORMATION*	Letter Size Paper (8½" X 11") 20 lb, double sided-Flat Black ink print, English/Spanish	6,000 per year	.0315 ea
12.	*HOME VISIT CARDS*	Letter Size Page (8½" x11"), Double sided print, black ink flat print, 110 lb. paper, 6 cards per page, cut into 6 cards-English/Spanish	10,000 per year	.077 ea
13.	*INTAKE APPT. REFERRAL*	Letter Size Page (8½" x11"), Double sided print, black ink flat print- light green 20 lb	8,000 per year	.03 ea
14.	*MONTHLY REPORT (by mail)*	Letter Size Page(8½" x11"), Double sided print, black ink printing English/Spanish	6,000 per year	.0315 ea
15.	*PAMPHLETS*	Letter Size Page (8½" x11"), Tri Fold-Glossy 32 lb paper, Double sided flat multi color print, Premium Presentation Paper	20,000 per year	.087 ea
16.	*RECEPTIONISTS SLIPS*	Letter Size page (8½"x11"), 20lb White Paper, Black flat print, cut in 8 parts	20,000 Per year	.026 ea
17.	*TRAVEL PERMIT SLIPS*	Letter Size Page (8½" x11") Double Sided Print, Black flat print 110 lb paper, cut into 4.	10,000 Per year	.03 ea

I) AUDITOR'S OFFICE

	Description		Estimated Qty	UNIT PRICE
1.	*LETTERHEAD PAPER*	8.5"x11", #24 lb Fine quality Bond Paper, one sided print, flat black ink print, watermark gray seal w/ light, dark gray and black shading 500 per ream: 25% Cotton (1st page)	2,000	.29 ea
2.	*LETTERHEAD PAPER*	8.5"x11", #24 lb Fine quality Bond Paper, one sided print, flat, w/gray watermark seal 500 per ream 25% Cotton (continuation page)	500	.19 ea

J) PRECINCT 3

Commissioner Joe Flores

	Description		Estimated Qty	UNIT PRICE
1.	*BUSINESS CARDS*	3½" X 2", Ink -Black Raised Lettering, w/Gold Foil Seal, Single sided print, portrait business card layout, 500 per each	1 box of 500	101.50 BX
2.	*ENVELOPES W/LOGO*	Size 4⅛" x 9½", Standard Envelopes, flat Print, black ink and black ink seal 500 per box	2 boxes /500	113.50 BX
3.	*LETTERHEAD PAPER*	8.5" X 11", #20 Fine quality Bond White Linen Paper one sided print, raised blue ink print, gold foil stamp seal w/blue lettering, 500 sheets per ream	2 boxes /500	169.00 RM
4.	*LETTERHEAD PAPER*	8.5" X 11", White Linen Paper Blue ink.	2 boxes /500	93.00 RM
5.	*PARKING PERMIT*	3½"x 5½" Single sided print, White paper w/red lettering, glue bind top, 50 sheets per booklet perforated at the top 2 staples	12/50 sheets	6.99 ea

K) CONSTABLE PRECINCT 1

	Description		Estimated Qty	UNIT PRICE
1.	*BUSINESS CARDS*	size: 3½"x2", Blue Ink, w/Watermark Seal (twelve individuals) Single sided flat print, Landscape layout 12KK CIS	500 per box	43.00 BX
2.	*NOTICE/AVISO–DOOR HANGER CARD*	size: 8½"x3¾ ; Black Ink, Double Sided flat print (English one side/Spanish other side) Neon Yellow Card Stock w/die cut	5,000	.12 ea

GDP

3.	*TICKET BOOK*	size: 5¼" x 7¾" 4 Part NCR, Paper Color Sequence-White, canary yellow, pink and golden rod, double sided print, black ink flat print, number sequence in red ink, 50 sheets per book wrap around perforated, Starting #varies Top Bind	200 books of 50 pages per bk	6.50 BK
4.	*VEHICLE IMPOUNDMENT INVENTORY RECORD*	size:8 ½x1"; 3 Part NCR, paper color sequence-white, canary yellow and pink, rod, black ink, single sided flat print, 25 sheets per book wrap around perforated	100 bks of 25 sheets per bk	6.50 BK

L) CONSTABLE PRECINCT 2

	Description		Estimated Qty	UNIT PRICE
1.	*BUSINESS CARDS*	Size: 3½"x2", ivory linen paper; flat print; color print; gold badge, blue, black ink, single sided print, landscape layout 80 lb	14 bxs of 500	49.00 BX
2.	*ENVELOPES*	Size 4⅛" x 9½", standard envelopes, flat print, black ink,	4 boxes of 500	197.00 BX
3.	*LETTERHEAD PAPER*	size : 8½ x11",white or ivory linen paper and full color printing, one sided print, flat print, black/gray ink, watermark seal, 5,000 sheets per box	2 boxes	1069.00 BX
4.	*OFFICIAL RECEIPTS for CONSTABLES FEES*	3 part NCR–Paper Color Sequence– white, canary yellow, pink, black ink, single sided flat print number sequence black ink, three (3) receipts per page, 100 sheets per book, 50 sets per book ;die cut (tear out rcpt) wrap around perforated, side glue bind	3 books	29.00 BK
5.	*TICKET BOOK*	size: 5¼"x7¾"–4 Part NCR, paper color sequence- white, canary yellow, pink and golden rod, double sided print, black ink flat print, number sequence in red ink, top bind	50 books of 20 sheets per bk	7.50 BK
6.	*WARNING FLYERS/ ADVERTENCIA FLYERS*	Size: 8½" x11", peel stick, neon yellow, black ink one sided flat print (English / Spanish)	4 boxes of 5,000	1278.60 BOX

M) CONSTABLE PRECINCT 3

	Description		Estimated Qty	UNIT PRICE
1.	*BUSINESS CARDS*	3½"x2",blue and gold ink raised lettering, w/seal two colors blue/gold, single sided print, 500 per box, 8 individuals, landscape layout 80 lb	500 per box per order	35.80 BX
2.	*BUSINESS CARDS*	3½"x2",blue and gold ink raised lettering, w/seal two colors blue/gold, single sided print, landscape layout 80 lb	2 boxes of 1000 per order	38.50 BX
3.	*ENVELOPES*	Size4⅛"x9½", Standard Envelopes, Flat Print, 2 color ink Blue and Gold, 2 color seal (Blue and Gold 500 per box	4 bxs /500 per order	26.00 BX
4.	*LETTERHEAD PAPER*	8.5x11",#20 bond paper white linen 92 brightness one sided print, flat print, 2 color ink blue/gold),w/seal (gold/blue),500 sheets per ream	4 reams per order	69.00 RM
5.	*NOTICE/AVISO- DOOR HANGER CARD*	8½"x3¾";black ink, double sided flat print (english one side-spanish other side) neon orange card stock w/die cut	2,000 per order	.12 ea
6.	*OFFICIAL RECEIPT FOR CONSTABLES FEES*	3 part NCR – Paper Color Sequence White, Canary Yellow, Pink, Black ink, single sided flat print ,Number Sequence black ink, three (3) Receipts per page, 100 sheets per book, 50 sets per book ;Die cut (tear out receipt) Side Glue Bind;	2 books	45.00 BK
7.	*TICKET BOOK*	5¼"x7 ¾"; 4 Part NCR, Paper Color Sequence-White, canary yellow, pink and golden rod, double sided print, black and red ink flat print, number sequence in red ink, 25 sheets per book, Top Glue Bind	40-booklets per order	8.91 BK
8.	*VEHICLE IMPOUNDMENT INVENTORY RECORD*	7½"x 5"; 4 Part NCR, Paper Color Sequence- White, Canary Yellow, Pink and Golden Rod, Black Ink, Single Sided flat print, 25 sheets per book wrap around	80/25 per bk per order	8.10 BK
9.	*WARNING BOOK*	2 parts NCR, paper color sequence-white , golden rod, wrap around cover perforated, 50 sets double sided print, black and red ink flat print, number sequence in red ink,	50 sets per book	9.00 BK
10.	*WARNING FLYERS/ ADVERTENCIA FLYERS*	ENGLISH-Size 8 ½"x11", Peel Stick, Neon Orange, Black Ink one sided flat print; SPANISH-Size 8½"x11", Peel Stick, Neon Limeade Green, Black Ink one sided flat print	750 sheets per order	.36 ea
11.	*WARNING NOTICE TO VACATE*	Size 8½"x11, Peel Stick, Neon Yellow, Black Ink one sided flat print,	750 sheets per order	.36 ea

N) COUNTY CLERK'S OFFICE

	Description		Estimated Qty	UNIT PRICE
1.	*BUSINESS CARDS*	*SUPERVISORS* -3½"x2",Gray linen, 2 ink, double sided, black seal with blue lettering, raised lettering 500 per box landscape layout	30 boxes of 500 per order	82.00 BX

GDP

2.	*BUSINESS CARDS*	*COLLECTORS* -3½" x 2", White smooth card, 2 ink, double sided, black seal with blue lettering, raised lettering 500 per box landscape layout	2,500 per order	64.00 BX
3.	*BUSINESS CARDS*	*GENERAL OFFICE* -3½"x2",Double Sided, 2 inks, fronts has raised black seal, blue ink raised lettering, w/black raised seal and lettering back side flat back letters, 500 per box, landscape layout	30 boxes of 500 per order	64.00 BX
4.	*CLERK'S REPORT CARD*	Index Card-4"x 6 ½",110# Index, 1 ink, black, flat lettering, one side	1,000 per order	.057 ea
5.	*ENVELOPES* no window	SMALL-#28 White wove, white envelopes,7½"x10½", Blue ink flat lettering, with black seal peel and seal , without window, 2 inks, one sided flat print, black seal w/blue flat lettering,	6,000 per order	.189 ea
6.	*ENVELOPES* no window	MED-#28-White wove , white envelopes , 12"x 9" Blue ink flat lettering, with black seal, peel and seal , without window,2 inks, one sided flat print, black seal w/blue flat lettering,	6,000 per order	.189 ea
7.	*ENVELOPES* no window	LARGE-#28-White wove, white envelopes,12"x15½" Blue ink flat lettering, with black seal, peel and seal, without window,2 inks, one sided flat print, black seal with blue flat lettering	6,000 per order	.29 ea
8.	*ENVELOPES COLLECTIONS* with window	Size 4 1/8 " x 9 ½ ", #10 Standard white envelopes with window, 1 ink-black logo & black flat lettering on one side, **regular gum**	30 boxes of 500 per box	17.97 BX
9.	*ENVELOPES COLLECTIONS-* with window	Size 4 1/8"x9½ ", #24 envelopes with window #24 Canary yellow, 2 ink, one sided flat print, black seal w/ black flat lettering and red "FINAL NOTICE", self seal, black logo & black flat lettering on one side, **regular gum**	30 boxes of 500per box	27.00 BX
10.	*ENVELOPES-OFFICE* with window	Size4 ⅛"x 9½",#10 Standard Envelopes with window 2 inks, one sided flat print, black seal with blue flat lettering, , (peel and seal)	30 boxes of 500 per box	48.00 BX
11.	*ENVELOPES-OFFICE* without window	size 4⅛ x9½,#10-standard envelopes, no window, 2 inks, one sided flat print, black seal with blue flat lettering (peel and seal)	30 boxes of 500 per box	41.00 BX
12.	*LETTERHEAD PAPER*	#20-8 ½"x11", Fine quality White Bond Paper 25 % cotton, one sided flat print, black seal with blue flat lettering, watermark seal, 500 per ream,	30 reams of 500 sheets	37.00 RM
13.	*NEWLYWED LETTER*	#70-8.5"x11", fine quality white bond paper, 2 color front and 2 color back, blue//black ink, double sided, flat print (english & Spanish)60 lb	10,000ea	.049 ea
14.	*RECREATIONAL REGULATIONS CARDS*	FISHING-3½" x 2"double sided print, black, blue, red, green ink, shading-light blue	1,000 ea	1.05 ea
		HUNTING-3½"x2", Double sided print, black, blue, green ink, shading light blue	1,000 ea	1.05 ea
15.	*SCRATCH PADS*	Note pad 80 pages per tablet -4¼"x7",500 count 2 inks, one sided flat print, black seal with blue flat lettering round corners	500 pads	1.99 PAD

O) COUNTY COURT AT LAW # 6

Judge Albert Garcia

	Description		Estimated Qty	UNIT PRICE
1.	*BUSINESS CARDS*	3 ½" x 2", BLUE Raised Lettering, with Gold Ink Seal, Single sided Print, Portrait Landscape Layout, 500 per box 25 % cotton	1,000	39.00 BX
2.	*ENVELOPES- without window*	size 4 ⅛" x 9 ½", standard envelopes, raised print, blue ink w/ gold ink seal 500 per box, no window 25 %cotton	1,000	.169 ea
3.	*LETTERHEAD PAPER*	8.5" x 11", #20 fine quality bond paper one sided print, raised blue ink print gold ink stamp seal,25%cotton	5,000	.127 ea

P) DISTRICT ATTORNEY

	Description		Estimated Qty	UNIT PRICE
1.	*AUTHORIZATION FOR MEDICO LEGAL EXAMINATION*	8.5"x11" Paper size, 3 Part NCR, Paper color sequence-White, Canary Yellow and Pink, Black ink printing, Single sided print	1,000	.164 ea
2.	*CHECK WRITER FLYERS*	9.5"x11" Letter size paper, Canary Yellow Paper w/ white and red lettering on black background, Heavy weight paper, coated 80-110 lb. paper	500	.218 ea
3.	*CHECKS RECEIPT*	8.5"x11" Letter size Paper, watermark gray seal and lettering, 2 receipts per page, Perforated	5,000	.0258 ea
4.	*CRIMINAL MANILA FOLDERS*	Legal Size, Folder Stock, End tab, ½ Cut Folders w/ black ink print, 1,000 per box... Felony	10 boxes of 1,000	.192 ea
5.	*MANILA FOLDER*	Special die cut end with printing	10,000	.289 ea
6.	*MISDEMEANOR COMPLAINTS*	8.5" X 11" Letter size paper,3-part NCR, Black ink printing, continuous feed pink, canary, blue	10,000	.086 ea
7.	*VICTIM IMPACT STATEMENT*	8.5" X 11" Letter size paper, black ink print w/Gold Seal and lettering seal, double sided print 60 lb 2 color front 1 color back	5,000 per year	.053 ea

GDP

8.	*WORTHLESS CHECK AFFIDAVIT*	2 part NCR, Paper color sequence white and pink, one sided flat print, black ink only	9000	.567 ea

Q) DISTRICT CLERK'S OFFICE

	Description		Estimated Qty	UNIT PRICE
1.	*ENVELOPES- with window*	Size 4 ⅛" x 9 ½", standard envelopes, flat print, gray and black ink white lettering and black ink seal, with window	20,000	.036 ea
2.	*ENVELOPES- without window*	Size 4 ⅛" x 9 ½", standard envelopes, flat print, gray and black ink white lettering and black ink seal, with window no windows	20,000	.035 ea
3.	*ENVELOPES-with window*	Size 4 ⅛" x 9 ½", Standard Envelopes, flat Print, Black and Red ink and black ink seal, Light Blue Envelopes, with Window	120,000	.0279 ea
4.	*ENVELOPES- without window*	Size 3.875x 8.875", Standard Envelopes# 9-24, flat Print, black ink and watermark seal, Canary Yellow Envelopes, No Windows; black flat lettering on one side, self seal, additional operation: send away envelope	120,000	.0265 ea
5.	*ENVELOPES- without window*	#28-White wove, white envelopes, 12" x 9" Gray & Black ink flat lettering, with without window,, one sided flat print, white seal w/black flat lettering,	5,000	.129 ea
6.	*JURY SUMMONS FORM*	Size 8.5"x14"; #24 White paper Red & black inks; partial vertical and horizontal perfs for badge; 2 sided	60,000	.039 ea
7.	*LETTERHEAD PAPER*	8.5" X 11",Recyled Bond Paper; one sided flat print, with black flat lettering, watermark seal, ,	20,000	.055 ea

R) EMERGENCY MANGEMENT

	Description		Estimated Qty	UNIT PRICE
1.	*BUSINESS CARDS*	3 ½" x 2", BLUE Raised Lettering, with Gold Ink Seal, Single sided Print, Portrait Layout, 500 per box 25 % cotton	1,000	38.50BX

S) FIRE MARSHAL

	Description		Estimated Qty	UNIT PRICE
1.	*BUSINESS CARDS*	3 ½" x 2", black flat lettering, with Gold Ink Seal & badge blue flat lettering, double sided Print, landscape Layout, 500 per box 25 % cotton Full color, Printed on two sides, White Stock	1,000	53.00 BX

T) H.I.D.T.A. TASK FORCE

	Description		Estimated Qty	UNIT PRICE
1.	*BUSINESS CARDS*	3½"x2", Black ink Raised print, w/ gold raised seal, Single sided print-500 per box, landscape layout 80 lb cover	500 bx	35.80 BX
2.	*DIVIDERS MULTI-COLOR*	9"x11" - 8 Tab Dividers per set, labeled, Multi Color	400 sets	1.47 SET
3.	*ENVELOPES-without window*	Size 4⅛"x 9½", Standard Envelopes, raised black print, w/gold raised ink seal 500 per box, without window 24 lb 25 % Cotton	1,000	.129 ea
4.	*INVESTIGATIVE FILE JACKET*	Page size: 9" x12 7/8 , Canary Yellow Tag Board, Black ink front & back of front cover page only back page blank w/ two hole punch on top (centered) 140 lb(case file covers)	1,000 per order	.589 ea
5.	*INVESTIGATIVE FILE JACKET*	9"x12 7/8 " Page size, Light Blue Tag Board, Black ink front & back of front cover back page blank w/ two hole punch on top (centered) 140 lb (case file covers)	1,000 per order	.589 ea
6.	*LETTERHEAD PAPER*	8.5"x11", Fine quality paper, Raised lettering, black ink, gold raised seal 500 per ream 24 lb 25 % Cotton	1000 per order	.129 ea
7.	*MAILING LABELS*	3"x4" flat print, black ink w/gold ink stamp, 500 per roll	500 per roll	.358 ea
8.	*NAME PLATE*	wood base, w/black, brass double mounted, w/2 seals, w/name and title	On as needed basis	135.00 ea
9.	*RECEIPT FOR FORMS*	8.5" x11" Page size, 2-part NCR, Paper sequence: White and Canary Yellow, Black ink flat print, one sided print	500	.12 ea
10.	*VEHICLE IMPOUNDMENT REPORT*	8.5" X 11.5" Page size, 3-part NCR, Paper Sequence: White, Canary Yellow and Pink, black ink flat print, one sided print perforated	500	.259 ea

U) HUMAN RESOURES

Description	Estimated Qty	UNIT PRICE

GDP

1.	*BUSINESS CARDS*	3½"x2",blue ink raised lettering/gold ink stamp w/blue raised lettering, single sided print-500 per box, landscape layout white linen 80lb	500 per box	39.90 BX
2.	*ENVELOPES W/LOGO*	Size 4⅛"x9½", standard envelopes, flat blue, w/gold foil stamp seal 500 per box, plain with no window white linen 24lb	4 boxes of 500 ea box	139.00 BX
3.	*LETTERHEAD PAPER*	8.5"x11",fine quality bond paper, blue lettering w/gold foil stamp w/blue lettering, w/watermark print, 500 per ream white linen 24 lb	20 reams of 500	121.00 RM

V) JUVENILE JUSTICE CENTER

	Description		Estimated Qty	UNIT PRICE
1.	*ENVELOPES-no window*	Size 4⅛" x9½", Standard Envelopes, flat blue lettering, w/gold ink seal w/blue flat lettering seal 500 per box, Plain no window envelope	20 boxes of 500 per order	17.90 BX
2.	*LETTERHEAD PAPER*	85"x11",#20 Fine quality white bond paper, one side print, flat print blue, gold ink seal w/ blue, flat lettering, 500 per ream 24 lb 25 % cotton	24 reams per order	29.50 RM

W) PUBLIC DEFENDER'S OFFICE

	Description		Estimated Qty	UNIT PRICE
1.	*BUSINESS CARDS*	Size: 3½"x2", Black ink raised lettering, w/raised gold seal and lettering, Single sided print-500 per box, landscape layout	25 boxes of 500	35.80 BX
2.	*ENVELOPES- with window*	Size 4 ⅛"x9½", Standard Envelopes, flat print blk, foil gold County seal with window envelope	8 box of 500	133.00 BX
3.	*ENVELOPES- without window*	Size 4 ⅛" x 9½", white wove , standard envelopes, flat print blk, gold foil county seal without window	8 box of 500	129.00 BX
4.	*LETTERHEAD PAPER*	8.5"x11", #20 Fine quality White Bond Paper-Ivory, one sided print, flat print blk, foil gold County seal	3 Reams of 500	121.00 RM

X) SAFETY DIVISION

	Description		Estimated Qty	UNIT PRICE
1.	*ENVELOPES- without window*	size 4⅛" x9½", standard envelopes, raised print, blue ink w/ gold ink seal 500 per box, no window 25 %cotton	1,000	.169 ea

Y) SHERIFF'S OFFICE

(Jail Dept)

	Description		Estimated Qty	UNIT PRICE
1.	*BAIL BOND FEE REFUND FORMS*	8½ "x11" Page Size, Single sided print, black ink print, 3-Part NCR, paper color sequence: white, canary yellow, pink, 2-hole top center punch, with number sequence in the upper right hand corner, top binding snap	300	.26 ea
2.	*INMATE REQUEST FORMS*	8½"x11" Page Size, Single sided print, black ink print, 3-Part NCR, All copies white paper, top binding all white snap	30,000 ea	.0602 ea

(Law Enforcement Dept.)

	Description		Estimated Qty	UNIT PRICE
3.	*ADMINISTRATIVE ACTION FORM*	Size 8½"x5", Single sided print, black ink print, 2-Part NCR, Paper color sequence: White, Canary Yellow, top glue	10,000	.049 ea
4.	*BUSINESS CARDS*	3½"x2"; 2 sided front and back-Front side gold sheriff's emblem on the left hand side with black raised letters with room enough for each individual's name centered fax #, phone # and email address Back side all black letters (cream linen)	1 box of 250	39.00 BX
5.	*BUSINESS CARDS*	3½"x2"; 1 sided gold sheriff's emblem on the left hand side with black raised letters with room enough for each individual's name centered fax #, phone # and email address (cream linen)	1 box of 250	52.00 BX
6.	*CHECKS Sheriff's Fee Account*	check size: 8.25"x3.5"; blue safety; black ink; 3 to sheet with voucher, numbered; 300 qty above 3 on yields 900 checks	300 qty	.55 ea 165.00 =roll
7.	*CHECKS Sheriff's Trust Fund*	check size: 8.25"x3.5"; yellow safety; black ink; 3 to sheet with voucher, numbered; 300 qty above 3 on yields 900 checks	300 qty	.55 ea 165.00 roll
8.	*CHILD ID CARD*	8½"x5½" Manila stock paper, 2 color dark blue (possibly 000033 or 000066) with seal gold/blue color w/double sided tape ½'x2" back to Back printing, score across center of paper	5,000	.139 ea
9.	*CITATION BOOKS*	Size:8½"x5",top binding (Perforated) Black ink print and red ink, 4 carbonless paper with each one having it's only individual printing in the back, (1st white paper with black and red ink, 2nd yellow paper with black and red ink, 3rd pink paper with black and red ink, and 4th paper blue paper with	25 per book 250 books	4.72 BK

GDP

		black and red ink. With Sheriff's logo (Blk) in the middle of each carbonless paper. Wrap around book		
10.	*CIVIL and WARRANTS WRIT of POSSESSION NOTICE*	8½"x11" Card Stock Single sided print, red ink print, Label stock	1,000	.215 ea
11.	*DEPOSIT SLIP BOOKS Sheriff's Fee Account*	2-part carbonless; black ink (white, canary) 50 sets per book; 800 qty above yields- 800 slips, 16 books, 50 sets per book	16 books	9.07 BK
12.	*DEPOSIT SLIP BOOKS Sheriff's Trust Account*	2-part carbonless; black ink (white, canary) 50 sets per book; 800 qty above yields- 800 slips, 16 books, 50 sets per book	16 books	9.07 BK
13.	*DEPUTATION*	8.5 x14.; 24# bond, reflex blue and black ink on 2 sides, shrink wrap in 500's 20lb	300	.29 ea
14.	*DIC-24 Statutory Warning*	8.5 x11, 15#cb white, 14.5#cf yellow carbonless paper, black ink 1 side, shrink wrap in 250's	100	.29 ea
15.	*DIC-25 Notice Of Suspension*	temp. driving permit--8.5x 11, 15#cb white, 14.5#cf yellow, carbonless paper, black ink 2 sides, shrink wrap in 250's 2 part padded	100	.29 ea
16.	*ENVELOPE*	5½"x3¼", manila envelope, black ink, front side print	3,000	.12 ea
17.	*ENVELOPE – Latent Print*	size:6½"x3½",white envelope, black ink, one front side print	2,000	.067 ea
18.	*EVIDENCE CARDS*	5"x4¼" Card Stock, White Paper, Single sided print, Black ink 67 lb	6,000	.0215 ea
19.	*EVIDENCE/INVENTORY CONTROL REPORT*	8½"x14"; single sided print, black ink print, 3-part NCR, paper color sequence: white, canary yellow, pink,	1,000	.229 ea
20.	*FIELD INTERVIEW CARDS*	8½"x5½"; double sided print, black ink print, Hidalgo County Sheriff's emblem on the upper left hand corner. (front) (back) SYNOPSIS: 13 LINES	5,000	.021 ea
21.	*IMPOUND BOOKS*	8"x5" sheet top binding (Perforated) with a manila cover 8", Black Ink, 4 part carbonless sheets 1st is white, 2nd is yellow, 3rd pink, and 4th orange with no printing in the back wrap around book white, yellow, pink, orange	25 per book 100 books	6.59 BK
22.	*JR. SHERIFF BADGE STICKERS*	3" Roll, black background with gold foil seal	5,000 sticker	.054 ea
23.	*LATENT FINGERPRINT INDEX CARD*	Size 3"x5", White, Black ink print, front side print; back glossy side	5,000	.039 ea
24.	*MAINTENANCE BOOKS*	size: 9"x5½", 1st White carbonless paper, 2nd yellow paper, Black ink, front print top binding (Perforated)	25 per bk 250 bks	2.11 BK
25.	*MOTOR POOL Service Request*	8½" x3¾" Blk lettering	1,000	.049 ea
26.	*MOTOR POOL- Service Request Sticker*	4"x2" Blk Lettering roll	1,000	.073 ea
27.	*NAME PLACEMENT CARD*	10"x 8"- Beige card stock (FFCC66) Ink color dark brown (possibly 663300 or 330000), Score across center of card	500	.238 ea
28.	*OFFENSE REPORTS Property Reporting*	8½"x11" Page Size, White Paper, single sided print, Black ink 20lb	10,000	.023 ea
29.	*OFFENSE REPORTS- NARRATIVE*	8½"x11" Page Size, White Paper, Single sided print, black ink print 20lb	40,000	.0199 ea
30.	*OFFENSE/INCIDENT REPORTS- Front and Back*	8½"x11" Page Size, White Paper, double sided print, Black ink 20 lb	30,000	.0279 ea
31.	*OFFICIAL PHOTOGRAPH*	3"x2½", White label stock, Black ink, front side print	2,000	.094 ea
32.	*OPERATION CHILD SAFEGUARD*	17x22" Poster: Full Glossy Color 80lb glossy cover	500	1.15 ea
33.	*OPERATION CHILD SAFEGUARD FLYERS*	8½"x11" Page Size, 80 lb gloss cover paper 4 color process	5,000	.077 ea
34.	*RECEIPT BOOK- Inmate Trust*	7.25x11 (4 up manifold Book/Numbered) 3 part carbonless (white, yellow, pink) NOTE 3rd. page without manifold Black 1-side, All parts the same 4 up receipt book, Repeat order sequential number	50 sets per book 200	5.45 BK
35.	*RECEIPT BOOK- Official Receipt for Sheriff's fee's*	17"x8.5" (individual. receipt size 8"x4.25")3 part NCR white, green, canary; blank ink; 4 on a sheet, numbered receipts3pt with perfing white & green copy only, wrap around covers; 5,000, above yields (100 books, 50 sets/200 receipts per books)	100 books	9.79 BK
36.	*RECEIPT BOOK- Official Receipt for Sheriff's Trust Funds*	17"x8.5" (individual. receipt size 8"x4.25")3 part NCR white, green, canary; blank ink; 4 on a sheet, numbered receipts3pt with perfing white & green copy only, wrap around covers; 5,000, above yields (100 books, 50 sets/200 receipts per books)	100 books	9.79 BK
37.	*RECRUITMENT FLYERS*	8½"x11" Page Size, 80lb gloss print 4 color both sides , tri-fold (score)	5,000	.11 ea
38.	*THE STATE OF TEXAS STATEMENT OF ELECTED/APPOINTED*	8.5x11; 20# bond, reflex blue & black ink 1 side, pad in 100's shrink wrap in 500's	300	.20 ea

GDP

	OFFICER			
39.	*TIME EARNED/ABSENCE REQUEST FORM*	8½"x11"; Single sided print, black ink print, 3-Part NCR, top binding (Perforated) Paper Color Sequence: Blue, Yellow Pink	5,000	.119 ea
40.	*VICTIM'S BILL OF RIGHTS PAMPHLET*	8½"x5¾"-white card Ink color black to be folded(3) tri-fold(score) 110 lb	5,000	.055 ea

Z) TAX ASSESSOR COLLECTOR

	AUTO LICENSE/TAX OFFICE		Estimated Qty.	UNIT PRICE
1.	*BUSINESS CARDS*	3½ "x2", black ink raised lettering, w/ gold raised stamp w/gold raised lettering, single sided print- landscape layout	1,000 per order	39.00 BX
2.	*BUSINESS CARDS*	3"x2", black ink raised lettering, w/ gold raised stamp w/gold raised lettering, single sided print- landscape layout	500 per order	35.80 BX
3.	*ENVELOPES without window*	Size:37/8 x 8 7/8" ; #9 return envelopes, flat black print, w/ black flat print seal 500 per box, plain with no window	5,000	.037 ea
4.	*ENVELOPES without window*	Size 4⅛"x9½", #10 standard envelopes ,flat black print, w/black flat print seal 500 per box, with no window (tax assessor/collector)	20,000 per order	.031 ea
5.	*ENVELOPES with window*	Size 4⅛"x9½", standard window, rev flap, 24# ww, diagonal seam, gum seal printed	60,000 per order	.0295 ea
6.	*LETTERHEAD PAPER*	8.5"x11", Fine quality bond paper, black lettering w/ gray watermark seal w/picture in various stages of gray shade, 500 per ream 24 lb 25% cotton	5,000	.16 ea
7.	*WATERMARK PAPER*	8.5"x11"; Bound paper, bond, rely, Rio Grande Valley Watermark	100	N/B
	AUTOMOBILE DEPT PLUS ALL SUBSTATIONS			
8.	*BUSINESS CARDS*	3½" x2", Black ink Raised Lettering, w/ gold raised stamp w/gold Raised lettering, Single sided print-landscape layout	500 per order	35.80 BX
9.	*COUNTY LIQUOR PERMIT*	Letter size (8 ½" x 11"), 3-Part NCR –Paper sequence (white, canary & pink) #17 One sided print-flat print black and red only for, pre-numbered red and title of form	150 50 per pack	6.29 PK
10.	*DEPUTATION CARDS*	Size: (3.875" x 2.375") index card-light green paper stock # 110 black ink flat print, rounded corners 67 lbs	250	.35 ea
11.	*ENVELOPES without window*	Size 6 ⅛" x 12 ½"), Standard Brown Envelopes, flat black print, w/ black flat print seal 500 per box, without windows (auto license plate envelope)	7,500	.271 ea
12.	*ENVELOPES without window*	Size (10 ½"x7 ½") Double-prong metal clasp w/reinforced eyelets for a secure closure Brown Clasp Envelopes/ 100 per box w/ black ink printing and black ink seal (TABC envelope)	10 bxs of 100	36.50 BX
13.	*LETTERHEAD PAPER*	8.5"x11", Fine quality bond paper, black lettering w/ gray watermark seal w/picture in various stages of gray shade, 500 per ream25% Cotton	5,000	.16 ea
14.	REFUND SLIPS	Size 7x3.25 off set , white 50# black padding with chipboard	3000 per order	.044 ea

AA.) TREASURER'S OFFICE

	Description		Estimated Qty	UNIT PRICE
1.	BUSINESS CARDS	3½"x2", GREEN ink Raised Lettering, w/ GREEN Seal w/ GREEN lettering, Single sided, landscape layout 80lb cover	500 per box	35.80 BX
2.	ENVELOPE -large window	envelope 5 ½ x 8 ¾, 2 ¾" x 5 ½ " window ½" from left 5/8 from top on 20lb paper	5,000 per order	.22 ea
3.	ENVELOPES with window	Size 4⅛"x 9½", Standard Envelopes, flat GREEN lettering, w/GREEN and gold seal w/ GREEN flat lettering seal with window	5,000 per order	.115 ea
4.	ENVELOPES without window	Size 4 ⅛"x 9 ½", Standard Envelopes, flat GREEN lettering, w/ GREEN and gold seal w/ GREEN flat lettering seal without window	5,000 per order	.0358 ea
5.	LETTERHEAD PAPER	8.5"x11", #20 Fine quality Bond Paper, one sided print, flat GREEN ink print, foil gold seal w/ green flat lettering 500 per ream 24lb 25 % cotton	1 ream of 500	104.00 RM
6.	RECEIPT–county seal	8.5"x 11" with County Seal in black	15,000 per order	.021 ea
7.	TREASURY MANUAL RECEIPT BOOK	8.5" x11." Page size, 3-part NCR, Paper Sequence: White, Canary Yellow and Pink, black ink flat print, One sided print-flat print black and red only for, pre-numbered red 2-booklets; 50 sheets per book	2 booklets	21.75 BK

GDP

EXHIBIT "C"
INSURANCE REQUIREMENTS

CERTIFICATE OF LIABILITY INSURANCE

DATE (MM/DD/YYYY): 05/28/2015

THIS CERTIFICATE IS ISSUED AS A MATTER OF INFORMATION ONLY AND CONFERS NO RIGHTS UPON THE CERTIFICATE HOLDER. THIS CERTIFICATE DOES NOT AFFIRMATIVELY OR NEGATIVELY AMEND, EXTEND OR ALTER THE COVERAGE AFFORDED BY THE POLICIES BELOW. THIS CERTIFICATE OF INSURANCE DOES NOT CONSTITUTE A CONTRACT BETWEEN THE ISSUING INSURER(S), AUTHORIZED REPRESENTATIVE OR PRODUCER, AND THE CERTIFICATE HOLDER.

IMPORTANT: If the certificate holder is an ADDITIONAL INSURED, the policy(ies) must be endorsed. If SUBROGATION IS WAIVED, subject to the terms and conditions of the policy, certain policies may require an endorsement. A statement on this certificate does not confer rights to the certificate holder in lieu of such endorsement(s).

PRODUCER Connelly & Bartnesky Insurance Agency 1209 E. Harrison, Suite A PO Box 2839 Harlingen, TX 78550	CONTACT NAME: Eddie Bartnesky PHONE (A/C, No, Ext): (956) 425-8821 FAX (A/C, No): (956) 425-0894 E-MAIL ADDRESS: eddie@connellybartnesky.com
INSURED Gulf Data Products E.A. Stone Inc. 810 E Harrison Harlingen, TX 78550	INSURER(S) AFFORDING COVERAGE — NAIC # INSURER A: Ohio Security Insurance Co INSURER B: INSURER C: INSURER D: INSURER E: INSURER F:

COVERAGES CERTIFICATE NUMBER: REVISION NUMBER:

THIS IS TO CERTIFY THAT THE POLICIES OF INSURANCE LISTED BELOW HAVE BEEN ISSUED TO THE INSURED NAMED ABOVE FOR THE POLICY PERIOD INDICATED. NOTWITHSTANDING ANY REQUIREMENT, TERM OR CONDITION OF ANY CONTRACT OR OTHER DOCUMENT WITH RESPECT TO WHICH THIS CERTIFICATE MAY BE ISSUED OR MAY PERTAIN, THE INSURANCE AFFORDED BY THE POLICIES DESCRIBED HEREIN IS SUBJECT TO ALL THE TERMS, EXCLUSIONS AND CONDITIONS OF SUCH POLICIES. LIMITS SHOWN MAY HAVE BEEN REDUCED BY PAID CLAIMS.

INSR LTR	TYPE OF INSURANCE	ADDL INSR	SUBR WVD	POLICY NUMBER	POLICY EFF (MM/DD/YYYY)	POLICY EXP (MM/DD/YYYY)	LIMITS	
A	GENERAL LIABILITY	X						
	☑ COMMERCIAL GENERAL LIABILITY			BZS56727269	05/28/2015	05/28/2016	EACH OCCURRENCE	$ 1,000,000
	☐ CLAIMS-MADE ☑ OCCUR						DAMAGE TO RENTED PREMISES (Ea occurrence)	$ 1,000,000
							MED EXP (Any one person)	$ 15,000
							PERSONAL & ADV INJURY	$ 1,000,000
	GEN'L AGGREGATE LIMIT APPLIES PER:						GENERAL AGGREGATE	$ 2,000,000
	☑ POLICY ☐ PRO-JECT ☐ LOC						PRODUCTS - COMP/OP AGG	$ 2,000,000
								$
	AUTOMOBILE LIABILITY						COMBINED SINGLE LIMIT (Ea accident)	$
	☐ ANY AUTO						BODILY INJURY (Per person)	$
	☐ ALL OWNED AUTOS ☐ SCHEDULED AUTOS						BODILY INJURY (Per accident)	$
	☐ HIRED AUTOS ☐ NON-OWNED AUTOS						PROPERTY DAMAGE (Per accident)	$
								$
	☐ UMBRELLA LIAB ☐ OCCUR						EACH OCCURRENCE	$
	☐ EXCESS LIAB ☐ CLAIMS-MADE						AGGREGATE	$
	☐ DED ☐ RETENTION $							$
	WORKERS COMPENSATION AND EMPLOYERS' LIABILITY Y/N						☐ WC STATU-TORY LIMITS ☐ OTH-ER	
	ANY PROPRIETOR/PARTNER/EXECUTIVE OFFICER/MEMBER EXCLUDED? ☐ (Mandatory in NH)	N/A					E.L. EACH ACCIDENT	$
	If yes, describe under DESCRIPTION OF OPERATIONS below						E.L. DISEASE - EA EMPLOYEE	$
							E.L. DISEASE - POLICY LIMIT	$

DESCRIPTION OF OPERATIONS / LOCATIONS / VEHICLES (Attach ACORD 101, Additional Remarks Schedule, if more space is required)

CERTIFICATE HOLDER

Hidalgo County
2802 S Business 281
Edinburg, TX 78539

CANCELLATION

SHOULD ANY OF THE ABOVE DESCRIBED POLICIES BE CANCELLED BEFORE THE EXPIRATION DATE THEREOF, NOTICE WILL BE DELIVERED IN ACCORDANCE WITH THE POLICY PROVISIONS.

AUTHORIZED REPRESENTATIVE

Eddie Bartnesky

© 1988-2010 ACORD CORPORATION. All rights reserved.

The ACORD name and logo are registered marks of ACORD

CERTIFICATE OF LIABILITY INSURANCE

DATE (MM/DD/YYYY): 03/04/2016

THIS CERTIFICATE IS ISSUED AS A MATTER OF INFORMATION ONLY AND CONFERS NO RIGHTS UPON THE CERTIFICATE HOLDER. THIS CERTIFICATE DOES NOT AFFIRMATIVELY OR NEGATIVELY AMEND, EXTEND OR ALTER THE COVERAGE AFFORDED BY THE POLICIES BELOW. THIS CERTIFICATE OF INSURANCE DOES NOT CONSTITUTE A CONTRACT BETWEEN THE ISSUING INSURER(S), AUTHORIZED REPRESENTATIVE OR PRODUCER, AND THE CERTIFICATE HOLDER.

IMPORTANT: If the certificate holder is an ADDITIONAL INSURED, the policy(ies) must be endorsed. If SUBROGATION IS WAIVED, subject to the terms and conditions of the policy, certain policies may require an endorsement. A statement on this certificate does not confer rights to the certificate holder in lieu of such endorsement(s).

PRODUCER: STATE FARM INSURANCE ROBERT ELIZALDE, AGENT 5107 S MCCOLL RD EDINBURG, TX 78539	CONTACT NAME: OMAR RIVERA PHONE (A/C, No, Ext): 956-683-9800 FAX (A/C, No): 956-683-9810 E-MAIL ADDRESS: OMAR.RIVERA.KOTN@STATEFARM.COM
INSURED: RICHARD K. KANIPE GULF DATA PRODUCTS 1805 OAKS RD EDINBURG, TX 78539	INSURER(S) AFFORDING COVERAGE — NAIC # INSURER A : State Farm Mutual Automobile Insurance Company — 25178 INSURER B : INSURER C : INSURER D : INSURER E : INSURER F :

COVERAGES **CERTIFICATE NUMBER:** **REVISION NUMBER:**

THIS IS TO CERTIFY THAT THE POLICIES OF INSURANCE LISTED BELOW HAVE BEEN ISSUED TO THE INSURED NAMED ABOVE FOR THE POLICY PERIOD INDICATED. NOTWITHSTANDING ANY REQUIREMENT, TERM OR CONDITION OF ANY CONTRACT OR OTHER DOCUMENT WITH RESPECT TO WHICH THIS CERTIFICATE MAY BE ISSUED OR MAY PERTAIN, THE INSURANCE AFFORDED BY THE POLICIES DESCRIBED HEREIN IS SUBJECT TO ALL THE TERMS, EXCLUSIONS AND CONDITIONS OF SUCH POLICIES. LIMITS SHOWN MAY HAVE BEEN REDUCED BY PAID CLAIMS.

INSR LTR	TYPE OF INSURANCE	ADDL INSR	SUBR WVD	POLICY NUMBER	POLICY EFF (MM/DD/YYYY)	POLICY EXP (MM/DD/YYYY)	LIMITS	
	GENERAL LIABILITY						EACH OCCURRENCE	$
	COMMERCIAL GENERAL LIABILITY						DAMAGE TO RENTED PREMISES (Ea occurrence)	$
	CLAIMS-MADE OCCUR						MED EXP (Any one person)	$
							PERSONAL & ADV INJURY	$
	GEN'L AGGREGATE LIMIT APPLIES PER:						GENERAL AGGREGATE	$
	POLICY PRO-JECT LOC						PRODUCTS - COMP/OP AGG	$
								$
A	AUTOMOBILE LIABILITY			167 8540-C06-53-001	03/04/2016	09/06/2016	COMBINED SINGLE LIMIT (Ea accident)	$
	ANY AUTO						BODILY INJURY (Per person)	$ 500,000
	ALL OWNED AUTOS / SCHEDULED AUTOS (X)						BODILY INJURY (Per accident)	$ 500,000
	HIRED AUTOS / NON-OWNED AUTOS						PROPERTY DAMAGE (Per accident)	$ 500,000
								$
	UMBRELLA LIAB OCCUR						EACH OCCURRENCE	$
	EXCESS LIAB CLAIMS-MADE						AGGREGATE	$
	DED RETENTION $							$
	WORKERS COMPENSATION AND EMPLOYERS' LIABILITY						WC STATU-TORY LIMITS / OTH-ER	
	ANY PROPRIETOR/PARTNER/EXECUTIVE OFFICE/MEMBER EXCLUDED? Y / N						E.L. EACH ACCIDENT	$
	(Mandatory in NH) N / A						E.L. DISEASE - EA EMPLOYEE	$
	If yes, describe under DESCRIPTION OF OPERATIONS below						E.L. DISEASE - POLICY LIMIT	$

DESCRIPTION OF OPERATIONS / LOCATIONS / VEHICLES (Attach ACORD 101, Additional Remarks Schedule, if more space is required)

2005 TOYOTA HIGHLANDER JTEGD21A150111763

CERTIFICATE HOLDER

HIDALGO COUNTY
2802 S BUSINESS HWY 281
EDINBURG, TX 78539

CANCELLATION

SHOULD ANY OF THE ABOVE DESCRIBED POLICIES BE CANCELLED BEFORE THE EXPIRATION DATE THEREOF, NOTICE WILL BE DELIVERED IN ACCORDANCE WITH THE POLICY PROVISIONS.

AUTHORIZED REPRESENTATIVE

Omar Javier Rivera

© 1988-2010 ACORD CORPORATION. All rights reserved.

ACORD® CERTIFICATE OF LIABILITY INSURANCE

DATE (MM/DD/YYYY): 5/4/2015

THIS CERTIFICATE IS ISSUED AS A MATTER OF INFORMATION ONLY AND CONFERS NO RIGHTS UPON THE CERTIFICATE HOLDER. THIS CERTIFICATE DOES NOT AFFIRMATIVELY OR NEGATIVELY AMEND, EXTEND OR ALTER THE COVERAGE AFFORDED BY THE POLICIES BELOW. THIS CERTIFICATE OF INSURANCE DOES NOT CONSTITUTE A CONTRACT BETWEEN THE ISSUING INSURER(S), AUTHORIZED REPRESENTATIVE OR PRODUCER, AND THE CERTIFICATE HOLDER.

IMPORTANT: If the certificate holder is an ADDITIONAL INSURED, the policy(ies) must be endorsed. If SUBROGATION IS WAIVED, subject to the terms and conditions of the policy, certain policies may require an endorsement. A statement on this certificate does not confer rights to the certificate holder in lieu of such endorsement(s).

PRODUCER	CONTACT NAME: Elsa Gonzalez
RICK VILLARREAL INS AGENCY 2116 W University Dr Edinburg, TX 78539	PHONE (A/C, No, Ext): (956) 383-7001 FAX (A/C, No): (956) 383-7009 E-MAIL ADDRESS: elsagonzalezz@yahoo.com

INSURER(S) AFFORDING COVERAGE	NAIC#
INSURER A : Farmers Truck Insurance Exchange	
INSURER B :	
INSURER C :	
INSURER D :	
INSURER E :	
INSURER F :	

INSURED: Gulf Data Products
E.A. Stone Inc.
810 E Harrison
Harlingen, TX 78550
956-421-5711

COVERAGES CERTIFICATE NUMBER: REVISION NUMBER:

THIS IS TO CERTIFY THAT THE POLICIES OF INSURANCE LISTED BELOW HAVE BEEN ISSUED TO THE INSURED NAMED ABOVE FOR THE POLICY PERIOD INDICATED. NOTWITHSTANDING ANY REQUIREMENT, TERM OR CONDITION OF ANY CONTRACT OR OTHER DOCUMENT WITH RESPECT TO WHICH THIS CERTIFICATE MAY BE ISSUED OR MAY PERTAIN, THE INSURANCE AFFORDED BY THE POLICIES DESCRIBED HEREIN IS SUBJECT TO ALL THE TERMS, EXCLUSIONS AND CONDITIONS OF SUCH POLICIES. LIMITS SHOWN MAY HAVE BEEN REDUCED BY PAID CLAIMS.

INSR LTR	TYPE OF INSURANCE	ADDL INSR	SUBR WVD	POLICY NUMBER	POLICY EFF (MM/DD/YYYY)	POLICY EXP (MM/DD/YYYY)	LIMITS	
A	GENERAL LIABILITY [x] COMMERCIAL GENERAL LIABILITY [ ] CLAIMS-MADE [x] OCCUR GEN'L AGGREGATE LIMIT APPLIES PER: [x] POLICY [ ] PRO-JECT [ ] LOC	x		60191-95-32	06/01/2014	06/01/2015	EACH OCCURRENCE DAMAGE TO RENTED PREMISES (Ea occurrence) MED EXP (Any one person) PERSONAL & ADV INJURY GENERAL AGGREGATE PRODUCTS - COMP/OP AGG	$ 1,000,000 $ 100,000 $ 5,000 $ 1,000,000 $ 2,000,000 $ 2,000,000
	AUTOMOBILE LIABILITY [ ] ANY AUTO [ ] ALL OWNED AUTOS [ ] SCHEDULED AUTOS [ ] HIRED AUTOS [ ] NON-OWNED AUTOS						COMBINED SINGLE LIMIT (Ea accident) BODILY INJURY (Per person) BODILY INJURY (Per accident) PROPERTY DAMAGE (Per accident)	$ $ $ $
	[ ] UMBRELLA LIAB [ ] OCCUR [ ] EXCESS LIAB [ ] CLAIMS-MADE [ ] DED [ ] RETENTION $						EACH OCCURRENCE AGGREGATE	$ $
A	WORKERS COMPENSATION AND EMPLOYERS' LIABILITY ANY PROPRIETOR/PARTNER/EXECUTIVE OFFICER/MEMBER EXCLUDED? (Mandatory in NH) Y/N [Y] N/A If yes, describe under DESCRIPTION OF OPERATIONS below			A07076872	04/18/2015	04/18/2016	[x] WC STATU-TORY LIMITS [ ] OTH-ER E.L. EACH ACCIDENT E.L. DISEASE - EA EMPLOYEE E.L. DISEASE - POLICY LIMIT	$ 1,000,000 $ 1,000,000 $ 1,000,000

DESCRIPTION OF OPERATIONS / LOCATIONS / VEHICLES (Attach ACORD 101, Additional Remarks Schedule, if more space is required)

CERTIFICATE HOLDER

Hidalgo County
2802 Business US 281
Edinburg, Tx 78539

CANCELLATION

SHOULD ANY OF THE ABOVE DESCRIBED POLICIES BE CANCELLED BEFORE THE EXPIRATION DATE THEREOF, NOTICE WILL BE DELIVERED IN ACCORDANCE WITH THE POLICY PROVISIONS.

AUTHORIZED REPRESENTATIVE

© 1988-2010 ACORD CORPORATION. All rights reserved.

The ACORD name and logo are registered marks of ACORD

Zimbra **evangelina.garcia@co.hidalgo.tx.us**

RE: Contract-General Printing Services and Related Supplies

From : Steve Crain <scrain@atlashall.com> Thu, May 28, 2015 09:25 AM
Subject : RE: Contract-General Printing Services and Related Supplies
To : 'Evangelina Garcia' <evangelina.garcia@co.hidalgo.tx.us>

It is fine except for the insurance.

From: Evangelina Garcia [mailto:evangelina.garcia@co.hidalgo.tx.us]
Sent: Thursday, May 28, 2015 8:17 AM
To: Steve Crain
Cc: Martha Salazar
Subject: Re: Contract-General Printing Services and Related Supplies

Good Morning Mr. Crain;
Attached is the revised document as requested for your review and approval and as Marty indicates below, while the vendor has been informed of securing an updated general liability accord.

Thank you,

Vangie Y. Garcia, Contract Manager
Hidalgo County Purchasing Department
2812 S. Business Hwy. 281
Edinburg, Texas 78539
Email: evangelina.garcia@co.hidalgo.tx.us
Phone: 956-292-7000-Ext. 4856

From: "Martha Salazar" <martha.salazar@co.hidalgo.tx.us>
To: "Evangelina Garcia" <evangelina.garcia@co.hidalgo.tx.us>
Sent: Wednesday, May 27, 2015 2:26:58 PM
Subject: Fwd: Contract-General Printing Services and Related Supplies

Response.

From: "Steve Crain" <scrain@atlashall.com>
To: "Martha Salazar" <martha.salazar@co.hidalgo.tx.us>
Sent: Wednesday, May 27, 2015 2:14:47 PM
Subject: RE: Contract-General Printing Services and Related Supplies

Account Number / Description		Original Budget	Adjusted Budget	Y-T-D Encumbrance	Y-T-D Expended	Available Balance	Percent Used
1100 GENERAL FUND							
7-1100-412-00-001-001-0-550	92ND DC-PRINTING & BINDING	1,000.00	1,000.00	.00	.00	1,000.00	.00
7-1100-412-00-002-001-0-550	93RD DC-PRINTING & BINDING	700.00	700.00	.00	.00	700.00	.00
7-1100-412-00-003-001-0-550	139TH DC-PRINTING & BINDING	700.00	700.00	.00	.00	700.00	.00
7-1100-412-00-004-001-0-550	206TH DC-PRINTING & BINDING	1,500.00	1,500.00	225.00	511.35	763.65	49.09
7-1100-412-00-006-001-0-550	332ND DC-PRINTING & BINDING	1,000.00	800.00	.00	.00	800.00	.00
7-1100-412-00-008-001-0-550	389TH DC-PRINTING & BINDING	2,500.00	2,500.00	.00	.00	2,500.00	.00
7-1100-412-00-009-001-0-550	398TH DC-PRINTING & BINDING	1,500.00	1,217.00	1,001.00	.00	216.00	82.25
7-1100-412-00-010-001-0-550	430TH DC-PRINTING & BINDING	1,000.00	1,000.00	71.60	.00	928.40	7.16
7-1100-412-00-011-001-0-550	449TH DC-PRINTING & BINDING	.00	3,000.00	2,991.00	.00	9.00	99.70
7-1100-412-00-021-001-0-550	CCL#1-PRINTING & BINDING	.00	600.00	.00	.00	600.00	.00
7-1100-412-00-022-001-0-550	CCL#2-PRINTING & BINDING	63.00	63.00	.00	.00	63.00	.00
7-1100-412-00-024-001-0-550	CCL#4-PRINTING & BINDING	200.00	200.00	.00	.00	200.00	.00
7-1100-412-00-025-001-0-550	CCL#5-PRINTING & BINDING	600.00	300.00	.00	.00	300.00	.00
7-1100-412-00-026-001-0-550	CCL#6-PRINTING & BINDING	.00	700.00	489.50	.00	210.50	69.93
7-1100-412-00-027-001-0-550	CCL#7-PRINTING & BINDING	802.00	100.00	.00	.00	100.00	.00
7-1100-412-00-061-001-0-550	JP PCT 1/PL 1-PRINTING & BINDING	2,000.00	2,000.00	1,987.70	.00	12.30	99.39
7-1100-412-00-062-001-0-550	JP PCT 1/PL 2-PRINTING & BINDING	2,000.00	700.00	.00	.00	700.00	.00
7-1100-412-00-063-001-0-550	JP PCT 2/PL 1-PRINTING & BINDING	2,000.00	1,118.00	690.00	.00	428.00	61.72
7-1100-412-00-064-001-0-550	JP PCT 2/PL 2-PRINTING & BINDING	2,000.00	815.60	.00	.00	815.60	.00
7-1100-412-00-065-001-0-550	JP PCT 3/PL 1-PRINTING & BINDING	2,000.00	1,194.64	95.00	.00	1,099.64	7.95
7-1100-412-00-066-001-0-550	JP PCT 3/PL 2-PRINTING & BINDING	2,000.00	2,000.00	714.00	.00	1,286.00	35.70
7-1100-412-00-067-001-0-550	JP PCT 4/PL 1-PRINTING & BINDING	2,000.00	2,000.00	225.00	.00	1,775.00	11.25
7-1100-412-00-068-001-0-550	JP PCT 4/PL 2-PRINTING & BINDING	2,000.00	590.00	.00	.00	590.00	.00
7-1100-412-00-080-002-0-550	CRIM DA-PRINTING & BINDING	7,000.00	11,684.58	1,681.40	6,518.05	3,485.13	70.17
7-1100-412-00-080-013-0-550	DA CIVIL LITIGATION-PRINTING & BINDING	150.00	150.00	.00	34.95	115.05	23.30
7-1100-412-00-090-001-0-550	DIST CLERK-PRINTING & BINDING	20,000.00	20,000.00	67.43	11,763.86	8,168.71	59.16
7-1100-412-30-085-003-0-550	PUBLIC DEFENDER-PRINTING & BINDING	1,500.00	1,500.00	71.60	71.60	1,356.80	9.55
7-1100-413-00-110-006-0-550	CO JUDGE-PRINTING & BINDING	1,000.00	1,000.00	.00	404.45	595.55	40.45

Account Number / Description		Original Budget	Adjusted Budget	Y-T-D Encumbrance	Y-T-D Expended	Available Balance	Percent Used
1100 GENERAL FUND							
7-1100-413-00-110-077-0-550	PUBLIC AFFAIRS-PRINTING & BINDING	37,600.00	37,600.00	.00	69.90	37,530.10	.19
7-1100-413-00-125-001-0-550	EXECUTIVE OFFICE-PRINTING & BINDING	163.00	163.00	.00	.00	163.00	.00
7-1100-413-30-125-004-0-550	CO COMM-PRINTING & BINDING	.00	375.00	.00	375.00	.00	100.00
7-1100-414-00-130-001-0-550	ELECTIONS DEPT-PRINTING & BINDING	26,059.00	26,059.00	19,704.32	3,373.79	2,980.89	88.56
7-1100-415-00-200-002-0-550	IT COUNTYWIDE-PRINTING & BINDING	.00	2,146.14	.00	2,146.14	.00	100.00
7-1100-415-14-115-001-0-550	DBM-BUDGET DIV-PRINTING & BINDING	1,976.00	1,976.00	.00	.00	1,976.00	.00
7-1100-415-15-140-001-0-550	TAX OFF-PRINTING & BINDING	12,000.00	12,000.00	3,415.00	1,128.95	7,456.05	37.87
7-1100-415-16-150-001-0-550	CO TREASURER-PRINTING & BINDING	5,000.00	5,000.00	.00	3,028.50	1,971.50	60.57
7-1100-415-18-160-001-0-550	PURCHASING-PRINTING & BINDING	2,000.00	1,500.00	.00	.00	1,500.00	.00
7-1100-415-21-170-001-0-550	CO AUDITOR-PRINTING & BINDING	1,378.00	1,850.00	.05	213.30	1,636.65	11.53
7-1100-415-40-180-001-0-550	CO CLERK-PRINTING & BINDING	20,000.00	20,000.00	545.97	3,136.00	16,318.03	18.41
7-1100-415-50-125-037-0-550	CIVIL SERVICE-PRINTING & BINDING	190.00	190.00	.00	.00	190.00	.00
7-1100-415-50-190-002-0-550	HUMAN RESOURCES-PRINTING & BINDING	2,500.00	750.00	.00	.00	750.00	.00
7-1100-419-10-210-001-0-550	PLANNING DEPT-PRINTING & BINDING	2,089.00	2,089.00	.00	1,454.00	635.00	69.60
7-1100-419-40-220-001-0-550	FACILITIES MGMT-PRINTING & BINDING	200.00	200.00	.00	.00	200.00	.00
7-1100-421-00-080-003-0-550	AUTOPSIES-PRINTING & BINDING	100.00	2,100.00	.00	.00	2,100.00	.00
7-1100-421-00-280-001-0-550	SHERIFF-PRINTING & BINDING	22,085.00	22,085.00	8,392.50	.00	13,692.50	38.00
7-1100-421-00-291-001-0-550	CONST PCT1-PRINTING & BINDING	1,000.00	457.42	.00	.00	457.42	.00
7-1100-421-00-292-001-0-550	CONST PCT2-PRINTING & BINDING	3,500.00	3,500.00	555.00	49.00	2,896.00	17.26
7-1100-421-00-293-001-0-550	CONST PCT3-PRINTING & BINDING	2,000.00	2,000.00	.00	.00	2,000.00	.00
7-1100-421-00-294-001-0-550	CONST PCT4-PRINTING & BINDING	3,000.00	1,941.25	.00	332.85	1,608.40	17.15
7-1100-422-10-300-001-0-550	FIRE MARSHAL-PRINTING & BINDING	2,000.00	2,000.00	47.50	1,452.90	499.60	75.02
7-1100-423-21-280-002-0-550	JAIL-PRINTING & BINDING	10,000.00	10,000.00	1,660.00	.00	8,340.00	16.60
7-1100-423-71-330-001-0-550	JUVENILE DS-PRINTING & BINDING	3,000.00	3,000.00	247.23	191.30	2,561.47	14.62
7-1100-429-00-110-075-0-550	EMERGENCY MGMT-PRINTING & BINDING	800.00	800.00	260.00	.00	540.00	32.50
7-1100-432-00-121-001-0-550	PCT1 SANITATION-PRINTING & BINDING	503.00	503.00	.00	200.00	303.00	39.76

Account Number / Description		Original Budget	Adjusted Budget	Y-T-D Encumbrance	Y-T-D Expended	Available Balance	Percent Used
1100 GENERAL FUND							
7-1100-432-00-122-001-0-550	PCT2 SANITATION-PRINTING & BINDING	300.00	300.00	.00	.00	300.00	.00
7-1100-432-00-123-001-0-550	PCT3 SANITATION-PRINTING & BINDING	1,000.00	1,000.00	.00	.00	1,000.00	.00
7-1100-432-00-124-001-0-550	PCT4 SANITATION-PRINTING & BINDING	200.00	200.00	.00	.00	200.00	.00
7-1100-432-70-125-039-0-550	NUISANCE ABATEMENT PRG-PRINTING & BINDIN	.00	562.65	160.10	402.55	.00	100.00
7-1100-441-00-340-001-0-550	HEALTH ADM-PRINTING & BINDING	10,000.00	10,000.00	1,659.00	39.75	8,301.25	16.99
7-1100-441-00-340-003-0-550	HEALTH CLINICS-PRINTING & BINDING	2,500.00	2,500.00	.00	.00	2,500.00	.00
7-1100-444-00-240-001-0-550	HUMAN SERVICES-PRINTING & BINDING	2,000.00	1,000.00	590.90	.00	409.10	59.09
7-1100-444-00-370-001-0-550	VETERANS SRV-PRINTING & BINDING	600.00	600.00	218.00	.00	382.00	36.33
7-1100-452-00-122-008-0-550	PCT2 PARKS-PRINTING & BINDING	1,000.00	.00	.00	.00	.00	.00
7-1100-452-00-123-008-0-550	PCT3 PARKS-PRINTING & BINDING	700.00	700.00	.00	.00	700.00	.00
7-1100-452-00-124-009-0-550	PCT4 PARKS-PRINTING & BINDING	952.00	952.00	806.15	.00	145.85	84.68
7-1100-466-00-122-018-0-550	PCT2 CRC SAN JUAN-PRINTING & BINDING	200.00	200.00	.00	.00	200.00	.00
1100 GENERAL FUND		**235,810.00**	**237,432.28**	**48,571.95**	**36,898.19**	**151,962.14**	**36.00**
1200 ROAD AND BRIDGE							
7-1200-431-00-121-004-0-550	PCT1 ADM-PRINTING & BINDING	3,191.00	3,191.00	170.00	703.45	2,317.55	27.37
7-1200-431-00-122-005-0-550	PCT2 ADM-PRINTING & BINDING	200.00	2,000.00	1,804.00	.00	196.00	90.20
7-1200-431-00-123-004-0-550	PCT3 ADM-PRINTING & BINDING	500.00	500.00	431.00	.00	69.00	86.20
7-1200-431-00-124-005-0-550	PCT4 ADM-PRINTING & BINDING	850.00	850.00	360.00	44.50	445.50	47.59
1200 ROAD AND BRIDGE		**4,741.00**	**6,541.00**	**2,765.00**	**747.95**	**3,028.05**	**53.71**
1223 DA FORFEITURE FUND-CCP CHAPTER 59							
7-1223-412-00-080-007-0-550	DA CCP59-PRINTING & BINDING	5,000.00	5,000.00	532.86	.00	4,467.14	10.66
1223 DA FORFEITURE FUND-CCP CHAPTER 59		**5,000.00**	**5,000.00**	**532.86**	**.00**	**4,467.14**	**10.66**
1246 T.A.C. SPECIAL VEHICLE INVENTORY							
7-1246-415-15-140-003-0-550	TAX OFF-PRINTING & BINDING	.00	19,500.00	.00	.00	19,500.00	.00
1246 T.A.C. SPECIAL VEHICLE INVENTORY		**.00**	**19,500.00**	**.00**	**.00**	**19,500.00**	**.00**
1247 LAW LIBRARY							
7-1247-412-50-100-001-0-550	LAW LIBRARY-PRINTING & BINDING	3,000.00	3,000.00	600.05	749.55	1,650.40	44.99
1247 LAW LIBRARY		**3,000.00**	**3,000.00**	**600.05**	**749.55**	**1,650.40**	**44.99**
1252 HIDTA FEDERAL SHARING-US TREASURY							
7-1252-412-00-270-012-0-550	HIDTA FED SHRG-US TREAS-PRINTING&BINDING	3,000.00	3,588.00	1,732.80	.00	1,855.20	

Account Number / Description		Original Budget	Adjusted Budget	Y-T-D Encumbrance	Y-T-D Expended	Available Balance	Percent Used
1252 HIDTA FEDERAL SHARING-US TREASURY							
7-1252-412-00-270-012-0-550	HIDTA FED SHRG-US TREAS-PRINTING&BINDING						48.29
1252 HIDTA FEDERAL SHARING-US TREASURY		**3,000.00**	**3,588.00**	**1,732.80**	**.00**	**1,855.20**	**48.29**
1281 DESIGNATED PURPOSE GRANTS LVL 1							
7-1281-412-00-080-018-6-550	CJD-DVSP-PRINTING & BINDING	.00	75.00	.00	.00	75.00	.00
1281 DESIGNATED PURPOSE GRANTS LVL 1		**.00**	**75.00**	**.00**	**.00**	**75.00**	**.00**
1285 DESIGNATED PURPOSE GRANTS LVL 5							
7-1285-421-00-115-006-6-550	RSWG-PRINTING & BINDING	.00	231.83	.00	.00	231.83	.00
1285 DESIGNATED PURPOSE GRANTS LVL 5		**.00**	**231.83**	**.00**	**.00**	**231.83**	**.00**
1292 WIC PROGRAM GRANTS							
7-1292-441-00-350-001-7-550	WIC ADM-PRINTING & BINDING	.00	5,000.00	351.90	1,346.35	3,301.75	33.97
7-1292-441-00-350-017-7-550	WIC LAC CENTER-PRINTING & BINDING	.00	2,951.00	.00	355.25	2,595.75	12.04
1292 WIC PROGRAM GRANTS		**.00**	**7,951.00**	**351.90**	**1,701.60**	**5,897.50**	**25.83**
1293 HEALTH DEPARTMENT GRANTS							
7-1293-441-00-340-006-8-550	RLSS/LPHS-PRINTING & BINDING	.00	3,598.50	.00	.00	3,598.50	.00
7-1293-441-00-340-008-8-550	T.B. CONTROL-PRINTING & BINDING	.00	5,000.00	.00	.00	5,000.00	.00
7-1293-441-00-340-012-8-550	IMM DIV LOCAL-PRINTING & BINDING	.00	10,000.00	.00	.00	10,000.00	.00
7-1293-441-00-340-013-6-550	CPS/HAZARDS-PRINTING & BINDING	.00	9.25	.00	.00	9.25	.00
7-1293-441-00-340-059-0-550	MEDICAID ADMIN-PRINTING & BINDING	.00	10,500.00	.00	.00	10,500.00	.00
7-1293-441-00-340-064-6-550	CPS/EBOLA-PRINTING & BINDING	.00	2,660.58	.00	.00	2,660.58	.00
7-1293-441-00-340-068-8-550	PHPR-PRINTING & BINDING	.00	13,512.00	.00	.00	13,512.00	.00
7-1293-441-00-340-070-7-550	PHHS-PRINTING & BINDING	.00	20,000.00	.00	.00	20,000.00	.00
7-1293-441-10-340-006-8-550	RLSS/LPHS-PRINTING & BINDING	.00	3,598.50	.00	.00	3,598.50	.00
7-1293-441-10-340-011-6-550	TB PREV&CNTRL-PRINTING & BINDING	.00	1,500.00	1,404.00	.00	96.00	93.60
7-1293-441-10-340-012-6-550	IMM DIV LOCAL-PRINTING & BINDING	.00	5,000.00	.00	.00	5,000.00	.00
7-1293-441-10-340-013-6-550	CPS/HAZARDS-PRINTING & BINDING	.00	7,650.00	.00	2,812.10	4,837.90	36.76
7-1293-441-10-340-061-6-550	TX HEALTHY COMMUNITIES-PRINTING & BINDIN	.00	7,543.00	.00	.00	7,543.00	.00
7-1293-441-10-340-070-7-550	PHHS-PRINTING & BINDING	.00	3,355.00	.00	.00	3,355.00	.00
7-1293-441-11-340-061-6-550	TX HEALTHY COMMUNITIES-PRINTING & BINDIN	.00	27,543.00	.00	.00	27,543.00	.00
1293 HEALTH DEPARTMENT GRANTS		**.00**	**121,469.83**	**1,404.00**	**2,812.10**	**117,253.73**	**3.47**
1297 ADULT PROBATION GRANTS							
7-1297-423-00-320-002-7-550	BASIC SUPERVISION-PRINTING & BINDING	.00	3,928.42	.00	216.30	3,712.12	5.51

Account Number / Description		Original Budget	Adjusted Budget	Y-T-D Encumbrance	Y-T-D Expended	Available Balance	Percent Used
1297 ADULT PROBATION GRANTS							
1297 ADULT PROBATION GRANTS		**.00**	**3,928.42**	**.00**	**216.30**	**3,712.12**	**5.51**
2201 SELF-FUNDED HEALTH BENEFITS							
7-2201-415-00-115-009-0-550	DBM-HEALTH INS ADM-PRINTING & BINDING	500.00	500.00	.00	.00	500.00	.00
2201 SELF-FUNDED HEALTH BENEFITS		**500.00**	**500.00**	**.00**	**.00**	**500.00**	**.00**
2202 SELF-FUNDED WORKERS' COMP							
7-2202-419-50-115-065-0-550	DBM-W/C DIV-PRINTING & BINDING	500.00	500.00	.00	.00	500.00	.00
2202 SELF-FUNDED WORKERS' COMP		**500.00**	**500.00**	**.00**	**.00**	**500.00**	**.00**
7 YEAR 2017		**252,551.00**	**409,717.36**	**55,958.56**	**43,125.69**	**310,633.11**	**24.18**

AI-59711 **Purchasing Department** **22. B. 3.**

CC - REGULAR

Meeting Date: 05/30/2017

Submitted For: Marty Salazar, PURCHASING DEPT.

Submitted By: Sandra Montalvo, PURCHASING DEPT.

Department: PURCHASING DEPT.

Information

CAPTION

Presentation of bids received for the purpose of award to the responsible vendor submitting the lowest & best bid [meeting all specifications and/or requirements] and approval of contract document for project titled: "Rental of Industrial Uniforms-Hidalgo County" through RFB No.: 2017-045-03-29-SMA

BACKGROUND

1. 7 packets distributed;
2. 2 bid submitted;
3. Recommended vendor: Unifirst Holdings;
4. Current Contract expires: 06-29-17 3;
5. Contract document was reviewed and approved by Legal Counsel as to form.

Fiscal Impact

CALENDAR YEAR: 2017 **ACCT. #:** 1100-421-00-280-001-0-340

FUNDS AVAILABLE Y/N?: y **MATCHING FUNDS Y/N?:** n

BUDGETARY IMPACT:

CALENDAR YEAR: 2017 **ACCT. #:** 1100-423-21-280-002-0-340

FUNDS AVAILABLE Y/N?: y **MATCHING FUNDS Y/N?:** n

BUDGETARY IMPACT:

CALENDAR YEAR: 2017 **ACCT. #:** 1200-431-00-121-005-0-340

FUNDS AVAILABLE Y/N?: y **MATCHING FUNDS Y/N?:** n

BUDGETARY IMPACT:

CALENDAR YEAR: 2017 **ACCT. #:** 1100-432-00-121-001-0-340

FUNDS AVAILABLE Y/N?: y **MATCHING FUNDS Y/N?:** n

BUDGETARY IMPACT:

CALENDAR YEAR: 2017 **ACCT. #:** 1100-452-00-121-013-0-340

FUNDS AVAILABLE Y/N?: y **MATCHING FUNDS Y/N?:** n

BUDGETARY IMPACT:

CALENDAR YEAR: 2017 **ACCT. #:** 1100-419-40-220-001-0-340

FUNDS AVAILABLE Y/N?: y **MATCHING FUNDS Y/N?:** n

BUDGETARY IMPACT:

CALENDAR YEAR: 2017 **ACCT. #:** 1100-441-00-340-001-0-340

FUNDS AVAILABLE Y/N?: y **MATCHING FUNDS Y/N?:** n

BUDGETARY IMPACT:

Attachments

Memos, Participation, Acceptance, Tab
1295 form
contract document

Form Review

Inbox	Reviewed By	Date
Purchasing - Internal	Marty Salazar	05/17/2017 04:38 PM
Budget & Management	Veronica Ortiz	05/18/2017 11:01 AM
Final Approval	Monica Salinas	05/26/2017 02:58 PM
Form Started By: Sandra Montalvo		Started On: 05/05/2017 09:30 AM
Final Approval Date: 05/26/2017		

Hidalgo County Purchasing Department
2812 S. Business Highway 281
Administration Building
Edinburg, Texas 78539
(956) 318-2626/ Fax: (956) 318-2629

RECEIVED
MAY 04 2017
By

MEMORANDUM

(Department's Recommendation)

TO: **ALL DEPARTMENT HEADS**

FROM: Sandra Montalvo, Buyer II
Hidalgo County Purchasing Department

DATE: **April 24, 2017**

RE: **BID AWARD RECOMMENDATION REQUEST**
Bid No. 2017-045-03-29-SMA-for HIDALGO COUNTY-*"Rental Industrial Uniforms"*

We have received **TWO (2) COMPLETE BID RESPONSES** to the above reference project. Enclosed you will find a copy of the tabulation sheet along with attachment A and questionnaire for your review and recommendation.

We would like to present your recommendation to Commissioner's Count Meeting; therefore, we need your response by no later **than MAY 5, 2017 @ 10:00 a.m.** to be able to present to Commissioner's Court.

Please indicate your recommendation or any concerns on the space provided below and return **via email to: sandra.montalvo@co.hidalgo.tx.us.**

Should you have any questions or require further information please do not hesitate to call me at 318-2626- ext. 4865. Thank you for your attention and cooperation to this matter.

AWARD TO VENDOR(S):	RECOMMENDATION (Basis) (e.g. lowest bidder, met specification/requirements etc)
1. Unifirst Holdings	lowest bidder
2.	
3.	

Please include the budget account number(s) for the above reference project.

Budget Acct No.: 7-1100-421-00-280-001-0-340
7-1100-423-21-280-002-0-340

	Capt. Steve Herrera	Admin HLSO	5/4/17
AUTHORIZED SIGNATURE	PRINTED NAME	DEPARTMENT	DATE

Hidalgo County Purchasing Department
2812 S. Business Highway 281
Administration Building
Edinburg, Texas 78539
(956) 318-2626/ Fax: (956) 318-2629

MEMORANDUM

(Department's Recommendation)

RECEIVED
MAY 01 2017
By

TO: **ALL DEPARTMENT HEADS**

FROM: Sandra Montalvo, Buyer II
Hidalgo County Purchasing Department

DATE: **April 24, 2017**

RE: **BID AWARD RECOMMENDATION REQUEST**
Bid No. 2017-045-03-29-SMA-for HIDALGO COUNTY-*"Rental Industrial Uniforms"*

We have received **TWO (2) COMPLETE BID RESPONSES** to the above reference project. Enclosed you will find a copy of the tabulation sheet along with attachment A and questionnaire for your review and recommendation.

We would like to present your recommendation to Commissioner's Count Meeting; therefore, we need your response by no later **than** MAY 5, 2017 @ 10:00 a.m. to be able to present to Commissioner's Court.

Please indicate your recommendation or any concerns on the space provided below and return **via email to: sandra.montalvo@co.hidalgo.tx.us.**

Should you have any questions or require further information please do not hesitate to call me at 318-2626- ext. 4865. Thank you for your attention and cooperation to this matter.

AWARD TO VENDOR(S):	RECOMMENDATION (Basis) (e.g. lowest bidder, met specification/requirements etc)
1. Unifirst Holdings	lowest bidder
2.	
3.	

Please include the budget account number(s) for the above reference project.

PCT # 1
ROAD & BRIDGE
1-1200-431-00-121-005-0-340

PCT # 1
SANITATION
1-1100-432-00-121-001-0-340

Budget Acct No.: _____

PCT # 1
PARKS
1-1100-452-00-121-013-0-340

AUTHORIZED SIGNATURE	PRINTED NAME	DEPARTMENT	DATE
Amy S Smith	Amy Sainz-Smith	Pct 1	4/28/17

Hidalgo County Purchasing Department
2812 S. Business Highway 281
Administration Building
Edinburg, Texas 78539
(956) 318-2626/ Fax: (956) 318-2629

RECEIVED
MAY 04 2017
BY

MEMORANDUM

(Department's Recommendation)

TO: **ALL DEPARTMENT HEADS**

FROM: Sandra Montalvo, Buyer II
Hidalgo County Purchasing Department

DATE: **April 24, 2017**

RE: **BID AWARD RECOMMENDATION REQUEST**
Bid No. 2017-045-03-29-SMA-for HIDALGO COUNTY-*"Rental Industrial Uniforms"*

We have received TWO (2) COMPLETE BID RESPONSES to the above reference project. Enclosed you will find a copy of the tabulation sheet along with attachment A and questionnaire for your review and recommendation.

We would like to present your recommendation to Commissioner's Count Meeting; therefore, we need your response by no later **than** MAY 5, 2017 @ 10:00 a.m. to be able to present to Commissioner's Court.

Please indicate your recommendation or any concerns on the space provided below and return **via email to: sandra.montalvo@co.hidalgo.tx.us.**

Should you have any questions or require further information please do not hesitate to call me at 318-2626- ext. 4865. Thank you for your attention and cooperation to this matter.

AWARD TO VENDOR(S):	RECOMMENDATION (Basis) (e.g. lowest bidder, met specification/requirements etc)
1. Unifirst Holdings	Lowest Bid
2.	
3.	

Please include the budget account number(s) for the above reference project.

Budget Acct No.: 7-120-431-00-123-005-0-610 Flow mat, Pct 3 doesn't use rental services

	Joe M. Flores	Pct 3	5/4/17
AUTHORIZED SIGNATURE	PRINTED NAME	DEPARTMENT	DATE

Hidalgo County Purchasing Department
2812 S. Business Highway 281
Administration Building
Edinburg, Texas 78539
(956) 318-2626/ Fax: (956) 318-2629

MEMORANDUM

(Department's Recommendation)

RECEIVED
MAY 01 2017
By

TO: **ALL DEPARTMENT HEADS**

FROM: Sandra Montalvo, Buyer II
Hidalgo County Purchasing Department

DATE: **April 24, 2017**

RE: **BID AWARD RECOMMENDATION REQUEST**
Bid No. 2017-045-03-29-SMA-for HIDALGO COUNTY-*"Rental Industrial Uniforms"*

We have received TWO (2) COMPLETE BID RESPONSES to the above reference project. Enclosed you will find a copy of the tabulation sheet along with attachment A and questionnaire for your review and recommendation.

We would like to present your recommendation to Commissioner's Count Meeting; therefore, we need your response by no later **than** MAY 5, 2017 @ 10:00 a.m. to be able to present to Commissioner's Court.

Please indicate your recommendation or any concerns on the space provided below and return **via email to: sandra.montalvo@co.hidalgo.tx.us.**

Should you have any questions or require further information please do not hesitate to call me at 318-2626- ext. 4865. Thank you for your attention and cooperation to this matter.

AWARD TO VENDOR(S):	RECOMMENDATION (Basis) (e.g. lowest bidder, met specification/requirements etc)
1. UniFirst Holdings	lowest bidder
2.	
3.	

Please include the budget account number(s) for the above reference project.

Budget Acct No.: [redacted]
7-1100-419-40-220-001-0-340

AUTHORIZED SIGNATURE	PRINTED NAME	DEPARTMENT	DATE
	David Flores	220 Facilities	4/24/17

Hidalgo County Purchasing Department
2812 S. Business Highway 281
Administration Building
Edinburg, Texas 78539
(956) 318-2626/ Fax: (956) 318-2629

RECEIVED
MAY 03 2017
By

MEMORANDUM
(Department's Recommendation)

TO: **ALL DEPARTMENT HEADS**

FROM: Sandra Montalvo, Buyer II
Hidalgo County Purchasing Department

DATE: **April 24, 2017**

RE: **BID AWARD RECOMMENDATION REQUEST**
Bid No. 2017-045-03-29-SMA-for HIDALGO COUNTY-*"Rental Industrial Uniforms"*

We have received TWO (2) COMPLETE BID RESPONSES to the above reference project. Enclosed you will find a copy of the tabulation sheet along with attachment A and questionnaire for your review and recommendation.

We would like to present your recommendation to Commissioner's Count Meeting; therefore, we need your response by no later **than** MAY 5, 2017 @ 10:00 a.m. to be able to present to Commissioner's Court.

Please indicate your recommendation or any concerns on the space provided below and return **via email to: sandra.montalvo@co.hidalgo.tx.us.**

Should you have any questions or require further information please do not hesitate to call me at 318-2626- ext. 4865. Thank you for your attention and cooperation to this matter.

AWARD TO VENDOR(S):	RECOMMENDATION (Basis) (e.g. lowest bidder, met specification/requirements etc)
1. ~~Model Laundry~~	
2. Unifirst Holdings	lowest bidder
3.	

Please include the budget account number(s) for the above reference project.

Budget Acct No.: 7-1100-441-00-340-001-0-340

AUTHORIZED SIGNATURE	PRINTED NAME	DEPARTMENT	DATE
	Eduardo Olivarez	Health	5/2/17

HIDALGO COUNTY PURCHASING DEPARTMENT
PARTICIPATING BIDDER'S LOG

BID OPENING DATE: March 29, 2017 | **BID OPENING TIME: 9:30 A.M.**

DEPARTMENT/BID DESCRIPTION: HIDALGO COUNTY-*Rental of Industrial Uniforms*

BID NO.: 2017-045-03-29-SMA | **Buyer: Sandra Montalvo**

	NAME OF VENDOR COMPANY/FIRM	BID REQUEST *VIA	SIGNATURE (IF APPLICABLE) OR INITIALS OF STAFF	DATE	MAILING ADDRESS, PHONE No & E-MAIL ADDRESS
1.	**UNIFIRST UNIFORMS** **Andres Hernandez**	BLM	Andres_hernandez@unifirst.com YZV	03/13/17	TEL: 956-686-0218
2.	**MODEL LAUNDRY** **William Putegnat**	BLM	putegnat@modellaundryservices.com YZV	03/13/17	35448 FM 2520 San Benito, TX 78586 TEL:956-399-4340
3.	**G & K Services** **Jorge Islas**	BLM	jislasur@gkservices.com YZV	03/13/17	PENDING REQUESTED CONTACT INFO. TEL: 408-0308 OR 367-0838
4.	**Prime Vendor Inc.** **Bretta Rundhammer**	EM	Bids20@prime-vendor.com YZV	03/14/17	4622 Cedar Ave Bldg 5 Ste 124 Wilmington NC 28403 Tel: 800-746-9554
5.	**Onvia** **Jacqueline Sessa**	EM	jsessa@onvia.com YZV	03/15/17	509 Olive Way Seattle WA 98101 Tel: 206-373-9150
6.	**Cintas Corporation** **Roger Rodriguez, Jr.**	BLM	rodriguezr@cintas.com YZV	03/17/17	700 Dawson Rd. Mercedes, TX 78570 Tel: 565-9996 Cell: 956-536-9641
7.					
8.					
9.					
10.					

***VIA:**
IN PERSON (IP)
TELEPHONE REQUEST (TR)
BIDDER LIST MAIL OUT (BLM)
E-MAIL REQUEST (EMR)

HIDALGO COUNTY PURCHASING DEPARTMENT
ACCEPTANCE SHEET

DEPARTMENT NAME/ DESCRIPTION OF BID: ***Hidalgo County- Rental Industrial Uniforms***

BID OPENING DATE: ~~*March 29, 2017*~~ *Extended as per Addendum 1 dated 03-24-2017-* ***APRIL 12, 2017***	**BID OPENING TIME: 9:30 A.M.**
BID NO: 2017-045-03-29-SMA	**BUYER: SANDRA MONTALVO**

NAME OF COMPANY	ACKNOWLEDGEMENT RECEIPT	ADDENDUM NO. 1
1) UNIFIRST HOLDINGS	√	√
2) MODEL LAUNDRY, LLC	√	√
3)		
4)		
5)		
6)		

HIDALGO COUNTY PURCHASING DEPARTMENT TABULATION SHEET

DESCRIPTION OF BID: Hidalgo County -***RENTAL of INDUSTRIAL UNIFORMS***

BID NO: 2017-045-03-29-SMA

BID OPENING DATE~~: March 29~~, 2017 @ 9:30 A.M extended APRIL 12, 2017

BUYER: Sandra Montalvo

PARTICIPATING VENDORS

	ITEM DESCRIPTION		UNIFIRST HOLDINGS			MODEL LAUNDRY, LLC		
			OPTION 1 *Full Service* Weekly rate rental per employee	**OPTION 2** *Value Lease* Weekly rate per employee	**Price For Lost Garment**	**OPTION 1** *Full Service* Weekly rate rental per employee	**OPTION 2** *Value Lease* Weekly rate per employee	**Price For Lost Garment**
1.	**SHIRTS**- Industrial (Men & Women) 65% Polyester 35% Cotton	Long sleeve	$1.54	$.84	$12.00	$3.82	$2.45	$16.00
		Short sleeve	$1.54	$.84	$12.00	$3.67	$2.20	$16.00
2.	**SHIRTS**- Industrial (Men & Women) 100% cotton	Long sleeve	$2.46	$1.35	$13.00	$5.74	$3.39	$18.00
		Short sleeve	$2.46	$1.35	$13.00	$5.50	$3.00	$18.00
3.	**SHIRTS**- Industrial (Men & Women) Reflective & Fluorescent Green Stripes on the sleeves, Front pockets & back of the Shirt 65% Polyester 35% Cotton	Long sleeve	$3.26	$1.78	$16.00	$8.82	$5.55	$35.00
		Short sleeve	$3.26	$1.78	$16.00	$8.82	$5.33	$35.00
4.	**SHIRTS**- Industrial (Men & Women) Reflective & Fluorescent Green Stripes on the sleeves, Front pockets & back of the Shirt 100% Polyester	Long sleeve	$3.52	$1.92	$35.00	NO BID		
		Short sleeve	$3.52	$1.92	$35.00			
5.	**SHIRTS**- (Men & Women) **High-Visibility (ansi-complaint) Class 3 work shirt** Reflective striping on the sleeves & body, button-chest pockets with pencil stall, stain release and moisture control, ANSI/SEA 107-2010 class 3 certified, 100 polyester poplin	Long sleeve	$3.52	$1.92	$35.00	$25.82	$14.28	$75.00
		Short sleeve	$3.52	$1.92	$35.00	$25.82	$14.28	$75.00
6.	**SHIRTS**- **Executive Style (Men)** 65% Polyester 35% Cotton		$2.37	$1.32	$13.00	$4.78	$3.43	$20.00
7.	**POLO SHIRTS (men & women)** 50% Polyester 50% Cotton		N/A	N/A		$4.78	$3.43	$20.00
8.	**POLO SHIRTS (men & women)** 100% Polyester		$2.37	$1.32	$13.00	$4.78	$3.43	$20.00
9.	**SHORT SLEEVE SMOCK (women)** 80 % Polyester 20% Cotton poplin		$1.54	$.84	$12.00	$4.78	$3.43	$20.00
10.	**TROUSERS-Industrial (men)** 65% Polyester 35% Cotton		$2.20	$1.20	$13.90	$3.91	$2.45	$18.00
11.	**TROUSERS**-INDUSTRIAL (WOMEN) 65% Polyester 35% Cotton		$2.20	$1.20	$13.90	$4.90	$2.84	$18.00
12.	**EXECUTIVE PANTS (**Men) *must be available for Supervisory positions as requested by dept. 65% Polyester 35% Cotton		$2.53	$1.38	$15.00	$5.39	$3.43	$25.00
13.	**PANTS-(MEN)** 100% rip stop cotton pants military-grade heavyweight 10-oz		N/A	N/A		NO BID		
14.	**PANTS**-Performance Shop 54% polyester, 42% cotton, 2% spandex		N/A	N/A		$9.35	$5.10	$38.00

15.	**DENIM BLUE JEANS-** 100% Cotton- **(MEN)** (Boot Cut, Flare & Straight Leg)13.75oz-14 oz. Denim	$2.86	$1.56	$16.00	$4.81	$2.90	$18.00
16.	**SHORTS**- Uniform (Men) 65% Polyester/35% Cotton	$2.20	$1.20	$13.00	$5.10	$3.02	$18.00
17.	**SHORTS**- Uniform (Women) 65% Polyester/35% Cotton	$2.20	$1.20	$13.00	$5.10	$3.02	$18.00
18.	**COVERALLS-** 65% Polyester 35% Cotton	$3.30	$1.80	$18.00	$7.77	$3.28	$30.00
19.	**PATCHES AND/OR LOGO**s-- one time charge for Shirt	$1.00	$1.00		$1.47	$1.47	N/A
20.	**ADDITIONAL FEES** (if any):	Preparation fee			All emblems are sewn to the shirts		
		$1.00	$1.00				

EXIBIT- A QUESTIONAIRE	**UNIFIRST HOLDING, INC. McAllen, TX (vendors response)**	**MODEL LAUDRY, LLC LOS INDIOS, TX (vendors response)**
1) Is there a fee for returned uniforms upon termination or resignation of an employee? If so, what is your fee and how long must an employee lease a uniform without paying termination charges?	No fee unless uniforms are not returned. Lost uniforms will be billed at regular prices	NO
2) Will your company be capable of depicting actual charges?	YES	YES
3) Will your company furnish coveralls, free of charge, with the rental of uniforms? If so, how many?	NO COVERALLS	NO
4) If contract is awarded to your company, the prices will be in effect for the length of the contract.	YES	YES
5) Please list any warranties and any other policies not described in Attachment A.	See vendors questionnaire attached & attachment A	See vendors questionnaire attached & attachment A
6) References submitted	YES	YES

CERTIFICATE OF INTERESTED PARTIES

FORM 1295

Complete Nos. 1 - 4 and 6 if there are interested parties.
Complete Nos. 1, 2, 3, 5, and 6 if there are no interested parties.

OFFICE USE ONLY
CERTIFICATION OF FILING

Certificate Number:
2017-199712

Date Filed:
04/28/2017

Date Acknowledged:

1 Name of business entity filing form, and the city, state and country of the business entity's place of business.
Unifirst Holdings Inc.
McAllen, TX United States

2 Name of governmental entity or state agency that is a party to the contract for which the form is being filed.
Hidalgo County

3 Provide the identification number used by the governmental entity or state agency to track or identify the contract, and provide a description of the services, goods, or other property to be provided under the contract.
BID NO 2017-045-03-29-SMA
Hidalgo County-Rental of Industrial Uniforms

4 Name of Interested Party	City, State, Country (place of business)	Nature of interest (check applicable)	
		Controlling	Intermediary
UNIFIRST HOLDINGS INC	McallenMcallen, TX United States	X	

5 Check only if there is NO Interested Party. ☐

6 AFFIDAVIT

I swear, or affirm, under penalty of perjury, that the above disclosure is true and correct.

ESMERALDA RODRIGUEZ
Notary Public
STATE OF TEXAS
My Comm. Exp. 03-13-18

AFFIX NOTARY STAMP / SEAL ABOVE

Signature of authorized agent of contracting business entity

Sworn to and subscribed before me, by the said Edgar Segovia, this the 28 day of April, 2017, to certify which, witness my hand and seal of office.

Signature of officer administering oath — Esmeralda Rodriguez — Financial Manager

Printed name of officer administering oath — Title of officer administering oath

CERTIFICATE OF INTERESTED PARTIES

FORM 1295

Complete Nos. 1 - 4 and 6 if there are interested parties.
Complete Nos. 1, 2, 3, 5, and 6 if there are no interested parties.

OFFICE USE ONLY
CERTIFICATION OF FILING

Certificate Number:
2017-199712

Date Filed:
04/28/2017

Date Acknowledged:
05/01/2017

1 Name of business entity filing form, and the city, state and country of the business entity's place of business.

Unifirst Holdings Inc.
McAllen, TX United States

2 Name of governmental entity or state agency that is a party to the contract for which the form is being filed.

Hidalgo County

3 Provide the identification number used by the governmental entity or state agency to track or identify the contract, and provide a description of the services, goods, or other property to be provided under the contract.

BID NO 2017-045-03-29-SMA
Hidalgo County-Rental of Industrial Uniforms

4 Name of Interested Party	City, State, Country (place of business)	Nature of interest (check applicable)	
		Controlling	Intermediary
UNIFIRST HOLDINGS INC	McallenMcallen, TX United States	X	

5 Check only if there is NO Interested Party. ☐

6 AFFIDAVIT

I swear, or affirm, under penalty of perjury, that the above disclosure is true and correct.

_____
Signature of authorized agent of contracting business entity

AFFIX NOTARY STAMP / SEAL ABOVE

Sworn to and subscribed before me, by the said _____, this the _____ day of _____, 20_____, to certify which, witness my hand and seal of office.

_____ _____ _____
Signature of officer administering oath | Printed name of officer administering oath | Title of officer administering oath

Zimbra **leticia.saenz@co.hidalgo.tx.us**

RE: Review and Approve as to form - C-17-045-05-30- Unifirst Holdings Inc - HC (Rental of Uniforms)

From : Steve Crain <scrain@atlashall.com> Mon, May 08, 2017 02:42 PM

Subject : RE: Review and Approve as to form - C-17-045-05-30- Unifirst Holdings Inc - HC (Rental of Uniforms) 1 attachment

To : 'Leticia H. Saenz' <leticia.saenz@co.hidalgo.tx.us>

Looks good.

From: Leticia H. Saenz [mailto:leticia.saenz@co.hidalgo.tx.us]
Sent: Monday, May 08, 2017 2:01 PM
To: Steve Crain <scrain@atlashall.com>
Cc: Marynel Trevino <mntrevino@atlashall.com>
Subject: Re: Review and Approve as to form - C-17-045-05-30- Unifirst Holdings Inc - HC (Rental of Uniforms)

Good afternoon, Mr. Crain-

Please review and approve as to form agreement (attached hereto) with COI now **including confirmation** of Unifirst as "subsidiary".

Please advise.

Respectfully,

Leticia H. Saenz, CPPB/Contracts Manager
Hidalgo County Purchasing Department
2812 South Business Highway 281
Edinburg, Texas 78539
P(956) 318-2626 **F**(956) 318-2629
Email: leticia.saenz@co.hidalgo.tx.us

...DON'T WORRY...BE HAPPY...

From: "Steve Crain" <scrain@atlashall.com>
To: "Leticia H. Saenz" <leticia.saenz@co.hidalgo.tx.us>
Sent: Friday, May 5, 2017 3:13:03 PM
Subject: RE: Review and Approve as to form - C-17-045-05-30- Unifirst Holdings Inc - HC (Rental of Uniforms)

We need something on the insurance confirming tne contracted party is a subsidiary of the insured named on the Certificte.

From: Leticia H. Saenz [mailto:leticia.saenz@co.hidalgo.tx.us]
Sent: Friday, May 05, 2017 3:06 PM
To: Steve Crain <scrain@atlashall.com>
Cc: Marynel Trevino <mntrevino@atlashall.com>
Subject: Re: Review and Approve as to form - C-17-045-05-30- Unifirst Holdings Inc - HC (Rental of Uniforms)

Mr. Crain-

Will the insurance attached work for this agreement?

Please advise.

Thanks.

Leticia H. Saenz, CPPB/Contracts Manager
Hidalgo County Purchasing Department
2812 South Business Highway 281
Edinburg, Texas 78539
P(956) 318-2626 **F**(956) 318-2629
Email: leticia.saenz@co.hidalgo.tx.us

...DON'T WORRY...BE HAPPY...

From: "Steve Crain" <scrain@atlashall.com>
To: "Leticia H. Saenz" <leticia.saenz@co.hidalgo.tx.us>
Sent: Thursday, May 4, 2017 5:00:34 PM
Subject: RE: Review and Approve as to form - C-17-045-05-30- Unifirst Holdings Inc - HC (Rental of Uniforms)

We need to confirm that Unifirst Holdings is a subsidiary of Unifirst Corporation.

From: Leticia H. Saenz [mailto:leticia.saenz@co.hidalgo.tx.us]
Sent: Thursday, May 04, 2017 2:42 PM
To: Steve Crain <scrain@atlashall.com>
Cc: Marynel Trevino <mntrevino@atlashall.com>; Sandra Montalvo <sandra.montalvo@co.hidalgo.tx.us>; Darlene H. Betancourt <darlene.betancourt@co.hidalgo.tx.us>
Subject: Review and Approve as to form - C-17-045-05-30- Unifirst Holdings Inc - HC (Rental of Uniforms)

Mr. Crain-

Please review and approve as to form agreement (attached hereto) for the purpose of award of bid/contract with **Unifirst Holdings, Inc**. for: "**Rental of Industrial Uniforms"** for **Hidalgo County** (on an as needed basis).

Note: will be placed on the next CC of 05/30/16.

Please advise.

Respectfully,

Leticia H. Saenz, CPPB/Contracts Manager
Hidalgo County Purchasing Department
2812 South Business Highway 281
Edinburg, Texas 78539
P(956) 318-2626 **F**(956) 318-2629
Email: leticia.saenz@co.hidalgo.tx.us

...DON'T WORRY...BE HAPPY...

---

image001.jpg
825 B

THE STATE OF TEXAS §
§
COUNTY OF HIDALGO §

SERVICE CONTRACT
C-17-045-05-30

THIS CONTRACT is made and entered into this **30th** day of **MAY, 2017** by and between the **County of Hidalgo, Texas** ("County") and **UNIFIRST HOLDINGS, INC.** ("Company").

WHEREAS, Company responded to notices for Request for Sealed Bids (RFB) for: **RENTAL OF INDUSTRIAL UNIFORMS (on an as needed basis)** for **HIDALGO COUNTY** (the "Services"); and

WHEREAS, Company submitted a sealed quote to provide services in accordance with Exhibit "A" Request for Sealed Bids (RFB) Procurement Packet attached hereto respectively, and incorporated herein for all purposes of (the "RFB"); and;

WHEREAS, in recognition of and in consideration of Company's agreement to perform the Services in accordance with Specifications within Exhibit "A" Request for Sealed Bids (RFB) Procurement Packet, the Commissioners Court of County awarded the sealed quote to Company.

NOW, THEREFORE, in mutual consideration of the foregoing and the further consideration of the following, the parties hereto agree as follows:

1. County and Company hereby agrees that this Contract is entered into in order to provide the Services to **Hidalgo County**. This Contract does not extend to any third parties any duties or benefits conferred in any manner hereunder or otherwise.

2. Company hereby promises and agrees to render and provide, during the term of this Contract, and shall be obligated to render and provide the services in accordance with the Specifications contained in Exhibit "A" Request for Sealed Bids (RFB) Procurement Packet within

Hidalgo County following a request for Services by designee(s) of **Hidalgo Countywide Departments**. Company agrees in performing the Services that it will use proper professional standards, comply with any and all appropriate laws and regulations in providing the Services, and devote such time as is necessary to safely and efficiently provide the Services. Further Hidalgo County reserves the right to request these services from other sources other than the successful vendor and shall not be in violation of any terms or conditions of said contract.

3. This Contract shall be for a period of **two (2) years**, commencing on **JUNE 30, 2017** and expiring on **JUNE 29, 2019** and may be extended at the sole discretion of the County for an additional one (1) year term under the same rates, terms and conditions. Hidalgo County also reserves the right to continue this sealed quote for an additional sixty (60) day grace period at the end of the contract term for unforeseen delay of award for the next term and contingent upon cost remaining unchanged.

4. As a condition of this Contract, Company shall hold and maintain throughout the term of this Contract all licenses and permits required, or which may be required by any authority during the term hereof to provide the Services.

5. All trucks or vehicles operated by the Company to perform the Services shall contain all equipment required by any authority to operate on streets and roads and all persons in the employ of Company who operate such trucks or vehicles shall have the required licenses, qualifications, skill and expertise to perform such Services and shall comply with all laws, rules and regulations prescribed by any agency or authority having jurisdiction with regard to the operation of such trucks or vehicles in providing the Services.

6. As consideration for rendering the Service provided for in this Contract, the County agrees to pay Company the amounts specified in Exhibit "B" attached hereto payable against written

invoice submitted by Company.

7. Company shall provide insurance in force on all its vehicles and all persons connected with providing services under this Contract naming County as an additional insured (with the coverages and in the amounts described on Exhibit "C" attached hereto and incorporated herein at this point for all purposes), and shall furnish to County certificates of such insurance coverage.

8. Company shall provide a sufficient number of trucks, vehicles, personnel and equipment available to safely and efficiently provide the Services.

9. Company shall indemnify and hold harmless County, its elected officials, employees and agents from any and all claims, damages, losses, and expenses including attorney's fees for the defense of any action against County arising out of, resulting from, or connected with the provision of the Service by Company under this Contract. Said indemnity shall cover any act or failure to act by the Company, its agents or employees.

10. This Contract shall not be assignable in whole or in part by either party without prior written consent of the other party.

11. It is expressly agreed that this Contract and the performance by the parties hereunder does not create any agency relationship or master-servant relationship that County has no supervision of the performance of the Services provided by Company, and that Company is an independent contractor under this Contract.

12. Any notice required or permitted to be given hereunder shall be in writing and shall be delivered personally or sent by certified mail, postage prepaid, as set forth below:

If to County: County of Hidalgo
Attn: County Judge
302 West University Drive
Edinburg, Texas 78539

If to Company: **Unifirst Holdings, Inc.**
Attn: Edgar Segovia, District Service Manager
515 E. Beech Avenue
McAllen, Texas 78501

13. In case any one or more of the provisions contained in this Agreement shall for any reason be held to be invalid, illegal or unenforceable in any respect, such invalidity, illegality, or unenforceability shall not affect any other provision thereof and this Agreement shall be construed as if such invalid, illegal, or unenforceable provision had never been contained herein.

14. This Agreement may be terminated by County without cause upon thirty (30) days written notice.

15. This Agreement shall be binding upon and inure to the benefit of and be enforceable by the parties hereto and their respective heirs, executors, administrators, legal representatives, successors, and assigns where permitted by this Agreement.

16. This Agreement shall be governed by and construed in accordance with the laws of the State of Texas and shall be performable in Hidalgo County.

17. **Commitment of Current Revenues Only**. In the event that, during any term hereof, the Commissioners Court does not appropriate sufficient funds to meet the obligations of County under this Agreement, County may terminate this Agreement upon ninety (90) days written notice to Company. County agrees, however, to use reasonable efforts to secure funds necessary for the continued performance of this Agreement. The parties intend this provision to be a continuing right to terminate this Agreement at the expiration of each budget period of County pursuant to the provisions of Tex. Loc. Govt. Code Ann. ' 271.903 (Vernon Supp. 1996).

18. **Entire Agreement**. This Agreement contains the entire contract between the parties hereto, and each party acknowledges that neither has made (either directly or through any agent or representative) any representation or agreement in connection with this Agreement not specifically set forth herein. This Agreement may be modified or amended only by agreement in writing executed by the parties hereto, and not otherwise.

19. **Immunities.** Nothing in this Agreement is intended to and County does not hereby waive, release or relinquish any right to assert any of the defenses County enjoys by virtue of the state or federal constitution, laws, rules or regulations, and any sovereign, official or qualified immunity available to County as to any claim or action of any person, entity, or individual against County.

WITNESS our hands in duplicate originals this ____day of _____, 2017.

APPROVED AS TO FORM
Atlas, Hall & Rodriguez, L.L.P.

By:_____
Stephen L. Crain, Attorney

COUNTY OF HIDALGO

ATTEST:

By: _____
Ramon Garcia, County Judge

By: _____
Arturo Guajardo, Jr., County Clerk

COMPANY: UNIFIRST HOLDINGS, INC.

By:_____
Printed Name: Edgar Segovia
Title: District Service Manager

EXHIBIT "A"

REQUEST FOR SEALED BIDS (RFB) PROCUREMENT PACKET

Hidalgo County Purchasing Office
2812 S. Business Highway 281
Administration Building
Edinburg, Texas 78539
(956) 318-2626/ Fax: (956) 292-7612

March 13, 2017

Bidder's name

Address

City

State, Zip Code

Re: **HIDALGO COUNTY-**
Request for Bids -***"RENTAL OF INDUSTRIAL UNIFORMS"***
RFB Bid No: 2017-045-03-29-SMA

Dear Gentleman/Ladies:

Enclosed, please find the Request for Bids (RFB) packet. **Modifications and new requirements** have been added and implemented. Carefully read and review all instructions, Legal Notice, Requirements and/or Specifications.

Hidalgo County Purchasing Department welcomes and appreciates your participation in the Request for Bids process.

If any further assistance is required, please do not hesitate to call the Purchasing Department 956/318-2626 x 4865.

Sincerely,

Martha L. Salazar

Martha L. Salazar, CPPB
Hidalgo County Purchasing Agent

MLS/sma
Enclosures

HIDALGO COUNTY PURCHASING OFFICE
2812 S. Business Highway 281
Administration Building
Edinburg, Texas 78539
(956) 318-2626/ Fax: (956) 292-7612

TABLE OF CONTENTS
REQUEST FOR BIDS (RFB)

Hidalgo County
"RENTAL OF INDUSTRIAL UNIFORMS"
RFB No.: 2017-045-03-29-SMA

ITEM	DESCRIPTION	NO. OF PAGES
1.	Request For Bid Letter	1
2.	Request for Bid, **Legal Notice**	8
3.	**EXHIBIT A,** Specifications/Requirements	9
4.	**EXHIBIT B,** Bid Page	2
5.	**EXHIBIT C,** Insurance Requirements	4
6.	**EXHIBIT D,** (CIQ) Conflict of Interest Questionnaire (if applicable)	2
7.	**EXHIBIT E,** Vendor/Bidder Application and W-9 form(s)	6
8.	**EXHIBIT F,** Certification Regarding Debarment	1
9.	**EXHIBIT G,** Title VI Appendices "A" through "E"	4
10.	**Draft Service Contract**	**10**
11.	RFB Submittal Checklist	1

The above mentioned items shall be found in this Request for Bids-Goods/Products-RFB packet that is attached herewith. Should you find that any of the listed items are not attached in its entirety, please contact Purchasing by calling (956) 318-2626 or e-mail, to advise us of the missing documentation, and Purchasing will forward information either through facsimile, e-mail or by U.S. Mail.

Thank you.

Martha L Salazar
Martha L. Salazar, CPPB, Purchasing Agent

March 13, 2017
Date

Revised 09/13/16

Bid No: 2017-045 -03-29-SMA	Buyer: Sandra Montalvo	Tel. No: (956) 318-2626 ext. 4865

REQUEST FOR BIDS

Hidalgo County

"RENTAL OF INDUSTRIAL OF UNIFORMS"

RFB No.: 2017-045-03-29-SMA

BID OPENING DATE: March 29, 2017

Contact Person:

Martha L. Salazar, CPPB, Purchasing Agent
Hidalgo County Purchasing Department
Physical Address: 2802 S. Business Hwy. 281 - Administration Building
Mailing/Postal Address: 2812 S. Business Hwy. 281
Edinburg, Texas 78539
956 318-2626

Form HCPD-03

1) Sealed bids will be received for **"Hidalgo County-"RENTAL OF INDUSTRIAL OF UNIFORMS"** in accordance with the specifications attached as **Exhibit "A"** hereto. Bids should address all specifications set forth. Bidders may suggest substitutions of features which they feel would be in the best interest of Hidalgo County ("County"). Strong rationale must be presented for any deviation from the specifications. Hidalgo County reserves the right to reject the deviation and its effect on the overall bid.

2) **One (1) original and Three (3) copies** of all bids are required with the bidders name and return address clearly typed and or/printed on upper left hand corner and the proper notation clearly typed/printed on the lower left hand corner of the envelope and/or package: **RFB No.: 2017-045-03-29-SMA-Hidalgo County-"RENTAL OF INDUSTRIAL OF UNIFORMS"** and at County's Purchasing Department with a physical address: 2802 S. Business 281 and a mailing address: 2812 S. Business Hwy 281, Administration Building, Edinburg, Texas**, on or before 9:30 A.M, WEDNESDAY, March 29, 2017.**

NO FACSIMILES, EMAILS OR LATE ARRIVALS WILL BE ACCEPTED. ANY RFB RECEIVED AFTER THAT TIME WILL NOT BE OPENED AND WILL BE RETURNED. OVERNIGHT MAIL MUST ALSO BE PROPERLY LABELED ON THE OUTSIDE OF EXPRESS ENVELOPE OR PACKAGE WITH REFERENCE TO Hidalgo County-*"RENTAL OF INDUSTRIAL OF UNIFORMS".*

Hidalgo County reserves the right to refuse and reject any/all bids and to waive any/all formalities or technicalities, or to accept the bids considered the best and most advantageous to Hidalgo County.

Additionally, all forms listed below must be properly executed and included with your bid:

a) Legal Notice (See page 8);
b) Bid Page (See **Exhibit "B"**);
c) Insurance pages with Acknowledgment Forms (See **Exhibit "C"**);
d) Form CIQ-Conflict of Interest Questionnaire (See **Exhibit "D"**);
e) Vendor Bidder Application & W-9 forms (See **Exhibit "E"**);
f) Certification Regarding Debarment (See **Exhibit "F"**); and
g) SAMS.gov Registration Acknowledgement (**See #18** below).

3) Hidalgo County reserves the right to: A. separate and accept, or eliminate any item(s) listed under this bid that it deems necessary to accommodate budgetary and/or operational requirements; B. reject any or all bids submitted and further reserves the right to design the evaluation criteria to be used in selecting the lowest and best bid for approval; C. award the bid to one bidder or to multiple bidders if the County determines it is in its best interest to do so; D. award the contract to the responsible bidder who submits the lowest and best bid. "Lowest and best" means a bid or offer providing the best value considering associated direct and indirect costs, including transport, maintenance, reliability, life cycle, warranties, and customer service after a sale.

4) The Bidder shall not substitute items named in the bid without the express written consent of Hidalgo County. Failure of the delivered item to perform as specified or failure to meet the stated delivery schedule shall release Hidalgo County from all obligations to the contracting party with regard to the item(s) in question. In such event, County may elect to award the contract to the next-lowest responsible bidder, or to reject all bids and re-advertise.

5) For work to be performed at a County owned or operated location, each bidder shall, in its sole discretion, visit the job site before preparing the bid and thoroughly familiarize himself/herself with existing

conditions. Bidder should take field dimensions and note all circumstances which affect the dollar amount of the bid.

6) Descriptive specifications are referenced in this document to indicate the general kind and quality of equipment desired by Hidalgo County. Due to various styles and models of equipment, bidders are required to include illustrations, specifications, explanation of warranties, and service data with their bid including catalogue numbers and any necessary references.

7) No bid may be withdrawn within thirty (30) days from the scheduled time to open bids.

8) Proposed prices are to remain firm for a minimum of ninety (90) days after bid opening.

9) Any interpretations, amendments, corrections or changes to this bid document must be in a written addendum and signed by the County Judge or his designee. Addenda will be mailed to all who are known to have received a copy of the Request for Bids. Bidders shall acknowledge receipt of all addenda as a part of their bid.

10) County reserves the right to accept or reject any or all Bids.

11) Costs are to be net F.O.B., County Prepaid.

12) County is exempt from Federal Excise Tax, State Tax and Local Tax. Do Not include tax in cost figure. If it is determined that tax was included in the cost figures it will not be included in the tabulation of any awards. Tax exemption certificates will be furnished upon request.

13) Funds for this procurement have been provided through the County budget for this fiscal year only. County, on an annual basis, has the right to reconsider a contract during the budget process for ensuing years if financial resources of County are insufficient to meet the liabilities of said contract. The award of a bid or contract hereunder will not be construed to create a debt of the County which is payable out of funds beyond the current fiscal year.

14) Upon award and prior to execution of a contract, Sole Proprietorships are required to submit a copy of their social security cards to the Hidalgo County Auditor's Office in order to establish an account with the County. All awarded vendors must submit a completed W-9 and a copy of their Federal ID Number Certificate.

15) **DELIVERY INSTRUCTIONS:**

- No deliveries accepted after 3:00 P.M., Monday-Friday.
- At least seventy two (72) hours prior notice of delivery must be given to Martha L. Salazar, Purchasing Agent before delivery will be accepted.
- If you need additional information call the office listed below:

Hidalgo County Purchasing Department
Martha L. Salazar, Purchasing Agent
(956) 318-2626

16) BILLING AND PAYMENT INSTRUCTIONS:

- Invoices must include:
  a) Name and address of successful bidder
  b) Name and address of receiving department or official
  c) Purchase Order Number (if any)
  d) Notation- **Hidalgo County Sheriff's Office-*"RENTAL OF INDUSTRIAL OF UNIFORMS"*-** RFB NO.: **2017-045-03-29-SMA** Descriptive information as to the items or services delivered, including product code, item number, quantity, etc.
  e) Contract number must be indicated on all invoices

- Discount payments will be considered when offered.
- Contact person for Billing and Payment questions:

Hidalgo County Auditor's Office
2808 S. Bus. Hwy 281
Edinburg, Texas 78539
Attn: Elizabeth Cano
956-318-2511

17) SCHEDULE OF EVENTS:

Bid Opening, 9:30 A.M.	March 29, 2017
Award of Contract	____ ____, 2017
Commence Work or Deliver Products	_____, 2017

~~18) BID OR PERFORMANCE BOND~~ AND DEBARMENT CERTIFICATION; ~~PAYMENT UNDER CONTRACT :~~

- If the contract proposed is for the construction of public works or is for a contract for goods & services exceeding $100,000, all bidders shall furnish a good and sufficient bid bond in the amount of five percent of the total contract price. A bid bond must be executed with a surety company authorized to do business in Texas. All bidders are also required to furnish a certification or acknowledgment stating that the contractor or vendor is free from suspension or debarment pursuant to federal regulation 45CFR Part 76. Register at SAMs System for Award Management @ **www.sam.gov.**

- Together with the signing of a contract or issuance of a purchase order following the acceptance of a bid, and prior to commencement of the actual work, the bidder shall furnish a performance bond to the County for the full amount of the contract, if that contract exceeds $50,000.

- If the contract is for $50,000 or less, no money will be paid to the contractor until completion and acceptance of the work or the fulfillment of the purchase obligation to the County, and, if applicable, the receipt by County of satisfactory evidence that all subcontractors and material men have been paid.

- If a contract is for the construction, alteration or repair of public buildings or public works, the contractor *shall* provide a payment bond for a contract in excess of Twenty Five Thousand Dollars ($25,000.00), as required by Tex. Govt. Code Ch. 2253.

- For requirements contracts, bond requirements are determined by applying the proposed unit price to the estimated quantities included in the specifications.

19) TITLE VI NOTICE/ NONDISCRIMATION

a) The County of Hidalgo, in accordance with the provisions of Title VI of the Civil Rights Act of 1964 (78 Stat.252, 42 U.S.C. §§2000d to 2000d-4) and the Regulations, hereby notifies all bidders that it will affirmatively ensure that any contract entered into pursuant to this advertisement, disadvantaged business enterprises will be afforded full and fair opportunity to submit bids in response to this invitation and will not be discriminated against on the grounds of race, color, or national origin in consideration for an award."

b) The appropriate clauses of Appendices "A" through "E" as delineated in the USDOT Standard Title VI/Nondiscrimination Assurances-Specific Assurances are hereby incorporated by reference as applicable. Title VI Appendices "A" through "E" are attached as **Exhibit "G.**

c) Bidder will attach all applicable notices to which it is obligated to provide or submit as part of the bid, including Form FHWA 1273 to be submitted by all contractors and subcontractors in relation to construction contracts.

20) ETHICAL STANDARDS:

- It shall be a breach of ethics to offer, give or agree to give any elected official, department head or employee, or former elected official, department head or employee, of the County, or for any elected official, department head or employee or former elected official, department head or employee of the County, to solicit, demand, accept or agree to accept from another person, entity or organization, a gratuity or an offer of employment in connection with any decision, approval, disapproval, recommendation, preparation or any part of a program requirement or purchase request, influencing the content of any specification or procurement standard, rendering of advice, investigation, auditing, or in any other advisory capacity in any proceeding or application, request for ruling, determination, claim or controversy, or other particular matter pertaining to any program requirement or a contract or subcontract, or to any solicitation or proposal therefore pending before any department or agency of the County.

- It shall be a breach of ethics for any payment, gratuity or offer of employment to be made by or on behalf of a subcontractor under a contract to the prime contractor or higher tier subcontractor for any contract for the County, or any person associated therewith, as an inducement for the award of a subcontract or order.

- No public official shall have an interest in a contract awarded hereunder except in accordance with Tex. Loc. Govt. Code Chapter 171.

NOTICE:
ALL COMMUNICATIONS BY A VENDOR TO THE COUNTY, ITS OFFICIALS, AND DEPARTMENT HEADS REGARDING THIS PROCUREMENT SHALL BE DONE THROUGH THE HIDALGO COUNTY PURCHASING DEPARTMENT.

21) DISCLOSURE OF CONFLICT OF INTEREST

- Effective January 1, 2016, Chapter 176 of the Texas Local Government Code requires that any vendor, person, consultant or contractor considering doing business with Hidalgo County ("the County") to disclose in the Conflict of Interest Questionnaire (the "CIQ") attached as **Exhibit D,** the vendor, person, consultant or contractor's affiliation or business relationship that might cause a conflict of interest with the County. By law, the CIQ must be filed with the Hidalgo County Clerk's Office no later than the seventh business day after the date the person becomes aware of facts that require that statement to be

filed. The disclosure requirement applies to a person or business that contracts or seeks to contract with Hidalgo County for the sale or purchase of property, goods or service. Any purchase order or contract resulting from this process shall be considered null and void if the successful bidder fails to comply with Texas Local Government Code Chapter 176. Vendors, consultants, contractors and others who desire to conduct business with Hidalgo County are encouraged to refer to Texas Local Government Code Chapter 176 for the details of this law. An offense under Texas Local Government Code Chapter 176 is a Class C Misdemeanor.

Completed Form CIQ must be submitted to the Hidalgo County Clerk's Office located at 100 N. Closner, Edinburg, Texas 78539 - Hidalgo County Courthouse.

COMPLETION AND SUBMISSION OF FORM CIQ IS THE SOLE RESPONSIBILITY OF THE PROSPECTIVE RESPONDENT. QUESTIONS REGARDING COMPLIANCE SHOULD BE DIRECTED TO YOUR LEGAL COUNSEL.

22) CERTIFICATE OF INTERESTED PARTIES (FORM HB1295)

- As of January 1, 2016, to comply with Texas Government Code Section §2252.908, and the rules issued by the Texas Ethics Commission found in Title 1, Section 46.1, 46.3 and 46.5 of the Texas Administrative Code, we have updated and revised our RFB packet. In accordance with these requirements, business must submit a completed Certificate of Interested Parties Form 1295 to the County before the County may enter into a contract with the business entity. In box 3 of Form 1295, you will provide the **RFB Project No. (2017-045),** as shown on the packet. Once completed and filed with the Texas Ethics Commission, Form 1295 must be printed and signed in the presence of a notary and submitted to our office via email to: sandra.montalvo@co.hidalgo.tx.us. Hidalgo County cannot enter into a contract until Form 1295 is submitted. Therefore, failure to timely submit Form 1295 signed and notarized may result in delay of award. Full instructions for completion and submittal of Form 1295 may be found on the Texas Ethics Commission website:

https://www.ethics.state.tx.us/tec/1295-Info.htm

THE AWARDED VENDOR WILL HAVE THIRTY (30) DAYS FROM THE DATE THE HIDALGO COUNTY COMMISSIONER'S COURT APPROVES THIS AGREEMENT TO SUBMIT THE SIGNED NOTARIZED FORM 1295. *HIDALGO COUNTY CANNOT ENTER INTO A CONTRACT UNTIL FORM 1295 IS SUBMITTED.*

23) If, during the life of any contract or bid awarded, the successful bidder's net prices generally available to other customers for items awarded herein are reduced below the contracted price, it is understood and agreed that the benefits of such reduction shall be extended to the County.

24) Bids, and all goods and services provided hereunder, shall comply with all federal, state and local laws concerning this type(s) of goods and/or services.

25) Minimum Standards for Responsible Prospective Bidders: A prospective bidder must affirmatively demonstrate bidder's responsibility. A prospective bidder, by submitting a bid, represents to County that it meets the following requirements:

- Possess or is able to obtain adequate financial resources as required to perform under the bid;
- Be able to comply with the required or proposed delivery schedule;
- Have a satisfactory record of performance;
- Have a satisfactory record of integrity and ethics;
- Be otherwise qualified and eligible to receive an award.

26) Successful bidder will pay or cause to be paid, without cost or expenses to County, all FICA, FUTA/SUTA and Federal Income Withholding Taxes of all employees, and all wages and benefits as required by Federal or State law. Successful bidder's officers, agents and/or employees will not be entitled to any benefits of an employee or elected official of County, including, but not limited to, benefits associated with County's civil service system.

27) Any contract award to a successful bidder will be in effect until (a) the contract expires, (b) delivery and acceptance of products, and/or performance of services ordered, or (c) terminated by County with thirty day's written notice prior to cancellation.

28) County reserves the right to enforce performance of any contract awarded hereunder in any manner prescribed by law or deemed to be in the best interest of the County in the event of breach or default by successful bidder; County reserves the right to terminate any contract immediately in the event a successful bidder fails to:

a) Meet schedules;
b) Pay any required fees or taxes; or
c) Otherwise perform in accordance with the specifications.

29) Successful bidder shall defend, indemnify and save harmless County and all its elected officials, officers, agents and employees from all suits, actions, or other claims of any character, name and description brought for or on account of any injuries or damages received or sustained by any person, persons, or property on account of any negligent act or fault of the successful bidder, or of any agent, employee, subcontractor or supplier of successful bidder in the execution of, or performance under, any contract which may result from bid award or which arises from any event or casualty happening on or within County premises themselves or happening upon or in any halls, elevators, entrances, stairways or approaches of or to such County facilities. Successful bidder shall pay any judgment with costs which may be obtained against County growing out of such injury or damages, and shall, upon request, provide a defense to County by counsel reasonably acceptable to County. Successful bidder’s indemnity hereunder shall include, but is not limited to, claims relating to patent, copyright or trademark infringement, and the like, arising out of the goods and services provided by successful bidder.

30) Successful bidder shall warrant that all items/services shall conform with the specifications and/or all warranties provided under the Uniform Commercial Code and be free from all defects in material, workmanship and the like. Items supplied under a contract pursuant to this Request for Bids shall be subject to County's approval. Items found to be defective or not meeting specifications shall be replaced by successful bidder within two business days at no expense to County. Items not picked up within one (1) week after notification shall be deemed a donation to County and may be used or disposed of at County's discretion and without waiver of any other rights of County as to the item's nonconformity.

31) This document and any disputes arising hereunder shall be governed and construed according to the laws of the State of Texas, and will be performable exclusively in Hidalgo County, Texas.

32) The successful bidder shall not assign, sell, transfer or convey its rights under any awarded contract, in whole or in part, without the prior written consent of County.

LEGAL NOTICE

Hidalgo County Sheriff's Office

""RENTAL OF INDUSTRIAL OF UNIFORMS""

RFB No. 2017-045-03-29-SMA

To: Martha L. Salazar, CPPB, Purchasing Agent
Physical Address: 2802 S. Business Hwy. 281 - Administration Building
Mailing/Postal Address: 2812 S. Business Hwy. 281
Edinburg, Texas 78539

In accordance with the Specifications, and subject to all laws and regulations of the United States and state and local laws, the undersigned bidder proposes and commits to furnish all labor, equipment, material, software and services as set forth in the documents hereinbefore mentioned. The undersigned bidder further agrees, upon acceptance of its bid, to execute a contract and/or Purchase Order issued by Hidalgo County for performing and completing the work described in the Specifications within the time stated and for the prices proposed in the documents attached hereto and made a part hereof.

Bidder acknowledges receipt of all of the pages of the documents referenced in the Invitation to Bid Checklist presented in connection with this procurement. Bidder understands that Hidalgo County reserves the right to reject any or all bids and further reserves the right to design the evaluation criteria to be used in selecting the lowest and best bid.

Bidder agrees that this bid shall be good and may not be withdrawn for a period of ninety (90) calendar days after the scheduled closing time for receiving bids, as contained in the Specifications.

Respectfully submitted,

BIDDER: _____

ADDRESS: _____

BY: _____

PRINTED NAME: _____

TITLE: _____

EXHIBIT "A"

SPECIFICATIONS/REQUIREMENTS

Hidalgo County

"*Rental of Industrial Uniforms*"

Bid No. 2017-045-03-29-SMA

PURPOSE:

The purpose of these specifications/requirements and bidding documents is to execute a Service Contract(s) for **"RENTAL OF INDUSTRIAL UNIFORMS"** for Hidalgo County for a two(2) years with the county's option to renew one(1) additional year

SCOPE

Hidalgo County is hereby requesting bids to select a service uniform program, and/or value leasing for **"UNIFORMS" on an as needed basis.** The contract will cover all services, travel, labor, and materials necessary to provide Hidalgo County with the specified **"UNIFORMS"** service. The vendor will pick up garments ; launder, repair, and deliver to various County locations on a weekly basis

SPECIFICATIONS/REQUIREMENTS:

Please read you specifications/requirements and bidding documents thoroughly and is sure that the services offered comply with all specifications/requirements. Any variation from the specifications/requirements must be clearly indicated by attaching a letter to your bid referencing variations on a point-by-point basis. If no exception are noted, and you are the successful vendor, it will be required that the SERVICES be provided as specified.

ALL UNIFORM SHIRTS AND PANTS SHALL BE PROVIDED IN BOTH MEN'S CUT AND LADIES' CUT STYLES.

There shall be no additional charge or cost for uniforms considered extra size, extended size, big & tall size, plus size, small size, or any other size which may mean to be outside the "normal" size.

1) The awarded vendor will be required to meet each department's uniform rental service to determine actual and any special needs.

2) UNIFORM SETS

For a full service uniform program, **eleven (11) sets of *"New"*** uniforms are required to be provided to each individual employee within their department. For a value leasing program, **six (6) sets of "New"** uniforms are required to be provided to each individual employee within their department. New Uniforms must be in comparable quality, fabric content style and color to existing uniforms. Including 100 % cotton short & long sleeve shirts. All available colors, sizes and plus sizes shall be provided to Hidalgo County to meet the department's needs.

3) UNIFORMS MEASUREMENTS:

a) The successful vendor will be required to measure each individual employee within a fifteen (15) working day period after notification by Hidalgo County of contract award and must deliver the uniforms within twenty (20) days after measurement of all employees. New uniforms are to be issued every year to each individual employee regardless the condition of the uniform.

b) New hires within the contract year are to be measured within five (5) working day(s) and are to be provide new uniforms within ten (10) working day(s)after notification by Hidalgo County, unless the new hire occurs thirty (30) days prior to the yearly anniversary date of the contract. In that event, the new hire would receive the new uniforms no later than the anniversary date of contract.

c) Due to the differences in the number of the employees utilizing this service, the awarded firm will be required to supply a reasonable range of sizes to accommodate the needs of the employees.

d) If an employee has gained or lost weight and their uniforms no longer fit, the Service Representative shall measure the employee and return the next week to replace the garment to the proper size at no additional cost.

4) Awarded vendor must provide coveralls at no additional cost to Hidalgo County.(Refer to Questionnaire, #5)

5) LAUNDERING and MAINTENANCE

Vendor(s) must provide professional cleaning & make regular deliveries (same day each and every week) for the full service uniform program. Vendor must also be able to pick up the soiled uniforms and deliver newly cleaned uniforms, however; if cleaned uniforms appear to be overly soiled (visible oil & grease spots) uniforms shall be replaced with clean uniforms & delivered immediately at no additional cost to Hidalgo County. All uniforms will be washed and cleaned thoroughly to remove production chemicals in order to prevent potential causes of irritation or skin rash from affecting employees.

6) Vendor must submit forms for requests for comments, problems and repair needs will be sent to the employees at least on a six (6) month basis.

7) REPLACEMENT/REPAIRS:

a) Vendor must provide County employees with the "Continuous Replacement System", for damaged, worn out, permanently soiled, or size change uniforms. No depreciation schedule will be used in replacing used uniforms. No additional charge will be placed on replacing uniforms or emblems.

b) Any of the garments which will need repairs (examples: missing buttons, tears in clothing, and damaged patches) must be repaired prior to acceptance of delivery of uniforms. **The vendor shall be available during the contract period to perform exchange services of worn out uniforms.**

c) Any uniform which cannot be repaired to a good condition when damaged must be replaced with items in comparable condition with those previously supplied at no cost to Hidalgo County Uniforms delivered with rips, holes, missing buttons, etc., will be sent back and no rental charge shall be paid for that item until it is returned in an acceptable condition.

8) GARMENT CONTROL

Vendor(s) shall maintain inventory control for each employee so that the Hidalgo County knows at all times how many uniforms have been assigned. Any delivery shortages must be corrected within forty-eight (48) hours to ensure that employee has adequate work clothes.

9) ***MONITORING OF CONTRACT:***

a) The awarded vendor will be required to establish a check-in/check-out inventory system at all locations where uniforms will be utilized. The forms must show, at a minimum, the quantity of each item turned

in by each employee, and the number of items delivered by the awarded vendor each week. This form should also reflect an addition, deletions, and transfers effective the next week. A copy of the check-in/check-out form shall be retained by both the driver and the user department , upon delivery at each location.

b) Hidalgo County reserves the right to add or delete additional employees, or locations at any time during this contract. These additions or deletions shall be at **no extra charge**, except for the weekly uniform costs involved.

c) DELIVERIES:

Deliveries shall be made **once per week** to each location requiring the full service uniform program. Delivery and pickup locations are subject to change, but not limited to the following:

	DEPARTMENT	ADDRESS	CITY	CONTACTS	PHONE
1.	Hidalgo County Facilities Management Office	3100 S. Bus 281 P.O Box 1356	Edinburg, Tx 78539	Daniel Flores	(956)287-7850
2.	Hidalgo County Precinct No. 1	1902 Joe Stephens Ave.	Weslaco, Tx 78596	Amy Saenz-Smith/Saul Garcia	(956)-968-8733
3.	Hidalgo County Precinct No. 2	4011 S. Veterans Blvd.	San Juan, Tx	Armando Pompa/Armando Salinas	(956)-787-1891
4.	Hidalgo County Precinct No. 3	724 N. Breyfogle Rd. (Administration Office)	Mission, TX 78574	Norma Ceballos	(956)-585-4509
		8310 W. Mile 7 Rd. (Pct 3 –Motor pool)	Mission, Tx 78574	Louie Mendoza	(956)-585-4509
		Penitas Landfill - 0.5 Mile W. of FM1427 on Military Rd.	Penitas, Texas	Norma Ceballos	(956)-585-4509
		Anzaldua's Park - US 83 & Conway South (approx) 3 Miles exit on FM494	Mission, Tx 78574	Norma Ceballos	(956)-585-4509
5.	Hidalgo County Sheriff's Office	711 El Cibolo Road	Edinburg, Tx78539	Juan Tapia/Raul Cantu	(956)383-8114
6.	Hidalgo County Health& Human Services	1304 S. 25th Street	Edinburg, Tx 78539	Josie Escalante	(956) 383-6221

Other Hidalgo County Departments may require this service in the future if so, additional information will be forwarded to awarded vendor. Garments are to be delivered on hangers.

UNIFORM COSTS:

Costs shall be based on provision and laundering of (11) eleven uniform sets (five day work week), and six (6) uniform sets (value lease program). These costs shall be inclusive of all charges including all environmental fees, delivery fees, prep fees, installation fees, setup fees, measurement fees and emblems charges; not only for the initial order, but also for employees added anytime during the contract period or any extension period. **Price(s) must be based on weekly rate; per employee.**

NO EXTRA OR ADDITIONAL CHARGES WILL BE ALLOWED TO SUCCESSFUL VENDOR

On the bid form, vendors shall also include the cost for replacement of uniforms lost by employees. Vendor shall base these charges upon individual occurrences, rather than include in the cost of overall pricing.

EMBLEMS:

Each uniform shall be provided with embroidered emblems, with County logo and employee name. The placement of the emblems on the front of the uniforms shall be:

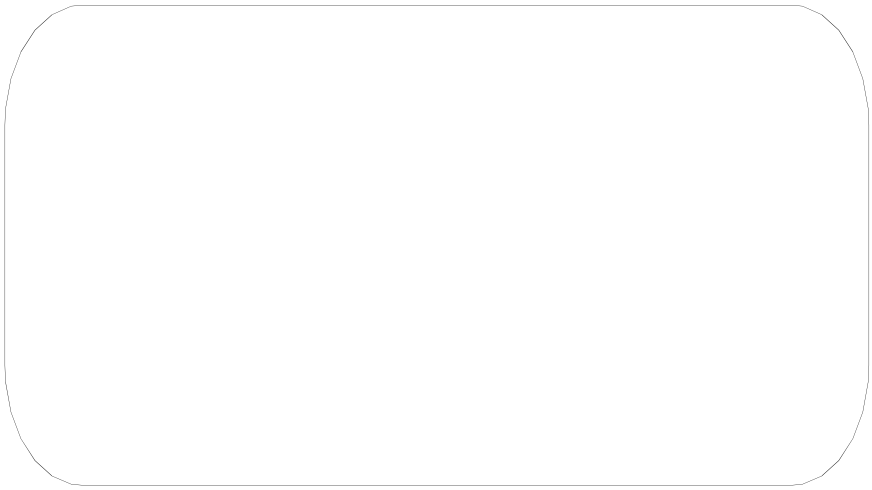

Size of Patches:

ROUNDED CORNERS / BLOCKED LETTERS
HIDALGO COUNTY LOGO (LEFT CHEST SIDE)
4 ½" W X 2 ½" H, APPROXIMATELY



EMPLOYEE NAME TAG (RIGHT CHEST SIDE)
3 ½" W x 1 ½"H, APPROXIMATELY

1) **LOGO TO BE PROVIDED ON POLO SHIRTS (EMBROIDERED) APPROPRIATE SIZE & COLOR OF LOGO TO BE DETERMINED BY USER DEPARTMENT(S).**

2) The cost for these emblems shall be the vendor's responsibility. Hidalgo County desires to have its emblems sewn to the uniforms. **On the bid price page indicate how your firm applies emblems to uniforms.**

3) Vendors should be aware that various departments may choose different logo emblems. Vendor shall indicate on the price page, the cost, if any, for the vendor to provide and install these logo emblems. Hidalgo County will work with the awarded vendor to attain an approved design. Actual samples of the finished patches must be provided for approval.

OUTFITTING OF UNIFORMS:

1) Initial outfitting of uniforms shall be new. As additional personnel hired, they shall be furnished with new uniforms.

2) Additional uniforms for "New Hire" employees shall be provided with eleven (11) or six (6) sets of "New" uniforms, depending on the program. Uniforms for new employees must be delivered within (10) working days after notification.

VENDOR REQUIREMENTS:

1) The vendor should maintain a permanent office within the Rio Grande Valley, operated by a full time staff.

2) If the awarded vendor is located out of the local calling area, it is required that the vendor have a toll free number.

3) Vendors shall issue separate invoices for each County Department that accesses this contract, based on individual purchase orders. The invoices must have the following: purchase order, ,contract number, employee names and the number of uniforms cleaned and returned for each employee.

4) Vendors shall be required to rectify any problem that he is made aware of, within ten days of said notice.

REQUIRED SUBMITTALS:

The following items must be submitted, and must be acceptable, in order for your bid to be considered.

1) Vendor(s) are required to submit a brief history of their company. Vendor shall also submit the names, addresses, phone numbers, and contact person of at least three businesses that utilize their firm's services as a reference.

2) UNIFORM SAMPLES

Vendor must submit, under separate cover, samples, identical in style and fabric to items to be provided under this bid. Samples must be submitted at no charge to Hidalgo County. Each sample shall be clearly labeled with the vendor's name, bid number, manufacturer and style number. Samples must be picked up by vendors, upon notification by Purchasing, after the evaluation has been completed.

3) Vendor(s) must submit a color chart, showing uniform colors available. Each Department will decide what colors and styles (executive, industrial, short or long sleeve, etc) that they require based on the samples submitted.

4) Vendor(s) must submit the size ranges (male and female) that are available for all items.

5) Vendor(s) must submit a **sample check-in/check-out form**.

6) Vendor(s) must submit a procedure for employee to begin, discontinue, or transfer uniform services from one location to another.

7) Vendor(s) must indicate their company criteria for determining when a uniform needs to be replaced. **(See Attachment A)**

UNIFORM RETURN:

At the termination of this contract all rental uniforms will be returned to the vendor within 20 days. Any shortages will be reimbursed by the County at the prices, as listed on the bid price form.

- ***Uniform Replacement Policy:***
  Policy for lost or unreturned uniforms must be stated on Attachment A.

- ***Uniform Credit Policy:***
  Credit for uniform service while employees are on sick leave, vacations and other leaves of absence and/or terminated /resigned employees must be stated on Attachment A.

- ***Uniform Loss or unreturned Policy:*** Attachments A
  It is the responsibility of the successful vendor to respond to complaints within forty-eight (48) hours with a reasonable and acceptable solution.

BASIS OF AWARD:

The basis of award will be overall lowest vendor meeting all specifications and requirements for each option. Option 1 (Full Service Uniform Program), Option 2 (Value Lease). It shall be at Hidalgo County's sole discretion to elect the most advantageous option. Hidalgo County reserves the right to award to one or more vendors whichever is in the best interest of the County.

TERM AND CONDITIONS:

1) Prices will be firm for a period of two (2) years with the County's option to renew one (1) additional year. **If awarded vendor incurs any additional expenses during the term of the contract, those additional expenses shall not be charged to Hidalgo County throughout the duration of the contract.**

2) Hidalgo County reserves the right to continue this bid for an additional sixty (60) day Grace Period at the end of the contract term due to unforeseen delay in award of the next contract term.

3) The contract shall remain in effect until contract expires, delivery/completion of services ordered or terminated by Hidalgo County within a thirty (30) day written notice prior to cancellation. The successful vendor must state therein the reasons for such cancellation. Hidalgo County reserves the right to award canceled contract to next lowest vendor as it deems to be in the best interest of the County.

4) Hidalgo County may seek purchases from state awarded vendors or any other cooperative purchasing programs, whenever it is in the best interest to do so.

5) Hidalgo County reserves the right to award to one or more vendors whichever is in the best interest of the County.

ADDITIONAL INFORMATION:

1) Hidalgo County is requesting that any and all questions, inquiries, and clarifications regarding the bid (RFB) to be addressed to, **Martha L. Salazar, CPPB, Purchasing Agent, Attn: Sandra Montalvo, 2812 So. Business 281 (New Administration Bldg), Edinburg, Texas 78539. Telephone inquiries will not be accepted.**

RFB Questions & Answers:

2) **ALL WRITTEN INQUIRIES WILL BE ACCEPTED VIA EMAIL TO sandra.montalvo@co.hidalgo.tx.us by NO LATER THAN, Wednesday, March 22, 2017 by 5:00 pm. RESPONSES** will be emailed by no later than, **5:00 p.m., Friday, Friday, March 24, 2017.**

3) All costs and expenses associated with the preparation and submission of (bids, proposals and/or quotes) shall be the responsibility of the vendor and no reimbursements for such charges or expenses shall be passed onto Hidalgo County.

ATTACHMENT A

(Uniform, Replacement, Credit Lost-Unreturned policies)

1) UNIFORM REPLACEMENT POLICY:
2) UNIFORM CREDIT POLICY:
3) UNIFORM LOSS OR UNRETURNED POLICY:

QUESTIONNAIRE

1. Is there a fee for returned uniforms upon termination or resignation of an employee? If so, what is your fee and how long must an employee lease a uniform without paying termination charges?

2. Will your company be capable of depicting actual charges?

3. Will your company furnish coveralls, free of charge, with the rental or purchase of uniforms? If so, how many?

4. If contract is awarded to your company, the prices will be in effect for the length of the contract.

5. Please list any warranties and any other policies not described in Attachment A.

REFERENCES

Please list three (3) references of current customers who can verify the quality of service your company provides.

1) Government/Company Name:_____

   Address:_____

   Contact Person and Title:_____

   Phone:_____ email address:_____

   Contract Period:_____ Scope of Work:_____

2) Government/Company Name:_____

   Address:_____

   Contact Person and Title:_____

   Phone:_____ email address:_____

   Contract Period:_____ Scope of Work:_____

3) Government/Company Name:_____

   Address:_____

   Contact Person and Title:_____

   Phone:_____ email address:_____

   Contract Period:_____ Scope of Work:_____

EXHIBIT "B"

BID PAGE

Hidalgo County

"RENTAL INDUSTRIAL UNIFORMS"

Bid No. 2017-045-03-29-SMA

Bid prices to include all environmental fees, delivery fees, prep fees, installation fees, setup fees, measurement fees and emblems charges; not only for the initial order, but also for employees added anytime during the contract period or any extension period. NO EXTRA OR ADDITIONAL CHARGES WILL BE ALLOWED TO SUCCESSFUL BIDDER.

	ITEM DESCRIPTION		OPTION 1 *Full Service* Weekly rate rental per employee	OPTION 2 *Value Lease* Weekly rate per employee	Price For Lost Garment
1.	**SHIRTS-** Industrial (Men & Women) 65% Polyester 35% Cotton	Long sleeve			
		Short sleeve			
2.	**SHIRTS**- Industrial (Men & Women) 100% cotton	Long sleeve			
		Short sleeve			
3.	**SHIRTS**- Industrial (Men & Women) Reflective & Fluorescent Green Stripes on the sleeves, Front pockets & back of the Shirt 65% Polyester 35% Cotton	Long sleeve			
		Short sleeve			
4.	**SHIRTS**- Industrial (Men & Women) Reflective & Fluorescent Green Stripes on the sleeves, Front pockets & back of the Shirt 100% Polyester	Long sleeve			
		Short sleeve			
5.	**SHIRTS**- (Men & Women) **High-Visibility (ansi-complaint) Class 3 work shirt** Reflective striping on the sleeves & body, button-chest pockets with pencil stall, stain release and moisture control, ANSI/SEA 107-2010 class 3 certified, 100 polyester poplin	Long sleeve			
		Short sleeve			
6.	**SHIRTS- Executive Style (Men)** 65% Polyester 35% Cotton				
7.	**POLO SHIRTS (men & women)** 50% Polyester 50% Cotton				
8.	**POLO SHIRTS (men & women)** 100% Polyester				
9.	**SHORT SLEEVE SMOCK (women)** 80 % Polyester 20% Cotton poplin				
10.	**TROUSERS-Industrial (men)** 65% Polyester 35% Cotton				
11.	**TROUSERS-**INDUSTRIAL (WOMEN) 65% Polyester 35% Cotton				
12.	**EXECUTIVE PANTS** (Men) *must be available for Supervisory positions as requested by dept. 65% Polyester 35% Cotton				
13.	**PANTS-(MEN)** 100% rip stop cotton pants military-grade heavyweight 10-oz				
14.	**PANTS-**Performance Shop 54% polyester, 42% cotton, 2% spandex				

15.	**DENIM BLUE JEANS-** 100% Cotton- **(MEN)** (Boot Cut, Flare & Straight Leg)13.75oz-14 oz. Denim			
16.	**SHORTS-** Uniform (Men) 65% Polyester/35% Cotton			
17.	**SHORTS-** Uniform (Women) 65% Polyester/35% Cotton			
18.	**COVERALLS-** 65% Polyester 35% Cotton			
19.	**PATCHES AND/OR LOGO**s-- one time charge for Shirt			
20.	**ADDITIONAL FEES** (if any):			

ACKNOWLEDGMENT FORM

I/We the undersigned hereby certify that I/We am/are a duly authorized official of the company and have the authority to sign on behalf of the company and assure that all statements made in the bid are true. I/We agree to furnish and deliver the specified items/services at the prices stated herein, and have read, understand, and agree to the terms and conditions contained herein and on all of the attachments.

Bidder /Company's Name: _____

Address: _____

City/State/Zip Code: _____

Phone Number/: _____

Cellular Number: _____

Fax Number: _____

Authorized Signature: _____

Email Address: _____

Printed Name: _____

Title: _____

Date: _____

EXHIBIT "C"

Insurance Requirements
Applicable to the Acquisition of Goods and /or Services
(Other than Professional Services)

The Bidder awarded the contract shall furnish proof of insurance, which will also include any subcontractor that is subcontracted by the bidder in at least the following limits, to be in place prior to providing any services under this Contract and to continue at all times in force in effect during the term of this Contract:

1. A Five Hundred Thousand Dollar ($500,000.00) Comprehensive General Liability insurance policy providing additional coverage to all underlying liabilities of County.

2. Automobile liability insurance policy with limits of at least Three Hundred Thousand Dollars ($300,000.00) per person and Five Hundred Thousand Dollars ($500,000.00) per occurrence. Coverage should include injury to or death of persons and property damage claims with limits up to Five Hundred Thousand ($500,000.00) arising out of the services provided to County hereunder.

3. Uninsured/Underinsured motorist coverage in an amount equal to the bodily injury limits set forth immediately above;

4. Workers compensation insurance in amounts established by Texas law, unless the Bidder is specifically exempted from the Texas Workers Compensation Act, Texas Labor Code Chapter 401, et. seq.

Hidalgo County will only accept certificates of insurance on an Acord form (as attached hereto). Certificates of insurance naming County as an **additional insured** shall be submitted to County for approval prior to any services being performed by Contractor. Each policy of insurance required hereunder shall extend for a period equivalent to, or longer than the term of the Contract, and any insurer hereunder shall be required to give at least thirty (30) days written notice to the County prior to the cancellation of any such coverage on the termination date, or otherwise. This Contract shall be automatically suspended upon the cancellation, or other termination, of any required policy of insurance hereunder, and such suspension shall continue until evidence adequate replacement coverage is provided to County. If replacement coverage is not provided within thirty (30) days following suspension of the Contract, this Contract shall automatically terminate.

Revised 03/11/11

EXHIBIT "C"

Insurance Requirements

ACORD	CERTIFICATE OF INSURANCE	DATE (MM/DD/YY)
PRODUCER	THIS CERTIFICATE IS ISSUED AS A MATTER OF INFORMATION ONLY AND CONFERS NO RIGHTS UPON THE CERTIFICATE HOLDER. THIS CERTIFICATE DOES NOT AMEND, EXTEND OR ALTER THE COVERAGE AFFORDED BY THE POLICIES BELOW.	
	INSURERS AFFORDING COVERAGE	
INSURED	INSURER A:	
	INSURER B:	
	INSURER C:	
	INSURER D:	
	INSURER E:	

COVERAGES

THE POLICIES OF INSURANCE LISTED BELOW HAVE BEEN ISSUED TO THE INSURED NAMED ABOVE FOR THE POLICY PERIOD INDICATED. NOTWITHSTANDING ANY REQUIREMENT, TERM OR CONDITION OF ANY CONTRACT OR OTHER DOCUMENT WITH RESPECT TO WHICH THIS CERTIFICATE MAY BE ISSUED OR MAY PERTAIN, THE INSURANCE AFFORDED BY THE POLICIES DESCRIBED HEREIN IS SUBJECT TO ALL THER TERMS, EXCLUSIONS AND CONDITIONS OF SUCH POLICIES. AGGREGATE LIMITS SHOWN MAY HAVE BEEN REDUCED BY PAID CLAIMS.

INSR LTR	TYPE OF INSURANCE	POLICY NUMBER	POLICY EFFECTIVE DATE (MM/DD/YY)	POLICY EXPIRATION DATE (MM/DD/YY)	LIMITS	
A	**GENERAL LIABILITY** ☐ COMMERCIAL GENERAL LIABILITY ☐ ☐ CLAIMS MADE OCCUR ☐ OWNER'S & CONT. PROT ☐ OWNER'S PROTECTIVE LIABILITY GEN'L AGGREGATE LIMIT APPLIES PER: ☐ POLICY PROJECT ☐ LOC				EACH OCCURRENCE FIRE DAMAGE (Any one fire) MED (Any one person) PERS & ADV INJURY AL AGGREGATE ODUCTS – COMP/OP AGG	$ $ $ $ $ $
B	**AUTOMOBILE LIABILITY** ☐ ANY AUTO ☐ ALL OWNED AUTOS ☐ SCHEDULED AUTOS ☐ HIRED AUTOS ☐ NON-OWNED AUTOS				COMBINED SINGLE LIMIT (Ea accident) BODILY INJURY (Per person) BODILY INJURY (Per accident) PROPERTY DAMAGE (Per accident)	$ $ $ $
	GARAGE LIABILITY ☐ ANY AUTO				AUTO ONLY-EA ACCIDENT OTHER THAN AUTO ONLY EA ACC AGG	$ $ $
C	**EXCESS LIABILITY** ☐ OCCUR ☐ CLAIMS MADE ☐ DEDUCTIBLE ☐ RETENTION $				EACH OCCURENCE AGGREGATE	$ $
D	**WORKERS COMPENSATION AND EMPLOYER'S LIABILIT**				WC STATU-TORY LIMITS ☐ OTHER E.L. EACH ACCIDENT E.L. DISEASE-EA EMPLOYEE E.L. DISEASE-POLICY LIMIT	 $ $ $
	OTHER					

DESCRIPTION OF OPERATIONS / LOCATION / VEHICLES / EXCLUSIONS ADDED BY ENDORSEMENT / SPECIAL PROVISIONS

County of Hidalgo shall be named as additional insured on all Commercial General Liability policies.

CERTIFICATE HOLDER	ADDITIONAL INSURED; INSURER LETTER: _____ CANCELLATION
Hidalgo County **Attn: Purchasing Department** **2812 S Highway Bus. 281** **Edinburg, Texas 78539**	SHOULD ANY OF THE ABOVE DESCRIBED POLICIES BY CANCELLED BEFORE THE EXPIRATION DATE THEREOF, THE ISSUING INSURER WILL ENDEAVOR TO MAIL ***30*** DAYS WRITTEN NOTICE TO THE CERTIFICATE HOLDER NAMED TO THE LEFT, BUT FAILURE TO DO SO SHALL IMPOSE NO OBLIGATION OR LIABILITY OF ANY KIND UPON THE INSURER, ITS AGENTS OR REPRESENTATIVES. AUTHORIZED REPRESENTATIVE

SAMPLE

EXHIBIT "C"

Insurance Requirements

Acknowledgment

I, _____, authorized representative for _____,
Company/Vendor

hereby acknowledge receipt of the County's required insurance limits. Said requirements:

☐ will be acquired within 10 working days after notification from Purchasing Department of bid awarded by the Hidalgo County Commissioners' Court;

☐ will acquire additional amounts required to meet the County's requirements within 10 working days after notification from Purchasing Department of bid award by the Hidalgo County Commissioners' Court; currently carry the following:

Automobile Liability: $_____ General Liability: $_____

☐ have already been met, see attached copy of insurance certificate.

_____ _____.
Authorized Representative Date

NOTICE TO BIDDER:
A certificate of insurance for the required insurance limits shall be provided to the Purchasing Department's Contract Managers in order to qualify for award of bid and to execute a contract between your Company and the County.

Failure to provide Certificates of Insurance to the Purchasing Department's Contract Managers will cause the bid award to be rescinded and re-awarded to next lowest bidder. Certificates of Insurance will be monitored and verified on a **quarterly basis** to ensure coverage policy is in place. It is the Company's obligation to maintain the appropriate insurance coverage throughout the term of the contract.

THIS FORM MUST ACCOMPANY BID PACKET

EXHIBIT "C"

Insurance Requirements
PROJECT REQUIREMENTS
ACKNOWLEDGMENT

This is to certify that I, _____, possess all of the APPLICABLE:

1. Licenses: _____.

2. Bond (if applicable)_____

3. Certificates: _____.

4. Permits: _____.

5. Other: _____.

necessary to carry out the required project. Furthermore, I am providing copies of the required documentation so that, if my company is awarded this bid, I may be eligible to enter into a contract with Hidalgo County and proceed to complete the project in a timely manner.

* Any licenses, bonds (if applicable), certificates, permits, etc. which are required must be presented as part of the bid packet in order to expedite the bid evaluation process.

_____ _____.
Authorized Signature Date

_____.
Company

_____.
Address

_____.
City, State, Zip

THIS FORM MUST ACCOMPANY BID PACKET

CONFLICT OF INTEREST QUESTIONNAIRE

FORM CIQ

For vendor doing business with local governmental entity

This questionnaire reflects changes made to the law by H.B. 23, 84th Leg., Regular Session.

This questionnaire is being filed in accordance with Chapter 176, Local Government Code, by a vendor who has a business relationship as defined by Section 176.001(1-a) with a local governmental entity and the vendor meets requirements under Section 176.006(a).

By law this questionnaire must be filed with the records administrator of the local governmental entity not later than the 7th business day after the date the vendor becomes aware of facts that require the statement to be filed. *See* Section 176.006(a-1), Local Government Code.

A vendor commits an offense if the vendor knowingly violates Section 176.006, Local Government Code. An offense under this section is a misdemeanor.

OFFICE USE ONLY

Date Received

1 **Name of vendor who has a business relationship with local governmental entity.**

2 ☐ **Check this box if you are filing an update to a previously filed questionnaire.** (The law requires that you file an updated completed questionnaire with the appropriate filing authority not later than the 7th business day after the date on which you became aware that the originally filed questionnaire was incomplete or inaccurate.)

3 **Name of local government officer about whom the information is being disclosed.**

_____

Name of Officer

4 **Describe each employment or other business relationship with the local government officer, or a family member of the officer, as described by Section 176.003(a)(2)(A). Also describe any family relationship with the local government officer. Complete subparts A and B for each employment or business relationship described. Attach additional pages to this Form CIQ as necessary.**

A. Is the local government officer or a family member of the officer receiving or likely to receive taxable income, other than investment income, from the vendor?

☐ Yes ☐ No

B. Is the vendor receiving or likely to receive taxable income, other than investment income, from or at the direction of the local government officer or a family member of the officer AND the taxable income is not received from the local governmental entity?

☐ Yes ☐ No

5 **Describe each employment or business relationship that the vendor named in Section 1 maintains with a corporation or other business entity with respect to which the local government officer serves as an officer or director, or holds an ownership interest of one percent or more.**

6 ☐ Check this box if the vendor has given the local government officer or a family member of the officer one or more gifts as described in Section 176.003(a)(2)(B), excluding gifts described in Section 176.003(a-1).

7

_____ _____

Signature of vendor doing business with the governmental entity Date

CONFLICT OF INTEREST QUESTIONNAIRE
For vendor doing business with local governmental entity

A complete copy of Chapter 176 of the Local Government Code may be found at http://www.statutes.legis.state.tx.us/Docs/LG/htm/LG.176.htm. For easy reference, below are some of the sections cited on this form.

Local Government Code § 176.001(1-a): "Business relationship" means a connection between two or more parties based on commercial activity of one of the parties. The term does not include a connection based on:

(A) a transaction that is subject to rate or fee regulation by a federal, state, or local governmental entity or an agency of a federal, state, or local governmental entity;

(B) a transaction conducted at a price and subject to terms available to the public; or

(C) a purchase or lease of goods or services from a person that is chartered by a state or federal agency and that is subject to regular examination by, and reporting to, that agency.

Local Government Code § 176.003(a)(2)(A) and (B):

(a) A local government officer shall file a conflicts disclosure statement with respect to a vendor if:

***

(2) the vendor:

(A) has an employment or other business relationship with the local government officer or a family member of the officer that results in the officer or family member receiving taxable income, other than investment income, that exceeds $2,500 during the 12-month period preceding the date that the officer becomes aware that

(i) a contract between the local governmental entity and vendor has been executed; or

(ii) the local governmental entity is considering entering into a contract with the vendor;

(B) has given to the local government officer or a family member of the officer one or more gifts that have an aggregate value of more than $100 in the 12-month period preceding the date the officer becomes aware that:

(i) a contract between the local governmental entity and vendor has been executed; or

(ii) the local governmental entity is considering entering into a contract with the vendor.

Local Government Code § 176.006(a) and (a-1)

(a) A vendor shall file a completed conflict of interest questionnaire if the vendor has a business relationship with a local governmental entity and:

(1) has an employment or other business relationship with a local government officer of that local governmental entity, or a family member of the officer, described by Section 176.003(a)(2)(A);

(2) has given a local government officer of that local governmental entity, or a family member of the officer, one or more gifts with the aggregate value specified by Section 176.003(a)(2)(B), excluding any gift described by Section 176.003(a-1); or

(3) has a family relationship with a local government officer of that local governmental entity.

(a-1) The completed conflict of interest questionnaire must be filed with the appropriate records administrator not later than the seventh business day after the later of:

(1) the date that the vendor:

(A) begins discussions or negotiations to enter into a contract with the local governmental entity; or

(B) submits to the local governmental entity an application, response to a request for proposals or bids, correspondence, or another writing related to a potential contract with the local governmental entity; or

(2) the date the vendor becomes aware:

(A) of an employment or other business relationship with a local government officer, or a family member of the officer, described by Subsection (a);

(B) that the vendor has given one or more gifts described by Subsection (a); or

(C) of a family relationship with a local government officer.

HIDALGO COUNTY
PURCHASING DEPARTMENT
Bidder/Vendor Application

Complete in print or type. Please return this application to the Hidalgo County Purchasing Department
thru Facsimile: (956) 318-2629 or (956) 292-7612
in person or regular mail to: 2812 S. Business Hwy. 281 , Edinburg, Texas 78539
or email: purchasing@co.hidalgo.tx.us

Company Name: **Telephone No. ( )**

dba Name:

Legal Name:

Mailing Address : **Fax No. ( )**

Physical Address:

City, State, Zip **Tax I.D. No.**

Remit to Address : **City, State, Zip**

E-Mail Address:

Representative(s) Name(s) & Title(s)

Type of Organization (check one): _____ Individual _____ Partnership _____ Corporation _____Non-Profit
_____ LLC _____ Sole Proprietor _____ Other, Specify
State Identification No._____ (Please attached completed W-9 form with this application)
Federal Identification No. or (if individual) SS No.

State of Incorporation: _____ Date:_____ Other:

Type of Business (check one): _____ Manufacturer _____ Wholesaler _____ Retailer _____ Broker
_____ Distributor _____ Service Organization _____ Other, Specify

Name & Title of Person(s) Authorized to Sign Bids, Proposals, and/or Contracts:

Small and/or Disadvantaged Business Information (check application criteria)
Small Business: **Disadvantaged Business (At Least 51% Ownership)**

- ☐ Less than 125,000 annual gross receipt
- ☐ Less than 250,000 annual gross receipt
- ☐ Less than 499,000 annual gross receipt
- ☐ More than 500,000 annual gross receipt

- ☐ Black American
- ☐ Hispanic American
- ☐ Asian Pacific American

- ☐ Native American
- ☐ Women
- ☐ Other

Have you been certified as a HUB or an MBE/WBE source?: ☐ Yes ☐ No

Indicate Certification No.(s):_____ or are Certificate(s) attached?: ☐ Yes ☐ No

What type of product(s) is/are solicited by your company?:

Would you like to be provided with specifications for procurements of such products?: ☐ Yes ☐ No

To Be Completed by the County: Rec'd by (Purchasing):_____ Date Rec'd by (Purchasing):

Date Forwarded Information to Auditor's Office:_____Entry Date: _____ Vendor No.:

HISTORICALLY UNDERUTILIZED BUSINESS (HUB) DECLARATION

The primary objective of the Hidalgo County HUB Program is to ensure Historically Underutilized Businesses receive a fair and equal opportunity for participation in the County's procurement process. This fact holds true for Services (Professional & Non-Professional), Commodities, and Construction contracts and any subcontracts thereto. The program strongly encourages Prime Contractors to provide subcontracting opportunities to Certified Hub Contractors/Vendors. Our goal for HUB contractor/vendor participation, as well as HUB subcontractor participation is 30%. To be considered as a "Certified HUB Contractor/Vendor" the contractor/vendor must have been certified by, and hold a current and valid certification with any of the three agencies listed below.

Have you been Certified as a HUB or an MBE/WBE source?: □Yes □ No

If yes, by whom?: □ Texas Building & Procurement Commission □ Other_____

Indicate Certification No(s).:_____ or Are Certificate(s) Attached?: □ Yes □ No

---

LIST OF CERTIFIED HUB SUBCONTRACTORS

(Attach additional pages if necessary)

What percentage of the Bid, RFP,or RFQ is to be subcontracted with Certified HUB sources?: _____%
(List HUB Subcontractor information below).

HUB Subcontractor Name: _____ HUB Status:
Certifying Agency (Check all applicable): □Texas Building & Procurement Commission □ Other
Address: _____ City: _____ State: _____ Zip:
Contact Person: _____ Title: _____ Phone No.: ( )
Subcontract Amount: $_____ Description of Work to be Performed:

HUB Subcontractor Name: _____ HUB Status:
Certifying Agency (Check all applicable): □Texas Building & Procurement Commission □ Other
Address: _____ City: _____ State: _____ Zip:
Contact Person: _____ Title: _____ Phone No.: ( )
Subcontract Amount: $_____ Description of Work to be Performed:

HUB Subcontractor Name: _____ HUB Status:
Certifying Agency (Check all applicable): □Texas Building & Procurement Commission □ Other
Address: _____ City: _____ State: _____ Zip:
Contact Person: _____ Title: _____ Phone No.: ( )
Subcontract Amount: $_____ Description of Work to be Performed:

Form **W-9**
(Rev. December 2014)
Department of the Treasury
Internal Revenue Service

Request for Taxpayer Identification Number and Certification

Give Form to the requester. Do not send to the IRS.

Print or type
See Specific Instructions on page 2.

1 Name (as shown on your income tax return). Name is required on this line; do not leave this line blank.

2 Business name/disregarded entity name, if different from above

3 Check appropriate box for federal tax classification; check only **one** of the following seven boxes:

☐ Individual/sole proprietor or single-member LLC ☐ C Corporation ☐ S Corporation ☐ Partnership ☐ Trust/estate

☐ Limited liability company. Enter the tax classification (C=C corporation, S=S corporation, P=partnership) ▶ _____

Note. For a single-member LLC that is disregarded, do not check LLC; check the appropriate box in the line above for the tax classification of the single-member owner.

☐ Other (see instructions) ▶

4 Exemptions (codes apply only to certain entities, not individuals; see instructions on page 3):

Exempt payee code (if any) _____

Exemption from FATCA reporting code (if any) _____

(Applies to accounts maintained outside the U.S.)

5 Address (number, street, and apt. or suite no.)

Requester's name and address (optional)

6 City, state, and ZIP code

7 List account number(s) here (optional)

Part I Taxpayer Identification Number (TIN)

Enter your TIN in the appropriate box. The TIN provided must match the name given on line 1 to avoid backup withholding. For individuals, this is generally your social security number (SSN). However, for a resident alien, sole proprietor, or disregarded entity, see the Part I instructions on page 3. For other entities, it is your employer identification number (EIN). If you do not have a number, see *How to get a TIN* on page 3.

Note. If the account is in more than one name, see the instructions for line 1 and the chart on page 4 for guidelines on whose number to enter.

Social security number

			–		–				

or

Employer identification number

		–							

Part II Certification

Under penalties of perjury, I certify that:

1. The number shown on this form is my correct taxpayer identification number (or I am waiting for a number to be issued to me); and
2. I am not subject to backup withholding because: (a) I am exempt from backup withholding, or (b) I have not been notified by the Internal Revenue Service (IRS) that I am subject to backup withholding as a result of a failure to report all interest or dividends, or (c) the IRS has notified me that I am no longer subject to backup withholding; and
3. I am a U.S. citizen or other U.S. person (defined below); and
4. The FATCA code(s) entered on this form (if any) indicating that I am exempt from FATCA reporting is correct.

Certification instructions. You must cross out item 2 above if you have been notified by the IRS that you are currently subject to backup withholding because you have failed to report all interest and dividends on your tax return. For real estate transactions, item 2 does not apply. For mortgage interest paid, acquisition or abandonment of secured property, cancellation of debt, contributions to an individual retirement arrangement (IRA), and generally, payments other than interest and dividends, you are not required to sign the certification, but you must provide your correct TIN. See the instructions on page 3.

Sign Here | **Signature of U.S. person** ▶ | **Date** ▶

General Instructions

Section references are to the Internal Revenue Code unless otherwise noted.

Future developments. Information about developments affecting Form W-9 (such as legislation enacted after we release it) is at *www.irs.gov/fw9*.

Purpose of Form

An individual or entity (Form W-9 requester) who is required to file an information return with the IRS must obtain your correct taxpayer identification number (TIN) which may be your social security number (SSN), individual taxpayer identification number (ITIN), adoption taxpayer identification number (ATIN), or employer identification number (EIN), to report on an information return the amount paid to you, or other amount reportable on an information return. Examples of information returns include, but are not limited to, the following:

- Form 1099-INT (interest earned or paid)
- Form 1099-DIV (dividends, including those from stocks or mutual funds)
- Form 1099-MISC (various types of income, prizes, awards, or gross proceeds)
- Form 1099-B (stock or mutual fund sales and certain other transactions by brokers)
- Form 1099-S (proceeds from real estate transactions)
- Form 1099-K (merchant card and third party network transactions)
- Form 1098 (home mortgage interest), 1098-E (student loan interest), 1098-T (tuition)
- Form 1099-C (canceled debt)
- Form 1099-A (acquisition or abandonment of secured property)

Use Form W-9 only if you are a U.S. person (including a resident alien), to provide your correct TIN.

If you do not return Form W-9 to the requester with a TIN, you might be subject to backup withholding. See *What is backup withholding?* on page 2.

By signing the filled-out form, you:

1. Certify that the TIN you are giving is correct (or you are waiting for a number to be issued),
2. Certify that you are not subject to backup withholding, or
3. Claim exemption from backup withholding if you are a U.S. exempt payee. If applicable, you are also certifying that as a U.S. person, your allocable share of any partnership income from a U.S. trade or business is not subject to the withholding tax on foreign partners' share of effectively connected income, and
4. Certify that FATCA code(s) entered on this form (if any) indicating that you are exempt from the FATCA reporting, is correct. See *What is FATCA reporting?* on page 2 for further information.

Note. If you are a U.S. person and a requester gives you a form other than Form W-9 to request your TIN, you must use the requester's form if it is substantially similar to this Form W-9.

Definition of a U.S. person. For federal tax purposes, you are considered a U.S. person if you are:

- An individual who is a U.S. citizen or U.S. resident alien;
- A partnership, corporation, company, or association created or organized in the United States or under the laws of the United States;
- An estate (other than a foreign estate); or
- A domestic trust (as defined in Regulations section 301.7701-7).

Special rules for partnerships. Partnerships that conduct a trade or business in the United States are generally required to pay a withholding tax under section 1446 on any foreign partners' share of effectively connected taxable income from such business. Further, in certain cases where a Form W-9 has not been received, the rules under section 1446 require a partnership to presume that a partner is a foreign person, and pay the section 1446 withholding tax. Therefore, if you are a U.S. person that is a partner in a partnership conducting a trade or business in the United States, provide Form W-9 to the partnership to establish your U.S. status and avoid section 1446 withholding on your share of partnership income.

In the cases below, the following person must give Form W-9 to the partnership for purposes of establishing its U.S. status and avoiding withholding on its allocable share of net income from the partnership conducting a trade or business in the United States:

- In the case of a disregarded entity with a U.S. owner, the U.S. owner of the disregarded entity and not the entity;
- In the case of a grantor trust with a U.S. grantor or other U.S. owner, generally, the U.S. grantor or other U.S. owner of the grantor trust and not the trust; and
- In the case of a U.S. trust (other than a grantor trust), the U.S. trust (other than a grantor trust) and not the beneficiaries of the trust.

Foreign person. If you are a foreign person or the U.S. branch of a foreign bank that has elected to be treated as a U.S. person, do not use Form W-9. Instead, use the appropriate Form W-8 or Form 8233 (see Publication 515, Withholding of Tax on Nonresident Aliens and Foreign Entities).

Nonresident alien who becomes a resident alien. Generally, only a nonresident alien individual may use the terms of a tax treaty to reduce or eliminate U.S. tax on certain types of income. However, most tax treaties contain a provision known as a "saving clause." Exceptions specified in the saving clause may permit an exemption from tax to continue for certain types of income even after the payee has otherwise become a U.S. resident alien for tax purposes.

If you are a U.S. resident alien who is relying on an exception contained in the saving clause of a tax treaty to claim an exemption from U.S. tax on certain types of income, you must attach a statement to Form W-9 that specifies the following five items:

1. The treaty country. Generally, this must be the same treaty under which you claimed exemption from tax as a nonresident alien.

2. The treaty article addressing the income.

3. The article number (or location) in the tax treaty that contains the saving clause and its exceptions.

4. The type and amount of income that qualifies for the exemption from tax.

5. Sufficient facts to justify the exemption from tax under the terms of the treaty article.

Example. Article 20 of the U.S.-China income tax treaty allows an exemption from tax for scholarship income received by a Chinese student temporarily present in the United States. Under U.S. law, this student will become a resident alien for tax purposes if his or her stay in the United States exceeds 5 calendar years. However, paragraph 2 of the first Protocol to the U.S.-China treaty (dated April 30, 1984) allows the provisions of Article 20 to continue to apply even after the Chinese student becomes a resident alien of the United States. A Chinese student who qualifies for this exception (under paragraph 2 of the first protocol) and is relying on this exception to claim an exemption from tax on his or her scholarship or fellowship income would attach to Form W-9 a statement that includes the information described above to support that exemption.

If you are a nonresident alien or a foreign entity, give the requester the appropriate completed Form W-8 or Form 8233.

Backup Withholding

What is backup withholding? Persons making certain payments to you must under certain conditions withhold and pay to the IRS 28% of such payments. This is called "backup withholding." Payments that may be subject to backup withholding include interest, tax-exempt interest, dividends, broker and barter exchange transactions, rents, royalties, nonemployee pay, payments made in settlement of payment card and third party network transactions, and certain payments from fishing boat operators. Real estate transactions are not subject to backup withholding.

You will not be subject to backup withholding on payments you receive if you give the requester your correct TIN, make the proper certifications, and report all your taxable interest and dividends on your tax return.

Payments you receive will be subject to backup withholding if:

1. You do not furnish your TIN to the requester,

2. You do not certify your TIN when required (see the Part II instructions on page 3 for details),

3. The IRS tells the requester that you furnished an incorrect TIN,

4. The IRS tells you that you are subject to backup withholding because you did not report all your interest and dividends on your tax return (for reportable interest and dividends only), or

5. You do not certify to the requester that you are not subject to backup withholding under 4 above (for reportable interest and dividend accounts opened after 1983 only).

Certain payees and payments are exempt from backup withholding. See *Exempt payee code* on page 3 and the separate Instructions for the Requester of Form W-9 for more information.

Also see *Special rules for partnerships* above.

What is FATCA reporting?

The Foreign Account Tax Compliance Act (FATCA) requires a participating foreign financial institution to report all United States account holders that are specified United States persons. Certain payees are exempt from FATCA reporting. See *Exemption from FATCA reporting code* on page 3 and the Instructions for the Requester of Form W-9 for more information.

Updating Your Information

You must provide updated information to any person to whom you claimed to be an exempt payee if you are no longer an exempt payee and anticipate receiving reportable payments in the future from this person. For example, you may need to provide updated information if you are a C corporation that elects to be an S corporation, or if you no longer are tax exempt. In addition, you must furnish a new Form W-9 if the name or TIN changes for the account; for example, if the grantor of a grantor trust dies.

Penalties

Failure to furnish TIN. If you fail to furnish your correct TIN to a requester, you are subject to a penalty of $50 for each such failure unless your failure is due to reasonable cause and not to willful neglect.

Civil penalty for false information with respect to withholding. If you make a false statement with no reasonable basis that results in no backup withholding, you are subject to a $500 penalty.

Criminal penalty for falsifying information. Willfully falsifying certifications or affirmations may subject you to criminal penalties including fines and/or imprisonment.

Misuse of TINs. If the requester discloses or uses TINs in violation of federal law, the requester may be subject to civil and criminal penalties.

Specific Instructions

Line 1

You must enter one of the following on this line; **do not** leave this line blank. The name should match the name on your tax return.

If this Form W-9 is for a joint account, list first, and then circle, the name of the person or entity whose number you entered in Part I of Form W-9.

a. **Individual.** Generally, enter the name shown on your tax return. If you have changed your last name without informing the Social Security Administration (SSA) of the name change, enter your first name, the last name as shown on your social security card, and your new last name.

Note. ITIN applicant: Enter your individual name as it was entered on your Form W-7 application, line 1a. This should also be the same as the name you entered on the Form 1040/1040A/1040EZ you filed with your application.

b. **Sole proprietor or single-member LLC.** Enter your individual name as shown on your 1040/1040A/1040EZ on line 1. You may enter your business, trade, or "doing business as" (DBA) name on line 2.

c. **Partnership, LLC that is not a single-member LLC, C Corporation, or S Corporation.** Enter the entity's name as shown on the entity's tax return on line 1 and any business, trade, or DBA name on line 2.

d. **Other entities.** Enter your name as shown on required U.S. federal tax documents on line 1. This name should match the name shown on the charter or other legal document creating the entity. You may enter any business, trade, or DBA name on line 2.

e. **Disregarded entity.** For U.S. federal tax purposes, an entity that is disregarded as an entity separate from its owner is treated as a "disregarded entity." See Regulations section 301.7701-2(c)(2)(iii). Enter the owner's name on line 1. The name of the entity entered on line 1 should never be a disregarded entity. The name on line 1 should be the name shown on the income tax return on which the income should be reported. For example, if a foreign LLC that is treated as a disregarded entity for U.S. federal tax purposes has a single owner that is a U.S. person, the U.S. owner's name is required to be provided on line 1. If the direct owner of the entity is also a disregarded entity, enter the first owner that is not disregarded for federal tax purposes. Enter the disregarded entity's name on line 2, "Business name/disregarded entity name." If the owner of the disregarded entity is a foreign person, the owner must complete an appropriate Form W-8 instead of a Form W-9. This is the case even if the foreign person has a U.S. TIN.

Line 2

If you have a business name, trade name, DBA name, or disregarded entity name, you may enter it on line 2.

Line 3

Check the appropriate box in line 3 for the U.S. federal tax classification of the person whose name is entered on line 1. Check only one box in line 3.

Limited Liability Company (LLC). If the name on line 1 is an LLC treated as a partnership for U.S. federal tax purposes, check the "Limited Liability Company" box and enter "P" in the space provided. If the LLC has filed Form 8832 or 2553 to be taxed as a corporation, check the "Limited Liability Company" box and in the space provided enter "C" for C corporation or "S" for S corporation. If it is a single-member LLC that is a disregarded entity, do not check the "Limited Liability Company" box; instead check the first box in line 3 "Individual/sole proprietor or single-member LLC."

Line 4, Exemptions

If you are exempt from backup withholding and/or FATCA reporting, enter in the appropriate space in line 4 any code(s) that may apply to you.

Exempt payee code.

- Generally, individuals (including sole proprietors) are not exempt from backup withholding.
- Except as provided below, corporations are exempt from backup withholding for certain payments, including interest and dividends.
- Corporations are not exempt from backup withholding for payments made in settlement of payment card or third party network transactions.
- Corporations are not exempt from backup withholding with respect to attorneys' fees or gross proceeds paid to attorneys, and corporations that provide medical or health care services are not exempt with respect to payments reportable on Form 1099-MISC.

The following codes identify payees that are exempt from backup withholding. Enter the appropriate code in the space in line 4.

1—An organization exempt from tax under section 501(a), any IRA, or a custodial account under section 403(b)(7) if the account satisfies the requirements of section 401(f)(2)

2—The United States or any of its agencies or instrumentalities

3—A state, the District of Columbia, a U.S. commonwealth or possession, or any of their political subdivisions or instrumentalities

4—A foreign government or any of its political subdivisions, agencies, or instrumentalities

5—A corporation

6—A dealer in securities or commodities required to register in the United States, the District of Columbia, or a U.S. commonwealth or possession

7—A futures commission merchant registered with the Commodity Futures Trading Commission

8—A real estate investment trust

9—An entity registered at all times during the tax year under the Investment Company Act of 1940

10—A common trust fund operated by a bank under section 584(a)

11—A financial institution

12—A middleman known in the investment community as a nominee or custodian

13—A trust exempt from tax under section 664 or described in section 4947

The following chart shows types of payments that may be exempt from backup withholding. The chart applies to the exempt payees listed above, 1 through 13.

IF the payment is for . . .	THEN the payment is exempt for . . .
Interest and dividend payments	All exempt payees except for 7
Broker transactions	Exempt payees 1 through 4 and 6 through 11 and all C corporations. S corporations must not enter an exempt payee code because they are exempt only for sales of noncovered securities acquired prior to 2012.
Barter exchange transactions and patronage dividends	Exempt payees 1 through 4
Payments over $600 required to be reported and direct sales over $5,000[1]	Generally, exempt payees 1 through 5[2]
Payments made in settlement of payment card or third party network transactions	Exempt payees 1 through 4

[1] See Form 1099-MISC, Miscellaneous Income, and its instructions.

[2] However, the following payments made to a corporation and reportable on Form 1099-MISC are not exempt from backup withholding: medical and health care payments, attorneys' fees, gross proceeds paid to an attorney reportable under section 6045(f), and payments for services paid by a federal executive agency.

Exemption from FATCA reporting code. The following codes identify payees that are exempt from reporting under FATCA. These codes apply to persons submitting this form for accounts maintained outside of the United States by certain foreign financial institutions. Therefore, if you are only submitting this form for an account you hold in the United States, you may leave this field blank. Consult with the person requesting this form if you are uncertain if the financial institution is subject to these requirements. A requester may indicate that a code is not required by providing you with a Form W-9 with "Not Applicable" (or any similar indication) written or printed on the line for a FATCA exemption code.

A—An organization exempt from tax under section 501(a) or any individual retirement plan as defined in section 7701(a)(37)

B—The United States or any of its agencies or instrumentalities

C—A state, the District of Columbia, a U.S. commonwealth or possession, or any of their political subdivisions or instrumentalities

D—A corporation the stock of which is regularly traded on one or more established securities markets, as described in Regulations section 1.1472-1(c)(1)(i)

E—A corporation that is a member of the same expanded affiliated group as a corporation described in Regulations section 1.1472-1(c)(1)(i)

F—A dealer in securities, commodities, or derivative financial instruments (including notional principal contracts, futures, forwards, and options) that is registered as such under the laws of the United States or any state

G—A real estate investment trust

H—A regulated investment company as defined in section 851 or an entity registered at all times during the tax year under the Investment Company Act of 1940

I—A common trust fund as defined in section 584(a)

J—A bank as defined in section 581

K—A broker

L—A trust exempt from tax under section 664 or described in section 4947(a)(1)

M—A tax exempt trust under a section 403(b) plan or section 457(g) plan

Note. You may wish to consult with the financial institution requesting this form to determine whether the FATCA code and/or exempt payee code should be completed.

Line 5

Enter your address (number, street, and apartment or suite number). This is where the requester of this Form W-9 will mail your information returns.

Line 6

Enter your city, state, and ZIP code.

Part I. Taxpayer Identification Number (TIN)

Enter your TIN in the appropriate box. If you are a resident alien and you do not have and are not eligible to get an SSN, your TIN is your IRS individual taxpayer identification number (ITIN). Enter it in the social security number box. If you do not have an ITIN, see *How to get a TIN* below.

If you are a sole proprietor and you have an EIN, you may enter either your SSN or EIN. However, the IRS prefers that you use your SSN.

If you are a single-member LLC that is disregarded as an entity separate from its owner (see *Limited Liability Company (LLC)* on this page), enter the owner's SSN (or EIN, if the owner has one). Do not enter the disregarded entity's EIN. If the LLC is classified as a corporation or partnership, enter the entity's EIN.

Note. See the chart on page 4 for further clarification of name and TIN combinations.

How to get a TIN. If you do not have a TIN, apply for one immediately. To apply for an SSN, get Form SS-5, Application for a Social Security Card, from your local SSA office or get this form online at *www.ssa.gov*. You may also get this form by calling 1-800-772-1213. Use Form W-7, Application for IRS Individual Taxpayer Identification Number, to apply for an ITIN, or Form SS-4, Application for Employer Identification Number, to apply for an EIN. You can apply for an EIN online by accessing the IRS website at *www.irs.gov/businesses* and clicking on Employer Identification Number (EIN) under Starting a Business. You can get Forms W-7 and SS-4 from the IRS by visiting IRS.gov or by calling 1-800-TAX-FORM (1-800-829-3676).

If you are asked to complete Form W-9 but do not have a TIN, apply for a TIN and write "Applied For" in the space for the TIN, sign and date the form, and give it to the requester. For interest and dividend payments, and certain payments made with respect to readily tradable instruments, generally you will have 60 days to get a TIN and give it to the requester before you are subject to backup withholding on payments. The 60-day rule does not apply to other types of payments. You will be subject to backup withholding on all such payments until you provide your TIN to the requester.

Note. Entering "Applied For" means that you have already applied for a TIN or that you intend to apply for one soon.

Caution: *A disregarded U.S. entity that has a foreign owner must use the appropriate Form W-8.*

Part II. Certification

To establish to the withholding agent that you are a U.S. person, or resident alien, sign Form W-9. You may be requested to sign by the withholding agent even if items 1, 4, or 5 below indicate otherwise.

For a joint account, only the person whose TIN is shown in Part I should sign (when required). In the case of a disregarded entity, the person identified on line 1 must sign. Exempt payees, see *Exempt payee code* earlier.

Signature requirements. Complete the certification as indicated in items 1 through 5 below.

1. Interest, dividend, and barter exchange accounts opened before 1984 and broker accounts considered active during 1983. You must give your correct TIN, but you do not have to sign the certification.

2. Interest, dividend, broker, and barter exchange accounts opened after 1983 and broker accounts considered inactive during 1983. You must sign the certification or backup withholding will apply. If you are subject to backup withholding and you are merely providing your correct TIN to the requester, you must cross out item 2 in the certification before signing the form.

3. Real estate transactions. You must sign the certification. You may cross out item 2 of the certification.

4. Other payments. You must give your correct TIN, but you do not have to sign the certification unless you have been notified that you have previously given an incorrect TIN. "Other payments" include payments made in the course of the requester's trade or business for rents, royalties, goods (other than bills for merchandise), medical and health care services (including payments to corporations), payments to a nonemployee for services, payments made in settlement of payment card and third party network transactions, payments to certain fishing boat crew members and fishermen, and gross proceeds paid to attorneys (including payments to corporations).

5. Mortgage interest paid by you, acquisition or abandonment of secured property, cancellation of debt, qualified tuition program payments (under section 529), IRA, Coverdell ESA, Archer MSA or HSA contributions or distributions, and pension distributions. You must give your correct TIN, but you do not have to sign the certification.

What Name and Number To Give the Requester

For this type of account:	Give name and SSN of:
1. Individual	The individual
2. Two or more individuals (joint account)	The actual owner of the account or, if combined funds, the first individual on the account[1]
3. Custodian account of a minor (Uniform Gift to Minors Act)	The minor[2]
4. a. The usual revocable savings trust (grantor is also trustee) b. So-called trust account that is not a legal or valid trust under state law	The grantor-trustee[1] The actual owner[1]
5. Sole proprietorship or disregarded entity owned by an individual	The owner[3]
6. Grantor trust filing under Optional Form 1099 Filing Method 1 (see Regulations section 1.671-4(b)(2)(i)(A))	The grantor*
For this type of account:	**Give name and EIN of:**
7. Disregarded entity not owned by an individual	The owner
8. A valid trust, estate, or pension trust	Legal entity[4]
9. Corporation or LLC electing corporate status on Form 8832 or Form 2553	The corporation
10. Association, club, religious, charitable, educational, or other tax-exempt organization	The organization
11. Partnership or multi-member LLC	The partnership
12. A broker or registered nominee	The broker or nominee
13. Account with the Department of Agriculture in the name of a public entity (such as a state or local government, school district, or prison) that receives agricultural program payments	The public entity
14. Grantor trust filing under the Form 1041 Filing Method or the Optional Form 1099 Filing Method 2 (see Regulations section 1.671-4(b)(2)(i)(B))	The trust

[1] List first and circle the name of the person whose number you furnish. If only one person on a joint account has an SSN, that person's number must be furnished.

[2] Circle the minor's name and furnish the minor's SSN.

[3] You must show your individual name and you may also enter your business or DBA name on the "Business name/disregarded entity" name line. You may use either your SSN or EIN (if you have one), but the IRS encourages you to use your SSN.

[4] List first and circle the name of the trust, estate, or pension trust. (Do not furnish the TIN of the personal representative or trustee unless the legal entity itself is not designated in the account title.) Also see *Special rules for partnerships* on page 2.

*Note. Grantor also must provide a Form W-9 to trustee of trust.

Note. If no name is circled when more than one name is listed, the number will be considered to be that of the first name listed.

Secure Your Tax Records from Identity Theft

Identity theft occurs when someone uses your personal information such as your name, SSN, or other identifying information, without your permission, to commit fraud or other crimes. An identity thief may use your SSN to get a job or may file a tax return using your SSN to receive a refund.

To reduce your risk:

- Protect your SSN,
- Ensure your employer is protecting your SSN, and
- Be careful when choosing a tax preparer.

If your tax records are affected by identity theft and you receive a notice from the IRS, respond right away to the name and phone number printed on the IRS notice or letter.

If your tax records are not currently affected by identity theft but you think you are at risk due to a lost or stolen purse or wallet, questionable credit card activity or credit report, contact the IRS Identity Theft Hotline at 1-800-908-4490 or submit Form 14039.

For more information, see Publication 4535, Identity Theft Prevention and Victim Assistance.

Victims of identity theft who are experiencing economic harm or a system problem, or are seeking help in resolving tax problems that have not been resolved through normal channels, may be eligible for Taxpayer Advocate Service (TAS) assistance. You can reach TAS by calling the TAS toll-free case intake line at 1-877-777-4778 or TTY/TDD 1-800-829-4059.

Protect yourself from suspicious emails or phishing schemes. Phishing is the creation and use of email and websites designed to mimic legitimate business emails and websites. The most common act is sending an email to a user falsely claiming to be an established legitimate enterprise in an attempt to scam the user into surrendering private information that will be used for identity theft.

The IRS does not initiate contacts with taxpayers via emails. Also, the IRS does not request personal detailed information through email or ask taxpayers for the PIN numbers, passwords, or similar secret access information for their credit card, bank, or other financial accounts.

If you receive an unsolicited email claiming to be from the IRS, forward this message to *phishing@irs.gov*. You may also report misuse of the IRS name, logo, or other IRS property to the Treasury Inspector General for Tax Administration (TIGTA) at 1-800-366-4484. You can forward suspicious emails to the Federal Trade Commission at: *spam@uce.gov* or contact them at *www.ftc.gov/idtheft* or 1-877-IDTHEFT (1-877-438-4338).

Visit IRS.gov to learn more about identity theft and how to reduce your risk.

Privacy Act Notice

Section 6109 of the Internal Revenue Code requires you to provide your correct TIN to persons (including federal agencies) who are required to file information returns with the IRS to report interest, dividends, or certain other income paid to you; mortgage interest you paid; the acquisition or abandonment of secured property; the cancellation of debt; or contributions you made to an IRA, Archer MSA, or HSA. The person collecting this form uses the information on the form to file information returns with the IRS, reporting the above information. Routine uses of this information include giving it to the Department of Justice for civil and criminal litigation and to cities, states, the District of Columbia, and U.S. commonwealths and possessions for use in administering their laws. The information also may be disclosed to other countries under a treaty, to federal and state agencies to enforce civil and criminal laws, or to federal law enforcement and intelligence agencies to combat terrorism. You must provide your TIN whether or not you are required to file a tax return. Under section 3406, payers must generally withhold a percentage of taxable interest, dividend, and certain other payments to a payee who does not give a TIN to the payer. Certain penalties may also apply for providing false or fraudulent information.

Certification
Regarding Debarment, Suspension and Ineligibility

As is required by the Federal Regulations Implementing Executive Order 12549, Debarment and Suspension, 45 CFR Part 76, Government-wide Debarment and Suspension, the applicant certifies, to the best of his or her knowledge and belief, that both it and its principals:

a. Are not presently debarred, suspended, proposed for debarment, declared ineligible, or voluntarily excluded from participation in this transaction by any federal department or agency;

b. Have not within a three-year period preceding this bid proposal and/or application been convicted of or had a civil judgment rendered against them for commission of fraud or a criminal offense in connection with obtaining, attempting to obtain, or performing a public (federal, state, or local) transaction or contract under a public transaction, violation of federal or state antitrust statutes or commission of embezzlement, theft, forgery, bribery, falsification or destruction of records, making false statements, or receiving stolen property;

c. Are not presently indicted for or otherwise criminally or civilly charged by a government entity with commission of any of the offenses enumerated herein; and

d. Have not within a three-year period preceding this bid proposal and/or application had one or more public transactions terminated for cause or default.

Signature:_____
Print Name:_____
Title:_____
Telephone Number:_____
Date:_____

If the bidder is unable to certify to all of the statements in this Certification, such bidder should attach an explanation to this proposal.

APPENDIX A

During the performance of this contract, the contractor, for itself, its assignees, and successors in interest (hereinafter referred to as the "contractor") agrees as follows:

1. **Compliance with Regulations**: The contractor (hereinafter includes consultants)will comply with the Acts and the Regulations relative to Nondiscrimination in Federally-assisted programs of the U.S. Department of Transportation, the Federal Highway Administration, as they may be amended from time to time, which are herein incorporated by reference and made a part of this contract.

2. **Nondiscrimination**: The contractor, with regard to the work performed by it during the contract, will not discriminate on the grounds of race, color, or national origin in the selection and retention of subcontractors, including procurements of materials and leases of equipment. The contractor will not participate directly or indirectly in the discrimination prohibited by the Acts and the Regulations, including employment practices when the contract covers any activity, project, or program set forth in Appendix B of49 CFR Part 21.

3. **Solicitations for Subcontracts, Including Procurements of Materials and Equipment**: In all solicitations, either by competitive bidding, or negotiation made by the contractor for work to be performed under a subcontract, including procurements of materials, or leases of equipment, each potential subcontractor or supplier will be notified by the contractor of the contractor's obligations under this contract and the Acts and the Regulations relative to Nondiscrimination on the grounds of race, color, or national origin.

4. **Information and Reports**: The contractor will provide all information and reports required by the Acts, the Regulations, and directives issued pursuant thereto and will permit access to its books, records, accounts, other sources of information, and its facilities as may be determined by the Recipient or the Federal Highway Administration to be pertinent to ascertain compliance with such Acts, Regulations, and instructions. Where any information required of a contractor is in the exclusive possession of another who fails or refuses to furnish the information, the contractor will so certify to the Recipient or the Federal Highway Administration, as appropriate, and will set forth what efforts it has made to obtain the information.

5. **Sanctions for Noncompliance**: In the event of a contractor's noncompliance with the Nondiscrimination provisions of this contract, the Recipient will impose such contract sanctions as it or the Federal Highway Administration may determine to be appropriate, including, but not limited to:

   a. withholding payments to the contractor under the contract until the contractor complies; and/or
   b. cancelling, terminating, or suspending contract, in whole or in part.

6. **Incorporation of Provisions**: The contractor will include the provisions of paragraphs one through six in every subcontract, including procurements of materials and leases of equipment, unless exempt by the Acts, the Regulations and directives issued pursuant thereto. The contractor will take action with respect to any subcontract or procurement as the Recipient or the Federal Highway Administration may direct as a means of enforcing such provisions including sanctions for noncompliance. Provided, that if the contractor becomes involved in, or is threatened with litigation by a subcontractor, or supplier because of such direction, the contractor may request the Recipient to enter into any litigation to protect the interests of the Recipient. In addition, the contractor may request the United States to enter into the litigation to protect the interests of the United States.

APPENDIX B

CLAUSES FOR DEEDS TRANSFERRING UNITED STATES PROPERTY

The following clauses will be included in deeds effecting or recording the transfer of real property, structures, or improvements thereon, or granting interest therein from the United States pursuant to the provisions of Assurance 4:

NOW, THEREFORE, the U.S. Department of Transportation as authorized by law and upon the condition that the **COUNTY OF HIDALGO** will accept title to the lands and maintain the project constructed thereon in accordance with all applicable federal statutes, the Regulations for the Administration of all Department of Transportation programs, and the policies and procedures prescribed by the Federal Highway Administration of the U.S. Department of Transportation in accordance and in compliance with all requirements imposed by Title 49, Code of Federal Regulations, U.S. Department of Transportation, Subtitle A, Office of the Secretary, Part 21, Nondiscrimination in Federally-assisted programs of the U.S. Department of Transportation pertaining to and effectuating the provisions of Title VI of the Civil Rights Act of 1964 (78 Stat. 252; 42 U.S.C. § 2000d to 2000d-4), does hereby remise, release, quitclaim and convey unto the **COUNTY OF HIDALGO** all the right, title and interest of the U.S. Department of Transportation in and to said lands described in Exhibit 1 attached hereto and made a part hereof.

(HABENDUM CLAUSE)

TO HAVE AND TO HOLD said lands and interests therein unto **COUNTY OF HIDALGO** and its successors forever, subject, however, to the covenants, conditions, restrictions and reservations herein contained as follows, which will remain in effect for the period during which the real property or structures are used for a purpose for which Federal financial assistance is extended or for another purpose involving the provision of similar services or benefits and will be binding on the **COUNTY OF HIDALGO**, its successors and assigns.

The **COUNTY OF HIDALGO**, in consideration of the conveyance of said lands and interests in lands, does hereby covenant and agree as a covenant running with the land for itself, its successors and assigns, that (1) no person will on the grounds of race, color, or national origin, be excluded from participation in, be denied the benefits of, or be otherwise subjected to discrimination with regard to any facility located wholly or in part on, over ,or under such lands hereby conveyed [,] [and]* (2) that the **COUNTY OF HIDALGO** will use the lands and interests in lands and interests in lands so conveyed, in compliance with all requirements imposed by or pursuant to Title 49, Code of Federal Regulations, U.S. Department of Transportation, Subtitle A, Office of the Secretary, Part 21, Nondiscrimination in Federally-assisted programs of the U.S. Department of Transportation, Effectuation of Title VI of the Civil Rights Act of 1964, and as said Regulations and Acts may be amended[, and(3) that in the event of breach of any of the above-mentioned nondiscrimination conditions, the Department will have a right to enter or re-enter said lands and facilities on said land ,and that above described land and facilities will thereon revert to and vest in and become the absolute property of the U.S. Department of Transportation and its assigns as such interest existed prior to this instruction].*

(*Reverted clause and related language to be used only when it is determined that such a clause is necessary in order to make clear the purpose of Title VI.)

APPENDIX C

CLAUSES FOR TRANSFER OF REAL PROPERTY ACQUIRED OR IMPROVED UNDER THE ACTIVITY, FACILITY, OR PROGRAM

The following clauses will be included in deeds, licenses, leases, permits, or similar instruments entered into by the **COUNTY OF HIDALGO** pursuant to the provisions of Assurance 7(a):

A. The (grantee, lessee, permittee, etc. as appropriate) for himself/herself, his/her heirs, personal representatives, successors in interest, and assigns, as a part of the consideration hereof, does hereby covenant and agree [in the case of deeds and leases add "as a covenant running with the land"] that:

1. In the event facilities are constructed, maintained, or otherwise operated on the property described in this (deed, license, lease, permit, etc.) for a purpose for which a U.S. Department of Transportation activity, facility, or program is extended or for another purpose involving the provision of similar services or benefits, the (grantee, licensee, lessee, permitted, etc.) will maintain and operate such facilities and services in compliance with all requirements imposed by the Acts and Regulations (as may be amended)such that no person on the grounds of race, color, or national origin, will be excluded from participation in, denied the benefits of, or be otherwise subjected to discrimination in the use of said facilities.

B. With respect to licenses, leases, permits, etc., in the event of breach of any of the above Nondiscrimination covenants, **COUNTY OF HIDALGO** will have the right to terminate the (lease, license, permit, etc.) and to enter, re-enter, and repossess said lands and facilities thereon, and hold the same as if the (lease, license, permit, etc.) had never been made or issued.*

C. With respect to a deed, in the event of breach of any of the above Nondiscrimination covenants, the **COUNTY OF HIDALGO** will have the right to enter or re-enter the lands and facilities thereon, and the above described lands and facilities will there upon revert to and vest in and become the absolute property of the **COUNTY OF HIDALGO** and its assigns.*

(*Reverted clause and related language to be used only when it is determined that such a clause is necessary in order to make clear the purpose of Title VI.)

APPENDIX D

CLAUSES FOR CONSTRUCTION/USE/ACCESS TO REAL PROPERTY ACQUIRED UNDER THE ACTIVITY, FACILITY OR PROGRAM

The following clauses will be included in deeds, licenses, permits, or similar instruments/agreements entered into by **COUNTY OF HIDALGO** pursuant to the provisions of Assurance 7(b):

A. The (grantee, licensee, permittee, etc., as appropriate) for himself/herself, his/her heirs, personal representatives, successors in interest, and assigns, as a part of the consideration hereof, does hereby covenant and agree (in the case of deeds and leases add, "as a covenant running with the land") that (1) no person on the ground of race, color ,or national origin, will be excluded from participation in, denied the benefits of, or be otherwise subjected to discrimination in the use of said facilities, (2) that in the construction of any improvements on, over, or under such land, and the furnishing of services thereon, no person on the ground of race, color, or national origin, will be excluded from participation in, denied the benefits of, or otherwise be subjected to discrimination, (3) that the (grantee, licensee, lessee, permittee, etc.) will use the premises in compliance with all other requirements imposed by or pursuant to the Acts and Regulations, as amended, set forth in this Assurance.

B. With respect to (licenses, leases, permits, etc.), in the event of breach of any of the above Nondiscrimination covenants, **COUNTY OF HIDALGO** will have the right to terminate the (license, permit, etc., as appropriate) and to enter or re-enter and repossess said land and the facilities thereon, and hold the same as if said(license, permit, etc., as appropriate) had never been made or issued.*

C. With respect to deeds, in the event of breach of any of the above Nondiscrimination covenants, **COUNTY OF HIDALGO** will there upon revert to and vest in and become the absolute property of **COUNTY OF HIDALGO** and its assigns.*

(*Reverted clause and related language to be used only when it is determined that such a clause is necessary in order to make clear the purpose of Title VI.)

APPENDIX E

During the performance of this contract, the contractor, for itself, its assignees, and successors in interest (hereinafter referred to as the "contractor") agrees to comply with the following nondiscrimination statutes and authorities; including but not limited to:

Pertinent Nondiscrimination Authorities:

- Title VI of the Civil Rights Act of 1964 (42 U.S.C. § 2000d et seq., 78 stat. 252), (prohibits discrimination on the basis of race, color, national origin); and 49CFR Part 21.
- The Uniform Relocation Assistance and Real Property Acquisition Policies Act of1970, (42U.S.C. § 4601), (prohibits unfair treatment of persons displaced or whose property has been acquired because of Federal or Federal-aid programs and projects);
- Federal-Aid Highway Act of 1973, (23U.S.C. § 324et seq.), (prohibits discrimination on the basis of sex);
- Section 504 of the Rehabilitation Act of 1973, (29U.S.C. § 794 et seq.), as amended, (prohibits discrimination on the basis of disability); and 49CFRPart 27;
- The Age Discrimination Act of 1975, as amended,(42U.S.C. § 6101 et seq.), (prohibits discrimination on the basis of age);
- Airport and Airway Improvement Act of 1982, (49U.S.C. § 4 71, Section 4 7123),as amended, (prohibits discrimination based on race, creed, color, national origin, or sex);
- The Civil Rights Restoration Act of 1987,(PL 100-209), (Broadened the scope, coverage and applicability of Title VI of the Civil Rights Act of 1964, The Age Discrimination Act of 1975 and Section 504 of the Rehabilitation Act of 1973, by expanding the definition of the terms "programs or activities" to include all of the programs or activities of the Federal-aid recipients, sub recipients and contractors, whether such programs or activities are Federally funded or not);
- Titles II and III of the Americans with Disabilities Act, which prohibit discrimination on the basis of disability in the operation of public entities, public and private transportation systems, places of public accommodation, and certain testing entities (42 U.S.C. §§ 12131-12189)as implemented by Department of Transportation regulations at 49C.F.R. parts 37 and 38;
- The Federal Aviation Administration's Nondiscrimination statute (49U.S.C. § 47123) (prohibits discrimination on the basis of race, color, national origin, and sex);
- Executive Order 12898, Federal Actions to Address Environmental Justice in Minority Populations and Low-Income Populations, which ensures discrimination against minority populations by discouraging programs, policies, and activities with disproportionately high and adverse human health or environmental effects on minority and low-income populations;
- Executive Order 13166, Improving Access to Services for Persons with Limited English Proficiency, and resulting agency guidance, national origin discrimination includes discrimination because of limited English proficiency (LEP). To ensure compliance with Title VI, you must take reasonable steps to ensure that LEP persons have meaningful access to your programs (70 Fed. Reg. at 74087 to 74100);
- Title IX of the Education Amendments of1972, as amended, which prohibits you from discriminating because of sex in education programs or activities (20 U .S.C. 1681 et seq).

EXHIBIT "B"

VENDOR'S BID PRICE & TABULATION

OPENED
9:54 4-12-17

Witnessed

EXHIBIT "B"

BID PAGE

Hidalgo County

"RENTAL INDUSTRIAL UNIFORMS"

Bid No. 2017-045-03-29-SMA

Bid prices to include all environmental fees, delivery fees, prep fees, installation fees, setup fees, measurement fees and emblems charges; not only for the initial order, but also for employees added anytime during the contract period or any extension period. NO EXTRA OR ADDITIONAL CHARGES WILL BE ALLOWED TO SUCCESSFUL BIDDER.

	ITEM DESCRIPTION		OPTION 1 *Full Service* Weekly rate rental per employee	OPTION 2 *Value Lease* Weekly rate per employee	Price For Lost Garment
1.	**SHIRTS-** Industrial (Men & Women) 65% Polyester 35% Cotton	Long sleeve	1.54	.84	12.00
		Short sleeve	1.54	.84	12.00
2.	**SHIRTS**- Industrial (Men & Women) 100% cotton	Long sleeve	2.46	1.35	13.00
		Short sleeve	2.46	1.35	13.00
3.	**SHIRTS**- Industrial (Men & Women) Reflective & Fluorescent Green Stripes on the sleeves, Front pockets & back of the Shirt 65% Polyester 35% Cotton	Long sleeve	3.26	1.78	16.00
		Short sleeve	3.26	1.78	16.00
4.	**SHIRTS**- Industrial (Men & Women) Reflective & Fluorescent Green Stripes on the sleeves, Front pockets & back of the Shirt 100% Polyester	Long sleeve	3.52	1.92	35.00
		Short sleeve	3.52	1.92	35.00
5.	**SHIRTS**- (Men & Women) **High-Visibility (ansi-complaint) Class 3 work shirt** Reflective striping on the sleeves & body, button-chest pockets with pencil stall, stain release and moisture control, ANSI/SEA 107-2010 class 3 certified, 100 polyester poplin	Long sleeve	3.52	1.92	35.00
		Short sleeve	3.52	1.92	35.00
6.	**SHIRTS- Executive Style (Men)** 65% Polyester 35% Cotton		2.37	1.32	13.00
7.	**POLO SHIRTS (men & women)** 50% Polyester 50% Cotton		N/A	N/A	
8.	**POLO SHIRTS (men & women)** 100% Polyester		2.37	1.32	13.00
9.	**SHORT SLEEVE SMOCK (women)** 80 % Polyester 20% Cotton poplin		1.54	.84	12.00
10.	**TROUSERS-Industrial (men)** 65% Polyester 35% Cotton		2.20	1.20	13.90
11.	**TROUSERS-**INDUSTRIAL (WOMEN) 65% Polyester 35% Cotton		2.20	1.20	13.90
12.	**EXECUTIVE PANTS** (Men) *must be available for Supervisory positions as requested by dept. 65% Polyester 35% Cotton		2.53	1.38	15.00
13.	**PANTS-(MEN)** 100% rip stop cotton pants military-grade heavyweight 10-oz		N/A	N/A	
14.	**PANTS-**Performance Shop 54% polyester, 42% cotton, 2% spandex		N/A	N/A	

15.	**DENIM BLUE JEANS-** 100% Cotton- (MEN) (Boot Cut, Flare & Straight Leg)13.75oz-14 oz. Denim	2.86	1.56	16.00
16.	**SHORTS-** Uniform (Men) 65% Polyester/35% Cotton	2.20	1.20	13.00
17.	**SHORTS-** Uniform (Women) 65% Polyester/35% Cotton	2.20	1.20	13.00
18.	**COVERALLS-** 65% Polyester 35% Cotton	3.30	1.80	16.00
19.	**PATCHES AND/OR LOGOs**-- one time charge for Shirt	1.00	1.00	
20.	**ADDITIONAL FEES** (if any):			
	Preparation Fee	1.00	1.00	

ACKNOWLEDGMENT FORM

I/We the undersigned hereby certify that I/We am/are a duly authorized official of the company and have the authority to sign on behalf of the company and assure that all statements made in the bid are true. I/We agree to furnish and deliver the specified items/services at the prices stated herein, and have read, understand, and agree to the terms and conditions contained herein and on all of the attachments.

Bidder /Company's Name: Unifirst Holdings

Address: 515 E Beech Ave

City/State/Zip Code: Mcallen TX 78501

Phone Number/: 956-686-0218

Cellular Number:

Fax Number:

Authorized Signature: Edgar Segovia

Email Address: Edgar-Segovia@Un.first.com

Printed Name: Edgar Segovia

Title: District Service Manager

Date: 3/28/17

EXHIBIT "C"

INSURANCE REQUIREMENTS

ACORD®

CERTIFICATE OF LIABILITY INSURANCE

DATE (MM/DD/YYYY): 05/08/2017

THIS CERTIFICATE IS ISSUED AS A MATTER OF INFORMATION ONLY AND CONFERS NO RIGHTS UPON THE CERTIFICATE HOLDER. THIS CERTIFICATE DOES NOT AFFIRMATIVELY OR NEGATIVELY AMEND, EXTEND OR ALTER THE COVERAGE AFFORDED BY THE POLICIES BELOW. THIS CERTIFICATE OF INSURANCE DOES NOT CONSTITUTE A CONTRACT BETWEEN THE ISSUING INSURER(S), AUTHORIZED REPRESENTATIVE OR PRODUCER, AND THE CERTIFICATE HOLDER.

IMPORTANT: If the certificate holder is an ADDITIONAL INSURED, the policy(ies) must have ADDITIONAL INSURED provisions or be endorsed. If SUBROGATION IS WAIVED, subject to the terms and conditions of the policy, certain policies may require an endorsement. A statement on this certificate does not confer rights to the certificate holder in lieu of such endorsement(s).

PRODUCER Willis of Massachusetts, Inc. c/o 26 Century Blvd P.O. Box 305191 Nashville, TN 372305191 USA	CONTACT NAME: PHONE (A/C, No, Ext): 1-877-945-7378 FAX (A/C, No): 1-888-467-2378 E-MAIL ADDRESS: certificates@willis.com
INSURED UniFirst Corporation and its Subsidiaries 68 Jonspin Road Wilmington, MA 018871086	INSURER(S) AFFORDING COVERAGE — NAIC # INSURER A : ACE American Insurance Company — 22667 INSURER B : Indemnity Insurance Company of North America — 43575 INSURER C : INSURER D : INSURER E : INSURER F :

COVERAGES **CERTIFICATE NUMBER:** W2227621 **REVISION NUMBER:**

THIS IS TO CERTIFY THAT THE POLICIES OF INSURANCE LISTED BELOW HAVE BEEN ISSUED TO THE INSURED NAMED ABOVE FOR THE POLICY PERIOD INDICATED. NOTWITHSTANDING ANY REQUIREMENT, TERM OR CONDITION OF ANY CONTRACT OR OTHER DOCUMENT WITH RESPECT TO WHICH THIS CERTIFICATE MAY BE ISSUED OR MAY PERTAIN, THE INSURANCE AFFORDED BY THE POLICIES DESCRIBED HEREIN IS SUBJECT TO ALL THE TERMS, EXCLUSIONS AND CONDITIONS OF SUCH POLICIES. LIMITS SHOWN MAY HAVE BEEN REDUCED BY PAID CLAIMS.

INSR LTR	TYPE OF INSURANCE	ADDL INSD	SUBR WVD	POLICY NUMBER	POLICY EFF (MM/DD/YYYY)	POLICY EXP (MM/DD/YYYY)	LIMITS		
A	X COMMERCIAL GENERAL LIABILITY CLAIMS-MADE [X] OCCUR GEN'L AGGREGATE LIMIT APPLIES PER: POLICY PRO-JECT [X] LOC OTHER:	Y	Y	HDOG27858752	10/01/2016	10/01/2017	EACH OCCURRENCE DAMAGE TO RENTED PREMISES (Ea occurrence) MED EXP (Any one person) PERSONAL & ADV INJURY GENERAL AGGREGATE PRODUCTS - COMP/OP AGG	$ $ $ $ $ $	1,000,000 1,000,000 5,000 1,000,000 2,000,000 2,000,000
A	AUTOMOBILE LIABILITY X ANY AUTO OWNED AUTOS ONLY HIRED AUTOS ONLY SCHEDULED AUTOS NON-OWNED AUTOS ONLY	Y	Y	ISAH09051284	10/01/2016	10/01/2017	COMBINED SINGLE LIMIT (Ea accident) BODILY INJURY (Per person) BODILY INJURY (Per accident) PROPERTY DAMAGE (Per accident)	$ $ $ $	2,000,000
	UMBRELLA LIAB OCCUR EXCESS LIAB CLAIMS-MADE DED RETENTION $						EACH OCCURRENCE AGGREGATE	$ $	
B	WORKERS COMPENSATION AND EMPLOYERS' LIABILITY ANY PROPRIETOR/PARTNER/EXECUTIVE OFFICER/MEMBER EXCLUDED? Y/N No (Mandatory in NH) If yes, describe under DESCRIPTION OF OPERATIONS below	N/A	Y	WLRC49104261 (AOS)	10/01/2016	10/01/2017	X PER STATUTE OTH-ER E.L. EACH ACCIDENT E.L. DISEASE - EA EMPLOYEE E.L. DISEASE - POLICY LIMIT	$ $ $	1,000,000 1,000,000 1,000,000
A	Work Comp & Emp Liab		Y	WLRC4910425A (AZ, CA)	10/01/2016	10/01/2017	See Attached		

DESCRIPTION OF OPERATIONS / LOCATIONS / VEHICLES (ACORD 101, Additional Remarks Schedule, may be attached if more space is required)

Division/Location: 813 - McAllen, TX.

Certificate Holder is an Additional Insured for General Liability and Auto Liability as their interest may appear if required by written contract but only with respect to liability arising out of operations of the Named Insured.

It is understood and agreed that the Company waives its right of subrogation against the Additional Insured which may

CERTIFICATE HOLDER

Hidalgo County
Attn: Darlene Betancourt, Purchasing Dept.
2812 S Business Highway 281
Edinburg, TX 78539

CANCELLATION

SHOULD ANY OF THE ABOVE DESCRIBED POLICIES BE CANCELLED BEFORE THE EXPIRATION DATE THEREOF, NOTICE WILL BE DELIVERED IN ACCORDANCE WITH THE POLICY PROVISIONS.

AUTHORIZED REPRESENTATIVE

Julia M Powers

© 1988-2015 ACORD CORPORATION. All rights reserved.

The ACORD name and logo are registered marks of ACORD

AGENCY CUSTOMER ID: _____

LOC #: _____

ADDITIONAL REMARKS SCHEDULE

AGENCY	NAMED INSURED
Willis of Massachusetts, Inc.	UniFirst Corporation and its Subsidiaries 68 Jonspin Road Wilmington, MA 018871086
POLICY NUMBER See Page 1	
CARRIER See Page 1 / NAIC CODE See Page 1	EFFECTIVE DATE: See Page 1

ADDITIONAL REMARKS

THIS ADDITIONAL REMARKS FORM IS A SCHEDULE TO ACORD FORM,

FORM NUMBER: 25 FORM TITLE: Certificate of Liability Insurance

arise by reason of a payment of claim under all the policies, if required by written contract and as permitted by law.

Additional Insured: Hidalgo County.
UniFirst Holdings, Inc. is a subsidiary of UniFirst Corporation.

© 2008 ACORD CORPORATION. All rights reserved.

The ACORD name and logo are registered marks of ACORD

ADDITIONAL COVERAGE SCHEDULE

COVERAGE	LIMITS
POLICY TYPE: Workers Compensation and Employers Liability CARRIER: ACE American Insurance Company POLICY TERM: 10/01/2016 - 10/01/2017 POLICY NUMBER: WLRC4910425A (AZ, CA)	Per Statute $1,000,000 E.L. Each Accident $1,000,000 E.L. Disease - Policy Limit $1,000,000 E.L. Disease - Each Employee
POLICY TYPE: Workers Compensation and Employers Liability CARRIER: ACE American Insurance Company POLICY TERM: 10/01/2016 - 10/01/2017 POLICY NUMBER: WCUC49104248 (MA, ME, OH)	Per Statute $1,000,000 E.L. Each Accident $1,000,000 E.L. Disease - Policy Limit $1,000,000 E.L. Disease - Each Employee
POLICY TYPE: Workers Compensation and Employers Liability CARRIER: Agri General Insurance Company POLICY TERM: 10/01/2016 - 10/01/2017 POLICY NUMBER: WLRC49104273 (TN)	Per Statute $1,000,000 E.L. Each Accident $1,000,000 E.L. Disease - Policy Limit $1,000,000 E.L. Disease - Each Employee
POLICY TYPE: Workers Compensation and Employers Liability CARRIER: ACE Fire Underwriters Insurance Company POLICY TERM: 10/01/2016 - 10/01/2017 POLICY NUMBER: SCFC49104285 (WI)	Per Statute $1,000,000 E.L. Each Accident $1,000,000 E.L. Disease - Policy Limit $1,000,000 E.L. Disease - Each Employee

AI-59777 **Purchasing Department** **22. B. 4.**

CC - REGULAR

Meeting Date: 05/30/2017

Submitted For: Marty Salazar, PURCHASING DEPT.

Submitted By: Sandy Suarez, PURCHASING DEPT.

Department: PURCHASING DEPT.

Information

CAPTION

Recommendation for CC to reject the sole bid received for RFB No.: 2017-012A-04-26-SGS titled: Hidalgo County-"Disposal of Used Oil-Oil Filters & Antifreeze" and to re-advertise this project, with modifications to Specifications, in hopes of obtaining more participation and better pricing.

BACKGROUND

1. Eight packets sent out. 2. Reject -Sole bid (Ygriega Environmental Services, LLC) 3. Reference PO#754521 (The Monitor - adv)

Fiscal Impact

CALENDAR YEAR: **ACCT. #:**

FUNDS AVAILABLE Y/N?: **MATCHING FUNDS Y/N?:**

BUDGETARY IMPACT:

No fiscal Impact at this time.

Attachments

Tabulation
Participation log
Memo to Reject
Legal Notice
Legal approval
Draft agreement
Modified Draft Specs

Form Review

Inbox	Reviewed By	Date
Purchasing - Internal	Marty Salazar	05/24/2017 02:36 PM
Budget & Management	Veronica Ortiz	05/24/2017 02:41 PM

Final Approval	Monica Salinas	05/26/2017 02:58 PM
Form Started By: Sandy Suarez		Started On: 05/10/2017 09:07 AM
Final Approval Date: 05/26/2017		

Hidalgo County
"Disposal of Used Oil, Oil Filters and Anti-Freeze"
RFB No. 2017-012A-04-26-SGS
TABULATION SHEET

INTERNAL USE ONLY - NIGP CODE 926-77

Vendor/ location (Sole Bidder)			**Waste Oil Removed Price Paid/ (Gal)**		
			Bidder Response		
1	Ygriega Environmental Services, LLC	1	Waste Removal	Gal	$ 120.00
		2	Anti-Freeze Removal	Gal	$ 210.00
		3	Used Filters Removal	Drum	$ 725.00
		4	Absorbent Removal (Including drip pads, rags, oil contaminated soil etc.)	Drum	$ 2,220.00

HIDALGO COUNTY PURCHASING DEPARTMENT
PARTICIPATING BIDDERS LOG
SPECIFICATIONS/BID PACKETS
IBF-RFP-RFQ-RFI

BID OPENING DATE: April 26, 2017 **BID OPENING TIME: 9:30 A.M.**
DEPARTMENT/BIDDESCRIPTION: HIDALGO COUNTY (all funding sources) "DISPOSAL OF USED OIL, OIL FILTERS & ANTIFREEZE" **BID NO.: 2017-012A-04-26-SGS**

	NAME OF VENDOR: COMPANY/FIRM	BID REQUEST *VIA	SIGNATURE (IF APPLICABLE) OR INITIALS OF STAFF ADDRESSING MAIL OUT	DATE	ADDRESS
1	Nilco Enterprises, Inc. (Dial Lubricants) Lizet Cabrates---Eric W. Nilson Anita Escalera	BLM	Sandy Suarez	**04/10/17**	PO Box 540607 Dallas, Texas 75354 972-501-0266 - 972-501-0265 anita@diallubricants.com
2	Heritage -Crystal Clean Carla Sipe	BLM	Sandy Suarez	**04/11/17**	Heritage-Crystal Clean, LLC 2175 Point Blvd., Suite 375 Elgin, IL 60123 D: 847-930-3082 F: 847-836-5677 Carla.sipe@crystal-clean.com
3	Thermo Fluids Inc. Jon Beard	BLM	Sandy Suarez	**04/10/17**	1435 Sherman St. San Antonio, Texas 78202 C 210-633-6696 O 210-229-1376 800-350-7565 jbeard@thermofluids.com
4	Thermo Fluids Inc. Jenna Brickner	~~BLM~~	~~Sandy Suarez~~	~~**04/10/17**~~	~~8925 E. Pima Center Pkway, Ste 105~~ ~~Scottsdale, AZ 85258~~ ~~480-302-6221 ext 1068~~ ~~jbrickner@thermofluids.com~~
5	Ygriega Environmental Services LLC, Arnold Maldonado	BLM	Sandy Suarez	**04/10/17 / 4/19/17**	410 North 87th Street Edinburg, TX 78542 956-381-6464 / 6969- 956-381-6446 yenvironmentalserv@yahoo.com
6	Safety-Kleen Systems Inc. Richard Gaona	BLM	Sandy Suarez	**04/10/17**	1217 East Tamarack McAllen, TX 78501 C- 956.566.2677 O- 956.682.1951 F- 956.630.6728 richard.gaona@safety-kleen.com
7	Safety-Kleen Systems Inc. Robert Burge	~~BLM~~	~~Sandy Suarez~~	~~**04/10/17**~~	C- 972.265.2656 Robert.burge@safety-kleen.com
8	Veolia North America Margie Ratcliff	Email	Sandy Suarez	**04/10/17**	1800 S Hwy 146 Baytown, TX. 77521 O- 281-425-7167 C -409-289-2075 Margie.ratcliff@veolia.com

9	Prime Vendor, Inc. Ashley Reed	Email	Sandy Suarez	**04/10/17**	4622 Cedar Ave. Suite 124 Wilmington, NC 28403 Phone: 800-746-9554 Fax: 800-746-8307 work41@prime-vendor.com
10	**Chemsol Services, Inc.** John Betancourt	Email	Sandy Suarez	**04/10/17**	Office – 956.440.7408 Cell – 956.535.1476 sales@chemsol.com
11	Prime Vendor Inc. Bretta Rundhammer	EMR	Sandy Suarez	**04/10/17**	4622 Cedar Avenue Bldg 5 Suite 124 Wilmington NC 28403 P- 800-746-9554 F: 800-746-8307 bids20@prime-vendor.com
12	Onvia Jacqueline Sessa Agency Relationship	EMR	Sandy Suarez	**04/10/17**	509 Olive Way Seattle, WA 98101 P: (206) 373-9150 jsessa@onvia.com
13	Euclid Infotech Rakhi Patil No. 36738410	EMA	Sandy Suarez	**04/10/17**	201, Eden Rose Shopping Centre Beverly Park, Kanakia Rd. Opp. Cinemax Mutiplex, Mira Rd. East, Thane 401107 , India P- 91.22.28555551 Tenderingauthority400@gmail.com
14	Arguindegui Oil Company Attn. Lindsay Clark	BML	Sandy Suarez	**04/10/17**	4506 Hwy 359 Laredo, Texas 78043 Tel: 956-722-5251 Lindsay.clark@argpetro.com
15	Prime-Vendor Laurie Melnick	EMR	Sandy Suarez	**04/11/15**	4622 Cedar Ave. Suite 124 Wilmington, NC 28403 Phone: 800-746-9554 Fax: 800-746-8307 Bids1@prime-vendor.com
16	Trans-Environmental Services, LLC Aaronn Hulett	EMR	Sandy Suarez	**04/11/15**	972) 243-1210 Office (972) 800-1305 Cell (972) 243-1435 Fax ahulett@trans-environmental.com

***VIA: EMAIL IN PERSON (IP) TELEPHONE REQUEST (TR) BIDDER LIST MAIL OUT (BLM)**

Hidalgo County Purchasing Office
2812 S. Business Highway 281
New Administration Building
Edinburg, Texas 78539
(956) 318-2626/ Fax: (956) 318-2629

MEMORANDUM
Recommendation

TO **Martin Ramirez** Via email: martin.ramirez@co.hidalgo.tx.us
Hidalgo County Environmental Compliance Office

FROM: Sandy Suarez, Buyer II
Hidalgo County Purchasing Dept.

DATE: April 27, 2017

RE: **BID AWARD RECOMMENDATION AND/OR REJECTION REQUEST**
Bid No. 2017-012a-04-26-SGS-Hidalgo County -"Disposal of Used Oil, Oil Filters & Anti-Freeze"

We have received a sole bid (1) response to the above mentioned project. Enclosed you will find a copy of the tabulation sheet along with copy of the bid response for your review and Recommendation.

Please acknowledge by signing below, and **indicating your reason** to Recommend and/or Reject sole response and return to the Purchasing Dept. **via facsimile to (956) 292-7612 or email: sandy.suarez@co.hidalgo.tx.us by no later than Thursday, April 4, 2017 @ 3:00 P.M. in order to place this item on the agenda for Commissioners Court Meeting.**

Indicate the name of the Vendor(s) in the box below and the Account number to be utilized. Should you have any questions or require further information please do not hesitate to call me at 318-2626- ext. 4860. Thank you for your attention and cooperation to this matter.

COMMENTS/CONCERNS:
My recommendation is to reject the bid due to cost.
Budget Acct No.: _____

AUTHORIZED SIGNATURE	PRINTED NAME	DEPARTMENT	DATE
	Martin Ramirez	HCECO	05/04/17

Enclosures

REQUEST FOR BIDS

HIDALGO COUNTY
"PICK UP OF USED OIL, OIL FILTERS AND ANTIFREEZE & OTHER MISC. PRODUCTS"

BID OPENING DATE

_____

DRAFT

Contact Person:

Martha L. Salazar, CPPB, Purchasing Agent
Hidalgo County Purchasing Department
Physical Address: 2802 S. Business Hwy. 281 - Administration Building
Mailing/Postal Address: 2812 S. Business Hwy. 281
Edinburg, Texas 78539
956 318-2626

Form HCPD-03

1. Sealed bids will be received for **"HIDALGO COUNTY (all funding sources, programs & entities) - "PICK UP OF USED OIL, OIL FILTERS AND ANTIFREEZE & OTHER MISC. PRODUCTS"** in accordance with the specifications attached as **Exhibit "A"** hereto. Bids should address all specifications set forth. Bidders may suggest substitutions of features which they feel would be in the best interest of Hidalgo County ("County"). Strong rationale must be presented for any deviation from the specifications. Hidalgo County reserves the right to reject the deviation and its effect on the overall bid.

2. **One (1) original and Three (3) copies** of all bids are required with the bidders name and return address clearly typed and or/printed on upper left hand corner and the proper notation clearly typed/printed on the lower left hand corner of the envelope and/or package: **BID NO.: 2017-165-00-00-SGS "HIDALGO COUNTY (all funding sources, programs & entities) – PICK UP OF USED OIL, OIL FILTERS AND ANTIFREEZE & OTHER MISC. PRODUCTS"** and at County's Purchasing Department with a physical address: 2802 S. Business 281 and a mailing address: 2812 S. Business Hwy 281, Administration Building, Edinburg, Texas, **on or before 9:30 A.M, WEDNESDAY, MONTH 00, 2017. NO FACSIMILES, EMAILS OR LATE ARRIVALS WILL BE ACCEPTED. ANY RFB RECEIVED AFTER THAT TIME WILL NOT BE OPENED AND WILL BE RETURNED. OVERNIGHT MAIL MUST ALSO BE PROPERLY LABELED ON THE OUTSIDE OF EXPRESS ENVELOPE OR PACKAGE WITH REFERENCE TO "HIDALGO COUNTY (all funding sources, programs & entities) -RFB NO.: 2017-165- 00-00-SGS -"PICK UP OF USED 0OIL, OIL FILTERS AND ANTIFREEZE & OTHER MISC. PRODUCTS"** Hidalgo County reserves the right to refuse and reject any/all bids and to waive any/all formalities or technicalities, or to accept the bids considered the best and most advantageous to Hidalgo County.

   Additionally, all forms listed below must be properly executed and included with your bid:

   1. Legal Notice (See page 8);
   2. Bid Page – Procurement Form – Areas of Specialization (See **Exhibit "B"**);
   3. Insurance pages with Acknowledgment Forms (See **Exhibit "C"**);
   4. Form CIQ-Conflict of Interest Questionnaire (See **Exhibit "D"**);
   5. Vendor Bidder Application & W-9 forms (See **Exhibit "E"**);
   6. Certification Regarding Debarment (See **Exhibit "F"**); and
   7. SAMS.gov Registration Acknowledgement (See Number 18 below).

3. Hidalgo County reserves the right to: A. separate and accept, or eliminate any item(s) listed under this bid that it deems necessary to accommodate budgetary and/or operational requirements; B. reject any or all bids submitted and further reserves the right to design the evaluation criteria to be used in selecting the lowest and best bid for approval; C. award the bid to one bidder or to multiple bidders if the County determines it is in its best interest to do so; D. award the contract to the responsible bidder who submits the lowest and best bid. "Lowest and best" means a bid or offer providing the best value considering associated direct and indirect costs, including transport, maintenance, reliability, life cycle, warranties, and customer service after a sale.

4. The Bidder shall not substitute items named in the bid without the express written consent of Hidalgo County. Failure of the delivered item to perform as specified or failure to meet the stated delivery schedule shall release Hidalgo County from all obligations to the contracting party with regard to the item(s) in question. In such event, County may elect to award the contract to the next-lowest

DRAFT

responsible bidder, or to reject all bids and re-advertise.

5. For work to be performed at a County owned or operated location, each bidder shall, in its sole discretion, visit the job site before preparing the bid and thoroughly familiarize himself/herself with existing conditions. Bidder should take field dimensions and note all circumstances which affect the dollar amount of the bid.

6. Descriptive specifications are referenced in this document to indicate the general kind and quality of equipment desired by Hidalgo County. Due to various styles and models of equipment, bidders are required to include illustrations, specifications, explanation of warranties, and service data with their bid including catalogue numbers and any necessary references.

7. No bid may be withdrawn within thirty (30) days from the scheduled time to open bids.

8. Proposed prices are to remain firm for a minimum of ninety (90) days after bid opening.

9. Any interpretations, amendments, corrections or changes to this bid document must be in a written addendum and signed by the County Judge or his designee. Addenda will be mailed to all who are known to have received a copy of the Request for Bids. Bidders shall acknowledge receipt of all addenda as a part of their bid.

10. County reserves the right to accept or reject any or all Bids.

11. Costs are to be net F.O.B., County Prepaid.

12. County is exempt from Federal Excise Tax, State Tax and Local Tax. Do Not include tax in cost figure. If it is determined that tax was included in the cost figures it will not be included in the tabulation of any awards. Tax exemption certificates will be furnished upon request.

13. Funds for this procurement have been provided through the County budget for this fiscal year only. County, on an annual basis, has the right to reconsider a contract during the budget process for ensuing years if financial resources of County are insufficient to meet the liabilities of said contract. The award of a bid or contract hereunder will not be construed to create a debt of the County which is payable out of funds beyond the current fiscal year.

14. Upon award and prior to execution of a contract, Sole Proprietorships are required to submit a copy of their social security cards to the Hidalgo County Auditor's Office in order to establish an account with the County. All awarded vendors must submit a completed W-9 and a copy of their Federal ID Number Certificate.

15. DELIVERY INSTRUCTIONS:

- No deliveries accepted after 3:00 P.M., Monday-Friday.

- At least seventy two (72) hours prior notice of delivery must be given to Martha L. Salazar, Purchasing Agent before delivery will be accepted.

- If you need additional information call the office listed below:

Hidalgo County Purchasing Department
Martha L. Salazar, Purchasing Agent
(956) 318-2626

DRAFT

16. BILLING AND PAYMENT INSTRUCTIONS:

- Invoices must include:
  a) Name and address of successful bidder
  b) Name and address of receiving department or official
  c) Purchase Order Number (if any)
  d) Notation - "HIDALGO COUNTY -RFB NO.: 2017-165-00-00-SGS "PICK UP **OF USED OIL, OIL FILTERS AND ANTIFREEZE & OTHER MISC. PRODUCTS**" Descriptive information as to the items or services delivered, including product code, item number, quantity, etc.
  e) Contract number must be indicated on all invoices

- Discount payments will be considered when offered.
- Contact person for Billing and Payment questions:

Hidalgo County Auditor's Office
2808 S. Business Hwy 281
Edinburg, TX 78539
(956) 318-2511

17. SCHEDULE OF EVENTS

Bid Opening, 9:30 A.M.	MONTH 00, 2017
Award of Contract	_____, 2017
Commence Work or Deliver Products	_____, 2017

18. BID OR PERFORMANCE BOND AND DEBARMENT CERTIFICATION; PAYMENT UNDER CONTRACT:

- If the contract proposed is for the construction of public works or is for a contract for goods & services exceeding $100,000, all bidders shall furnish a good and sufficient bid bond in the amount of five percent of the total contract price. A bid bond must be executed with a surety company authorized to do business in Texas. All bidders are also required to furnish a certification or acknowledgment stating that the contractor or vendor is free from suspension or debarment pursuant to federal regulation 45CFR Part 76. **Register at SAMs System for Award Management @ www.sam.gov.**

- Together with the signing of a contract or issuance of a purchase order following the acceptance of a bid, and prior to commencement of the actual work, the bidder shall furnish a performance bond to the County for the full amount of the contract, if that contract exceeds $50,000.

- If the contract is for $50,000 or less, no money will be paid to the contractor until completion and acceptance of the work or the fulfillment of the purchase obligation to the County, and, if applicable, the receipt by County of satisfactory evidence that all subcontractors and material men have been paid.

- If a contract is for the construction, alteration or repair of public buildings or public works, the contractor *shall* provide a payment bond for a contract in excess of Twenty Five Thousand Dollars ($25,000.00), as required by Tex. Govt. Code Ch. 2253.

DRAFT

For requirements contracts, bond requirements are determined by applying the proposed unit price to the estimated quantities included in the specifications.

19. TITLE VI NOTICE/ NONDISCRIMATION

a. "The County of Hidalgo, in accordance with the provisions of Title VI of the Civil Rights Act of 1964 (78 Stat.252, 42 U.S.C. §§2000d to 2000d-4) and the Regulations, hereby notifies all bidders that it will affirmatively ensure that any contract entered into pursuant to this advertisement, disadvantaged business enterprises will be afforded full and fair opportunity to submit bids in response to this invitation and will not be discriminated against on the grounds of race, color, or national origin in consideration for an award."

b. The appropriate clauses of Appendices "A" through "E" as delineated in the USDOT Standard Title VI/Nondiscrimination Assurances - Specific Assurances are hereby incorporated by reference as applicable. Title VI Appendices "A" through "E" are attached as **Exhibit "G.**

c. Bidder will attach all applicable notices to which it is obligated to provide or submit as part of the bid, including Form FHWA 1273 to be submitted by all contractors and subcontractors in relation to construction contracts.

20. ETHICAL STANDARDS:

. It shall be a breach of ethics to offer, give or agree to give any elected official, department head or employee, or former elected official, department head or employee, of the County, or for any elected official, department head or employee or former elected official, department head or employee of the County, to solicit, demand, accept or agree to accept from another person, entity or organization, a gratuity or an offer of employment in connection with any decision, approval, disapproval, recommendation, preparation or any part of a program requirement or purchase request, influencing the content of any specification or procurement standard, rendering of advice, investigation, auditing, or in any other advisory capacity in any proceeding or application, request for ruling, determination, claim or controversy, or other particular matter pertaining to any program requirement or a contract or subcontract, or to any solicitation or proposal therefore pending before any department or agency of the County.

. It shall be a breach of ethics for any payment, gratuity or offer of employment to be made by or on behalf of a subcontractor under a contract to the prime contractor or higher tier subcontractor for any contract for the County, or any person associated therewith, as an inducement for the award of a subcontract or order.

. No public official shall have an interest in a contract awarded hereunder except in accordance with Tex. Loc. Govt. Code Chapter 171.

NOTICE:
ALL COMMUNICATIONS BY A VENDOR TO THE COUNTY, ITS OFFICIALS, AND DEPARTMENT HEADS REGARDING THIS PROCUREMENT SHALL BE DONE THROUGH THE HIDALGO COUNTY PURCHASING DEPARTMENT.

21. DISCLOSURE OF CONFLICT OF INTEREST

. Effective January 1, 2016, Chapter 176 of the Texas Local Government Code requires that any vendor, person, consultant or contractor considering doing business with Hidalgo County ("the County") to disclose in the Conflict of Interest Questionnaire (the "CIQ") attached as Exhibit E, the vendor, person, consultant or contractor's affiliation or business relationship that might cause a conflict of interest with the County. By law, the CIQ must be filed with the

Hidalgo County Clerk's Office no later than the seventh business day after the date the person becomes aware of facts that require that statement to be filed. The disclosure requirement applies to a person or business who contracts or seeks to contract with Hidalgo County for the sale or purchase of property, goods or service. Any purchase order or contract resulting from this process shall be considered null and void if the successful bidder fails to comply with Texas Local Government Code Chapter 176. Vendors, consultants, contractors and others who desire to conduct business with Hidalgo County are encouraged to refer to Texas Local Government Code Chapter 176 for the details of this law. An offense under Texas Local Government Code Chapter 176 is a Class C Misdemeanor.

Completed Form CIQ must be submitted to the Hidalgo County Clerk's Office located at 100 N. Closner, Edinburg, Texas 78539 - Hidalgo County Courthouse.

COMPLETION AND SUBMISSION OF FORM CIQ IS THE SOLE RESPONSIBILITY OF THE PROSPECTIVE RESPONDENT. QUESTIONS REGARDING COMPLIANCE SHOULD BE DIRECTED TO YOUR LEGAL COUNSEL.

22. CERTIFICATE OF INTERESTED PARTIES (FORM HB1295)

As of January 1, 2016, to comply with Texas Government Code Section §2252.908, and the rules issued by the Texas Ethics Commission found in Title 1, Section 46.1, 46.3 and 46.5 of the Texas Administrative Code, we have updated and revised our RFB packet. In accordance with these requirements, business must submit a completed Certificate of Interested Parties Form 1295 to the County before the County may enter into a contract with the business entity. In box 3 of Form 1295, you will provide the **RFB Project No. (2017-165),** as shown on the packet. Once completed and filed with the Texas Ethics Commission, Form 1295 must be printed and signed in the presence of a notary and submitted to our office either by facsimile transmission to (956) 292-7612 or via email to: sandy.suarez@co.hidalgo.tx.us. Hidalgo County cannot enter into a contract until Form 1295 is submitted. Therefore, failure to timely submit Form 1295 signed and notarized may result in delay of award. Full instructions for completion and submittal of Form 1295 may be found on the Texas Ethics Commission website:

https://www.ethics.state.tx.us/tec/1295-Info.htm

THE AWARDED VENDOR WILL HAVE THIRTY (30) DAYS FROM THE DATE THE HIDALGO COUNTY COMMISSIONER'S COURT APPROVES THIS AGREEMENT TO SUBMIT THE SIGNED NOTARIZED FORM 1295. *HIDALGO COUNTY CANNOT ENTER INTO A CONTRACT UNTIL FORM 1295 IS SUBMITTED.*

23. If, during the life of any contract or bid awarded, the successful bidder's net prices generally available to other customers for items awarded herein are reduced below the contracted price, it is understood and agreed that the benefits of such reduction shall be extended to the County.

24. Bids, and all goods and services provided hereunder, shall comply with all federal, state and local laws concerning this type(s) of goods and/or services.

25. Minimum Standards for Responsible Prospective Bidders: A prospective bidder must affirmatively demonstrate bidder's responsibility. A prospective bidder, by submitting a bid, represents to County that it meets the following requirements:

- Possess or is able to obtain adequate financial resources as required to perform under the bid;
- Be able to comply with the required or proposed delivery schedule;
- Have a satisfactory record of performance;
- Have a satisfactory record of integrity and ethics;
- Be otherwise qualified and eligible to receive an award.

26. Successful bidder will pay or cause to be paid, without cost or expenses to County, all FICA,

DRAFT

FUTA/SUTA and Federal Income Withholding Taxes of all employees, and all wages and benefits as required by Federal or State law. Successful bidder's officers, agents and/or employees will not be entitled to any benefits of an employee or elected official of County, including, but not limited to, benefits associated with County's civil service system.

27. Any contract award to a successful bidder will be in effect until (a) the contract expires, (b) delivery and acceptance of products, and/or performance of services ordered, or (c) terminated by County with thirty day's written notice prior to cancellation.

28. County reserves the right to enforce performance of any contract awarded hereunder in any manner prescribed by law or deemed to be in the best interest of the County in the event of breach or default by successful bidder; County reserves the right to terminate any contract immediately in the event a successful bidder fails to:

    A. Meet schedules;
    B. Pay any required fees or taxes; or
    C. Otherwise perform in accordance with the specifications.

29. Successful bidder shall defend, indemnify and save harmless County and all its elected officials, officers, agents and employees from all suits, actions, or other claims of any character, name and description brought for or on account of any injuries or damages received or sustained by any person, persons, or property on account of any negligent act or fault of the successful bidder, or of any agent, employee, subcontractor or supplier of successful bidder in the execution of, or performance under, any contract which may result from bid award or which arises from any event or casualty happening on or within County premises themselves or happening upon or in any halls, elevators, entrances, stairways or approaches of or to such County facilities. Successful bidder shall pay any judgment with costs which may be obtained against County growing out of such injury or damages, and shall, upon request, provide a defense to County by counsel reasonably acceptable to County. Successful bidder's indemnity hereunder shall include, but is not limited to, claims relating to patent, copyright or trademark infringement, and the like, arising out of the goods and services provided by successful bidder.

30. Successful bidder shall warrant that all items/services shall conform with the specifications and/or all warranties provided under the Uniform Commercial Code and be free from all defects in material, workmanship and the like. Items supplied under a contract pursuant to this Request for Bids shall be subject to County's approval. Items found to be defective or not meeting specifications shall be replaced by successful bidder within two business days at no expense to County. Items not picked up within one (1) week after notification shall be deemed a donation to County and may be used or disposed of at County's discretion and without waiver of any other rights of County as to the item's nonconformity.

31. This document and any disputes arising hereunder shall be governed and construed according to the laws of the State of Texas, and will be performable exclusively in Hidalgo County, Texas.

32. The successful bidder shall not assign, sell, transfer or convey its rights under any awarded contract, in whole or in part, without the prior written consent of County.

DRAFT

LEGAL NOTICE

Bid
for
HIDALGO COUNTY
(all funding sources, programs & entities)
"PICK UP OF USED OIL, OIL FILTERS AND ANTIFREEZE"
BID NO.: 2017-165-00-00-SGS

To: Martha L. Salazar, CPPB, Purchasing Agent
Physical Address: 2802 S. Business Hwy. 281 - Administration Building
Mailing/Postal Address: 2812 S. Business Hwy. 281
Edinburg, Texas 78539

In accordance with the Specifications, and subject to all laws and regulations of the United States and state and local laws, the undersigned bidder proposes and commits to furnish all labor, equipment, material, software and services as set forth in the documents hereinbefore mentioned. The undersigned bidder further agrees, upon acceptance of its bid, to execute a contract and/or Purchase Order issued by Hidalgo County for performing and completing the work described in the Specifications within the time stated and for the prices proposed in the documents attached hereto and made a part hereof.

Bidder acknowledges receipt of all of the pages of the documents referenced in the Invitation to Bid Checklist presented in connection with this procurement. Bidder understands that Hidalgo County reserves the right to reject any or all bids and further reserves the right to design the evaluation criteria to be used in selecting the lowest and best bid.

Bidder agrees that this bid shall be good and may not be withdrawn for a period of ninety (90) calendar days after the scheduled closing time for receiving bids, as contained in the Specifications.

Respectfully submitted,

Bidder: _____

Address: _____

By: _____

Printed Name: _____

Title: _____

DRAFT

Zimbra **sandy.suarez@co.hidalgo.tx.us**

Fwd: RE: RFB NO.: 2017-012A--SGS "PICK UP USED OIL- FILTERS AND ANTI-FREEZE" Request for Draft & Legal approval

---

From : Darlene H. Betancourt <darlene.betancourt@co.hidalgo.tx.us> Mon, Mar 13, 2017 01:12 PM

1 attachment

Subject : Fwd: RE: RFB NO.: 2017-012A--SGS "PICK UP USED OIL- FILTERS AND ANTI-FREEZE" Request for Draft & Legal approval

To : Sandra Suarez <sandy.suarez@co.hidalgo.tx.us>

Ms. Sandy,

See below comment from Mr. Crain, draft contract is ready to go. Thank s

Darlene H. Betancourt, CPPB
Hidalgo County Purchasing Department
2812 S. Business Hwy. 281
Edinburg, TX. 78541
956-292-7000 x-4852

----- Forwarded Message -----
From: Steve Crain <scrain@atlashall.com>
To: 'Darlene H. Betancourt' <darlene.betancourt@co.hidalgo.tx.us>
Sent: Mon, 13 Mar 2017 11:25:21 -0500 (CDT)
Subject: RE: RFB NO.: 2017-012A--SGS "PICK UP USED OIL- FILTERS AND ANTI-FREEZE" Request for Draft & Legal approval

Looks good.

From: Darlene H. Betancourt [mailto:darlene.betancourt@co.hidalgo.tx.us]
Sent: Monday, March 13, 2017 10:10 AM
To: Steve Crain <scrain@atlashall.com>
Cc: Sandra Suarez <sandy.suarez@co.hidalgo.tx.us>
Subject: Fwd: RFB NO.: 2017-012A--SGS "PICK UP USED OIL- FILTERS AND ANTI-FREEZE" Request for Draft & Legal approval

THE STATE OF TEXAS §
§
COUNTY OF HIDALGO §

SERVICE CONTRACT
C-17-165-00-00

THIS CONTRACT is made and entered into this_____Day of_____ **, 2017** by and between the **COUNTY OF HIDALGO, TEXAS** ("County"), and___ _____**"**Company").

WHEREAS, Company responded to advertised notices for bids for **"PICK UP OF USED OIL, OIL FILTERS AND ANTIFREEZE & OTHER MISC. PRODUCTS",** as more particularly described in Exhibit "A"(the "Services"); and

WHEREAS, Company submitted a bid to provide services in accordance with the specifications as bid, a copy of such specifications and bid being attached hereto as Exhibits "A" and "B" ("Vendor's Bid") respectively, and incorporated herein for all purposes (the "RFB Packet"); and

WHEREAS, in recognition of and in consideration of Company's agreement to perform the Services in accordance with Specifications, the Commissioners Court of County awarded the bid to Company.

NOW, THEREFORE, in mutual consideration of the foregoing and the further consideration of the following, the parties hereto agree as follows:

1. County and Company hereby agree that this Contract is entered into in

DRAFT

order to provide the Services to locations at **Hidalgo County**. This Contract does not extend to any third parties any duties or benefits conferred in any manner hereunder or otherwise.

2. Company hereby promises and agrees to render and provide, during the term of this Contract, and shall be obligated to render and provide the Services in accordance with the Specifications described in Exhibits A and B within Hidalgo County following a request for Services by the Commissioners Court or their designated agent. Company agrees in performing the Services that it will use proper professional standards, comply with any and all appropriate laws and regulations in providing the Services, and devote such time as is necessary to safely and efficiently provide the Services.

3. This Contract shall be for a period of **one (1) year** effective _____ _____and ending on_____, and may be extended at the sole discretion of County for one (1) additional - one (1) year period, at the same rates, terms and conditions, unless this Contract is terminated pursuant to the provisions herein, whichever occurs first. County also reserves the right to continue this bid for an additional sixty (60) day Grace Period, under the same rates terms and conditions.

4. As a condition of this Contract, Company shall hold and maintain throughout the term of this Contract all licenses and permits required, or which may be required by any authority during the term hereof to provide the Services.

DRAFT

5. All trucks or vehicles operated by the Company to perform the Services shall contain all equipment required by any authority to operate on streets and roads and all persons in the employ of Company who operate such trucks or vehicles shall have the required licenses, qualifications, skill and expertise to perform such Services and shall comply with all laws, rules and regulations prescribed by any agency or authority having jurisdiction with regard to the operation of such trucks or vehicles in providing the Services.

6. As consideration for rendering the Services provided for in this Contract, the Company agrees to pay the County the amounts as specified in Exhibit "B" as attached hereto and payable against sequentially numbered detailed manifest or invoices for each collection submitted by the Company to Hidalgo County Treasurer's Office with copy to the Hidalgo County Department User, within thirty (30) days of submitting such weight tickets. Contract number to be referenced on each manifest or invoices.

7. Company shall provide insurance in force on all its vehicles and all persons connected with providing services under this Contract naming County as an additional insured (with the coverages and in the amounts described on Exhibit "C" attached hereto and incorporated herein at this point for all purposes), and shall furnish to County certificates of such insurance coverage.

8. Company shall provide a sufficient number of trucks, vehicles, personnel and equipment available to safely and efficiently provide the Services.

9. Company shall indemnify and hold harmless County, its elected officials,

DRAFT

employees and agents from any and all claims, damages, losses, and expenses including attorney's fees for the defense of any action against County arising out of, resulting from, or connected with the provision of the Service by Company under this Contract. Said indemnity shall cover any act or failure to act by the Company, its agents or employees.

10. This Contract shall not be assignable in whole or in part by either party without prior written consent of the other party.

11. It is expressly agreed that this Contract and the performance by the parties hereunder does not create any agency relationship or master-servant relationship,that County has no supervision of the performance of the Services provided by Company, and that Company is an independent contractor under this Contract.

12. Any notice required or permitted to be given hereunder shall be in writing and shall be delivered personally or sent by certified mail, postage prepaid, as set forth below:

If to County: The County of Hidalgo
Attn: County Judge
100 E. Cano St.
Edinburg, Texas 78539

If to Company:

13. In case any one or more of the provisions contained in this Agreement shall for any reason be held to be invalid, illegal or unenforceable in any respect, such invalidity, illegality, or unenforceability shall not affect any other provision thereof and this Agreement shall be construed as if such invalid, illegal, or unenforceable provision

DRAFT

had never been contained herein.

14. Any contract award to a successful bidder will be in effect until (a) the contract expires, (b) delivery and acceptance of products, and/or performance of services ordered, or (c) terminated without cause by County with thirty day's written notice prior to cancellation.

15. This Agreement shall be binding upon and inure to the benefit of and be enforceable by the parties hereto and their respective heirs, executors, administrators, legal representatives, successors, and assigns where permitted by this Agreement.

16. This Agreement shall be governed by and construed in accordance with the laws of the State of Texas and shall be performable in Hidalgo County.

17. **Commitment of Current Revenues Only.** In the event that, during any term hereof, the Commissioners Court does not appropriate sufficient funds to meet the obligations of County under this Agreement, County may terminate this Agreement upon ninety (90) days written notice to Company. County agrees, however, to use reasonable efforts to secure funds necessary for the continued performance of this Agreement. The parties intend this provision to be a continuing right to terminate this Agreement at the expiration of each budget period of County pursuant to the provisions of Tex. Loc. Govt. Code Ann. ' 271.903 (Vernon Supp. 1996).

18. **Entire Agreement.** This Agreement contains the entire contract between the parties hereto, and each party acknowledge that neither has made (either directly or through any agent or representative) any representation or agreement in

DRAFT

connection with this Agreement not specifically set forth herein. This Agreement may be modified or amended only by agreement in writing executed by the parties hereto, and not otherwise.

19. **Immunities.** Nothing in this Agreement is intended to and County does not hereby waive, release or relinquish any right to assert any of the defenses County enjoys by virtue of the state or federal constitution, laws, rules or regulations, and any sovereign, official or qualified immunity available to County as to any claim or action of any person, entity, or individual against County.

DRAFT

WITNESS our hands in duplicate originals this day of , **2017.**

COUNTY OF HIDALGO

ATTEST:

By:_____
Ramon Garcia, County Judge

_____
Arturo Guajardo Jr., County Clerk

COMPANY

By:_____

Printed Name:_____

Title:_____

APPROVED AS TO FORM:
Office of Criminal District Attorney
Hidalgo County, Texas

By: _____
Josephine Ramirez Solis
Assistant Criminal District Attorney

APPROVED BY COMMISSIONERS COURT:_____, 2016

DRAFT

EXHIBIT "A"

REQUEST FOR BIDS (RFB)PROCURMENT PACKET

DRAFT

EXHIBIT "B"

VENDOR'S BID

DRAFT

EXHIBIT "C"
INSURANCE REQUIREMENTS

DRAFT

EXHIBIT "A"
HIDALGO COUNTY
(All funding sources, programs & entities)
"PICK UP OF USED OIL, OIL FILTERS AND ANTIFREEZE & OTHER MISC. PRODUCTS"
RFB NO.: 2017-165-00-00-SGS

SCOPE OF WORK:

Hidalgo County is seeking an annual contract from qualified Vendors for collection services, in accordance with the specifications/requirements herein including, but not limited to the following: Collection, recycling and/or disposal services of used oil, oil filters, anti-freeze, and absorbents (including drip pads, rags, oil contaminated soil and/or granular oil absorbents) at six (6) locations throughout Hidalgo County. Services will be on an "**as needed basis** "only.

Locations to be serviced						**Estimation - Only** Annual Collection Per Location		
	Place		***Address***	***Ph.***	***POC***	***Used Oil*** *(gallons)*	***Used Oil Filters*** *(55 gallon drums)*	***Antifreeze*** *(55 gallons)*
1	Precinct 1	Maintenance Shop	1902 Joe Stephens Ave. Weslaco, Texas 78596	968-8733	Richie Moreno	1,200	8	8
2	Precinct 2	County Wide Main. Shop	329 E. State St. Pharr, Texas 78577	787-1891	Enrique Escamilla	1,200	36	8
3		Field Operations Facility	4011 So. Veterans San Juan, Texas 78589	787-1891	Eduardo Pacheco			
4	Precinct 3	Road & Bridge Main. Shop	8310 W. Mile 7 Road Mission, Texas 78574	585-4509	Saul Ramirez	1,200	24	8
5	Precinct 4	Main. Shop	1102 N. Doolittle Edinburg, Texas	383-3112	Roman Rodriguez	1,500	24	8
6	Sheriff's Office	Maint. Shop	711 El Cibolo Road Edinburg, Texas	383-8114	Capt. Raul Cantu	2,550	24	8

SPECIFICATIONS/REQUIREMENTS:

The Awarded vendor shall provide all necessary labor, supervision, equipment and supplies for the removal and disposal of used oil, oil filters, antifreeze and absorbents generated by Hidalgo County facilities. County owned containers/drums will be included in this service, during the contracted term. Once a request is made by the Department, Vendor must be able to provide services within five (5) business days of notification.

Bidder will provide Hidalgo County with necessary documentation, showing compliance with state and federal laws and regulations governing the handling, transport and disposal and/or recycling of used oil, oil filters, antifreeze and absorbents. Copies of all Permits/Certifications are to be enclosed with Bid response. https://www.tceq.texas.gov

Cost

All Bid(s) will be on a per item basis (i.e. gallons and/or drums), for the full duration of the contract term specified herein. Any additional fees should be included in the Bid price (i.e. service charges, stop fees. fuel charges etc.).

Bid Page-Exhibit "B"

Each Section and/or Item on the Bid page shall be thoroughly filled out. Indicate a "No Bid" on items not wishing to bid on. Contract will be awarded to the responsible bidder who submits the lowest and best bid.

Recyclables

Awarded Bidder shall accept the recyclables collected in an "as is" condition.

Containers

If requested and needed by County facilities, the contracted Bidder shall provide containers with closeable lids for collection of used oil. Containers should be in good condition, free of large dents, and be free of rust on the outside surface. Lids and sliding doors should be maintained to open and close freely without binding

or hanging and Contractor will insure that they are maintained clean and in good working order.
The awarded Bidder will also provide appropriate size containers, such as 55-gallon drums or equivalent to in good condition with closeable lids for used oil filters, anti-freeze and absorbents. **All** containers/drums provided by the awarded Bidder will meet federal and state standards for use. Full containers/drums of used oil filters, antifreeze, and absorbents will be collected and replaced by an empty container of same capacity within five (5) business days of notification by County.

Manifests or Invoices

The awarded Bidder will provide the County sequentially numbered manifests or invoices for each collection of used oil, used oil filters, anti-freeze and absorbents at each County facility. The manifest or invoice must have the following information:

- Vendor's Name, address, and phone number
- Vendor's TCEQ and EPA Identification Numbers
- Driver's name, Signature, and Valid drivers' license number for receipt of materials
- Name of Hidalgo County facility and address
- Name and signature of Hidalgo County facility personnel releasing materials
- Types of materials Collected (used oil, used oil filters, antifreeze and/or absorbents)
- Quantity Collected in gallons or containers (must indicate size of container)
- Collection Date and Time
- Disposal/Recycling facility name, address, telephone number, TCEQ/EPA identification number and,
- Name and signature of person receiving materials
- Copy of the manifest and/or invoice **must be left** with Department(s) upon each pick up of material.

Bidder's Responsibility while Collecting, Loading, or Unloading at County Facilities

The awarded Bidder will be responsible for implementing procedures to protect County property from spills of oil, fuel and/or any other hazardous materials while collecting used oil, used oil filters, antifreeze, and absorbents. They will be responsible for cleanup and appropriate corrective actions to remediate any impacts to county property due to their operations.

TERMS & CONDITIONS:

1. The term of contract is for one (1) initial year with the option to extend for an additional One (1) – One year term at the same terms & conditions at the discretion of the County.

2. Hidalgo County reserves the right to continue this bid for an additional sixty (60) day grace period at the end of the contract term for unforeseen delay in award of new bid for next contract term.

3. Hidalgo County reserves the right to hold bids for a period of ninety (90) days without taking any action.

4. After bid is awarded and low bidder defaults in meeting the terms and conditions of this bid and/or comply with the contractual agreement, Hidalgo County reserves the right to seek services from the next lowest qualified bidder(s) and/or meeting all specifications.

5. Hidalgo County may seek purchases from State awarded vendors or any other cooperative purchasing programs, whenever it is in the best interest to do so.

6. Vendors must, upon request, furnish satisfactory evidence of their ability to furnish products or services in accordance with the terms and conditions of these specifications. Hidalgo County will make the final determination as to the vendor's ability.

7. All products and/or services furnished under this RFB shall be warranted by the vendor to be free from defects and fit for the intended use.

8. The awarded vendor shall observe and obey all laws, ordinances, rules and regulations of the Federal, State and local government which may be applicable to the supply of these products and/or services.

9. After contract is awarded and successful awarded bidder defaults in meeting the general instructions to bidders(s) and/or in complying with the contract agreement, Hidalgo County reserves the right to procure the articles and services from other sources and hold the defaulting contractor responsible for any excess cost occasioned thereby. In such event, Hidalgo County shall charge the successful contractor the difference for any additional cost to the County.

10. Continuing non-performance of the bidder in terms of specifications shall be basis for the termination of the contract by the County. The County shall not pay for work, equipment or supplies which are unsatisfactory. Vendor will be given a reasonable opportunity before termination to correct the deficiencies.

11. Hidalgo County reserves the right to award to ONE or to MULTIPE, if the County determines it is in the best interest to do so.

12. Hidalgo County reserves the right to reject any/all bids, to waive any/all formalities or technicalities or to accept the bid considered the best and most advantage to the County.

13. Any contract awarded to a successful bidder will be in effect until:
    a) The contract expires
    b) Delivery acceptance of product(s) and/or performance of services ordered or
    c) Terminated by County with thirty (30) days written notice prior to cancellation.

14. Hidalgo County reserves the right to add or delete sites during the term of the contract under the same rates, terms and conditions.

15. The bidder(s) awarded the contract **cannot** engage the services of a **subcontractor without prior written consent of Hidalgo County** to perform services hereunder. The successful bidder(s) must present evidence that the proposed subcontractor possess all the necessary licenses and permits to perform the services and that subcontractor has obtained the required insurance.

16. All costs and expenses associated with the preparation and submission of (bids, proposals, quotes/sealed quotes and Statement of Qualifications) shall be the responsibility of the bidder and no reimbursement for such charges or expenses shall not be passed onto Hidalgo County.

DRAFT

MARKET VOLATILITY AND UNIT PRICE ADJUSTMENTS:

Hidalgo County recognizes that during periods of national crisis and unstable economic conditions, unforeseen price increases Might affect costs for goods and services contracted on an annual basis. The following procedure may be employed to mediate price volatility:

1) **Requesting Price Adjustment**: Upon written request of the Vendor to the County Purchasing Agent, the County may review evidence of prevailing industry-wide market conditions that warrant an adjustment in bid prices contained in the contract.

   - A Vendor must tie any price change clause to an industry-wide or otherwise nationally recognized index, or some other form of verifiable document. Such written request must be accompanied by a certified copy of the supplier's advisory or notification to the vendor of the price changes.
   - The Vendor must put the Purchasing Agent on the mailing lists for such publications so that the Purchasing Agent can monitor said changes. Such membership shall be at no cost to the County.
   - The County Purchasing Agent retains the right to determine whether or not such proposed price changes are in the best interest of the County.
   - No price escalation will be authorized in excess of the amount of the increase referred to in the supplier's notice.
   - The County may only grant a price increase if the evidence presented is deemed reliable. Should the County allow a price increase, the approved price change shall be honored for all orders received by the vendor or contractor after the effective date of such price change. Approved price changes are not applicable to orders already issued and in process at time of price change.

2) **Price Reduction**: Vendor shall notify the County at the time when the Vendor's costs for items and/or supplies reduce due to stabilization in the market at which time prices for items on this contract shall be reduced accordingly. Failure by the Vendor to notify the County of a decrease in costs for items and/or supplies for which the Vendor was granted a price adjustment, may result in immediate termination of this contract and the County shall not be obligated to pay the Vendor the difference between the contract price and the price adjustment.

3) **Timeframe for Adjusted Price Increases:** Price increases are only valid for the quarter in which they are requested and approved. Prices shall return to the original contract price at the beginning of the following quarter unless a Vendor notifies the County in writing within ten (10) days of expiration of the quarter in which the price increase is in effect, that it desires to have the price increase continue or that the Vendor is requesting a different price increase for the following quarter. Such request must be supplemented with sufficient justification to demonstrate that the price increase remains necessary. The County Purchasing Department shall have sole discretion whether to grant the price increase extension. The County too, shall have discretion to unilaterally reduce, eliminate or extend a price adjustment to the Vendor at any time upon written notice from the County to the Vendor demonstrating justification for such reduction, elimination or extension of the price adjustment.

DRAFT

4) **Allowable Review Periods**: Price adjustment reviews may only be requested by the Vendor on a quarterly basis. However, the County may at its own discretion, conduct temporary price adjustment reviews at any time. The County Purchasing Agent and/or the County Auditor reserve the right to audit and/or examine any pertinent books, documents, papers, records or invoices relating directly to the contract transaction in question after reasonable notice and during normal business hours.

5) **Dollar Limit to Price Changes**: The total increase in contract price shall not exceed twenty-five percent (25%) of the original contract price during the contract term.

ADDITIONAL INFORMATION:

Hidalgo County is requesting that any and all questions, inquiries, and clarifications regarding quotes, bids, proposals, or statements of qualifications be addressed to: Martha L. Salazar, CPPB, Purchasing Agent, 2812 S. Business Hwy. 281, Edinburg, Texas 78539. **TELEPHONE INQUIRIES WILL NOT BE ACCEPTED.**

ALL WRITTEN INQUIRIES WILL BE ACCEPTED VIA FACSIMILE TO (956) 292-7612 OR VIA E-MAIL TO: sandy.suarez@co.hidalgo.tx.us by NO LATER THAN MONDAY, MAY 00, 2017 BY 5:00 P.M. Responses will be sent to all applicants via facsimile or e-mail by no later than WEDNESDAY, MAY 00, 2017 BY 5:00 P.M.

DRAFT

AI-59985 **Purchasing Department** **22. C. 1.**

CC - REGULAR

Meeting Date: 05/30/2017

Submitted For: David Fuentes, COMM. PCT. #1

Submitted By: Noemi De Los Rios, COMM. PCT. #1

Department: COMM. PCT. #1

Information

CAPTION

PCT. 1

1. Requesting acceptance and approval of Certificate of Construction Completion as submitted by Texas Cordia Construction for Paving & Drainage Improvements for Mile 11 North (FM 1015 - Mile 1 West).
2. Requesting acceptance and approval of Application for Payment No. 7 (Retainage Release) in the amount of $31,666.57 as submitted by Texas Cordia Construction contracted vendor for the provision of Paving & Drainage Improvements for Mile 11 North (FM 1015-Mile 1 West) under Contract C-16-279-09-06.

BACKGROUND

PCT.1 Paving & Drainage Improvements Project - Mile 11 North (FM 1015 - Mile 1 West).

Fiscal Impact

CALENDAR YEAR: 2017 **ACCT. #:** 7-1350-431-00-121-214-0-721

FUNDS AVAILABLE Y/N?: Y **MATCHING FUNDS Y/N?:**

BUDGETARY IMPACT:

REQ# 308296 PO# 751918
C-16-279-09-06

Attachments

Cert. of Const. Completion Texas Cordia - Mile 11 North

Appl. for Pmt. No 7 (Retainage) Texas Cordia - Mile 11 N.

Form Review

Inbox	Reviewed By	Date
Final Approval	Monica Salinas	05/26/2017 02:58 PM
Form Started By: Noemi De Los Rios		Started On: 05/24/2017 01:38 PM
Final Approval Date: 05/26/2017		

CERTIFICATE OF CONSTRUCTION COMPETION

THIS IS TO CERTIFY THAT ON 13 DAY OF March, 2017 A FINAL INSPECTION was made of the project herein described.

CONTRACT

CONTRACT DATE: September 06, 2016
OWNER: Hidalgo County
CONSTRUCTION CONTRACTOR: Texas Cordia Construction, LLC
OF THE CITY OF Edinburg STATE OF Texas

PROJECT DESCRIPTION

CONSTRUCTION OF Hidalgo County Pct. 1 - Paving & Drainage Improvements to: Mile 11 North (FM 1015 - Mile 1 West)
CONTRACT NO: C-16-279-09-06
Located in or near the City/Precinct Of Weslaco / Precinct No. 1

THIS IS TO CERTIFY"

1. That the work has been completed in accordance with the plans and specifications and all addenda, change orders, supplemental agreements thereto, and with the following exceptions:
   None

2. That the sum of $0.00, deducted from the final payment of the Contractor is a fair and equitable settlement for the foregoing except work.

3. That the contractor has presented a "Certificate of Release" starting under oath, that all claims arising out of the performance of work have been fulfilled, and the Owner is released from all claims arising under or by virtue of said contract.

4. That the CONTRACTOR has presented in behalf of itself and its sureties, satisfactory evidence that it is bound to repair, replace, and make good any faulty workmanship and/or materials discovered in the work within a period of one year from this date, as provided in said contract.

5.

Amount of Original Contract	$608,381.00
Present Amount of Contract	$633,331.50
Total Amount of earned to Date	$633,331.50
Less: previous payments	$601,664.92
Balance	$31,666.57
Authorized deductions	$0.00
AMOUNTY OF FINAL PAYMENT	$31,666.57

Exhibit E-L

6. That the final payment in the amount of Thirty-One Thousand Six Hundred sixty-Six dollars Fifty-Seven Cents is now due and payable.

Engineer's Signature

CONCURRED BY:

Texas Cordia Construction, LLC
Contractor's Name

By: Yara M. Corbitt, P.E.

Title: CEO

CONCURRED BY:

Hidalgo County Pct. 1
City/Precinct

By:

Title: Chief Administrator

CONCURRED BY:

HIDALGO COUNTY JUDGE

BY: RAMON GARCIA

TITLE: COUNTY JUDGE

Exhibit E-L

APPLICATION FOR PAYMENT NO. 7 (RETAINAGE)

To: Hidalgo County (OWNER)
From: Texas Cordia Construction, LLC (CONTRACTOR)
Contract: C-16-279-09-06
Project: Hidalgo County Pct. 1-Paving & Drainage Improvements to: Mile 11 North (FM 1015-Mile 1 West)
Owner's Contract No. C-16-279-09-06 Engineer's Project No. _____
For Work accomplished through the date of: April 27, 2017

1. Original Contract Price:		$ 608,381.00
2. Net change by Change Order and Written Agreements(+or-):		$ 24,950.50
3. Current Contract Price (1 plus 2):		$ 633,331.50
4. Total completed and stored to date:		$ 633,331.50 ✓
5. Retainage (per Agreement):		
5% of completed Work:	$ -	
5% of stored material	$ -	
Total Retainage:		$ -
6. Total completed and stored to date less retainage (4 minus 5)		$ 633,331.50
7. Less previous Application for Payments:		$ 601,664.92
8. AMOUNT DUE THIS APPLICATION (6 MINUS 7)		$ 31,666.57 ✓

Accompanying Documentation:

ESTIMATE QUANTITY WORKSHEET
SCHEDULE OF VALUES
LIST OF SUPPLIERS AND SUB CONTRACTORS
TxDOT Form 252 Contract Time Statement
PARTIAL WAIVER OF LIENS
PAYROLL

CONTRACTOR'S Certification:
The undersigned CONTRACTOR certifies that (1) all previous progress payments received from OWNER on account of Work done under the Contract referred to above have been applied on account to discharge CONTRACTOR'S legitimate obligations incurred in connection with Work covered by prior Applications for Payment numbered 1 through 7 inclusive: (2) title of all Work, materials and equipment incorporated in said Work or otherwise listed in or covered by this Application for Payment will pass to OWNER at time of payment free and clear of all Liens, security interests and encumbrances (except such as are covered by a Bond acceptable to OWNER indemnifying OWNER against any such Lien, security interest or encumbrance); and (3) all Work covered by this Application for Payments is in accordance with the Contract Documents and not defective.

Date: 4/27/17

Texas Cordia Construction, LLC
CONTRACTOR

Yara M. Corbitt, P.E., CEO

State of Texas
County of Hidalgo
Subscribed and sworn to before me this 27 day of April, 2017

ISABEL G. MARTINEZ
My Notary ID # 128118614
Expires December 3, 2017

Notary Public
My Commission expires: 12/3/17

Payment of the above AMOUNT DUE THIS APPLICATION is recommended.
Date: 5-11-2017

SAM Engineering & Surveying
ENGINEER
By:

Pct. 1
C.I.P.
7-1350-431-00-121-214-0-721
PO# 751918

INVOICE RECEIVED BY
Mimi Cruz on 5/23/17
GOODS/SERVICES RECEIVED BY:
Oscar Gonzalez 4/27/17

Texas Cordia Construction, LLC Contractor Name
10/25/2016 Starting Date
03/22/2017 Project Ending Date
5% Retainage Percent

Application No: 7
Application Date: 5/23/2017
Period To: 4/27/2017
Engineer Firm: SAM Engineering & Surveying

Summary

Contract No.	Project Name	Original Schedule Value	Change Order #1	Revised Schedule Value	Application #1	Retainage for App #1	Payment for Application #1	Material on Hand (MOH)	Retainage for MOH	Payment for MOH	Payment for Application #1 Plus MOH	Application #2	Retainage for App #2	Payment for Application # 2	Material on Hand (MOH)	Retainage for MOH	Payment for MOH	Payment for Application #2 Plus MOH	Application #3	Retainage for App #3	Payment for Application # 3	Application #4	Retainage for App #4	Payment for Application # 4	Application #5	Retainage for App #5	Payment for Application # 5	Application #6	Retainage for App #6	Payment for Application #6	Application #7	Retainage for App #7	Payment for Application #7	Total Complete to Date	Retainage to Date	Total Complete Less Retainage	Previous Payment	Balance to Finish
C-16-279-09-06	Hidalgo County Pct. 1-Paving & Drainage Improvements to Mile 11 North (FM 1015-Mile 1 West)	$608,381.00	$24,950.50	$633,331.50	$72,777.00	$3,638.85	$69,138.15	$8,495.20	$424.76	$8,070.44	$77,208.59	$171,718.80	$8,585.94	$163,132.86	$3,491.60	$174.58	$3,317.02	$166,449.88	$188,319.90	$9,416.00	$178,903.91	$170,474.50	$8,523.73	$161,950.78	$1,600.00	$80.00	$1,520.00	$16,454.50	$822.73	$15,631.78				$633,331.50	$31,666.58	$601,664.93	$601,664.93	$0.00

Texas Cordia Construction, LLC — Contractor Name
10/25/2016 — Starting Date
3/22/2017 — Project Ending Date
Hidalgo County Pct. 1-Mile 11 North(FM 1015-Mile 1 West) — Engineer's / County Project Description

Application No.: 7 (RETAINAGE)
Application Date: 4/27/2017
Period To: 4/27/2017
Engineer's / County Project No.: C-16-279-09-06

No.	Description	Unit	Original Schedule Value			Revised Schedule Value			Material on Hand			RFP 1			RFP 2			RFP 3			RFP 4			RFP 5			RFP 6			RFP 7			Total to Date	Balance To Finish	
			Rates	Quan	Dollars	Rates	Quan	Dollars	QTY to Date	Item Cost	Item Cost (Total)	RFP 1 Quan	QTY to Date	Item Cost (Monthly)	RFP 2 Quan	QTY to Date	Item Cost (Monthly)	RFP 3 Quan	QTY to Date	Item Cost (Monthly)	RFP 4 Quan	QTY to Date	Item Cost (Monthly)	RFP 5 Quan	QTY to Date	Item Cost (Monthly)	RFP 6 Quan	QTY to Date	Item Cost (Monthly)	RFP 7 Quan	QTY to Date	Item Cost (Monthly)		Quan	Dollars
BASE BID																																		
1	TRAFFIC CONTROL COMPLETE IN PLACE	MO	$ 1,600.00	5	$ 8,000.00			$ -			$ -	1.00	1.00	$ 1,600.00	1.00	2.00	$ 1,600.00	1.00	3.00	$ 1,600.00	1.00	4.00	$ 1,600.00	1.00	5.00	$ 1,600.00		5.00	$ -		5.00	$ -	$ 8,000.00	-	$ -
2	18" RCP, CL III-DRIVEWAY COMPLETE IN PLACE	LF	$ 33.00	1672	$ 55,176.00			$ -			$ -	296.00	296.00	$ 9,768.00	1,204.00	1,500.00	$ 39,732.00	172.00	1,672.00	$ 5,676.00		1,672.00	$ -		1,672.00	$ -		1,672.00	$ -		1,672.00	$ -	$ 55,176.00	-	$ -
3	24" RCP, CL III-TURNOUT	LF	$ 45.00	188	$ 8,460.00			$ -			$ -	48.00	48.00	$ 2,160.00	140.00	188.00	$ 6,300.00		188.00	$ -		188.00	$ -		188.00	$ -		188.00	$ -		188.00	$ -	$ 8,460.00	-	$ -
4	DRIVEWAY REPAIR-ASPHALT COMPLETE IN PLACE	SY	$ 14.00	1990	$ 27,860.00			$ -			$ -		0.00	$ -		0.00	$ -		0.00	$ -	1,990.00	1,990.00	$ 27,860.00		1,990.00	$ -		1,990.00	$ -		1,990.00	$ -	$ 27,860.00	-	$ -
5	DRIVEWAY REPAIR-CONCRETE COMPLETE IN PLACE	SY	$ 35.00	666	$ 23,310.00			$ -			$ -		0.00	$ -	152.00	152.00	$ 5,320.00	514.00	666.00	$ 17,990.00		666.00	$ -		666.00	$ -		666.00	$ -		666.00	$ -	$ 23,310.00	-	$ -
6	2" HMAC, TYPE D COMPLETE IN PLACE	SY	$ 9.00	24634	$ 221,706.00			$ -			$ -		0.00	$ -		0.00	$ -	12,245.00	12,245.00	$ 110,205.00	12,389.00	24,634.00	$ 111,501.00		24,634.00	$ -		24,634.00	$ -		24,634.00	$ -	$ 221,706.00	-	$ -
7	PRIME COAT ASPHALT MATERIAL (MC-30) COMPLETE IN PLACE	GAL	$ 5.00	4927	$ 24,635.00			$ -			$ -		0.00	$ -		0.00	$ -	2,463.50	2,463.50	$ 12,317.50	2,463.50	4,927.00	$ 12,317.50		4,927.00	$ -		4,927.00	$ -		4,927.00	$ -	$ 24,635.00	-	$ -
8	4" NEW FLEX BASE (CALICHE) COMPLETE IN PLACE	SY	$ 4.00	29,296	$ 117,184.00			$ -			$ -		0.00	$ -	22,529.00	22,529.00	$ 90,116.00	6,767.00	29,296.00	$ 27,068.00		29,296.00	$ -		29,296.00	$ -		29,296.00	$ -		29,296.00	$ -	$ 117,184.00	-	$ -
9	SCARIFY & REWORK EXISTING ROADWAY (4IN) COMPLETE IN PLACE	SY	$ 1.00	29296	$ 29,296.00			$ -			$ -	12024.00	12024.00	$ 12,024.00	12,002.00	24,026.00	$ 12,002.00	5,270.00	29,296.00	$ 5,270.00		29,296.00	$ -		29,296.00	$ -		29,296.00	$ -		29,296.00	$ -	$ 29,296.00	-	$ -
10	3% LIM (BASE STABILIZATION) COMPLETE IN PLACE	TONS	$ 222.00	102	$ 22,644.00			$ -			$ -	50.00	50.00	$ 11,100.00	52.00	102.00	$ 11,544.00		102.00	$ -		102.00	$ -		102.00	$ -		102.00	$ -		102.00	$ -	$ 22,644.00	-	$ -
11	CONSTRUCTION STAKING	LS	$ 4,000.00	1	$ 4,000.00			$ -			$ -	1.00	1.00	$ 4,000.00		1.00	$ -		1.00	$ -		1.00	$ -		1.00	$ -		1.00	$ -		1.00	$ -	$ 4,000.00	-	$ -
12	ROADWAY STRIPING	LS	$ 8,700.00	1	$ 8,700.00			$ -			$ -		0.00	$ -		0.00	$ -		0.00	$ -	1.00	1.00	$ 8,700.00		1.00	$ -		1.00	$ -		1.00	$ -	$ 8,700.00	-	$ -
13	PREPARATION OF RIGHT-OF-WAY	STA	$ 160.00	104	$ 16,640.00			$ -			$ -	52.00	52.00	$ 8,320.00	52.00	104.00	$ 8,320.00		104.00	$ -		104.00	$ -		104.00	$ -		104.00	$ -		104.00	$ -	$ 16,640.00	-	$ -
14	MOBILIZATION	LS	$ 23,805.00	1	$ 23,805.00			$ -			$ -	1.00	1.00	$ 23,805.00		1.00	$ -		1.00	$ -		1.00	$ -		1.00	$ -		1.00	$ -		1.00	$ -	$ 23,805.00	-	$ -
15	24" RCP-SAFETY END TREATMENT	EA	$ 660.00	8	$ 5,280.00			$ -			$ -		0.00	$ -	8.00	8.00	$ 5,280.00		8.00	$ -		8.00	$ -		8.00	$ -		8.00	$ -		8.00	$ -	$ 5,280.00	-	$ -
16	TURNOUTS REPAIR-ASPHALT COMPLETE AND IN PLACE	SY	$ 15.00	779	$ 11,685.00			$ -			$ -		0.00	$ -		0.00	$ -	779.00	779.00	$ 11,685.00		779.00	$ -		779.00	$ -		779.00	$ -		779.00	$ -	$ 11,685.00	-	$ -
	TOTAL BASE BID				$ 608,381.00			$ -			$ -			$ 72,777.00			$ 180,214.00			$ 191,811.50			$ 161,978.50			$ 1,600.00			$ -			$ -	$ 608,381.00		$ -
CHANGE ORDER #1																																		
01-01	ADDITIONAL 18-INCH RCP, CL III	LF				$ 33.00	170.0	$ 5,610.00			$ -		0.00	$ -		0.00	$ -		0.00	$ -	170.00	170.00	$ 5,610.00		170.00	$ -		170.00	$ -		170.00	$ -	$ 5,610.00	-	$ -
01-02	DRIVE WAY REPAIR - ASPHALT CIP	SY				$ 14.00	24.0	$ 336.00			$ -		0.00	$ -		0.00	$ -		0.00	$ -	24.00	24.00	$ 336.00		24.00	$ -		24.00	$ -		24.00	$ -	$ 336.00	-	$ -
01-03	18-INCH, CL III - DRIVEWAY CIP	LF				$ 33.00	20.0	$ 660.00			$ -		0.00	$ -		0.00	$ -		0.00	$ -	20.00	20.00	$ 660.00		20.00	$ -		20.00	$ -		20.00	$ -	$ 660.00	-	$ -
01-04	DRIVEWAY REPAIR - CONCRETE CIP	LF				$ 35.00	27.0	$ 945.00			$ -		0.00	$ -		0.00	$ -		0.00	$ -	27.00	27.00	$ 945.00		27.00	$ -		27.00	$ -		27.00	$ -	$ 945.00	-	$ -
01-05	DRIVEWAY REPAIR - CONCRETE CIP					$ 35.00	27.0	$ 945.00			$ -		0.00	$ -		0.00	$ -		0.00	$ -	27.00	27.00	$ 945.00		27.00	$ -		27.00	$ -		27.00	$ -	$ 945.00	-	$ -
	TOTAL CHANGE ORDER #1				$ -			$ 8,496.00			$ -			$ -			$ -			$ -			$ 8,496.00			$ -			$ -			$ -	$ 8,496.00		$ -
CHANGE ORDER #2																																		
02-01	18" RCP, CL III-DRIVEWAY COMPLETE IN PLACE	LF				$ 33.0000	16.00	$ 528.00			$ -		0.00	$ -		0.00	$ -		0.00	$ -		0.00	$ -		0.00	$ -	16.00	16.00	$ 528.00		16.00	$ -	$ 528.00	-	$ -
02-02	ADDITONAL CONCRETE - DRIVE WAY REPAIR - ASPHALT CIP	SY				$ 14.0000	35.00	$ 490.00			$ -		0.00	$ -		0.00	$ -		0.00	$ -		0.00	$ -		0.00	$ -	35.00	35.00	$ 490.00		35.00	$ -	$ 490.00	-	$ -
02-03	18" RCP, CL III-DRIVEWAY COMPLETE IN PLACE	LF				$ 33.0000	24.00	$ 792.00			$ -		0.00	$ -		0.00	$ -		0.00	$ -		0.00	$ -		0.00	$ -	24.00	24.00	$ 792.00		24.00	$ -	$ 792.00	-	$ -
02-04	DRIVE WAY REPAIR - ASPHALT CIP	SY				$ 14.0000	25.00	$ 350.00			$ -		0.00	$ -		0.00	$ -		0.00	$ -		0.00	$ -		0.00	$ -	25.00	25.00	$ 350.00		25.00	$ -	$ 350.00	-	$ -
02-05	18" RCP, CL III-DRIVEWAY COMPLETE IN PLACE	LF				$ 33.0000	40.00	$ 1,320.00			$ -		0.00	$ -		0.00	$ -		0.00	$ -		0.00	$ -		0.00	$ -	40.00	40.00	$ 1,320.00		40.00	$ -	$ 1,320.00	-	$ -
02-06	NEW CUT & RESTORE PAVMENT	LS				$ 5,938.9800	1.00	$ 5,938.98			$ -		0.00	$ -		0.00	$ -		0.00	$ -		0.00	$ -		0.00	$ -	1.00	1.00	$ 5,938.98		1.00	$ -	$ 5,938.98	-	$ -
02-07	NEW REMOVE AND DISPOSE CONCRETE	LS				$ 1,935.5200	1.00	$ 1,935.52			$ -		0.00	$ -		0.00	$ -		0.00	$ -		0.00	$ -		0.00	$ -	1.00	1.00	$ 1,935.52		1.00	$ -	$ 1,935.52	-	$ -
02-08	NEW 6" CONCRETE DRIVEWAY	LS				$ 3,500.0000	1.00	$ 3,500.00			$ -		0.00	$ -		0.00	$ -		0.00	$ -		0.00	$ -		0.00	$ -	1.00	1.00	$ 3,500.00		1.00	$ -	$ 3,500.00	-	$ -
02-09	TRAFFIC CONTROL (1 MONTH)	MO				$ 1,600.0000	1.00	$ 1,600.00			$ -		0.00	$ -		0.00	$ -		0.00	$ -		0.00	$ -		0.00	$ -	1.00	1.00	$ 1,600.00		1.00	$ -	$ 1,600.00	-	$ -
	TOTAL CHANGE ORDER #2				$ -			$ 16,454.50			$ -			$ -			$ -			$ -			$ -			$ -			$ 16,454.50			$ -	$ 16,454.50		$ -
	TOTAL BID				$ 608,381.00			$ 24,950.50			$ -			$ 72,777.00			$ 180,214.00			$ 191,811.50			$ 170,474.50			$ 1,600.00			$ 16,454.50			$ -	$ 633,331.50		$ -

ORIGINAL CONTRACT $ 608,381.00
CHANGE TO DATE $ 24,950.50
CURRENT CONTRACT VALUE $ 633,331.50

TOTAL TO DATE $ 633,331.50
TOTAL MOH $ -
TOTAL AMOUNT EARNED TO DATED $ 633,331.50
LESS RETAINAGE $ -
NET AMOUNT EARNED TO DATE $ 633,331.50
PREVIOUS PAYMENTS $ 601,664.93
NET AMOUNT EARNED THIS PERIOD $ 31,666.57

Purchase Order
COUNTY OF HIDALGO

PO# 751918

DATE: 10/24/16

PAGE NO: 1 of 1

PO TYPE:

VENDOR: 404322 REQ: 00308296

PHONE: (956)971-0289

Fax: (956)386-0289 EMAIL: yara@texascordia.com

TEXAS CORDIA CONSTRUCTION, LLC
3149-A CENTER POINTE DR.
EDINBURG TX 78539

SHIP TO: HIDALGO CO. PCT 1
1902 Joe Stephens Ave
WESLACO TX 78596

CONTACT: RLOZANO (956)968-8733

SITE: COMMISSIONER, PRECINCT 1

CONTRACT NO: C-16-279-09-06

SPECIAL INSTRUCTIONS: RK131

VENDOR NOTES

1. Do not add to, or alter this Purchase Order. This Order is not renewable.
2. TAX EXEMPTION: This Purchase Order may be accepted in lieu of Exemption Certificate.
3. This Order is also placed F.O.B. Destination. Vendor must repay all shipping costs.
4. Invoice each Purchase Order singly. Original invoices are required customer copy may be accepted. Out number must appear on all invoices, bills of lading, and packages.
5. Payment will be made only for bona fide and full completed orders, unless otherwise attached.

QTY	UOM	DESCRIPTION	UNIT PRICE	AMOUNT
		DO NOT DUPLICATE ORDER		
		C-16-279-09-06		
1.00	EACH	CC PAVING & DRAINAGE IMPROVEMENTS TO: MILE 11 NORTH (FM 1015 - MILE 1 WEST)	608,381.00	608,381.00
		TOTAL:		608,381.00
		********** For Hidalgo County use only		
		6-1350-431-00-121-214-0-721 608,381.00		

Authorized by: Martha L Salazar

AI-60025 **Purchasing Department** **22. C. 2.**

CC - REGULAR

Meeting Date: 05/30/2017

Submitted For: David Fuentes, COMM. PCT. #1

Submitted By: Noemi De Los Rios, COMM. PCT. #1

Department: COMM. PCT. #1

Information

CAPTION

PCT.1

A. Requesting acceptance and approval of Certificate of Substantial Completion as submitted by Asago Construction for the FEMA Road & Drainage Improvements Project - Mile 4 North Road.

B. Acceptance and approval of Application for Payment #2 Final in the amount of $87,674.35 as submitted by Asago Construction for the provision of FEMA Road & Drainage Improvements for Mile 4 North Road under Contract# C-16-364-11-01

BACKGROUND

PCT.1 FEMA Road & Drainage Improvements - Mile 4 North Road

Fiscal Impact

CALENDAR YEAR: 2017 **ACCT. #:** 7-1280-431-00-121-812-5-721

FUNDS AVAILABLE Y/N?: Y **MATCHING FUNDS Y/N?:**

BUDGETARY IMPACT:

PCT.1
PO# 753773

C-16-364-11-01

Attachments

Cert. of Substantial Completion Asago Construction - Mile 4 North Road

Appl. for Pmt. #2 Final Asago Construction - Mile 4 North Road

---

Form Review

Inbox	Reviewed By	Date
Final Approval	Monica Salinas	05/26/2017 02:58 PM

Form Started By: Noemi De Los Rios Started On: 05/25/2017 04:34 PM

Final Approval Date: 05/26/2017

Certificate of Substantial Completion

PROJECT: FEMA Road & Drainage Improvements: Mile 4 North Road

PROJECT NUMBER: C-16-364-11-01

OWNER: Hidalgo County **HIDALGO COUNTY PRECINCT NO. 1**

CONTRACTOR: Asago LLC, dba Asago Construction

The Work performed under this Contract has been reviewed and found, to the Engineer's best knowledge, information and belief, to be substantially complete. Substantial Completion is the stage in the progress of the Work when the Work or designated portion is sufficiently complete in accordance with the Contract Documents so that the owner can occupy or utilize the Work for its intended use. The date of Substantial Completion of the Project or portion designated above is the date of issuance established by this Certificate, which is also the date of commencement of applicable warranties required by the Contract Documents, except as stated below: Construction time is stopped at the day of Issuance.

LeFevre Engineering & Management Consulting, LLC — Engineer

By

May 5, 2017 — Date of Issuance

A list of items to be completed or corrected is attached hereto. The failure to include any items on such list does not alter the responsibility of the Contractor to complete all Work in accordance with the Contract Documents. Unless otherwise agreed to in writing, the date of commencement of warranties for items on the attached list will be the date of issuance of the final Certificate of Payment or the date of final payment.

Cost estimate of Work that is incomplete or defective: $ N/A .

The Contractor will complete or correct the Work on the list of items attached hereto and complete the work by N/A .
Date

The Owner accepts the Work or designated portion as substantially complete and will assume full possession at ____ am/pm on N/A .
Date

Owner

By

Date

Hidalgo County Judge

By

Date

APPLICATION FOR PAYMENT NO. 2 & FINAL

To: **HIDALGO COUNTY** (OWNER)
From: **ASAGO LLC, dba ASAGO CONSTRUCTION** (CONTRACTOR)
Contract: **C-16-364-11-01**
Project: **Hidalgo County Precinct No. 1**
FEMA Road Drainage Improvements - Mile 4 North Road
Owner's Contract No. **C-16-364-11-01** PO# 753773
For Work accomplished through the date **May 5, 2017**

1. Original Contract Price:	$143,045.30 ✓
2. Net change by Change Order and Written Agreements(+or-):	$0.00
3. Current Contract Price (1 plus 2):	$143,045.30
4. Total completed and stored to date:	$143,045.30
5. Retainage (per Agreement):	
10% of completed Work: $14,304.53	
10% of stored material	
Total Retainage:	$14,304.53
6. Total completed and stored to date less retainage (4 minus 5)	$128,740.77
7. Less previous Application for Payments:	$41,066.42
8. AMOUNT DUE THIS APPLICATION (6 MINUS 7)	$87,674.35 ✓

Accompanying Documentation:

APPLICATION FOR PAYMENT
ESTIMATE AND QUANTITY
SCHEDULE OF VALUES
CONTRACT TIME STATEMENT
LIST OF SUPPLIERS
PARTIAL WAIVER OF LIEN
PAYROLL & COMPLIANCE REPORTS

CONTRACTOR'S Certification:

The undersigned CONTRACTOR certifies that (1) all previous progress payments received from OWNER on account of Work done under the Contract referred to above have been applied on account to discharge CONTRACTOR'S legitimate obligations incurred in connection with Work covered by prior Applications for Payment numbered 1 through 2 & FINAL inclusive: (2) title of all Work, materials and equipment incorporated in said Work or otherwise listed in or covered by this Application for Payment will pass to OWNER at time of payment free and clear of all Liens, security interests and encumbrances (except such as are covered by a Bond acceptable to OWNER indemnifying OWNER against any such Lien, security interest or encumbrance); and (3) all Work covered by this Application for Payments is in accordance with the Contract Documents and not defective.

Date: May 5, 2017

ASAGO LLC, dba ASAGO CONSTRUCTION
CONTRACTOR

By: _____
Raul Iglesias, Member

State of Texas
County of Hidalgo
Subscribed and sworn to before me this 5th day of May 2017

Sandra Ramos
Notary Public
My Commission expires: Jan 25, 2021

SANDRA RAMOS
Notary Public, State of Texas
Comm. Expires 01-25-2021
Notary ID 11116892

Payment of the above AMOUNT DUE THIS APPLICATION is recommended.

Date: 5/11/17

LeFEVRE Enginerring & Management Consulting, LLC
ENGINEER

By: _____

Asago LLC, dba, Asago Construction	Contractor's Name
January 25, 2017	Starting Date
May 5, 2017	Project Ending Date
10%	Retainage Percent

Appilication No.	2 & FINAL
Application Date:	May 5, 2017
Period To:	May 5, 2017
Engineer Firm:	Lefevre Engineering

Summary											
Conctract	Project Name	Original Scheduled Values	Revised Schedule Values	Payment Application No. 1	Payment Application No. 2	Total to Date	Balance To Finish	Retainage	Net	Payment To Date	Payment Due
C-16-364-11-01	Mile 2 1/2 East	$143,045.30	$143,045.30	$45,629.36	$97,415.95	$143,045.30	$0.00	$14,304.53	$128,740.77	$41,066.42	$87,674.35
Totals											

Estimate Quantity Update Worksheet

Contractor Name:	Asago Construction
Starting Date:	1/25/2017
Project Ending Date:	5/5/2017
Engineer's / County Project Desc.:	FEMA Road Drainage Improvements - Mile 4 North Road

Application:	2 & FINAL
Application Date:	5/5/2017
Period To:	5/5/2017
PO#	753773

ITEM NO	DESCRIPTION	UNIT	Revised Schedule Value			Application # 1			Application # 2				Balance to Finish	
			Quantity	Original Rates	Dollars	Monthly Quantity	QTY to Date	Item Cost (Monthly)	Monthly Quantity	QTY to Date	Item Cost (Monthly)	Total to Date	Quantity	Dollars
	(905) ROADWAY													
1-1	Mobilization, Bonds and Insurance	LS	1.00	$3,000.00	$3,000.00	1.00	1.00	$3,000.00		1.00	$0.00	$3,000.00	0.00	$0.00
1-2	Traffic Control Plan	LS	1.00	$3,000.00	$3,000.00	1.00	1.00	$3,000.00		1.00	$0.00	$3,000.00	0.00	$0.00
1-3	Excavate and haul away for reclamation	SY	8,213.33	$1.00	$8,213.33	8,213.33	8,213.33	$8,213.33		8,213.33	$0.00	$8,213.33	0.00	$0.00
1-4	Install Biaxial Geogrid #1200 material over SubBase	SY	8,213.33	$1.25	$10,266.66	4,106.67	4,106.67	$5,133.34	4,106.66	8,213.33	$5,133.32	$10,266.66	0.00	$0.00
1-5	Furnish and Install 6-inch deep compacted Caliche	SY	8,213.33	$4.25	$34,906.65	4,106.67	4,106.67	$17,453.35	4,106.66	8,213.33	$17,453.31	$34,906.65	0.00	$0.00
1-6	Furnish and Apply a 1.5% Lime Treatment to the Ca	SY	8,213.33	$2.15	$17,658.66	4,106.67	4,106.67	$8,829.34	4,106.66	8,213.33	$8,829.32	$17,658.66	0.00	$0.00
1-7	Furnish and Apply a Prime Coat (MC-30)(0.2 GAL	SY	7,040.00	$1.00	$7,040.00		0.00	$0.00	7,040.00	7,040.00	$7,040.00	$7,040.00	0.00	$0.00
1-8	Furnish, Install and Roll a 2-inch deep HMAC Type	SY	7,040.00	$7.50	$52,800.00		0.00	$0.00	7,040.00	7,040.00	$52,800.00	$52,800.00	0.00	$0.00
1-9	Install pavement markings and lines.	SY	7,040.00	$0.50	$3,520.00		0.00	$0.00	7,040.00	7,040.00	$3,520.00	$3,520.00	0.00	$0.00
1-10	Regrade Roadside Ditches	LF	5,280.00	$0.50	$2,640.00		0.00	$0.00	5,280.00	5,280.00	$2,640.00	$2,640.00	0.00	$0.00
	Total Roadway				**$143,045.30**			✓**$45,629.35**		0.00	**$97,415.95**			**$0.00**
						Monthly Totals:		**$45,629.35**			✓ **$97,415.95**	**$143,045.30**		**$0.00**

Total to Date $143,045.30

Prepared and Checked By:

Signature: _____ **Date:** May 5, 2017

Printed Name: Raul Iglesias

AI-60029 **Purchasing Department** **22. C. 3.**

CC - REGULAR

Meeting Date: 05/30/2017

Submitted For: David Fuentes, COMM. PCT. #1

Submitted By: Noemi De Los Rios, COMM. PCT. #1

Department: COMM. PCT. #1

Information

CAPTION

PCT.1

A. Acceptance & Approval of Certificate of Construction Completion as submitted by Asago Construction for the FEMA Road & Drainage Improvements - Mile 4 North Road.
B. Acceptance & Approval of Application for Payment #3 Retainage in the amount of $14,304.53 as submitted by Asago Construction for the provision of FEMA Road & Drainage Improvements - Mile 4 North Road under Contract# C-16-364-11-01.

BACKGROUND

PCT.1 FEMA Road & Drainage Improvements - Mile 4 North Road

Fiscal Impact

CALENDAR YEAR: 2017 **ACCT. #:** 7-1280-431-00-121-812-5-721

FUNDS AVAILABLE Y/N?: Y **MATCHING FUNDS Y/N?:**

BUDGETARY IMPACT:

PCT.1
PO# 753773
C-16-364-11-01

Attachments

Cert. of Const. Completion Asago Const. - Mile 4 North Rd.
Appl. for Pmt. #3 Retainage Asago Const. - Mile 4 North Road

Form Review

Inbox	Reviewed By	Date
Final Approval	Monica Salinas	05/26/2017 02:58 PM

Form Started By: Noemi De Los Rios Started On: 05/25/2017 04:56 PM
Final Approval Date: 05/26/2017

CERTIFICATE OF CONSTRUCTION COMPLETION

THIS IS TO CERTIFY THAT ON 11th DAY OF May, **2017**, A FINAL INSPECTION was made of the project herein described:

CONTRACT

DATE: **November 1, 2016**
OWNER: **Hidalgo County**
CONSTRUCTION CONTRACTOR: **Asago, LLC dba Asago Construction**
OF THE CITY OF **Mission** STATE OF **Texas**

PROJECT DESCRIPTION

CONSTRUCTION OF **FEMA Road and Drainage Improvements – Mile 4 North Road**
CONTRACT NO. **C—16-364-11-01** located in or near the City/Pct. of **Hidalgo County Precinct No. 1**

THIS IS TO CERTIFY:

1. That the work has been completed in accordance with the plans and specification and all addenda, change orders, supplemental agreements thereto, and with the following exceptions: **N/A**

2. That the sum of **N/A** ($), deducted from the final payment of the Contractor is a fair and equitable settlement for the foregoing except work.

3. That the Contractor has presented a "Certificate of Release" stating under oath, that all claims arising out of the performance of work have been fulfilled, and the OWNER is released from all claims arising under or virtue of said contract.

4. That the CONTRACTOR has presented in behalf of itself and its sureties, satisfactory evidence that it is bound to repair, replace, and make good any faulty workmanship and/or materials discovered in the work within a period of one year from this date, as provided in said contract.

5.

Amount of Original Contract	$ 143,045.30
Present Amount of Contract	143,045.30
Total Amount Earned to Date	143,045.30
Less Previous Payments	128,740.77
Balance	14,304.53
Authorized Deductions	0.00
AMOUNT OF FINAL PAYMENT	$ 14,304.53

6. That the final payment in the amount of $ **Fourteen Thousand Three Hundred Four** dollars and **Fifty-Three** cents ($ **14,304.53**) is now due and payable.

Lefevre Engineering

CONCURRED BY:

ASAGO, LLC dba Asago Construction
CONTRACTOR'S NAME

BY: _____

TITLE: Member

CONCURRED BY:

HIDALGO COUNTY PRECINCT !
COUNTY/PRECINCT

BY: _____

TITLE: CHIEF ADMINISTRATOR

CONCURRED BY:

HIDALGO COUNTY JUDGE

BY: RAMON GARCIA

TITLE: COUNTY JUDGE

Exhibit E-M

APPLICATION FOR PAYMENT NO. 3 & RETAINAGE

To: **HIDALGO COUNTY** (OWNER)
From: **ASAGO LLC, dba ASAGO CONSTRUCTION** (CONTRACTOR)
Contract: **C-16-364-11-01**
Project: **Hidalgo County Precinct No. 1**
FEMA Road Drainage Improvements - Mile 4 North Road
Owner's Contract No. **C-16-364-11-01** PO# 753773
For Work accomplished through the date **May 9, 2017**

1. Original Contract Price:	$143,045.30
2. Net change by Change Order and Written Agreements(+or-):	$0.00
3. Current Contract Price (1 plus 2):	$143,045.30
4. Total completed and stored to date:	$143,045.30
5. Retainage (per Agreement):	
10% of completed Work:	
10% of stored material	
Total Retainage:	$0.00
6. Total completed and stored to date less retainage (4 minus 5)	$143,045.30
7. Less previous Application for Payments:	$128,740.77
8. AMOUNT DUE THIS APPLICATION (6 MINUS 7)	$14,304.53

Accompanying Documentation:

APPLICATION FOR PAYMENT
CONTRACTOR'S AFFIDAVIT OF RELEASE OF LIENS
CONTRACTOR'S AFFIDAVIT OF PAYMENT OF DEBTS AND CLAIMS
CERTIFICATE OF CONSTRUCTION COMPLETION

CONTRACTOR'S Certification:

The undersigned CONTRACTOR certifies that (1) all previous progress payments received from OWNER on account of Work done under the Contract referred to above have been applied on account to discharge CONTRACTOR'S legitimate obligations incurred in connection with Work covered by prior Applications for Payment numbered 1 through 3 & RET. inclusive: (2) title of all Work, materials and equipment incorporated in said Work or otherwise listed in or covered by this Application for Payment will pass to OWNER at time of payment free and clear of all Liens, security interests and encumbrances (except such as are covered by a Bond acceptable to OWNER indemnifying OWNER against any such Lien, security interest or encumbrance); and (3) all Work covered by this Application for Payments is in accordance with the Contract Documents and not defective.

Date: May 9, 2017

ASAGO LLC, dba ASAGO CONSTRUCTION
CONTRACTOR

By: _____
Raul Iglesias, Member

State of Texas
County of Hidalgo
Subscribed and sworn to before me this 9th day of May 2017

_____
Notary Public
My Commission expires: 01-25-2021

SANDRA RAMOS
Notary Public, State of Texas
Comm. Expires 01-25-2021
Notary ID 11116892

Payment of the above AMOUNT DUE THIS APPLICATION is recommended.

Date: 5-11-17

LeFEVRE Enginerring & Management Consulting, LLC
ENGINEER

By: _____

Estimate Quantity Update Worksheet

Contractor Name:	Asago Construction
Starting Date:	1/25/2017
Project Ending Date:	5/5/2017
Engineer's / County Project Desc.:	FEMA Road Drainage Improvements - Mile 4 North Road

Application:	3 & Retainage
Application Date:	5/9/2017
Period To:	5/9/2017
PO#	753773

ITEM NO	DESCRIPTION	UNIT	Revised Schedule Value			Application # 1			Application # 2				Retainage	Balance to Finish	
			Quantity	Original Rates	Dollars	Monthly Quantity	QTY to Date	Item Cost (Monthly)	Monthly Quantity	QTY to Date	Item Cost (Monthly)	Total to Date	To Date (10%)	Quantity	Dollars
	(905) ROADWAY														
1-1	Mobilization, Bonds and Insurance	LS	1.00	$3,000.00	$3,000.00	1.00	1.00	$3,000.00		1.00	$0.00	$3,000.00	$0.00	0.00	$0.00
1-2	Traffic Control Plan	LS	1.00	$3,000.00	$3,000.00	1.00	1.00	$3,000.00		1.00	$0.00	$3,000.00	$0.00	0.00	$0.00
1-3	Excavate and haul away for reclamation	SY	8,213.33	$1.00	$8,213.33	8,213.33	8,213.33	$8,213.33		8,213.33	$0.00	$8,213.33	$0.00	0.00	$0.00
1-4	Install Biaxial Geogrid #1200 material over SubBas	SY	8,213.33	$1.25	$10,266.66	4,106.67	4,106.67	$5,133.34	4,106.66	8,213.33	$5,133.32	$10,266.66	$0.00	0.00	$0.00
1-5	Furnish and Install 6-inch deep compacted Caliche	SY	8,213.33	$4.25	$34,906.65	4,106.67	4,106.67	$17,453.35	4,106.66	8,213.33	$17,453.31	$34,906.65	$0.00	0.00	$0.00
1-6	Furnish and Apply a 1.5% Lime Treatment to the C	SY	8,213.33	$2.15	$17,658.66	4,106.67	4,106.67	$8,829.34	4,106.66	8,213.33	$8,829.32	$17,658.66	$0.00	0.00	$0.00
1-7	Furnish and Apply a Prime Coat (MC-30)(0.2 GAL	SY	7,040.00	$1.00	$7,040.00		0.00	$0.00	7,040.00	7,040.00	$7,040.00	$7,040.00	$0.00	0.00	$0.00
1-8	Furnish, Install and Roll a 2-inch deep HMAC Type	SY	7,040.00	$7.50	$52,800.00		0.00	$0.00	7,040.00	7,040.00	$52,800.00	$52,800.00	$0.00	0.00	$0.00
1-9	Install pavement markings and lines.	SY	7,040.00	$0.50	$3,520.00		0.00	$0.00	7,040.00	7,040.00	$3,520.00	$3,520.00	$0.00	0.00	$0.00
1-10	Regrade Roadside Ditches	LF	5,280.00	$0.50	$2,640.00		0.00	$0.00	5,280.00	5,280.00	$2,640.00	$2,640.00	$0.00	0.00	$0.00
	Total Roadway				**$143,045.30**			**$45,629.35**		0.00	**$97,415.95**		**$0.00**		**$0.00**
						Monthly Totals:		**$45,629.35**			**$97,415.95**	**$143,045.30**			**$0.00**

Total to Date $143,045.30

Prepared and Checked By:

Signature: _____ **Date:** May 9, 2017

Printed Name: Raul Iglesias

Asago LLC, dba, Asago Construction — Contractor's Name
January 25, 2017 — Starting Date
May 9, 2017 — Project Ending Date
10% — Retainage Percent

Appilication No. 3 & Retainage
Application Date: May 9, 2017
Period To: May 9, 2017
Engineer Firm: Lefevre Engineering

Summary

Contract	Project Name	Original Scheduled Values	Revised Schedule Values	Payment Application No. 1	Payment Application No. 2	Total to Date	Balance To Finish	Retainage	Net	Payment To Date	Payment Due
C-16-364-11-01	Mile 4 North	$143,045.30	$143,045.30	$45,629.35	$97,415.95	$143,045.30	$0.00	$0.00	$143,045.30	$128,740.77	$14,304.53
Totals											

AI-60052 **22. C. 4.**

CC - REGULAR

Meeting Date: 05/30/2017

Submitted For: Marty Salazar

Submitted By: Darlene Betancourt, PURCHASING DEPT.

Department: PURCHASING DEPT.

Information

CAPTION

A.) Requesting approval of final negotiated Agreement for Professional Engineering Services with L & G Consulting Engineers Inc., as it relates to Mile 6 Project (Contract # C-17-157-05-30) as approved for negotiations by Hidalgo County Commissioners Court on 03/07/2017;
B.) Requesting approval of Work Authorization No. 1 in the amount of $1,614,606.00, with L & G Engineering Services for Mile 6 Project.

BACKGROUND

Fiscal Impact

Attachments

txdot
wa1
1295

Form Review

Inbox	**Reviewed By**	**Date**
Final Approval	Monica Salinas	05/26/2017 02:58 PM

Form Started By: Darlene Betancourt Started On: 05/26/2017 01:55 PM

Final Approval Date: 05/26/2017

Zimbra **jorge.pena1@co.hidalgo.tx.us**

Re: Mile 6 Work Authorization approval

From : Jorge L. Pena <jorge.pena1@co.hidalgo.tx.us> Fri, Ma
Subject : Re: Mile 6 Work Authorization approval
To : Mike Miranda <Mike.Miranda@txdot.gov>
Cc : Amy Smith-Saenz <amy.saenz-smith@co.hidalgo.tx.us>, David Suarez <david.suarez@co.hidalgo.tx.us>, Rey Salazar <rey.salazar@co.hidalgo.tx.us>, Rolando Garcia <rolando.garcia@co.hidalgo.tx.us>, Norma Garza <Norma.Garza@txdot.gov>, Martha Salazar <martha.salazar@co.hidalgo.tx.us>, Darlene H. Betancourt <darlene.betancourt@co.hidalgo.tx.us>

Mike,

Good morning and thank your for the assistance and prompt response. Wishing you and the entire Tx DOT tea
weekend.

Best regards,

Jorge Pena

----- Original Message -----
From: "Mike Miranda" <Mike.Miranda@txdot.gov>
To: "Jorge L. Pena" <jorge.pena1@co.hidalgo.tx.us>
Cc: "Amy Smith-Saenz" <amy.saenz-smith@co.hidalgo.tx.us>, "David Suarez" <david.suarez@co.hidalgo.tx.us>,
<rey.salazar@co.hidalgo.tx.us>, "Rolando Garcia" <rolando.garcia@co.hidalgo.tx.us>, "Norma Garza" <Norma.
"Martha Salazar" <martha.salazar@co.hidalgo.tx.us>, "Darlene H. Betancourt" <darlene.betancourt@co.hidalg
Sent: Friday, May 26, 2017 10:17:02 AM
Subject: RE: Mile 6 Work Authorization approval

Good morning, Jorge:

I received final confirmation this morning from our ROW Section. TxDOT has completed the courtesy review
authorization and it is acceptable. The attached email from Norma to Darlene Betancourt serves as further

Please contact me if you have questions.

Respectfully,
Mike

--

Mike Miranda, P.E., PTOE
Project Manager
Advanced Project Development
Pharr District Office
(956) 702-6116

-----Original Message-----
From: Jorge L. Pena [mailto:jorge.pena1@co.hidalgo.tx.us]
Sent: Friday, May 26, 2017 9:42 AM
To: Mike Miranda
Cc: Amy Smith-Saenz; David Suarez; Rey Salazar; Rolando Garcia; Norma Garza; Martha Salazar; Darlene H. B
Subject: Mile 6 Work Authorization approval

Mike,

Good morning, as discussed previously, you've verbally approved the work authorization for Right of Way a
pertains to the Mile 6 project. Attached is Exhibit B with the revision so that you may replace in its en

forward to Tx-DOT correspondence and thank you for all the assistance.

Best regards,

Jorge Pena

----- Original Message -----
From: "Jorge L. Pena" <jorge.pena1@co.hidalgo.tx.us>
To: "Mike Miranda" <mike.miranda@txdot.gov>
Sent: Wednesday, May 24, 2017 6:47:05 PM
Subject: Requested info

Mike,

As requested, attached are the documents needed. Please contact me if you have additional question.

Thank you,

Jorge Peña

Sent from my iPhone
[Connecting Texans to what matters most. Texas Department of Transportation: 1917-2017 #txdot100]
<http://www.dot.state.tx.us/txdot100/>

From : Mike Miranda <Mike.Miranda@txdot.gov> Fri, Ma
Subject : RE: Mile 6 Work Authorization approval
To : Jorge L. Pena <jorge.pena1@co.hidalgo.tx.us>
Cc : Amy Smith-Saenz <amy.saenz-smith@co.hidalgo.tx.us>, David Suarez <david.suarez@co.hidalgo.tx.us>, Rey Salazar <rey.salazar@co.hidalgo.tx.us>, Rolando Garcia <rolando.garcia@co.hidalgo.tx.us>, Norma Garza <Norma.Garza@txdot.gov>, Martha Salazar <martha.salazar@co.hidalgo.tx.us>, Darlene H. Betancourt <darlene.betancourt@co.hidalgo.tx.us>

Good morning, Jorge:

I received final confirmation this morning from our ROW Section. TxDOT has completed the courtesy review authorization and it is acceptable. The attached email from Norma to Darlene Betancourt serves as further

Please contact me if you have questions.

Respectfully,
Mike

--

Mike Miranda, P.E., PTOE
Project Manager
Advanced Project Development
Pharr District Office
(956) 702-6116

-----Original Message-----
From: Jorge L. Pena [mailto:jorge.pena1@co.hidalgo.tx.us]
Sent: Friday, May 26, 2017 9:42 AM
To: Mike Miranda

Cc: Amy Smith-Saenz; David Suarez; Rey Salazar; Rolando Garcia; Norma Garza; Martha Salazar; Darlene H. B
Subject: Mile 6 Work Authorization approval

Mike,

Good morning, as discussed previously, you've verbally approved the work authorization for Right of Way a
pertains to the Mile 6 project. Attached is Exhibit B with the revision so that you may replace in its en
forward to Tx-DOT correspondence and thank you for all the assistance.

Best regards,

Jorge Pena

----- Original Message -----
From: "Jorge L. Pena" <jorge.pena1@co.hidalgo.tx.us>
To: "Mike Miranda" <mike.miranda@txdot.gov>
Sent: Wednesday, May 24, 2017 6:47:05 PM
Subject: Requested info

Mike,

As requested, attached are the documents needed. Please contact me if you have additional question.

Thank you,

Jorge Peña

Sent from my iPhone
[Connecting Texans to what matters most. Texas Department of Transportation: 1917-2017 #txdot100]
<http://www.dot.state.tx.us/txdot100/>

From : Norma Garza <Norma.Garza@txdot.gov> Fri, May
Subject : FW: Mile 6 Project
To : Mike Miranda <Mike.Miranda@txdot.gov>

FYI

From: Norma Garza
Sent: Thursday, May 25, 2017 10:25 AM
To: Darlene H. Betancourt
Cc: Amy Saenz-Smith; Jorge Peña; Rey Salazar; Dina Trevino; Yvette Salinas
Subject: Re: Mile 6 Project

Darlene,
My staff and I are currently in route to Laredo for a training and will not be back to the office until tomorrow.

But, as we discuss we are providing a review to verify that the acquisition consultant is following the proper requirements and regulations. We have completed our revi
The executed AFA is to reimburse the County for the land acquisition and associated fees, not the acquisition services by L&G.

Let me know if you have any other questions.

Norma Y. Garza, P.E.
Advance Planning/ Project Management Supervisor
District RMA Coordinator
TxDOT- Pharr District
Telephone: (956) 702-6180
Mobile: (956) 638- 3518
Email: Norma.Garza@txdot.gov

Sent from my iPhone

On May 25, 2017, at 9:24 AM, Darlene H. Betancourt <darlene.betancourt@co.hidalgo.tx.us> wrote:

> Good Morning Norma,
>
> To recap our telephone conversation, late afternoon yesterday regarding the status of the L & G Consulting Engineering Work Authorization for above-reference
> you advised TXDOT review has been completed and approved in order to allow the County to proceed with our routine protocols regarding these matters.
>
> As you explained, the portion to be reimbursed by TXDOT to Hidalgo County will be the acquisition of the right of way, and not the Professional Services as rel
> particular phase of the project.
>
> Upon submitting final written approval, may you provide a copy to our office for your files.
>
> Thank you once again for your continued cooperation with Hidalgo County and have a great week.
>
> Darlene H. Betancourt, CPPB
> Hidalgo County Purchasing Department
> 2812 S. Business Hwy. 281
> Edinburg, TX. 78541
> 956-292-7000 x-4852

From : Darlene H. Betancourt <darlene.betancourt@co.hidalgo.tx.us> Fri, Ma
Subject : Fwd: Mile 6 Work Authorization approval
To : Yvette Salinas <restored_05122017_yvette.salinas@co.hidalgo.tx.us>
Cc : Jorge Peña <jorge.pena@co.hidalgo.tx.us>, Jorge L. Pena <jorge.pena1@co.hidalgo.tx.us>, Martha Salazar <martha.salazar@co.hidalgo.tx.us>, Amy Saenz-Smith <amy.saenz-smith@co.hidalgo.tx.us>

Yvette.

See recommended revisions by TXDOT and in order to attach to agenda (work authorization). The point of c
Precinct No. 1 is Jorge Pena

Darlene H. Betancourt, CPPB
Hidalgo County Purchasing Department
2812 S. Business Hwy. 281
Edinburg, TX. 78541
956-292-7000 x-4852

----- Forwarded Message -----
From: "Jorge L. Pena" <jorge.pena1@co.hidalgo.tx.us>
To: "Mike Miranda" <mike.miranda@txdot.gov>
Cc: "Amy Smith-Saenz" <amy.saenz-smith@co.hidalgo.tx.us>, "David Suarez" <david.suarez@co.hidalgo.tx.us>,
<rey.salazar@co.hidalgo.tx.us>, "Rolando Garcia" <rolando.garcia@co.hidalgo.tx.us>, "Norma Garza" <norma.
"Martha Salazar" <martha.salazar@co.hidalgo.tx.us>, "Darlene H. Betancourt" <darlene.betancourt@co.hidalg
Sent: Friday, May 26, 2017 9:42:19 AM
Subject: Mile 6 Work Authorization approval

Mike,

Good morning, as discussed previously, you've verbally approved the work authorization for Right of Way a
pertains to the Mile 6 project. Attached is Exhibit B with the revision so that you may replace in its en
forward to Tx-DOT correspondence and thank you for all the assistance.

Best regards,

Jorge Pena

----- Original Message -----
From: "Jorge L. Pena" <jorge.pena1@co.hidalgo.tx.us>
To: "Mike Miranda" <mike.miranda@txdot.gov>
Sent: Wednesday, May 24, 2017 6:47:05 PM
Subject: Requested info

Mike,

As requested, attached are the documents needed. Please contact me if you have additional question.

Thank you,

Jorge Peña

Sent from my iPhone

EXHIBIT B - MILE 6REV-Complete.pdf
394 KB

From : Jorge L. Pena <jorge.pena1@co.hidalgo.tx.us> Fri, Ma
Subject : Mile 6 Work Authorization approval
To : Mike Miranda <mike.miranda@txdot.gov>
Cc : Amy Smith-Saenz <amy.saenz-smith@co.hidalgo.tx.us>, David Suarez <david.suarez@co.hidalgo.tx.us>, Rey Salazar <rey.salazar@co.hidalgo.tx.us>, Rolando Garcia <rolando.garcia@co.hidalgo.tx.us>, Norma Garza <norma.garza@txdot.gov>, Martha Salazar <martha.salazar@co.hidalgo.tx.us>, Darlene H. Betancourt <darlene.betancourt@co.hidalgo.tx.us>

Mike,

Good morning, as discussed previously, you've verbally approved the work authorization for Right of Way a
pertains to the Mile 6 project. Attached is Exhibit B with the revision so that you may replace in its en
forward to Tx-DOT correspondence and thank you for all the assistance.

Best regards,

Jorge Pena

----- Original Message -----
From: "Jorge L. Pena" <jorge.pena1@co.hidalgo.tx.us>
To: "Mike Miranda" <mike.miranda@txdot.gov>
Sent: Wednesday, May 24, 2017 6:47:05 PM
Subject: Requested info

Mike,

As requested, attached are the documents needed. Please contact me if you have additional question.

Thank you,

Jorge Peña

Sent from my iPhone

EXHIBIT B - MILE 6REV-Complete.pdf
394 KB

From : Jorge L. Pena <jorge.pena1@co.hidalgo.tx.us> Wed, Ma
Subject : Requested info
To : Mike Miranda <mike.miranda@txdot.gov>

Mike,

As requested, attached are the documents needed. Please contact me if you have additional question.

Thank you,

Jorge Peña

Sent from my iPhone

Mile 6 Exhibit C & D.pdf
2 MB

HIDALGO COUNTY
Professional Engineering Services
Contract # C-17-103-05-30
Work Authorization Form

WORK AUTHORIZATION NO. 1

THIS WORK AUTHORIZATION is made pursuant to the terms and conditions of Article 1 of the Agreement made by and between **HIDALGO COUNTY**, action herein by and through the **Commissioner's Court**, hereinafter called the "**Owner**," and, **L&G Consulting Engineers, Inc.** *d/b/a* **L&G Engineering**, professional engineers of Mercedes, Texas hereinafter called "**Engineer**".

PART 1. SCOPE OF WORK

The purpose of this Work Authorization is for the **Engineer** to provide Professional Engineering Services required for the completion of the Environmental Assessment Re-Evaluation, PS&E Development, Right-of-Way Acquisition Services and Compensable Utility Management for the Mile 6 from Mile 9 to Mile 11 project.

The scope of services to be provided by the **Owner** is identified in ***EXHIBIT "A" - Scope of Services to be provided by the Owner*** attached hereto.

The scope of services to be provided by the **Engineer** is identified in ***EXHIBIT "B" - Scope of Services to be provided by the Engineer*** attached hereto.

PART 2. ESTIMATED COST

The estimated cost for services under this Work Authorization is **$1,614,606.00**. This amount is based upon the costs outlined in the Estimated **Cost Proposal** attached hereto as ***EXHIBIT "D-1" - Estimated Man-hour Breakdown.***

PART 3. PAYMENT

Compensation and payment to the Engineer for the services established under this Work Authorization shall be made in accordance with **Article 6** of the Agreement.

PART 4. FUNDING

This Work Authorization No. 1 shall be funded through funding source:

Account No. _____

Requisition Number _____ **(MUST BE INCLUDED AFTER CC APPROVAL)**

PART 5. PERIOD OF SERVICE

This Work Authorization shall become effective on the date of final acceptance of the parties hereto, and terminate upon completion of scopes of the work authorization, as identified on *EXHIBIT "C" - Work Schedule.*

PART 6. RESPONSIBILITIES AND OBLIGATIONS

This Authorization does not waive the parties' responsibilities and obligations provided under the Agreement.

PART 7. ACKNOWLEDGEMENT AND CONFIRMATION

Acknowledgement and confirmation by Hidalgo County Precinct No. 1, Commissioner David Fuentes as to the content and detail of this Work Authorization No. 1.

HIDALGO COUNTY
COMMISSIONER PRECINCT NO. 1

BY:_____

PART 8. ACCEPTANCE AND APPROVAL

This Work Authorization is hereby accepted, approved by Hidalgo County Commissioners' Court on _____ as indicated below.

THE ENGINEER:
L&G ENGINEERING

_____
By: Jacinto Garza, P.E.
President

THE OWNER:
HIDALGO COUNTY

_____
By: Ramon Garcia,
County Judge

ATTEST:

_____
By: Arturo Guajardo, Jr., County Clerk

LIST OF EXHIBITS

Location Map
Exhibit A - Services to be provided by Owner
Exhibit B - Services to be provided by Engineer
Exhibit C - Work Schedule
Exhibit D-1 - Estimated Man-hour Breakdown

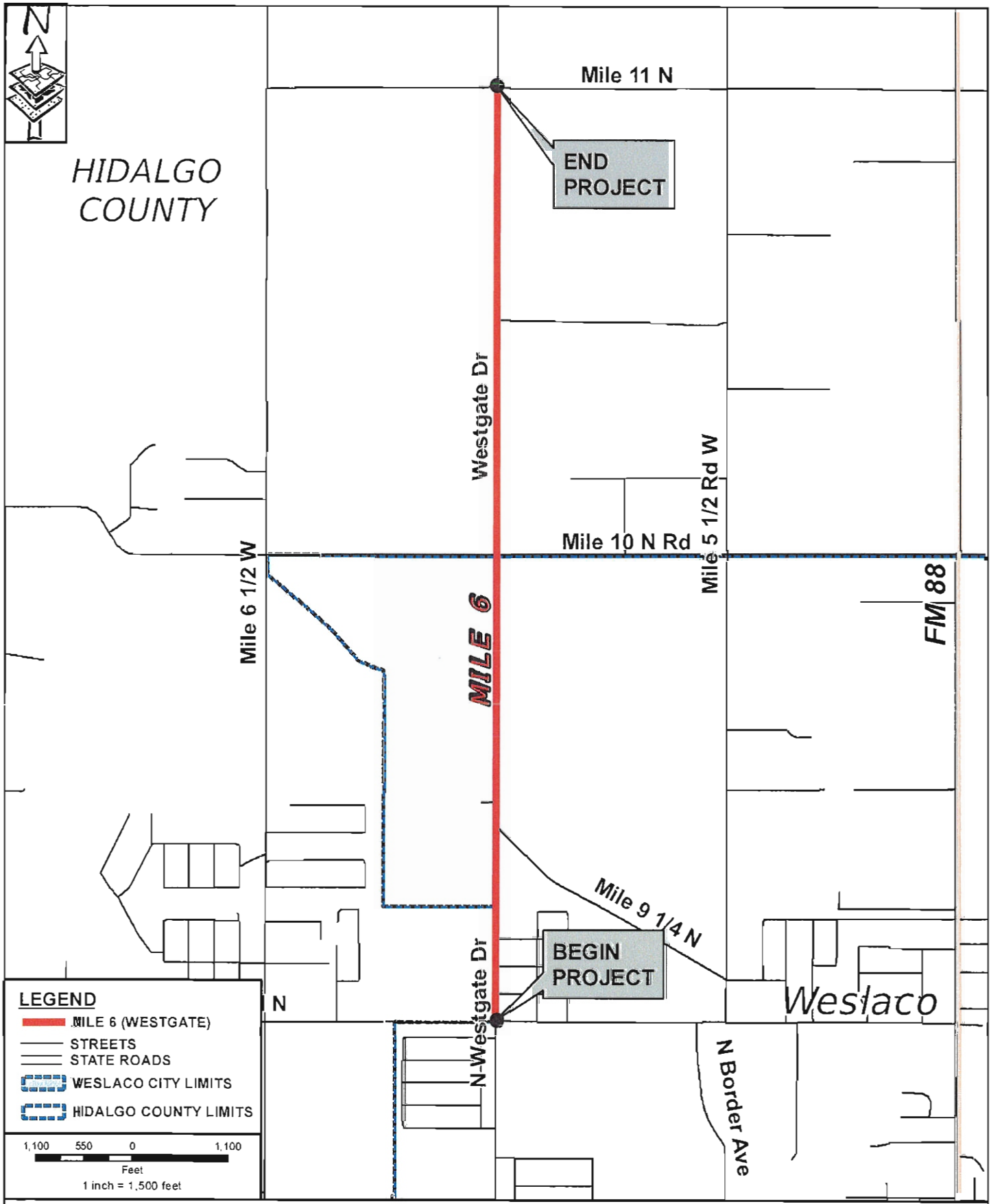

MILE 6 (WESTGATE) LOCATION MAP

FROM MILE 9 TO MILE 11

APPROX. TOTAL PROJECT LENGTH 2.0 MILES

EXHIBIT "A"

Services to be provided by the County

1. The County will issue work authorization to initiate all required services and designate the authorized representative of the coordination of each work authorization.

2. The County will provide copies of all subdivision plats of record and/or in the subdivision process.

3. The County will provide the Engineer with on-going guidance, timely reviews, and decisions necessary to complete services required by the work authorization in order to permit the Engineer to maintain an agreed upon project schedule.

4. The County will process all acceptable requests for payment in a timely manner.

EXHIBIT "B"
SCOPE OF SERVICES TO BE PROVIDED BY THE ENGINEER

SECTION 1-PROJECT DESCRIPTION

The services designated herein as "Services provided by the ENGINEER" shall include the performance of all engineering services for the following described facility:

COUNTY/CITY: HIDALGO COUNTY

CONTROL:

PROJECT/DESCRIPTION: ENVIRONMENTAL ASSESSMENT RE-EVALUATION, PS&E AND ROW ACQUISITION

LENGTH: 2.0 MILES

HIGHWAY: MILE 6

LIMITS: FROM MILE 9 TO MILE 11

PROJECT CLASSIFICATION

(Place an "X" in only one Project Classification)

- ___ Surface Treatment
- ___ Overlay
- ___ Rehabilitation Existing Road (Scarify & Reshape)
- ___ Convert Non-Freeway to Freeway
- ___ Widen Freeway
- _X_ Widen Non-Freeway
- ___ New Location Toll Freeway
- ___ New Location Non-Freeway
- ___ Interchange (New or Reconstruct)
- ___ Bridge Widening or Rehabilitation
- ___ Bridge Replacement
- ___ Upgrade to Standards - Freeway
- ___ Upgrade to Standards - Non-Freeway
- ___ Miscellaneous Studies (Use Function Code 110 for All Tasks)

ENGINEER shall mean L&G Engineering.

STATE shall mean Texas Department of Transportation.

LPA (Local Public Agency) shall mean the COUNTY OF HIDALGO.

EXHIBIT "B"
SCOPE OF SERVICES TO BE PROVIDED BY THE ENGINEER

SECTION 4 - ADDITIONAL SOCIAL, ECONOMIC AND ENVIRONMENTAL STUDIES AND PUBLIC INVOLVEMENT

(Function Code 120)

Services Provided By: ENGINEER	LPA	
		1. Environmental Reports All Environmental Reports shall be in accordance with 43 Texas Administrative Code (TAC) 2.40-2.51, Code of Federal Regulations, Title 23, Part 771 and Highway Design Operations and Procedures Manual, Part II-B.
		a. Environmental Assessments
N/A	N/A	(1) An Environmental Assessment shall be prepared, anticipating a Categorical Exclusion.
N/A	N/A	(2) An Environmental Assessment shall be prepared in accordance with 23 USC 327 and the 2014 TxDOT-FHWA Memorandum of Understanding, anticipating a Finding of No Significant Impact.
N/A	N/A	(3) An Environmental Assessment shall be prepared, anticipating the need for a Draft Environmental Impact Statement.
YES	NO	(4) A Consultation Reevaluation Memorandum and a Documented Reevaluation Checklist, shall be prepared in accordance with 23 CFR 771.129, anticipating approval.
		b. Environmental Impact Statement
N/A	N/A	(1) A Draft Environmental Impact Statement shall be prepared. After appropriate interagency and public reviews within time limits prescribed by the Code of Federal Regulations, Title 23, Part 771 and 43 Texas Administrative Code 2.40-2.51, a Final Environmental Impact Statement shall be prepared.
N/A	N/A	(2) A Section 4(f) Statement (Department of Transportation Act) shall be provided by the ENGINEER. The format and content of the statement is found in FHWA Technical Advisory T6640.8A.
		2. Public Involvement All public involvement procedures shall be in accordance with 43 Texas Administrative Code (TAC) 2.40-2.51, Code of Federal Regulations Title 23, Part 771 and Highway Design Operations and Procedures Manual, Part II-B.
N/A	N/A	a. A public involvement meeting(s) and public hearing shall be scheduled, coordinated and conducted.
N/A	N/A	b. Technical assistance for one public meeting and one public hearing, preparation of, and maintenance of contact lists, minutes of meeting(s), exhibit preparation, and other tasks outlined by the LPA, shall be provided.
YES	NO	c. A meeting with affected property owners shall be scheduled, coordinated & conducted.
N/A	N/A	d. A Notice of Availability (NOA) shall be published by the LPA upon approval of the environmental decision.
		3. Technical Reports All technical reports shall be prepared in accordance with TxDOT's environmental rules and guidelines.
YES	NO	a. Air Quality Analysis An air quality analysis shall be prepared in accordance with the STATE'S Air Quality Guidelines. The air quality analysis shall be provided as a Technical Report and a summary of the air quality results included in the administratively complete document for the project.
YES	NO	b. Biological Technical Report A biological form and technical report shall be prepared in accordance with the STATE'S Biological Guidelines. The report will include water resources, and threatened and endangered species.

EXHIBIT "B"
SCOPE OF SERVICES TO BE PROVIDED BY THE ENGINEER

Services Provided By: ENGINEER	LPA	
N/A	N/A	c. Cultural Resources Historical and archeological studies shall be completed in accordance with the STATE'S guidelines.
N/A	N/A	(1) Historic Structure Studies A records search, project coordination request, and reconnaissance survey shall be performed, and documentation prepared regarding identification efforts, National Register eligibility and potential impacts to historic properties in accordance with the state's historic structure requirements.
N/A	N/A	(2) Archeological Studies File searches, project coordination request, an archeological reconnaissance, and an archeological survey shall be conducted to determine if known archeological sites are present or have been designated State Archeological Landmarks; and to identify the need (if any) to perform additional archeological investigations.
N/A	N/A	d. Community Impact Analysis A community impact analysis shall be prepared in accordance with the STATE'S Community Impact Guidelines.
N/A	N/A	e. Hazardous Materials The consultant shall perform an Initial Site Assessment (ISA) for hazardous materials impact in accordance with the American Society for Testing and Materials (ASTM) 1528.93 (Transaction Screen Process) and a Hazardous Materials Technical Report, as needed.
N/A	N/A	f. Indirect and Cumulative Impacts Analysis An indirect and cumulative impacts analysis shall be prepared in accordance with the STATE's guidelines.
N/A	N/A	g. Noise Analysis A noise analysis shall be prepared, including predicted noise levels and the consideration and evaluation of noise mitigation, in accordance with the STATE'S Noise Guidelines. The noise analysis shall be provided as a Technical Report and a summary of the noise analysis results shall be included in the administratively complete document.
YES	NO	h. Water Resources A Water Resources technical report shall be prepared in accordance with the STATE's water guidelines.
N/A	N/A	4. Environmental Scoping The ENGINEER shall initiate the environmental scoping process and complete an environmental scoping document/risk assessment in coordination with TxDOT.
YES	NO	5. General Guidelines for Preparation of Environmental Documents
		a. All technical reports will be submitted electronically to TxDOT through their FTP site.
		~~b. The draft administratively complete document will be submitted to TxDOT electronically through their FTP site.~~
		~~c. The administratively complete document will be prepared in accordance with the content and format of FHWA Technical Advisory T6640.8A and the TxDOT Administrative Code 43 TAC §2.44.~~
		~~d. The administratively complete document will be submitted to TxDOT electronically through their FTP site.~~
		e. Upon completion and approval of the technical reports and checklists, the Engineer will provide one (1) hard copy to the Client. All copies to TxDOT will be digital. Exhibits in the environmental document shall be color copies and text shall be black and white.

EXHIBIT "B"
SCOPE OF SERVICES TO BE PROVIDED BY THE ENGINEER

SECTION 6 - ADDITIONAL FIELD SURVEYING AND PHOTOGRAMMETRY

(Function Code 150)

Services Provided By:
SURVEYOR LPA

DESIGN AND CONSTRUCTION SURVEYS:

PURPOSE:

The purpose of a "design survey" is to provide field information in support of transportation systems design.

The purpose of a "construction survey" is to provide field data in support of highway construction.

DEFINITIONS:

A "design survey" is defined as the combined performance of research, field work, analysis, computation, and documentation necessary to provide detailed topographic (3-dimensional) mapping of a project site. A design survey may include, but need not be limited to, cross-sections or data to create cross-sections and Digital Terrain Models (DTM), horizontal and vertical location of utilities and improvements, detailing of bridges and other structures, review of right-of-way maps, establishing control points, etc.

A "construction survey" is defined as the combined performance of reconnaissance, field work, analysis, computation, and documentation necessary to provide the horizontal and vertical position of specific ground points to be used by the construction contractor for determining lines and grades.

1. Design Surveying

YES N/A a. Primary Project Control – 3 to 5 miles spacing
Precision shall be 1 part in 20,000 or better, unless otherwise directed by the District Engineer.
(1) Establish horizontal control points
(2) Establish vertical control points

NOTE: ALL BEARING AND DISTANCE SHALL BE BASED ON THE STATE PLANE COORDINATE SYSTEM NAD 1983, SOUTH ZONE. ALL DISTANCES AND COORDINATES SHALL BE SURFACE AND MAY BE CONVERTED TO GRID BY MULTIPLYING BY A COMBINED SCALE FACTOR OF 0.999960

YES N/A b. Secondary Project Control – Surveyor shall recover and/or reset H&V Control Points as provided by the Engineer and create Survey Control Data Sheets for inclusion in the Construction Project Plans signed and sealed by an R.P.L.S.
(1) No traverse should exceed 25 angle points. Planimetrics shall be 20 ft Lt & Rt from the proposed ROW as per the schematic provided by the Engineer.
(2) The unadjusted angular error should not exceed 2 seconds per angle, plus 14 seconds.
(3) The unadjusted ratio of precision should be one part in 10,000 or better. (The ratio of precision is the total length of the traverse divided by the total error.)
(4) The unadjusted vertical error should not exceed 0.03 foot per mile of traverse.
(5) Project control base lines

N/A N/A (6) Photogrammetric ground control
(a) Establish horizontal control
(b) Establish vertical control points
(c) Place and maintain control point targets

EXHIBIT "B"
SCOPE OF SERVICES TO BE PROVIDED BY THE ENGINEER

Services Provided By: SURVEYOR	LPA	
YES	N/A	c. Other Design Surveying

(1) **The limit of the Design surveys shall be 500-ft before and after the limits of the project as identified by the Project Engineer on the schematic. Establish horizontal and vertical control.** Set H&V Control at 1000-ft intervals along the project proposed right-of-way. Provide x, y, z for each H&V Control. Provide an H&V Control along each outfall identified on the Hydrologic Map. The H&V Control shall be #5 I.R. 2-ft in depth set in concrete. **The surveyor shall provide an H&V Control Book (a Sample shall be provided by the Engineer to the Surveyor).** The Surveyor will provide a 3-pt reference sketch with ties to the BMs for inclusion the existing H&V Control Book. Establish benchmark circuit throughout the project with a tolerance of 0.03'/ft per mile error vertically.

(2) Complete topographic and cross section survey, data processing, and CADD mapping (2D & 3D) for the limits of the project.

(3) Locate all visible utilities, data processing and CADD mapping (2D & 3D) including irrigation lines. Follow sample provided by the Engineer.

(4) Field locate cross culverts, driveway culverts, inverts, irrigation lines, within the project limits, data processing and CADD mapping (2D & 3D).

(5) Right of Entry, Right of Way Research, and Appraisal District Records is the responsibility of the Surveyor.

(6) The Surveyor shall stake the proposed centerline on the existing fields as approved by Engineer before construction for the purpose of utility adjustments and project location.

(7) Profile and cross section intersecting streets for ties into project (500-ft. beyond the proposed ROW per schematic and 20-ft wider than the existing ROW of intersecting street). Reference missing voids as per CD provided by the Engineer.

(8) Cross section irrigation crossings for a distance of 20-ft beyond the proposed ROW at 100-ft intervals in a DTM file. Provide a complete description of irrigation appurtances as identified by the engineer sample layout "EXHIBIT E". The SURVEYOR will meet with the ENGINEER before he ties down any irrigation lines. Jointly the SURVEYOR and the ENGINEER will identify from records such as the Irrigation District Maps and the A&M Data of existing irrigation lines that will need to be tied down. The SURVEYOR will follow the sample given to him by the ENGINEER and tie the structures horizontally and vertically and include in the field books to be submitted.

(9) Tie Horizontally and Vertically the existing storm drain system that lies within the existing proposed ROW including the elevation of the outfall of said recovered existing storm drain systems.

(10) Tie to existing underground and overhead utilities (location, elevation and direction)

Horizontally – The surveyor shall call the 1-800 number for the utilities to be marked on the ground as well as any city water and sewer lines. He shall tie all visible utility crossings with name, address and Phone #'s of utility companies. The engineer will coordinate with the utility companies and jointly the Surveyor and the Engineer will identify which utilities were missed and need to be tied down.

Vertically – The engineer shall identify all utilities that are potential conflicts and that need to be tied vertically. The engineer will advise the surveyor in writing of the needed vertical ties and the surveyor will tie the lines vertically once the surveyor has coordinated the exposure and provide the information to the engineer.

EXHIBIT "B"
SCOPE OF SERVICES TO BE PROVIDED BY THE ENGINEER

Services Provided By: SURVEYOR	LPA	
YES	N/A	(11) Cross section and profile all outfall channels identified on the Hydrologic Map for a distance of 200-ft beyond the proposed ROW upstream and downstream at 100-ft intervals. The SURVEYOR will provide a complete 2D/3D File including utilities of the outfalls identified.
		(12) Driveways and Turnouts (a) Inventory commercial entrances, public roads and side streets separately. (b) Obtain centerline station. (Width at ROW, PAV'T and existing radius. (c) Inventory by type (dirt, caliche, gravel or paved). If paved, indicate condition in terms of no patches, has patches or has potholes. (d) Obtain width at R.O.W. line. (e) Obtain elevations at both edges of the driveway or turnout in line with the side drain.
YES	N/A	(13) ROW staking (Existing and Proposed @ 1,000 ft. stations PC's PT's and Angle points as per ROW Map)
YES	N/A	(14) Soil core hole staking at bridge class structures.
YES	N/A	(15) Determine changes in topography from voids and outdated maps due to development, erosion, etc.
YES	N/A	(16) Profiles of existing drainage facilities.
YES	N/A	(17) Measurement of hydraulic opening under existing bridges.
YES	N/A	(18) Obtain elevations of manholes and valves of utilities
YES	N/A	(19) Provide temporary signs, traffic control, flags, safety equipment, etc.
YES	N/A	(20) Ties to existing bridges railroad rail elevations or culverts that may conflict with new construction.
YES	N/A	(21) Bridge widening top of deck and/or top of cap elevations at the Profile Grade Line (PGL) and the edges of slab at bent locations.
YES	N/A	(22) Inventory signs, mailboxes, and driveways
YES	N/A	(23) Locate wetlands.
YES	N/A	(24) Locate existing right-of-ways.
		d. Construction Surveys: In performing construction surveys, the following will be requested by the ENGINEER on an as needed basis, but need not be limited to:
N/A	N/A	(1) Stake existing and/or proposed right-of-ways.
N/A	N/A	(2) Stake existing and/or proposed baseline/centerline.
N/A	N/A	(3) Stake proposed bridge structures.
N/A	N/A	(4) Stake proposed drainage structures, such as manholes, culverts, etc.
N/A	N/A	(5) Set grade stakes.
N/A	N/A	(6) Recover and check existing control points.
N/A	N/A	(7) Establish additional control points.
N/A	N/A	(8) Check elevations and locations of structures.
N/A	N/A	(9) Determine and resolve conflicts associated with survey data.

EXHIBIT "B"
SCOPE OF SERVICES TO BE PROVIDED BY THE ENGINEER

Services Provided By: SURVEYOR	LPA	
N/A	N/A	**2. Photogrammetric Products** a. Uncontrolled Photography (1) Contact Prints (2) Mosaics (3) Digital ortho plots b. Mapping (1) Planimetric Maps (2) Contour Maps (3) Cross Sections (4) Profiles (5) Digital Terrain Models (DTM)
		3. UTILITY SUBSURFACE INVESTIGATION: Utility Quality Levels are in cumulative order (least to greatest) as follows
YES	N/A	3.1. Quality Level C - Existing Records: Utilities are plotted from review of available existing records that will be generated by the Engineer on the schematic and provided to the surveyor for his further creation of a Utility Map which will be turned in as a deliverable as part of this work order.
YES	N/A	3.2. Quality Level B - Surface Visible Feature Survey: The Surveyor shall gather the field tied Utility Information and compare it to the existing records (if any) as provided by the Engineer and correlate with surveyed surface-visible features. The surveyor shall create a Utility Layout Map or plan layout 2D, showing the limits of the proposed project and limits of the work area required for this work authorization; including highway stations, limits within existing or proposed right of way. Correlate utility owner records with designating data and resolve discrepancies using professional judgment. A color-coded composite utility facility plan with utility owner names, quality levels, line sizes and subsurface utility locate (test hole) locations. The Layout Map will include all utilities that have been field tied – 2D Horizontal Utilities. This Layout will be provided to the Engineer and a meeting held with Engineer to identify which utilities will need to be tied down vertically. A note must be placed on the designate deliverable only that states "lines sizes are from best available records". All above ground appurtenance locations must be included in the deliverable to the Engineer. This information will be provided in the latest version of Micro Station or Geopak used by the State. The electronic file will be delivered on C.D. or DVD. A hard copy is required and must be signed, sealed, and dated by the Surveyor. Note: Determine and inform the Engineer of the approximate utility depths at critical locations. This depth indication is understood by the Engineer to be approximate only and is not intended to be used for preparing the construction plans.
YES	N/A	3.3. Subsurface Utility Locate (Test Hole) Service (Quality Level A), **THE SURVEYOR SHALL ESTIMATE LOCATING VERICALLY 25 UTILITES PER MILE OR AS IDENTIFIED BY THE ENGINEER.** Locate shall mean to obtain precise horizontal and vertical position, material type, condition, size and other data that may be obtainable about the utility facility and its surrounding environment through exposure by non-destructive excavation techniques that ensures the integrity of the utility facility. Subsurface Utility Locate (Test Hole) Services (Quality Level A) are inclusive of Quality Levels B and C. The Surveyor shall: 3.3.1 Review the requested test hole locations that have been identified by the Engineer and Coordinate with utility owner inspectors as may be required by law or utility owner policy.

Services Provided By:
SURVEYOR LPA

3. *Utility Subsurface (continued)*

3.3.2 Measure and record the following data on an appropriately formatted test hole data sheet that has been sealed and dated by the Engineer:

- Elevation of top and/or bottom of utility tied to the datum of the furnished plan.
- Identify a minimum of two benchmarks utilized. Elevations shall be within an accuracy of 15mm (.591 inches) of utilized benchmarks.
- Elevation of existing grade over utility at test hole location.
- Horizontal location referenced to project coordinate datum.
- Outside diameter of pipe or width of duct banks and configuration of non-encased multi-conduit systems.
- Utility facility material(s).
- Utility facility condition.
- Coating/Wrapping information and condition.
- Unusual circumstances or field conditions.

3.3.3 Excavate test holes in such a manner as to prevent any damage to wrappings, coatings, cathodic protection or other protective coverings and features. Water excavation can only be utilized with written approval from the appropriate State District Office.

3.3.4 Back fill all excavations with appropriate material, compact backfill by mechanical means, and restore pavement and surface material. The Engineer shall be responsible for the integrity of the backfill and surface restoration for a period of three years. Install a marker ribbon throughout the backfill.

3.3.5 Provide complete restoration of work site and landscape to equal or better condition than before excavation.

3.3.6 Plot utility location position information on the Utility Layout sheet and identify the vertical elevation and sealed by the responsible Surveyor. This information will be provided in the latest version of Micro Station or Geopak format used by the State. The electronic file will be delivered on C.D or DVD.

4. DELIVERABLES:

The deliverables to be specified in individual work authorizations for design surveys and construction surveys may be any combination of the following:

YES N/A 4.1. Digital Terrain Models (DTM) in a format acceptable by the ENGINEER.

YES N/A 4.2. Final H&V Field Book Binder with all pertinent information obtained in the field for Design Surveys. Maps, plans, or sketches prepared by the SURVEYOR showing the results of field surveys.

YES N/A 4.3. Computer printouts or other tabulations summarizing the results of field surveys.

YES N/A 4.4. Digital files or media acceptable by the ENGINEER containing field survey data.

YES N/A 4.5. Maps, plats, plans, sketches, or other documents acquired from utility companies, private corporations, or other public agencies, the contents of which are relevant to the survey.

YES N/A 4.6. Field survey notes, as electronic and/or hard copies.

YES N/A 4.7. A H&V Control Book identifying the basis of the Primary and Secondary Control and an 8 ½ inch by 11 inch survey control data sheet for each construction control point which shall include, but need not be limited to, a location sketch, a physical description of the point including a minimum of two reference ties, surface coordinates, a surface adjustment factor, elevation, and the horizontal and vertical datums used. Survey control data sheets shall be signed and sealed by the supervising Registered Professional Land Surveyor.

Services Provided By: SURVEYOR	LPA	
		4. *Deliverables (continued)*
YES	N/A	4.8. Final mylar set of 11 inch by 17 inch Survey Control data sheets sign and seal by the RPLS per TxDOT guidelines.
YES	N/A	4.9. A digital and/or hard copy of all computer printouts of horizontal and vertical conventional traverses, GPS analysis and results, data including property descriptions with field notes and plats, right-of-way maps, and survey control data sheets to include in the H&V Field Book Binder.
YES	N/A	4.10. Survey reports in a format requested by the ENGINEER.
YES	N/A	4.11. Items indicated under the Automation Requirements Section 6.

5. GENERAL REQUIREMENTS:

5.1. Design surveys and construction surveys shall be performed under the supervision of a Registered Professional Land Surveyor currently registered with the Texas Board of Professional Land Surveying.

5.2. Horizontal ground control used for design surveys and construction surveys, furnished to the SURVEYOR by the ENGINEER or based on acceptable methods conducted by the SURVEYOR, shall meet the standards of accuracy required by the STATE.

5.3. Reference may be made to standards of accuracy for horizontal control traverses, as described in the FGCS Standards and Specifications for Geodetic Control Networks, latest edition, the TxDOT Survey Manual, latest edition, the TxDOT GPS Manual of Practice, latest edition, or the TSPS Manual of Practice for Land Surveying in the State of Texas, as may be applicable.

5.4. Vertical ground control used for design surveys and construction surveys, furnished to the SURVEYOR by the ENGINEER or based on acceptable methods conducted by the SURVEYOR, shall meet the standards of accuracy required by the ENGINEER.

5.5. Reference may be made to standards of accuracy for vertical control traverses, as described in the FGCS Standards and Specifications for Geodetic Control Networks, latest edition, the TxDOT Survey Manual, latest edition, the TxDOT GPS Manual of Practice, latest edition, or the TSPS Manual of Practice for Land Surveying in the State of Texas, as may be applicable.

5.6. Side shots or short traverse procedures used to determine horizontal and vertical locations shall meet the following criteria:

- Side shots or short traverses shall begin and end on horizontal and vertical ground control as described above.
- Standards, procedures, and equipment used shall be such that horizontal locations relative to the control may be reported within the following limits:
- Bridges and other roadway structures: less than 0.1 of one foot.
- Utilities and improvements: less than 0.2 of one foot.
- Cross-sections and profiles: less than 1 foot.
- Bore holes: less than 3 feet.
- Standards, procedures, and equipment used shall be such that vertical locations relative to the control may be reported within the following limits:
- Bridges and other roadway structures: less than 0.02 of one foot.
- Utilities and improvements: less than 0.1 of one foot.
- Cross-sections and profiles: less than 0.2 of one foot.
- Bore holes: less than 0.5 of one foot.

Services
Provided By:
SURVEYOR LPA

5. **AUTOMATION REQUIREMENTS:**

6.1 Planimetric design files (DGN) shall be fully compatible with the State's *Micro Station V8* graphics program without further modification or conversion.

6.2 Electronically collected and processed field survey data files shall be fully compatible with the State's *CADD* systems without further modification or conversion. All files shall incorporate only those feature codes currently being used by the STATE.

6.3 Digital Terrain Models (DTM) shall be fully compatible with the STATE's GEOPAK system without further modification or conversion. All DTM files shall be fully edited and rectified to provide a complete digital terrain model with all necessary break lines.

EXHIBIT "B"
SCOPE OF SERVICES TO BE PROVIDED BY THE ENGINEER

ADDITIONAL RESPONSIBILITIES

A. TRAFFIC CONTROL:

The SURVEYOR shall control traffic in and near surveying operations adequately to comply with provisions of the latest edition of the TxDOT Manual on Uniform Traffic Control Devices – Part VI and the latest edition of the Occupational Safety Manual both of which can be found on the TxDOT internet site.

In the event field crew personnel must divert traffic or close traveled lanes, a Traffic Control Plan based upon principles outlined in the latest edition of the TxDOT Manual on Uniform Traffic Control Devices – Part VI shall be prepared by the SURVEYOR and approved by the ENGINEER prior to commencement of field work. A copy of the approved plan shall be in the possession of field crew personnel on the job site at all times and shall be made available to the ENGINEER for inspection upon request.

B. INVOICING:

Payment requests shall include a SURVEYOR's invoice. With each payment request, the SURVEYOR shall submit a project status report which will, as a minimum, include the percentage of total work complete as of the date of the payment request and a description of current work activity. The percentage of total work complete shall not be based simply on the percentage of funds expended, but shall be based on the best judgment of the SURVEYOR as to the percentage of actual work complete.

C. EASEMENTS, LETTERS OF PERMISSION, ETC.

The SURVEYOR shall be responsible for delineating easements. The SURVEYOR will be responsible for securing the necessary legal instruments and obtaining all Right-of-Entries (ROEs).

D. MEETINGS:

The ENGINEER shall setup the necessary meetings with the SURVEYOR in order to assure all field information is provided on-time and products are delivered in accordance with TxDOT's specifications. SURVEYOR must attend all meetings involving data provided if requested by ENGINEER.

E. PROJECT MANAGER/SURVEYOR COMMUNICATION:

The SURVEYOR shall designate one Texas Registered Professional Land Surveyor (RPLS) to be responsible throughout the project for project surveying coordination and all communications, including billing, with the ENGINEER.

F. OFFICE LOCATION:

The SURVEYOR will perform the services to be provided under this agreement out of a local office and have a crew available to perform requested tasks within 24 hours of request. The coordinating SURVEYOR's Project Manager (RPLS) shall be accessible at all times and working from the local office.

EXHIBIT "B"
SCOPE OF SERVICES TO BE PROVIDED BY THE ENGINEER

SECTION 7 - ADDITIONAL ROADWAY DESIGN CONTROLS

(Function Code 160)

Services Provided By: ENGINEER	LPA	
		1. Geometric Design
YES	N/A	a. Horizontal and Vertical Alignment ~~(Preliminary based on office surveys)~~
YES	N/A	b. Schematic Layout
		(1) The location of interchanges, main lanes, grade separations, frontage roads and ramps.
		(2) Develop vertical and horizontal alignment of main lanes, ramps and cross roads at proposed interchanges or grade separations. Frontage road alignment data need not be shown on the schematic; however, it should be developed in sufficient detail to determine ROW needs. The degree of horizontal curves and vertical curve data, including "K" values, shall also be shown for ease of checking.
		(3) For freeways, show the location and text of the proposed main lane guide signs. Lane lines and/or arrows indicating the number of lanes shall also be shown.
		(4) A complete explanation of the sequence and methods of stage construction, if proposed, including the initial and ultimate proposed treatment of crossovers and ramps.
		(5) The tentative ROW limits.
		(a) Provide a roadway Design System (RDS) or (GEOPAK) computer tape of the preliminary earthwork to verify ROW requirements.
		(b) Provide a graphics file containing the approved schematic.
		(6) The geometric (pavement cross slopes, lane and shoulder widths, slope rates for fills and cuts) of the typical sections of proposed highway main lanes, ramps, frontage roads, and cross roads.
		(7) The current and projected traffic volumes as provided by the TxDOT (20 year traffic projection, unless otherwise determined by the District Engineer).
		(8) The control of access lines if Interstate or designated under House Bill 179.
		(9) Direction of traffic flow on all roadways.
		(10) Location and width of median openings for highway without access control.
		(11) The geometric of speed change (acceleration, deceleration, climbing) lanes.
YES	N/A	2. General Guidelines for Project Development
		a. Prior to preparing detailed plans for a proposed project, a preliminary schematic layout shall be prepared which indicates the general geometric features and location requirements peculiar to the project. An uncontrolled aerial mosaic will be provided for this use. Four copies of the schematic layout shall be submitted through the district to the Design Division for approval and subsequent coordination with the Federal Highway Administration (FHWA) where applicable. The layout shall be submitted for two-lane arterial highway projects on new locations and for all multi-lane highway projects. **No geometric design is to be performed until the COUNTY has given the engineer written approval of the preliminary schematic layout.**
		b. All geometric design shall be in conformance with the State's Design Division, Operations and Procedures Manual, except where variances are permitted in writing by the STATE.
		c. The schematic layout shall include basic information which is necessary for the proper review and evaluation including the items listed above in the checklist for schematic layout.
		d. Handling of traffic during construction shall be a consideration in the development of preliminary designs.

EXHIBIT "B"
SCOPE OF SERVICES TO BE PROVIDED BY THE ENGINEER

Services Provided By: ENGINEER	LPA	
YES	N/A	2. General Guidelines for Project Development *(continued)*
		e. Upon approval of the schematic layout by Design Division (FHWA on Federal-aid projects), it shall be the basis for an exhibit at any required public hearing prior to final development of the project. If there are any changes to the schematic after the Design Division and FHWA approval and before the public hearing, four copies of the revised schematic, as displayed at the hearing, shall be submitted either prior to or accompanying the public hearing data. If there are no changes in the schematic as displayed at the hearing, only photographs of the schematic and other displays shall be submitted with the public hearing data.
		f. For all freeway construction projects, these schematics shall show the location and text of the proposed main lane guide signs. A schematic layout shall be submitted through the district to the Traffic Operations Division, Traffic Safety Section for approval and subsequent coordination with the FHWA. All signing shall be in conformance with the Texas MUTCD.
		g. On complex projects, informal contact through the district with the Design Division and FHWA personnel is encouraged with regard to development of preliminary design prior to official schematic submission.
		h. The engineer shall furnish a project tape that is compatible with the STATE's computer system, a project listing, and a cross section plot showing the original design sections containing the earthwork input and original cross sections for the project. **Accuracy of the earthwork design is of utmost importance since it is the basis for contractor payments and construction staking.**
N/A	N/A	3. Exhibit for Airway/Highway Clearance Permits
		4. Grading Design
YES	N/A	a. Refine the horizontal and vertical alignment of main lanes, frontage roads, ramps, cross roads and direct connectors based upon the approved schematic layout. Determine vertical clearances at grade separations and overpasses, taking into account the appropriate super elevation rate.
YES	N/A	b. Typical Sections
YES	N/A	c. Design Cross Sections
YES	N/A	d. Determine Cut and Fill Quantities
N/A	N/A	e. Slope Stability Analysis
N/A	N/A	f. Embankment Foundation Stability Analysis
N/A	N/A	g. Embankment Settlement Analysis
		5. Pavement Design
YES	N/A	a. Prior to initiating detailed plan preparations for a project, a preliminary investigation shall be made to determine the approximate section and pavement type to be used for the pavement structure. The Flexible Pavement Design Manual for flexible pavement, "Appendix F" of the Design Division, Operations and Procedures Manual, and the current AASHTO Guide for the Design of Pavement Structures, may be used for this purpose.
YES	N/A	b. The typical section shall also reflect proposed geometric including pavement cross slopes, lane and shoulder widths, and slope rates whenever this data have not been previously shown on a schematic submission.
		c. Embankment and Subgrade
		(1) Soil Core Holes (Show cost estimate with Function Code 110)
N/A	N/A	(a) Along center line
N/A	N/A	(b) Along center line of each roadway
		The location and minimum number of soil core holes required for this project are as follows: (To be determined when schematic is being completed)

EXHIBIT "B"
SCOPE OF SERVICES TO BE PROVIDED BY THE ENGINEER

Services Provided By: ENGINEER	LPA	
		5. Pavement Design *(continued)*
		c. Embankment and Subgrade *(continued)*
YES	N/A	(2) Identify,interpret and summarize geologic features that affect engineering design (PI, Sulfate content, % of lime)
YES	N/A	d. Traffic Data for Pavement Design by STATE
YES	N/A	e. Basic Design Criteria
YES	N/A	f. Life Cycle Cost Analysis(es)
YES	N/A	g. Cost Data
YES	N/A	h. Pavement Material Properties
YES	N/A	i. Rehabilitation Investigations
YES	N/A	(1) Core Hole Survey (Show cost estimate with Function Code 110)
		(a) Determine type and depth of existing material, pavement, etc. The Engineer will determine whether to salvage ACP and FLEXBASE as well as their properties and provide this information to TxDOT.

EXHIBIT "B"
SCOPE OF SERVICES TO BE PROVIDED BY THE ENGINEER

SECTION 8 - ADDITIONAL DRAINAGE

(Function Code 161)

Services Provided By: ENGINEER	LPA	
		All hydraulic design shall be in accordance with the TxDOT's Hydraulic Manual, except where variances are permitted in writing by the LPA.
		1. Hydrologic Studies, Discharges
YES	NO	a. Hydrologic map showing drainage areas, contours and drainage Q's.
YES	N/A	b. Drainage area maps showing existing conditions and proposed improvements.
YES	N/A	c. Hydrologic data/discharge determination
		2. Hydraulic Drainage Study and Documentation
		a. Hydraulic computations
NO	N/A	(1) Storm water detention available within the ROW (linear ft. along side drain ditch).
NO	N/A	(2) Storm water detention required outside the ROW (as per HCDD#1)
YES	N/A	(3) Culverts
NO	N/A	(4) Bridge waterways
YES	N/A	(5) Channels
YES	N/A	(6) Storm sewers/inlets
NO	N/A	(7) Pump stations
NO	N/A	(8) Storm Water Management facilities
YES	N/A	(9) Other
		(a) Irrigation Canals/Siphons
NO	N/A	b. Hydraulic report(s)
NO	N/A	c. Federal Emergency Management Agency (FEMA) floodway requirements
YES	N/A	d. Determine impact of proposed drainage plan on the following receiving stream(s)
		(1) Hidalgo County Drainage District Outfalls
		(2) All Irrigation District Outfalls impacted
		3. Layout, Structural Design and Detailing of Drainage Features
		a. Culverts
YES	N/A	(1) New culverts
YES	N/A	(2) Culvert widening and/or lengthening
YES	N/A	(3) Culvert replacements
		b. Storm sewers
YES	N/A	(1) New storm sewers
YES	N/A	(2) Modify existing storm sewers
YES	N/A	(3) Inlets
YES	N/A	(4) Manholes
YES	N/A	(5) Trunk lines
NO	N/A	c. Pump stations
NO	N/A	d. Subsurface drainage at retaining walls
YES	N/A	e. Outfall channel(s) within the ROW
YES	N/A	f. Outfall channel(s) outside the ROW
NO	N/A	g. Detention Pond(s) within the ROW
NO	N/A	h. Detention Pond(s) outside the ROW
YES	N/A	i. Summary of Quantities
YES	N/A	j. Storm Water Management facilities
YES	N/A	4. Storm Water Pollution Prevention Plan (SW3P)
NO	N/A	5. Scour Evaluation - Waterway Structures only (to be completed by Bridge Engineer under FC 170.

EXHIBIT "B"
SCOPE OF SERVICES TO BE PROVIDED BY THE ENGINEER

SECTION 9 - ADDITIONAL SIGNING, MARKINGS AND SIGNALIZATION

(Function Code 162)

Services Provided By: ENGINEER	LPA	
YES	N/A	1. Signing and Markings Layout a. Requirements (Separate Layout) (1) Roadway layout (2) Center line with station numbering (3) ROW lines (4) Culverts and other structures that present a hazard to traffic (5) Location of utilities, if not shown on plan and profile (6) Existing signs to remain, to be removed, to be relocated (7) Proposed signs (illustrated and numbered) (8) Existing overhead sign bridges to remain, to be revised, removed or relocated (9) Proposed overhead sign bridges indicating location by plan layout (electrical details need not be shown on this layout) (10) Proposed markings (illustrated and quantified) which include pavement markings, object markings and delineation (12) Quantities of existing pavement markings to be removed (13) Proposed delineators and object markers b. For projects involving freeway to freeway or other types of directional interchanges, projects including left-hand ramps or connections, the following information must be provided: (1) The location of interchanges, main lanes, grade separations, frontage roads and ramps (2) complete explanation of the sequence and methods of stage construction, where applicable, which would include the initial and ultimate proposed treatment of crossovers and ramps (3) The number of lanes in each section of proposed highway and the location of changes in numbers of lanes (4) The projected traffic volumes as provided by the STATE (20 year traffic projection, unless otherwise determined by the District Engineer) (5) Tentative ROW limits (6) Direction of traffic flow on all roadways (7) Main lane, ramp, frontage road, and necessary cross road profiles at proposed interchanges or grade separations
YES	N/A	2. Summary of Small Signs Tabulation
NO	N/A	3. Summary of Large Signs Tabulation including all Guide Signs
YES	N/A	4. Sign Detail Sheets a. All signs except route markers b. Design details for large guide signs c. Dimensions of letters, shields, borders, corner radii etc. d. Designation of shields attached to guide signs e. Designation of arrow used on exit direction signs

EXHIBIT "B"
SCOPE OF SERVICES TO BE PROVIDED BY THE ENGINEER

Services Provided By: ENGINEER	LPA	
		5. Traffic Signals
		a. Development of Justification (Warrant) Data
NO	N/A	(1) Location Map Relationship of proposed installation to other traffic signals, highways, business areas and traffic generators
NO	N/A	(2) Photographs as appropriate
NO	N/A	(3) Accident data as appropriate
		(4) Vehicle volumes (provided by TxDOT)
N/A	N/A	(a) Existing
N/A	N/A	(b) Estimated
N/A	N/A	(c) Projected
N/A	N/A	(d) Pedestrian
N/A	N/A	(5) Traffic Survey - Count Analysis
N/A	N/A	(6) Recommendation based on above data
YES	N/A	b. Layout
		(1) Title Sheet (when applicable)
		(a) Describe the location
		(b) Type of installation
		(c) Area map with project limits for each location
		(d) Index of sheets
		(e) Space for official signatures
		(2) Estimate and quantity sheet (when applicable)
		(a) List of all bid items
		(b) Bid item quantities
		(c) Specification item number
		(d) Paid item description and unit of measure
		(3) Basis of estimate sheet (list of materials)
		(4) General notes and specification data sheet
		(5) Condition diagram
		(a) Highway and intersection design features
		(b) Roadside development
		(c) Traffic control including illumination
		(6) Plan sheet(s)
		(a) Existing traffic control that will remain (signs and markings)
		(b) Existing utilities
		(c) Proposed highway improvements
		(d) Proposed installation
		(e) Proposed additional traffic controls
		(f) When applicable, proposed conduit for Railroad interconnect with standard details for runs under tracks.
		(g) Proposed illumination attached to signal poles.
		(7) Notes for plan layout
		(8) Elevation sheet(s) (span wire design)
		(9) Phase sequence diagram(s)
		(a) Signal locations
		(b) Signal indications
		(c) Phase diagram
		(d) Signal sequence table
		(e) Flashing operation (normal and emergency)
		(f) Preemption operation (when applicable)
		(g) Interval timing, cycle length and offset

EXHIBIT "B"
SCOPE OF SERVICES TO BE PROVIDED BY THE ENGINEER

Services Provided By: ENGINEER	LPA	
		5. Traffic Signals *(continued)*
YES	N/A	b. Layout *(continued)*
		(10) Construction detail sheets(s)
		(a) Poles (TxDOT standard sheets)
		(b) Detectors
		(c) Pull Box and conduit layout
		(d) Controller Foundation standard sheet
		(11) Marking details (when applicable)
		(12) Barricade and warning sign standard sheet and any special details for work zone traffic control for special conditions
		(13) Aerial or underground interconnect details (when applicable)
		c. General Requirements
		(1) Contact local utility company
YES	N/A	(a) Confirm power source
YES	N/A	(b) Discuss route of aerial or underground interconnect cable (when applicable)
YES	N/A	(c) Adjustment of overhead utility lines
YES	N/A	(2) Prepare governing specifications and special provisions list
YES	N/A	(3) Prepare project estimate
YES	N/A	d. Summary of Quantities

EXHIBIT "B"
SCOPE OF SERVICES TO BE PROVIDED BY THE ENGINEER

SECTION 10 - ADDITIONAL MISCELLANEOUS (ROADWAY)

(Function Code 163)

Services Provided By: ENGINEER	LPA	
		1. Retaining Walls
		a. Structural Details
N/A	N/A	(1) Cast-in-Place Cantilever at _____ locations. (TxDOT Standard Retaining Wall)*
N/A	N/A	(2) Tiedback Retaining Wall at _____ location. (TxDOT standard retaining wall)
N/A	N/A	(3) Specialized Retaining Wall at _____ locations (Unique Design).*
		b. Alternate Patented Retaining Walls at all locations. (Layouts Only)**
N/A	N/A	(1) Mechanically Stabilized Earth
N/A	N/A	(2) Concrete Block Wall Systems
N/A	N/A	c. Retaining Wall Layout (PLAN)
		(1) Designation of reference line
		(2) Beginning and ending retaining wall stations
		(3) Station of each retaining wall joint***
		(4) Offset from reference line
		(5) Horizontal curve data
		(6) Number of retaining wall panels and lengths***
		(7) Total length of wall
		(8) Indicate face of wall
		(9) All wall dimensions and alignment relations (alignment data as necessary)
		(10) Soil core hole locations
N/A	N/A	d. Retaining Wall Layout (ELEVATION)
		(1) Top of wall elevations at each joint or intervals***
		(2) Existing and finished ground line elevations
		(3) Height of stem at each joint***
		(4) Wall panel designations***
		(5) Top of footing elevations***
		(6) Limits of measurement for payment****
		(7) Type, limits and anchorage details of railing (If applicable)
		(8) Top and bottom of wall profiles and soil core hole data plotted at correct station and elevation. The plot shall be at the same scale as the wall profile. Ground water elevations and the observation date shall be shown.
N/A	N/A	e. Foundation Studies (Show cost estimate with Function Code 110)
N/A	N/A	(1) The soil core holes shall be obtained at approximately 200 foot intervals along retaining wall alignments. The core holes shall extend 25 feet below the footing elevation.
N/A	N/A	f. Stability Analysis (the ENGINEER shall estimate this task as part of his bid to complete the work).
N/A	N/A	g. Estimate
N/A	N/A	h. Summary of Quantities
N/A	N/A	i. Typical X-section.
N/A	N/A	j. General Guidelines for Retaining Walls
		(1) The ENGINEER shall make final design calculations and final detail drawings in accordance with standard requirements of the Texas Department of Transportation. **The designer and checker shall check all calculations and initial each page.**
		(2) The ground water level should be observed at the water strike.
		(3) For purposes of uniformity statewide, soil core hole data shall be shown on layouts as illustrated in the Bridges and Structures Foundation Exploration and Design Manual.
		(4) Foundation exploration shall conform to the requirements set forth in Administrative Circular No. 25-84, Administrative Circular 33-87 and Administrative Circular No. 25-92.

EXHIBIT "B"
SCOPE OF SERVICES TO BE PROVIDED BY THE ENGINEER

Services Provided By: ENGINEER	LPA	
YES	N/A	2. Traffic Control Plan, Detours and Sequence of Construction Traffic Control Plans (TCP) are required for all projects. A detailed TCP shall be developed when traffic handling during construction involves complications for which a feasible solution is not covered by the Texas MUTCD or the current Barricade and Construction (BC) Standards. The following items are required on all Traffic Control Plan Layouts: a. The sequence of construction and method of handling traffic during each phase. b. The existing and proposed traffic control devices that will be used to handle traffic during each construction sequence. Include signals, regulatory signs, warning signs, construction warning signs, guide signs, route markers, construction pavement markings, channelizing devices, portable changeable message signs, flashing arrow boards, barricades, barriers, etc. c. The proposed traffic control devices (stop signs, signals, flag person, etc.) at grade intersections during each construction sequence. d. Where detours are provided, typical cross sections shall be shown. e. Road construction work hours shall be developed after an investigation of the traffic volumes has been performed.
		3. Illumination
N/A	N/A	a. Preliminary Roadway Illumination Layout and Circuit Layout (1) For projects involving freeway to freeway or other types of directional interchanges and projects including left-hand ramps or connections, provide the following: (a) The location of interchanges, main lanes, grade separations, frontage roads and ramps (b) A complete explanation of the sequence and methods of stage construction, where applicable, which would include the initial and ultimate proposed treatment of crossovers and ramps (c) The number of lanes in each section of proposed highway and the location of changes in the number of lanes (d) The projected traffic volumes as provided by the STATE (20 year traffic projection unless otherwise determined by the district engineer) (e) Tentative ROW limits (f) Direction of traffic flow on all roadways (g) Main lane, ramp, frontage road, and necessary cross road profiles at proposed interchanges or grade separations
N/A	N/A	b. Final Roadway Illumination and Electrical Circuit Layouts (1) Roadway layout showing pavement edges, shoulders, curbs, retaining walls, etc. (2) Center line with station numbering. (3) ROW lines. (4) Symbol legend. Use department standard symbols for lighting and electrical. (5) Culverts and other structures that present a hazard to traffic. (6) Location of underground utilities, if not shown on plan profile. (7) Location of overhead electrical lines, both crossing and parallel to ROW. (8) Existing sign lighting circuits and roadway illumination to remain, to be removed, to be relocated. (9) Existing service poles, electrical circuits, ground boxes, etc. (10) Contact electric utility for service pole locations, voltage characteristics. (11) Location of proposed sign lighting circuits and roadway illumination. (12) Proposed electrical circuits. (13) Tabulation of all quantities including proposed, existing to be relocated, existing to be removed. The layout sheet quantities and lighting summary shall be shown. Tabulations to include estimated quantity with a column for final quantities.

EXHIBIT "B"
SCOPE OF SERVICES TO BE PROVIDED BY THE ENGINEER

Services Provided By: ENGINEER	LPA	
		3. Illumination *(continued)*
N/A	N/A	c. General Guidelines for Illumination (If applicable) The ENGINEER shall submit to the LPA, well in advance of PS&E due date, the roadway illumination and electrical circuit layout sheets for review by the STATE. Two copies of the layout sheets are to be submitted. One copy will be returned to the Engineer showing corrections that are to be made by the ENGINEER. When final plan submission is made, the ENGINEER shall provide a written statement regarding completion of the corrections.
		4. Miscellaneous Drafting/Standards
YES	N/A	a. Erosion Control
N/A	N/A	b. Landscape Development
YES	N/A	5. Compute and Tabulate Quantities
YES	N/A	6. Special Utility Details (Irrigation lines)
		7. Miscellaneous Structures
		a. Type of Structure*
		(1) Overhead Sign Bridges (O.S.B.) Modifications or special O.S.B. designs shall be prepared using the same design assumptions that are used for the standard O.S.B structures.
N/A	N/A	(a) New O.S.B. structure(s)
N/A	N/A	(b) Structural evaluation of existing O.S.B. structure(s) that are to remain in place or to be relocated.
N/A	N/A	(2) High Mast Illumination Poles (HMIP)
N/A	N/A	(3) Traffic Signal Supports
N/A	N/A	(4) Conventional Illumination Poles
N/A	N/A	(5) Sound Barrier Walls
N/A	N/A	b. Checklist for Layouts
		(1) Reference appropriate O.S.B. standard
		(2) Drilled shaft size and length
		(3) Soil strength used for design {indicate basis and boring(s) used}
		(4) Design height
		(5) Tower heights
		(6) Leg spacings
		(7) Design wind speed
N/A	N/A	c. Foundation Studies (Show cost estimate with Function Code 110) The soils exploration requirements for miscellaneous structures on this project are as follows: (To be provided by the Engineer on an as-needed basis)
		8. Agreements
YES	N/A	a. Utility Agreements
YES	N/A	b. Exhibits for Utility Agreements
N/A	N/A	c. Railroad Agreements
		d. Railroad Exhibits
N/A	N/A	(1) Railroad Underpasses
N/A	N/A	(2) Railroad Overpasses
N/A	N/A	(3) Railroad Grade Crossing (Replanking)
N/A	N/A	(4) Railroad Grade Crossing Warning Systems (Signals)
N/A	N/A	(5) Other Miscellaneous Sketches for Railroads
N/A	N/A	e. Traffic Signal Agreements
N/A	N/A	f. Exhibits for Traffic Signal Agreements
N/A	N/A	9. Estimate
N/A	N/A	10. Specifications and General Notes

EXHIBIT "B"
SCOPE OF SERVICES TO BE PROVIDED BY THE ENGINEER

SECTION 11 - ADDITIONAL BRIDGE DESIGN

(Function Code 170)

Services Provided By: ENGINEER	LPA		NUMBER REQUIRED
		1. Preparation of Structural Details	
		a. New Structure(s)	
N/A	N/A	(1) Underpass(es)	
N/A	N/A	(2) Overpass(es)	
N/A	N/A	(3) Main Lanes	____
N/A	N/A	(4) Direct Connector(s)	____
N/A	N/A	(5) Ramp Bridge(s)	____
N/A	N/A	(6) Waterway Structure(s)**	____
N/A	N/A	(7) Pedestrian Structure(s)	____
N/A	N/A	(8) Utility Structure(s)	____
N/A	N/A	(9) Railroad Underpass(es)	____
N/A	N/A	(10) Railroad Overpass(es)	____
N/A	N/A	(11) Bridge Classification Culvert(s)**	____
N/A	N/A	(11) Alternate Structural Designs	____
N/A	N/A	(12) Alternate Foundation Design	____
		Total New Structures =	
		b. Existing Structure(s)	____
N/A	N/A	(1) Bridge Widening, Rehabilitation and/or Modification of Existing Structure(s)	
N/A	N/A	(2) Bridge Replacement	____
N/A	N/A	(3) Raising Bridge Elevation	____
N/A	N/A	(4) Bridge Classification Culvert(s) Widening and/or Modification of Existing Structures(s)	____ ____
N/A	N/A	(5) Railroad Overpass(es)	____
N/A	N/A	(6) Railroad Underpass(es)	____
		Total Existing Structures =	____

* Countour plots of bridge gores are required for projects involving ramps within the main bridge in order to ensure project transition. The Template data and vertical alignment necessary to generate the contour plots are also required.

** In the early stages of a project, it sometimes cannot be determined whether a Waterway Bridge Structure or a Bridge Classification Culvert (20' minimum length) will be required. Therefore, the ENGINEER should be aware that either of these two types of bridges may be reclassified later in the project for the other type when more information is known that would dictate a change in structure classification.

EXHIBIT "B"
SCOPE OF SERVICES TO BE PROVIDED BY THE ENGINEER

Services Provided By: ENGINEER	LPA	
N/A	N/A	2. Preparation of Bridge Layouts (each bridge)

a. Bridge Layouts (PLAN)
   (1) Horizontal curve information or bearing of centerline.
   (2) Including horizontal, vertical, and template information of all roadways or railroads crossed.
   (3) Bearing of center line or reference line.
   (4) Skew angle(s).
   (5) Slope for header banks and approach fills.
   (6) Control stations at beginning and ending of bridge (with deck elevation), intersections, etc.
   (7) Approach pavement and crown width.
   (8) Bridge roadway width and curbs, face of rail, shoulders, or sidewalks.
   (9) Approach slab and curb returns.
   (10) Limits and type of riprap.
   (11) Proposed features under structure.
   (12) Location of profile grade line.
   (13) North arrow.
   (14) Typical bridge roadway section including preliminary proposed beam types and spacings.
   (15) Cross slope and super elevation data.
   (16) Minimum horizontal clearances when applicable.
      (a) Dimensions to features that control clearances. (Calculate and indicate points of minimum vertical and horizontal clearances.
   (17) Location of soil core holes (station and offset), shown on layout.
   (18) Bent stations and bearings.
   (19) Retaining wall locations.
   (20) Traffic flow directional arrows.
   (21) Railing types shown.
   (22) Joint types and seal size, if used.
   (23) Beam line numbers consistent with span details.
   (24) Critical horizontal clearances (location of railroad tracks, nearby structures and utilities).
   (25) Bearings of utilities.

b. Bridge Layouts (ELEVATION)
   (1) Type of foundation.
   (2) Finished grade elevations at beginning and end of bridge.
   (3) Overall length of structure.
   (4) Length, type of spans and units.
   (5) Type of railing.
   (6) Minimum calculated vertical clearance(s).
   (7) Existing and proposed ground lines clearly marked.
   (8) Grid elevations and stations.
   (9) Bent numbers encircled.
   (10) Stationing of bridge compatible with grid stations.
   (11) Standard title.
   (12) Profile grade data.
   (13) Type of riprap.
   (14) Soil Core Hole information with penetrometer test data shall be shown on the bridge layout at correct station, elevation and scale.
   (15) Fixed/expansion condition of all bents.
   (16) Column "H" heights.
   (17) Number, size and length of foundations.

EXHIBIT "B"
SCOPE OF SERVICES TO BE PROVIDED BY THE ENGINEER

Services Provided By: ENGINEER	LPA	
N/A	N/A	2. Preparation of Bridge Layouts (each bridge) *(continued)* c. Additional layout requirements for waterway structures and bridge classification culverts. (1) Design and 100-year peak discharges. (2) Design and 100-year high water (HW) (Recorded HW and date if available) (3) Natural and through-bridge velocities for design and 100-year floods. (4) Calculated backwater for design and 100-year floods. (5) Direction of flow for waterway crossings. (6) Contours for water crossing.
N/A	N/A	3. Bridge Classification Culvert, Estimate, Quantities, and Specifications (each bridge)
N/A	N/A	4. Foundation Studies (Show cost estimate with Function Code 110) The minimum number of soil core holes shall be obtained in accordance with Section 1-301 of the Bridges and Structures Foundation Exploration and Design Manual. Soil core holes shall be obtained at approximately (300 foot) intervals along bridge alignments. Texas cone penetrometer (TCP) tests shall be conducted in all soil types encountered at a maximum of (10 foot) intervals. If single column bents with single drilled shafts are planned, TCP values should be taken at close intervals in the upper (15 feet).
N/A	N/A	5. Bridge Total Quantities and Cost Estimates (each bridge)
N/A	N/A	6. Bridge Special Provisions and Specifications (each bridge)
N/A	N/A	7. Bearing seat elevations for each beam or girder. Top of cap elevations for non-beam type structures.
N/A	N/A	8. General Guidelines for Bridge Design a. The ENGINEER shall prepare a bridge layout of each bridge structure for Company's review and approval. The bridge layout shall be in conformance with the Bridges and Structures, Operation and Planning Manual and the Bridges and Structures, Detailing Manual. Soil core hole data is not required for submission of the preliminary bridge layout. **No bridge design work is to be performed until the LPA has given the engineer written approval of the preliminary bridge layout.** Several months may be required, after the preliminary bridge layout is submitted, for the district to obtain approval and/or permits from the following: • TxDOT Design Division, when applicable: - Railroad Companies - FHWA - U.S. Army Corps of Engineers - U.S. Coast Guard - Bureau of Reclamation - Texas Parks and Wildlife - Others Therefore, the bridge layout should be submitted at the earliest possible date and the ENGINEER's design schedule should reflect this. b. All bridge superstructure and substructure design will be reviewed by the Design Division for purposes of verifying structural integrity and optimization of design. c. The final bridge layout shall be in conformance with the Bridges and Structures, Operation and Planning Manual and the Bridges and Structures Detailing Manual.

Services Provided By:
ENGINEER LPA

8. General Guidelines for Bridge Design *(continued)*

d. The ENGINEER shall make final design calculations and final detail drawings in accordance with standard requirements of the Texas Department of Transportation. All bridge design shall be in conformance with the Texas Department of Transportation Bridges and Structures Operation and Planning Manual, the current American Association of State Highway and Transportation Officials or American Railway Engineers Association Specifications for railway structures, Standard Specifications for Highway Bridges, including applicable interim specifications, and the Bridges and Structures, Foundation Exploration and Design Manual. The ENGINEER shall furnish design calculations to the Design Division. **The designer and checker shall check all calculations and initial each page.**

e. Structural steel or prestressed concrete shop drawings, form work drawings and false work drawings are not part of the design requirements. However, contract plans shall be in sufficient detail to permit the preparation of complete shop details for fabrication and erection.

f. Elements of the bridge (abutments, bents, slabs, etc.) shall be detailed to a metric scale of 1:20 (1/2 inch equals one foot architect scale) or 1:50 (1/4 inch equals one foot architect scale) to provide clear legible drawings when the drawings are reduced. Lettering shall be a minimum size of 4 millimeters (5/32 inch) height for hand lettering and 140 for lettering by computer-aided design and drafting (CADD).

g. Standard drawings for beams, diaframs, railings, armor joints, riprap, etc., shall be furnished to the ENGINEER upon request. These standards shall not be redrawn by the ENGINEER nor shall his title block be transferred to the standard drawings. Modifications to the standards, if necessary, shall be clearly identified and designated by "MOD" in the standard title. Specific special drawings prepared by the ENGINEER shall not be identified as standards.

h. Bridge layout sheets shall have the same vertical and horizontal scale. Usually a metric scale of 1:100 (1 inch = 10 feet) or 1:200 (1 inch = 20 feet) is used. Sections of existing and proposed structures usually have a metric scale of 1:50 (1 inch = 5 feet). Soil core holes shall be positioned and labeled on the bridge layout plan view. The core hole data shall be plotted at the correct station, at the same vertical scale, and at the proper elevation unless otherwise approved by the Design Division.

i. APPENDIX C, "GENERAL PLAN CHECKLIST", on pages C-1 thru C-5, more specifically relates various sheet types, details, summaries, standards, etc.

j. For purposes of uniformity statewide, soil core hole data shall be shown on layouts as illustrated in the Bridges and Structures Foundation Exploration and Design Manual.

k. Geometry and structural design errors found after acceptance of bridge plans shall be promptly corrected by the consultant at no cost to the Company.

EXHIBIT "B"
SCOPE OF SERVICES TO BE PROVIDED BY THE ENGINEER

SECTION 13 - FC 600 – ACQUISITION PROVIDER SERVICES
(for EST. 68 PARCELS AND 0 RELOCATIONS/DISPLACEMENTS)

(Services to be provided by L&G Engineering)

Services Provided By: ENGINEER	LPA	
		1) PROJECT ADMINISTRATION
YES	NO	a) Negotiation of Scope of Services for Work Authorization i) Acquisition Provider will visit project site with COUNTY personnel if necessary.
YES	NO	b) Project Presence at L&G Consultant Office Headquarters i) Full Project Office (1) No Joint Use of COUNTY facilities (2) Open during normal COUNTY work hours (3) Personnel available to answer questions (4) Availability of Project Files (5) At least one office staff member is required to be a current commissioned notary public.
YES	NO	c) Overhead Costs i) Administrative costs
YES	NO	d) Communication i) Provide monthly progress reports with invoice. ii) Participate in project review meetings as determined by the COUNTY. iii) Prepare initial property owner contact list for use by the COUNTY in distribution of Acquisition Provider introduction letters. iv) Prepare and Mail via Certified, Return Receipt Requested method, all introduction letters for each individual parcel.
YES	NO	e) File Management i) Project and parcel files will be kept in the COUNTY's Office, if necessary. Working files will be kept in the Acquisition Provider's project administrative office, but documents generated or received by the Acquisition Provider will be forwarded to the COUNTY office as they are generated or received by the Acquisition Provider, if necessary. ii) Prepare payment transmittal request utilizing standard payment submissions forms with supporting documentation. iii) Maintain records of all payments including check number, amount, and date paid, etc. iv) Provide copies of all incoming and outgoing correspondence as generated if requested by COUNTY at provider conference. v) Maintain copies of all correspondence and contacts with property owners.
		2) TITLE SERVICES
YES	NO	a) Secure preliminary title commitments from the Title Company that will be providing title insurance. Cost of preliminary title commitments will be paid by the Acquisition Provider (if requested by the title company) and will be included in the Acquisition Provider's scope of work for payment and paid as a separate item.
YES	NO	b) Secure title commitment updates in accordance with insurance rules and requirements for parcel payment submissions. Cost of title commitment updates will be paid by the Acquisition Provider (if requested by the title company) and will be included in the Acquisition Provider's scope of work and paid as a separate item.
YES	NO	c) Secure title insurance for all parcels acquired, insuring acceptable title to COUNTY OF HIDALGO. Written approval by the COUNTY required for any exception.

EXHIBIT "B"
SCOPE OF SERVICES TO BE PROVIDED BY THE ENGINEER

Services Provided By: ENGINEER	LPA	
		3) APPRAISAL
YES	NO	a) Appraiser may be selected from TxDOT's Department Certificate for Professional Real Estate Appraisers. This list will be available for review at all District offices or at the Right of Way Division Office at 118 E. Riverside Drive, Austin, Texas, upon request.
YES	NO	b) Secure written permission (if necessary) from the owner to enter the property from which land is to be acquired. If the Acquisition Provider and/or the fee appraiser, after diligent effort, are unable to secure the necessary letter of permission from the property owner, a waiver must be obtained, in writing from the COUNTY. Maintain permission letters with appraisal reports.
YES	NO	c) Prepare (if necessary) pre-appraisal contact with interest owner(s) for each parcel using acceptable COUNTY forms.
YES	NO	d) Contact property owners or their designated representative to offer opportunity to accompany the appraiser on the appraiser's inspection of subject property. Maintain record of contact in file.
YES	NO	e) Prepare complete appraisal report for each parcel to be acquired utilizing TxDOT Forms No. ROW-A-5 and ROW-A-6 as applicable. These reports shall conform to COUNTY policies and procedures along with the Uniform Standards of Professional Appraisal Practices.
YES	NO	f) As necessary, prepare written notification to COUNTY of any environmental concerns associated with the right of way to be acquired which could require environmental remediation.
YES	NO	g) All completed appraisals will be administratively reviewed by L&G Engineering ROW Office and recommended for approval by COUNTY.
YES	NO	h) As necessary, the appraiser will appear and or testify as an Expert Witness in eminent domain proceedings and be available for pre-hearing /pre-trial meetings as directed by L&G Engineering and/or COUNTY.
YES	NO	i) As necessary, the appraiser will coordinate with review appraiser regarding revisions, comments, or additional information that may be required.
YES	NO	j) The cost of the appraiser appearing as an expert witness for testimony at special commissioners hearing must be included in the proposed fee schedule for the appraiser. The cost of the appraiser's expert witness testimony for trial is not part of this contract, and shall be paid by the COUNTY.
		4) APPRAISAL REVIEW
YES	NO	a) Review Appraiser may be selected from TxDOT's Department Certificate for Professional Real Estate Appraisers. This list is available for viewing at all District offices or the Right of Way Division office at 118 E. Riverside Drive, Austin, Texas upon request.
YES	NO	b) Review all appraisal reports for each parcel to determine consistency of values, supporting documentation related to the conclusion reached and compliance with COUNTY policies and procedures and the Uniform Standards of Professional Appraisal Practices.
YES	NO	c) Prepare and submit to COUNTY the Form ROW-RTA-10 "Tabulation of Values", for each appraisal.

Services Provided By: ENGINEER	LPA	
YES	NO	d) The cost of the review appraiser appearing as an expert witness for testimony at special commissioners hearing must be included in the proposed fee schedule for the review appraiser. The cost of the appraiser's expert witness testimony for trial is not part of this contract, and shall be paid by the COUNTY.
		5) APPRAISAL UPDATES
YES	NO	a) Prepare complete appraisal update for the parcel to be acquired utilizing TxDOT Form No. ROW-A-5. These reports shall conform to COUNTY policies and procedures along with the Uniform Standards of Professional Appraisal Practices.
YES	NO	b) As necessary, prepare written notification to COUNTY of any environmental concerns associated with the right of way to be acquired which could require environmental remediation. All completed appraisals will be administratively reviewed by L&G Engineering Right of Way Office and recommended for approval by COUNTY.
YES	NO	c) As necessary, the appraiser will appear or testify as an Expert Witness in eminent domain proceedings and be available for pre-hearing or pre-trial meetings as directed by the COUNTY.
YES	NO	d) The cost of the appraiser appearing as an expert witness for testimony at special commissioners hearing must be included in the proposed fee schedule for the appraiser. The cost of the appraiser's expert witness testimony for trial is not part of this contract, and shall be paid by the COUNTY.
YES	NO	e) As necessary, the appraiser will coordinate with the review appraiser regarding corrections and/or additional information that may be required.
		6) NEGOTIATION, TASKS AND FEES (Negotiations of Providers must be licensed as either a broker or sales agent under the Real Estate License Act.)
YES	NO	a) Analyze appraisal and appraisal review reports and confirm the COUNTY's approved value prior to making offer for each parcel.
YES	NO	b) Analyze preliminary title report to determine potential title problems, propose methods to cure title deficiencies.
YES	NO	c) Prepare the initial offer letter, instruments of conveyance, and any other documents required or requested by COUNTY on applicable COUNTY forms.
YES	NO	d) Mail (Certified Mail Return Receipt Requested) initial offer letter, draft deed, Bill of Rights Brochures, Acknowledgement of Appraisal and Appraisal Reports to address confirmed with the Appraisal District of Hidalgo County. Maintain follow-up contacts and secure the necessary instruments upon acceptance of the offer for the closing.
YES	NO	e) Provide a copy of the appraisal report for the subject property exclusively to the property owner or authorized representative at mailing of initial offer. Maintain original signed Receipt of Appraisal. (unless property owner refuses to sign it).
YES	NO	f) Respond to property owner inquiries verbally and in writing within two business days.
YES	NO	g) Prepare a separate negotiator contact report for each parcel per contact.

EXHIBIT "B"
SCOPE OF SERVICES TO BE PROVIDED BY THE ENGINEER

Services Provided By: ENGINEER	LPA	
YES	NO	h) Maintain parcel files of original documentation related to the purchase of the real property or property interests.
YES	NO	i) Advise property owner on the Administrative Settlement process. Transmit to COUNTY any written counter offer from property owners including supporting documentation, and provider recommendation with regard to Administrative Settlements in accordance with COUNTY policy and procedures.
YES	NO	j) Prepare final offer letter, documents of conveyance as necessary.
YES	NO	k) Appear and provide Expert Witness testimony as an Acquisition Provider when requested.
YES	NO	l) Meet at the L&G Engineering ROW office in Mission once per week as agreed-upon with the Right of Way Acquisition Manager/Administrator.
YES	NO	m) Provide a monthly progress report per parcel by the 25th of the month with invoice.
YES	NO	n) The consultant shall, as part of this proposal, estimate 10% of the parcels identified on Page 37 may result in condemnation. The consultant shall be available for any meeting/hearings as requested by the COUNTY Attorney.
		7) CLOSING SERVICE FEES
YES	NO	a) Coordinate with COUNTY and Title Company to obtain an updated title commitment along with other Forms and certified copy of the instrument of conveyance necessary when requesting the Parcel Payment from the COUNTY.
YES	NO	b) Acquisition Provider shall attend closings and provide closing services in conjunction with Title Company.
YES	NO	c) Acquisition Provider shall record all original instruments immediately after closing at the respective County Clerk's Office, except for donations which must be forwarded to COUNTY for acceptance by the COUNTY.
		8) RELOCATION ASSISTANCE SERVICES (separate Work Authorization will be issued once relocations have been identified, unless noted otherwise).
N/A	N/A	a) The amount of relocations or displacements as identified. L&G will provide relocation advisory services. L&G will compute replacement housing supplements (owner occupant and/or tenants)
N/A	N/A	b) L&G will provide advisory services to business displacements and relocate them effectively.
N/A	N/A	c) COUNTY will review, approve and pay for all relocation costs as per the Agreement.
		9) CONDEMNATION SUPPORT
YES	NO	a) Pre-Hearing Support i) Upon receipt of a copy of the final offer, request an updated title commitment for Eminent Domain from the Title Company. ii) Prepare a Bisection Clause for the original set of Legal Descriptions supplied by Surveyor, if applicable. iii) Use the information from the Title Commitment to join all interested parties on the necessary forms. Spouses of owners must also be joined.

EXHIBIT "B"
SCOPE OF SERVICES TO BE PROVIDED BY THE ENGINEER

Services Provided By: ENGINEER	LPA	
		iv) Upon completion of the necessary forms, prepare a packet containing 2 copies each of the following documents: Title Commitment, Negotiator's Reports, Appraisal Acknowledgment, Preappraisal Contact Sheet, signed and sealed property description, and plat, Final Offer Letter, any correspondence from the land owner or representatives, along with one copy of the appraisal report. Submit packet to the COUNTY Office for submission to the COUNTY Attorney's office.
		v) Upon receipt of concurrence for the Appraisal Witness, request the update of appraisal.
		vi) Upon receipt of packet prepared by the COUNTY Attorney which will include Petition for Condemnation, Lis Pendens, Order Appointing Special Commissioners, Order Setting Hearing, Oath of Special Commissioner, and Notice of Hearings, developedby the COUNTY Attorney; the attorney shall file the original petition with the COUNTY Court at Law or other appropriate Court for a cause number to be assigned.
		vii) The COUNTY attorney shall file the Lis Pendens including the cause number with the COUNTY Clerk's Office.
		viii) Upon assignment of a court, the COUNTY Attorney shall file the Order Appointing Commissioners with the judge retaining a copy of the Order for the files.
		ix) Following appointment of Special Commissioners by the judge, the COUNTY shall secure the following documents: Oath of Commissioners signed by the Commissioners, Order Setting Hearing, 2 copies of the Notice of Hearing signed by the Commissioners.
		x) The COUNTY shall file all originals with the court and send copies marked "copy" to L & G Engineering.
		xi) The COUNTY Attorney shall send a copy of the petition to the Title Company so that the Title Company can make sure the appropriate parties were joined and that no changes in title have occurred.
		xii) The COUNTY Attorney shall set the Special Commissioners Hearing after the updated appraisal has been submitted, if there is no change in value. If there is an increase in value, COUNTY will approve the new value and the COUNTY's provider will present a revised offer and a final offer letter and submit a copy of the final offer letter.
		xiii) The COUNTY Attorney shall coordinate a pre-hearing conference prior to the hearing (the day before or earlier) to discuss facts of the case with the COUNTY, Appraiser, and Negotiator.
		xiv) After the hearing is set, the COUNTY Attorney shall serve Notices of Hearing to the indicated parties at least 11 days prior to the Commissioner's hearing. If it is necessary to join the Federal Government, be advised that they have an additional 60 days to prepare for the Hearing.
		xv) Once the notices have been served, the COUNTY Attorney shall file the original notices with the court and send copies stamped "copy" to L&G Engineering ROW Office.
		xvi) The COUNTY's Attorney shall send a reminder letter 2-3 weeks in advance to the COUNTY Administration offices, Acquisition Provider, the three special commissioners and court reporter concerning Hearing dates.
YES	NO	b) Post Hearing Support (by COUNTY Attorney)
		i) For the hearing, prepare the necessary forms and Special Commissioners time sheets and submit forms to Hidalgo COUNTY clerk's office.
		ii) Obtain the signatures of Special Commissioners on the Award of Commissioners and file with the court for the judge's signatures within 48 hours of the Hearing.
		iii) Give timesheets to Judge. The amount paid to the Special Commissioners is determined by the Judge.
		iv) Obtain and distribute 3 certified copies of the award as follows: 1 certified copy to the title company with a request for a commitment, 1 certified copy to the COUNTY, 1 certified copy to L&G Engineering with the Commitment to request the warrant in the amount of the Special Commissioners Award.

Services Provided By:
ENGINEER LPA

v) Send the Commitment and the Award to COUNTY, along with individual special commissioner's billing requesting the payment for their fees.
vi) File COUNTY warrant in the registry of the court. File a Notice of Deposit with the court and send certified copies to each defendant notifying them of the date of the deposit. The Date of Deposit is the Date of Take.
vii) Take photograph of the interest to be acquired (if necessary) on the day of deposit for relocation verification.
viii) Send written notices of the date of deposit to the COUNTY Administration office and all interested parties.
ix) Appear as Expert Witness as requested. Sub-contractors must also appear as Expert Witnesses as requested.
x) All acquisition negotiations file indicating all "due diligence" provided by the Acquisition Provider will be directed to the COUNTY Attorney's office for his further handling in accordance to the Eminent Domain process by the COUNTY.

10) COMPENSABLE UTILITIES

Utility Accommodation is an integral factor in road construction and design. Coordination of utility adjustments is a necessary function within planning, design, acquisition and construction and requires the administration of property rights issues, utility policy, and reimbursement of eligible utility adjustments. It includes the following tasks:

YES NO a) Preliminary Design Consultations
i) Conduct Field Investigation and review Certificate of Convenience and Necessity boundaries to identify utility providers within the project area. Communications through letter, phone calls and email to establish a contact list. Coordinate data gathering by surveyors and design team. Introduce project to utility providers.

YES NO b) Field Observations and Verifications
i) Provide maps to Utility providers to "redline" and identify conflicts. Coordinate exposures and data collection by surveyor. Provide and confirm utility data on project maps. Order Utility Location Service.

YES NO c) Exchange of Information with Utility Providers
i) Provide project schedule.
ii) Request schedules for utility adjustments.
iii) Identify who is responsible for utility process.

YES NO d) Confirmation of Property Interests
i) Request Documents.
ii) Coordination of data on maps and citation of property interest documents.
iii) Confirm utilities are within easements.

YES NO e) Coordination of Agreements
i) Identify utilities that are compensable.
ii) Determine parties and agreements necessary to complete compensable process.
iii) Coordinate execution and processing of Standard Utility Agreements.

YES NO f) Utility Meetings throughout project development
i) Set up and coordinate utility meetings during planning, design, acquisition and construction phases.
ii) Attend and participate in meetings by other parties.

EXHIBIT "B"
SCOPE OF SERVICES TO BE PROVIDED BY THE ENGINEER

Services Provided By: ENGINEER	LPA	
		11) PAYMENT SCHEDULE
YES	NO	a) Project Administration
		i) Payment and Milestones
		(a) Full Project Office
		(1) Lump Sum Basis (assume 1 year project presence)
		(2) Initial payment of 25% upon establishment of a project office with functional phone and utility services.
		(3) Remainder paid out in equal monthly installments of 15% starting the following month.
		(4) Monthly billing to COUNTY OF HIDALGO will be required.
		b) Title Services
		ii) Payment
		(a) Per Parcel basis.
		iii) Milestones
		(a) 100% upon securing initial title commitment.
		c) Appraisal Services
		i) Payment
		(a) Per Parcel Basis
		ii) Milestones
		(a) 100% paid upon delivery of complete and acceptable appraisal report
		d) Appraisal Review
		i) Payment
		(a) Per Parcel Basis
		ii) Milestones
		(a) 100% upon submission of ROW-A-10
		e) Appraisal Update
		i) Payment
		(a) Per Parcel Basis
		ii) Milestones
		(a) 100% upon delivery of complete and acceptable appraisal update.
		f) Negotiation, Task, and Fees
		i) Payment
		(a) Per Parcel Basis
		ii) Milestones
		(a) 80% upon presentation of initial offer.
		(b) 20% upon successful negotiation and all instruments are recorded.
		g) Closing Service Fees
		i) Payment
		(a) Per Parcel Basis
		ii) Milestones
		(a) 100% upon recordation of instrument of conveyance.
		h) Relocation Assistance
		i) Payment
		(a) Per Relocation
		ii) Milestones
		(a) 100% upon issuance of 90-day vacancy letter.
		i) Compensable Utilities
		i) Payment
		(a) By percent complete

EXHIBIT "B"
SCOPE OF SERVICES TO BE PROVIDED BY THE ENGINEER

ADDITIONAL RESONSIBILITIES

Easements, Letters of Permission, Etc.

The ENGINEER shall be responsible for delineating easements. The ENGINEER will be responsible for securing the necessary legal instruments.

Coordination of Utilities

The ENGINEER shall furnish the LPA prints of a project layout which will be distributed by ENGINEER to various utility companies to determine which utilities are in the limits of the project. These shall be preliminary layouts. Upon completion of the preliminary drainage plans and U&D sheets, the ENGINEER shall distribute to the various utility companies and request return. Upon return of these prints, the ENGINEER will schedule a meeting with the various utility companies to discuss potential conflicts and conformance with the State's Utility Accommodation Policy. The ENGINEER is responsible for coordination with the various utility companies for exposing potential conflicts and field ties to uncover utilities in potential conflict areas.

Meetings

Meetings will be held with the FHWA, State Officials, local governments, property owners, utility owners, railroad companies, other consulting firms, etc., as needed or required by the LPA. The ENGINEER shall coordinate through the LPA for the development of this project with any local entity having jurisdiction or interest in the project (i.e., city, county, etc).

Specifications, Special Provisions, Special Specifications

Use the State's standard specifications or previously approved special provisions and/or special specifications. If a special provision and/or special specification is developed for this project, it shall be in the State's format and incorporate references to approved State test procedures.

Project Manager/Engineer Communication

The ENGINEER shall designate one Texas Registered Professional Engineer to be responsible throughout the project for project management and all communications, including billing, with the LPA's Director. Any replacements to the ENGINEER's designated Project Manager/Engineer must be approved by the LPA.

Engineering documents produced for the department's engineering projects shall be signed, sealed and dated or CADD sealed in accordance with Administrative Order No. 5-89 and Administrative Circular No. 26-91.

Design Responsibilities

The ENGINEER is responsible for design errors and/or omissions that become evident before, during or after construction of the project. The ENGINEER's responsibility for all questions arising from design errors and/or omissions will be determined by the LPA and all decisions shall be final and binding. This would include, but not necessarily be limited to:

1. All design errors and/or omissions resulting in additional design work to correct the errors and/or omissions.
2. Preparation of design documents and detail drawings necessary for a field change due to design errors and/or omissions.
3. Revision of original tracings to the extent required for a field change due to design errors and/or omissions.

The ENGINEER shall promptly make necessary revisions or corrections resulting from the ENGINEER's errors, omissions or negligent acts without additional compensation. Acceptance of the work by the LPA will not relieve the ENGINEER of the responsibility for subsequent correction of any such errors or omissions or for clarification of any ambiguities.

EXHIBIT "B"
SCOPE OF SERVICES TO BE PROVIDED BY THE ENGINEER

Document and Information Exchange

Data, Plan Sheets, General Notes and/or Specifications provided to the LPA shall be furnished on 8GB USB flash drives. Each 8 GB flash drive shall have a file titled Table of Contents. The Table of Contents shall indicate the locations of files within the directory structure of the documentation.

General Notes and specifications shall be provided in MS Office 2007 format. Plan sheets shall be provided in Microstation DGN or GEOPAK GPK format. PDF copies of plan sheets shall also be provided.

Two copies of the documentation shall be provided to the LPA.

If required, the ENGINEER shall provide to the LPA, a CD that contains all the plan sheets for the project. The graphics tape shall be compatible with the LPA's computer system.

CD Tape Required (YES or NO): YES

Proposal Time

The time indicated in the proposal and the contract shall include time necessary for reviews, approval, etc.

Office Location

The ENGINEER will perform the services to be provided under this agreement out of their office or offices listed below:

Service	Office Location
PS&E	Mission Office
Schematic	Mission Office
Environmental Document	Mercedes Office

The work effort will be managed out of the Mercedes (City)

office located at 2100 West Expressway 83 (Address),

Mercedes (City), Texas (State).

APPENDIX A - PLAN SHEET SEQUENCE PROCEDURE

1. Title Sheet
   Detailed Index of Sheets

2. Typical Sections

3. General Notes and Specifications Data

4. Estimate and Quantity Sheets

5. Storm Water Pollution Prevention Plan (SW3P) Sheets

6. Traffic Control Plans
   a. Sequence of Construction Layouts
   b. Detour Plan/Profile/Typical Sections/Quantities

7. Roadway Layouts
   a. Roadway Plan/Profile Sheets
   b. Intersection Plan/Profile Sheets
   c. Intersection Layouts
   d. Alignment Layouts/Data
   e. Ramp Layouts/Profiles
   f. Connection Roads/U-turns Layouts/Profile

8. Roadway Details
   a. Concrete Pavement Details/Standards
   b. Concrete Pavement Terminal Anchorage Details/Standards
   c. Bridge Approach Details/Standards
   d. Bridge Terminal Anchorage Details/Standards
   e. Roadway/Median Barrier Details/Standards
   f. Curb Details
   g. Driveway Details/Typical Sections/Standards

9. Signing Layouts and Marking Layouts

10. Traffic Signal Layouts

11. Lighting Layouts

12. Illumination Detail Standards (HMID, HMIF, HMIP, RID)

13. Utility Layouts/Profiles

14. Drainage Area Maps and Hydraulic Data
   a. General Drainage Area Maps
   b. Stage-Discharge Curves
   c. Main Cross-Drainage Culvert/Bridge Hydraulic Data
   d. Drainage Area Maps/Culverts/Storm Sewer
   e. Hydraulic Data/Culverts/Inlets/Storm Sewer/Pumps

15. Detailed Drainage Plans
   a. Drainage Plan/Profile Sheets (Storm Sewer Plan/Profile Sheets)
   b. Channel Plan/Profiles/Typical Sections
   c. Box Culvert Plan/Profile
   d. Pipe Sewer/Culvert Cross Sections

APPENDIX A - PLAN SHEET SEQUENCE PROCEDURE (Continued)

16. Drainage Structural Details/Standards
    a. Inlet Details/Standards
    b. Manhole Details/Standards
    c. Junction Box Details/Standards
    d. Safety End Treatment Details/Standards
    e. Box Culvert Details/Standards
    f. Culvert Wingwall Details/Standards
    g. Excavation-Backfill Diaphrams
    h. Riprap Details/Standards
    i. Temporary Pollution and Erosion Control Details

17. Pumphouse Layouts

18. Pumphouse Details

19. Pumphouse Standard Details

20. Bridge Layouts/Profile/Typical Sections*

21. Bridge Details*
    a. Summary of Bridge Quantities
    b. Abutments
    c. Interior Bents
    d. Spans
    e. Special details for the specific bridge

22. Bridge Standard Details*

23. Bridge Railing Standards

24. Retaining Wall Layouts/Profiles**

25. Retaining Wall Details**

26. Retaining Wall Standard Details**

27. Guard Fence/Standards and Signal Pole Standards

28. Signal/Electrical Details/Standards and Signal Pole Standards

29. Signing/Markers/Striping Details/Standards

30. Barricade/Construction/Beacon Standards

31. Miscellaneous Standards
    a. Chain Link Fence Standards
    b. Bridge End Detail/Standards
    c. Roadway Clearance Details/Standards
    e. Attenuator Standards

NOTE: Variations of these plan sheet sequence guidelines may be permitted if approved in writing by the County.

APPENDIX B - PLAN PREPARATION PROCEDURES

1. Title Sheet
   The ENGINEER shall be responsible for completing the title sheet as required and formatted by the STATE and as discussed in Part V of the Highway Design, Operations and Procedures Manual. Refer to Section K - Plans, 1 - Title Sheets, page 5-24, for the procedure to be used regarding all plans prepared by the ENGINEER.

2. Project Layout
   The project layout shall clearly depict the entire project as it is proposed and will usually be drawn at a scale of 1 inch=100 feet or 1 inch=200 feet, depending on the size of the project.

3. Typical Sections
   See Part IV of the Highway Design, Operations and Procedures Manual.

4. Sequence of Work Sheets (Traffic Control Plan)
   Clarity and completeness should be the rule to follow in preparing these sheets, with particular attention given to location of construction signs and barricades, lane widths, protection of drop offs, etc. For a reference guide use the Texas Department of Transportation, Texas Manual on Uniform Traffic Control Devices. Usual scale of 1 inch=100 feet and/or 1 inch=50 feet for special locations. A narrative sequence shall be included in the special provisions for the project. Staging of structural elements shall be considered. Provisions for drainage shall be considered, included and indicated during all stages of construction operations.

5. Removal Item Sheets
   These sheets indicate removal of existing facilities necessary to the proposed construction. (1 inch=40 feet) (use same scale as plan/profile sheets).

6. Summary Sheets
   Summary Sheets are required to indicate type, quantity and/or location of work for individual items of the proposed project.

7. Alignment Layout Sheets
   These sheets indicate the horizontal alignment with curve data and coordinates usually tabulated thereon. On some projects, depending on size, this information may be included on the plan profile sheets. Usual scale (1 inch=100 feet) or (1 inch=40 feet).

8. Plan Profile Sheet
   Clarity and completeness should be the rule to follow in preparation of these sheets. Usual scale (1 inch=40 feet or 1 inch=50 feet) or (1 inch=20 feet), depending on project complexity.

9. Drainage Area Maps
   Usual scale (1 inch=100 feet) and/or (1 inch=200 feet) supplemented by large scale area maps as necessary.

10. Drainage Plan Profile Sheets
    These sheets may be required on some projects to clearly depict location of inlets, storm sewer lines, and profile of storm sewer lines and laterals. Usual scale (1 inch=40 feet or 1 inch=50 feet) or (1 inch=20 feet). Storm sewer design does include redesign of storm sewers imposed by utility constraints developing after initial reviews by the STATE and consequential redesign and adjustments.

11. Runoff, Inlet, Storm Sewer and Culvert Sheets
    Use standard sheets.

APPENDIX B - PLAN PREPARATION PROCEDURES (Continued)

12. Culvert Cross Sections and Details
District standard reproducible sheets can be furnished (one each) to the ENGINEER for modification of special designs.

13. Manhole and Inlet Details
District standard reproducible sheets can be furnished (one each) to the ENGINEER.

14. Miscellaneous Detail
Curb, Sidewalk, Driveways, etc.

15. Intersection Details

16. Marking Layouts and/or Details
Layouts of the entire project with markings depicted thereon. Usual scale 1:500 (1 inch=40 feet or 1 inch =50 feet). On some projects typical details might suffice.

17. Structural Details
Bridge layout sheets shall have the same horizontal and vertical scale. Usually (1 inch = 10 feet) (1 inch = 20 feet). Sections of existing and proposed structures usually have a scale of (1 inch = 5 feet). Elements of the bridge (abutments, bents, slabs, etc.) shall be detailed to a (1/2 inch = 1 foot) or (1/4 inch equals 1 foot) architect scale to provide clear legible drawings when reduced. Letters shall be a minimum size of 4 millimeters (5/32 inch) height for hand lettering and 140 for lettering by computer-aided design and drafting (CADD).

18. Overhead Sign Bridge Layouts
A maximum of four structures may be shown on each layout sheet. The reference to the appropriate overhead sign bridge (OSB) standard and the following requirements shall be shown on the layout:
(1) Drilled shaft size and length
(2) Soil strength used for design {indicate basis and boring(s) used}
(3) Design height
(4) Tower height
(5) Leg spacings and
(6) Design wind speed.
The wind speed design map need not be included in the project plans. Designation of tower member size and anchor bolt size shall not be shown. For OSBs which require special design, the design shall be in accordance with the AASHTO sign specifications (see Item 22 of References on page 49) and to the same loading requirements as for normal standard structures. Structures (special or standard) which will have changeable message signs shall be analyzed by the ENGINEER.

APPENDIX C - GENERAL PLAN CHECKLIST

Services Provided By: ENGINEER	COUNTY	
___	___	Title Sheet
___	___	Project Layout
___	___	Sequence of Work
___	___	Detour Layouts & Profiles
___	___	Construction Pavement Markings
___	___	Signing & Barricades
___	___	Construction Sign & Beacons
___	___	Typical Sections
___	___	Shaping & Finishing Sections
___	___	Slopes Adjacent to Shoulders
___	___	Estimate & Quantities
___	___	General Notes & Specification Data
___	___	Grading Summary
___	___	Miscellaneous Summaries (See following "SUMMARIES" heading)
___	___	Horizontal Curve Data & Alignment Layouts
___	___	Drainage Summaries
___	___	Structure Summaries
___	___	Erosion Control Summary & Details
___	___	Plan/Profile Sheets
___	___	Erosion Control Summary & Details
___	___	Pavement Contours
___	___	Superelevation Transition (If Required)
___	___	Grading Contours
___	___	Guard Fence Layouts
___	___	Storm Water Pollution Prevention Plans (SW3P)
___	___	Drainage Area Maps
___	___	Hydraulic Data
___	___	Drainage Sheets
___	___	Bridge Hydrology Sheets
___	___	Inlet & Manhole Details
___	___	Utility Support Details
___	___	Culvert Cross Sections & Details
___	___	Special Culvert Designs
___	___	Special Drainage Details
___	___	Chain Link Fence Locations
___	___	Ramp Details Sheet
___	___	Removal Item Sheet - Including detours
		(Shown in detour summary, No payment for removal; subsidiary to construction detours)
___	___	Pavement Details
___	___	Pavement Standard Modification for Concrete Shoulder
___	___	Concrete Pavement Continuously Reinforced (CPCR)
___	___	Concrete Pavement Contraction Design (CPCD)
___	___	Concrete Pavement Details - Jointed Reinforced (Steel Bars) (CPJR)
___	___	Bridge Approach Slab Details
___	___	Vehicle Attenuator Details
___	___	Miscellaneous Details
___	___	Wheelchair Ramps
___	___	Pavement Marking Details
___	___	Modified Standards
___	___	List of Standards
___	___	Permanent Signing Plans & Quantities

APPENDIX C - GENERAL PLAN CHECKLIST *(continued)*

Services Provided By: ENGINEER	COUNTY	
___	___	Permanent Lighting Plans, Quantities & Standards
___	___	Bridge Layout(s)
___	___	Bridge Details
___	___	Retaining Wall Layout(s)
___	___	Retaining Wall Details
___	___	Pumphouse Details
___	___	Underdrain Details (Retaining Walls)
___	___	Culvert Standards
___	___	Soil Profile
___	___	Temporary Traffic Signals
___	___	Design Cross Sections
___	___	Estimate
___	___	List of Standard Specification, Special Provisions & Special Specifications
___	___	Detour Special Provisions (If Required)
___	___	Construction Time Estimate
___	___	Critical Path Method (CPM)
___	___	Unit Price Documentation
Miscellaneous		
___	___	Conduit Requirements
___	___	Traffic signal Requirements
Summaries		**(ALL BELOW YES FOR ENGINEER AND NO FOR COUNTY UNLESS NOTED OTHERWISE)**
___	___	Salvaging and Placing Topsoil
___	___	Prepare ROW
___	___	Remove Old Structures
___	___	Scarify Existing Pavement
___	___	Remove Old Concrete Curb of Curb and Gutter (C&G)
___	___	Remove Old Concrete Pavement
___	___	Remove Old Concrete Riprap
___	___	Remove Metal Beam Guard Fence
___	___	Galvanized steel Beam Guard Fence (12Ga) (GSBGF)
___	___	Temporary Guard Fence (TEMPGF)
___	___	Summary of Concrete Flumes
___	___	Curbs
___	___	Adjust Manholes & Inlets
___	___	Underdrains
___	___	Base and Pavement
___	___	Large Structure
___	___	Concrete Riprap (RR8 & RR9)
___	___	Temporary Portable Concrete Barrier (PCBR)
___	___	Concrete Traffic Barrier
___	___	Vehicle Attenuator
___	___	Guard Rail Energy Absorbing Terminal (Great System)
___	___	Pavement Markings & Blast Cleaning (Thermoplastic)
___	___	Retaining Walls
___	___	Large Structure Summaries
___	___	Small Structure Summaries

APPENDIX C - GENERAL PLAN CHECKLIST *(continued)*

Services Provided By: ENGINEER	COUNTY	Summaries (ALL BELOW YES FOR ENGINEER AND NO FOR COUNTY UNLESS NOTED OTHERWISE)
___	___	Earthwork (Roadway & Channel) & Channel Details
___	___	Culverts
___	___	Detours
___	___	Seeding or Mulch Sod - Quantity Only
___	___	Inlet & Manholes
___	___	Sidewalks
___	___	Construction Pavement Markings
___	___	Driveways
___	___	Concrete Median
___	___	Storm Sewers
___	___	Head Walls & Safety End Treatments
___	___	Curb Openings
___	___	Manholes
___	___	Chain Link Fence, Remove & Replace Chain Link Fence
___	___	Remove & Relay Reinforced Concrete Pipe (RCP) or Pipe Sewer

EXHIBIT "C"
WORK SCHEDULE
Mile 6 Project
From (Mile 9 to Mile 11)

TASK AND DESCRIPTION	FIRM	2017								2018					
		MAY	JUN	JUL	AUG	SEP	OCT	NOV	DEC	JAN	FEB	MAR	APR	MAY	JUNE
WORK AUTHORIZATION NO. 1															
PHASE II & III: ROW MAP, PS&E, ROW ACQ.															
from Mile 9 to Mile 11															
Re-Evaluation of the EA to include Outfalls in Project Construction	L&G														
Field Surveys for Design and Construction of ROADWAY	L&G														
Field Surveys for Design and Construction of OUTFALLS	L&G														
PS&E Development Roadway	L&G														
Sub-Surface Utility Engineering (SUE)	L&G														
Permanent Signal Designs (Mile 9, Mile 10 and Mile 11)	L&G														
Temporary Signal Designs during Construction	L&G														
Permitted Utilities Coordination to Adjust	L&G														
Right-of-Way Acquisition Services	L&G														
Compensable Utility Management for Acquisition of Property Rights	L&G														

L&G Engineering Tasks

EXHIBIT D-1

ESTIMATED MAN-HOUR BREAKDOWN

MILE 6 PROJECT
from Mile 9 to Mile 11

		MANHOURS									
		Senior Project Manager	Senior Engineer	Senior Environmental Scientist /Specialist	Project Engineer	Senior Engineer Tech	CADD Operator / GIS Analyst	Admin / Clerical	TOTAL HOURS	Sub-Contract Amounts / ROW COST	TOTAL LINE ITEM COST
	CONTRACT RATE	198.10	164.14	158.48	127.35	90.56	62.26	56.60			
WORK AUTHORIZATION NO. 1											
PHASE I - EA, PUBLIC INVOLVEMENT, SCHEMATIC, HYDROLOGIC DESIGN											
1	Addtn'l Costs of Re-evaluation of the Environmental Assessment to include Outfalls in Project Constr.		10	69.828	18				98		$ 15,000.04
2	Field Surveys for Design and Construction of ROADWAY and OUTFALLS (See Exhibit D-1, Page 2)								0	$ 30,820.00	$ -
3	Sub-Surface Utility Engineering (SUE) 25 pot holes/mile (See Exhibit D-1, Page 2)								0	$ 12,500.00	$ -
4	Management of Surveyor	40	60		95.467				195		$ 29,930.12
5	PS&E Development Roadway	100	120		240	2000	1700	39.987	4200		$ 359,296.06
6	Permanent and Temporary Traffic Signal Design at Mile 9, 10 and 11 North		80		240	113.79			434		$ 54,000.02
7	Engineering Fee to Create 1 Set of Plans and Submit through TxDOT	20	30		80	518.174			648		$ 66,000.04
8	Permitted Utilities Coordination to Adjust	10	40		100	454	698	37.928	1340		$ 108,000.04
9	Right-of-Way Costs - Acq. Services (est. 68 Parcels) (See Exhibit D-1, Page 3)								0	$ 844,560.00	$ -
10	Est. Comp. Utility Mngmt. for Acq. of Property Rights & Compensate for Utility Adjust(s)		100		286	460.070			846		$ 94,500.04
SUB-TOTAL		**170**	**440**	**69.828**	**1059**	**3546**	**2398**	**78**	**7761**	**$ 887,880.00**	**$ 726,726.37**

Sub-Total Manhours Fee with Subconsultant Fee:	$ 1,614,606.37
*** TOTAL PROJECT FEE:**	**$ 1,614,606.00**

Exhibit "D"
BUDGET
LUMP SUM RATE BASIS OF PAYMENT

	A	B	C	D	E	F	G	H	I	J	K
1	Project: Mile 6 West					R.O.W. Surveying Services, LLC					
2	County: Hidalgo County										
3	From: Mile 9 North										
4	To: SH 107										
5	Description of Work: Design Survey										
6											
7	TASK AND DESCRIPTION	Survey		Survey	4-man	3-man	2-man	Admin/	Subsurface	Total	Cost
8	FC 150 Field Surveying	PM	RPLS	Technician	Survey Crew	Survey Crew	Survey Crew	Clerical	Utility	Hours	
9	HOURLY RATE	$124.00	$125.00	$82.00	$175.00	$155.00	$130.00	$50.00	$500/ Test Hole		
10	**PHASE 1 - FC 150 Field Surveying (Control Hz & Vt)**										
11	**A. Primary Control**										
12	a. Recover/ Verify set as needed	0	2	2	0	8	0	0		12	$ 1,654.00
13	**B. Secondary Project Control**							0			
14	a. Recover/Verify set as needed	0	2	8	0	8	0	0		18	$ 2,146.00
15	Subtotal Hours	0	4	10	0	16	0	0	0	30	
16	Subtotal Cost - Phase 1	$0.00	$500.00	$820.00	$0.00	$2,480.00	$0.00	$0.00			$3,800.00
17	**PHASE 2 - DTM Topography and Cross sections**										
18	**C. Design Survey**										
19	**1. Intersections (4000' total distance)**	0	0	0	0	8	0	0		8	$ 1,240.00
20	a. Mile 6 and Mile 9 (1000' East and West)	0	0	8	0	24	0	0		32	$ 4,376.00
21	b. Mile 6 and Mile 10 (1000' East and West)	0	0	8	0	24	0	0		32	$ 4,376.00
22	**2. Canal Crossings (4000' total distance)**										
23	a. STA 62+79 (1000' East and West)	0	0	8	0	16	0	0		24	$ 3,136.00
24	5. STA 71+95 (1000' East and West)	0	0	4	0	16	0	0		20	$ 2,808.00
25	**3. Drainage Crossings and Structures(1200' total distance, 3 structures)**										
26	a. STA 146+00	0	0	8	0	16	0	0		24	$ 3,136.00
27	b. Structures	0	0	8	0	8	0	0		16	$ 1,896.00
28	**4. Subsurface Utility Engineering (S.U.E.)**										
29	a. Per Unit/ App. 25 unless advised otherwise								25	0	$ 12,500.00
30	Subtotal Hours	0	0	44	0	112	0	0	25	156	
31	Subtotal Cost - Phase 2	$0.00	$0.00	$3,608.00	$0.00	$17,360.00	$0.00	$0.00	$12,500.00		$33,468.00
32	**PHASE 3 - FINAL REPORT & DELIVERABLES**										
33	A. CADD file (2D & 3D) for limits of project	5	5	5	0	0	0	0		15	$ 1,655.00
34	B. Final Report and Deliverables	5	5	5	0	0	0	5		20	$ 1,905.00
35	Subtotal Hours	10	10	10	0	0	0	5		35	
36	Subtotal Cost - Phase 3	$1,240.00	$1,250.00	$820.00	$0.00	$0.00	$0.00	$250.00			$ 3,560.00
37	**PROJECT MANAGEMENT & OVERSIGHT**										
38	A. Meeting & Coordination w/ Engineers	4	4	0	0	0	0	5		13	$ 1,246.00
39	B. QC/QA Survey	4	4	0	0	0	0	5		13	$ 1,246.00
40	Subtotal Hours	8	8	0	0	0	0	10		18	
41	Subtotal Cost - PM & Oversight	$992.00	$1,000.00	$0.00	$0.00	$0.00	$0.00	$500.00			$ 2,492.00
42											
43											
44	**Total Fee FC 150**	$2,232.00	$2,750.00	$5,248.00	$0.00	$19,840.00	$0.00	$750.00	$22,875.00	239	**$43,320.00**
45											
46	**Grand Total FC 150**										**$43,320.00**

EXHIBIT "D-1"

FEE SCHEDULE - L&G ENGINEERING's ROW ACQUISITION SERVICES

Mile 6

Limits: from Mile 9 to Mile 11

The following is an estimated Parcel No. Cost for completing the subject project's Right-of-Way Acquisition Services as outlined in Exhibit B according to the Exhibit D "Fee Schedule" of the contract. The parcels are estimated from the approved Schematic. **The work and payment, for these services will be accomplished by L&G Engineering and approved and paid for by Hidalgo County Pct. 1- on a percent complete basis as approved by Hidalgo County Pct. 1.** L&G Engineering will be completing the work on the approximate schedule provided in Exhibit C of this Work Order or as approved by Hidalgo County Pct. 1. The Parcels will be acquired either by completing the entire negotiation of the parcel or by modifying the approved schematic to acquire the parcels. This is a lump sum cost proposal.

RIGHT-OF-WAY ACQUISITION SERVICES

Estimated Number of Parcels	Project Admin (Per Parcel)	Title Services Per Parcel	Appraisal Services Per Parcel	Appraisal Review Per Parcel	Appraisal Update	Negotiation Fees Per Parcel	Closing Services Per Parcel	** Relocation (Residential/ Business)	Grand Total of Task
68	$5,820.00	$600.00	$1,000.00	$800.00		$4,000.00	$200.00	0 Residential / 0 Business	
Sub Total of Tasks	$395,760.00	$40,800.00	$68,000.00	$54,400.00	*	$272,000.00	$13,600.00	$0.00	**$844,560.00**

(*) Appraisal Update costs included in Project Administration.
(**) Relocations - $6,000 (Residential), $5,000 (Business)
- Any condemnation support required will be provided by L&G Engineering as part of the administrative costs.

CERTIFICATE OF INTERESTED PARTIES

FORM 1295

Complete Nos. 1 - 4 and 6 if there are interested parties.
Complete Nos. 1, 2, 3, 5, and 6 if there are no interested parties.

OFFICE USE ONLY
CERTIFICATION OF FILING

Certificate Number:
2017-214792

Date Filed:
05/26/2017

Date Acknowledged:
05/30/2017

1 Name of business entity filing form, and the city, state and country of the business entity's place of business.

L&G Consulting Engineers, Inc.
Mercedes , TX United States

2 Name of governmental entity or state agency that is a party to the contract for which the form is being filed.

Hidalgo County

3 Provide the identification number used by the governmental entity or state agency to track or identify the contract, and provide a description of the services, goods, or other property to be provided under the contract.

C-17-103-05-30
Mile 6 from Mile 9 to Mile 11 project

4 Name of Interested Party	City, State, Country (place of business)	Nature of interest (check applicable)	
		Controlling	Intermediary
Sandoval , Armando	Mercedes , TX United States		X
Garza , Jacinto	Mercedes , TX United States	X	

5 Check only if there is NO Interested Party. ☐

6 AFFIDAVIT

I swear, or affirm, under penalty of perjury, that the above disclosure is true and correct.

_____
Signature of authorized agent of contracting business entity

AFFIX NOTARY STAMP / SEAL ABOVE

Sworn to and subscribed before me, by the said _____, this the _____ day of _____, 20_____, to certify which, witness my hand and seal of office.

_____ _____ _____
Signature of officer administering oath | Printed name of officer administering oath | Title of officer administering oath

CERTIFICATE OF INTERESTED PARTIES

FORM 1295

Complete Nos. 1 - 4 and 6 if there are interested parties.
Complete Nos. 1, 2, 3, 5, and 6 if there are no interested parties.

OFFICE USE ONLY
CERTIFICATION OF FILING

Certificate Number:
2017-214792

Date Filed:
05/26/2017

Date Acknowledged:

1 Name of business entity filing form, and the city, state and country of the business entity's place of business.

L&G Consulting Engineers, Inc.
Mercedes , TX United States

2 Name of governmental entity or state agency that is a party to the contract for which the form is being filed.

Hidalgo County

3 Provide the identification number used by the governmental entity or state agency to track or identify the contract, and provide a description of the services, goods, or other property to be provided under the contract.

C-17-103-05-30
Mile 6 from Mile 9 to Mile 11 project

4 Name of Interested Party	City, State, Country (place of business)	Nature of interest (check applicable)	
		Controlling	Intermediary
Sandoval , Armando	Mercedes , TX United States		X
Garza , Jacinto	Mercedes , TX United States	X	

5 Check only if there is NO Interested Party. ☐

6 AFFIDAVIT

I swear, or affirm, under penalty of perjury, that the above disclosure is true and correct.

MARIE CRUZ BUSTAMANTE
Notary Public, State of Texas
Comm. Expires 04-14-2021
Notary ID 126868488

Signature of authorized agent of contracting business entity

AFFIX NOTARY STAMP / SEAL ABOVE

Sworn to and subscribed before me, by the said Jacinto Garza, this the 26th day of May, 2017, to certify which, witness my hand and seal of office.

Signature of officer administering oath | Printed name of officer administering oath | Title of officer administering oath

Marie C Bustamante | Marie C. Bustamante | Exe. Adm

AI-59987 **Purchasing Department** **22. C. 5.**

CC - REGULAR

Meeting Date: 05/30/2017

Submitted For: David Fuentes, COMM. PCT. #1 **Submitted By:** Erica Espinosa, COMM. PCT. #1

Department: COMM. PCT. #1

Information

CAPTION

Pct. #1:
Requesting acceptance and approval of the following for 2GS, LLC dba Earthworks Enterprise for FEMA Road & Drainage Improvements: Mile 11 North, Mile 13 ½ & Yvette Circle under Contract C-16-398-12-13 including, but not limited to:
A. Certificate of Construction Completion as submitted and recommended by project engineer, LeFevre Engineering & Management Consulting, LLC reflecting the date of May 8, 2017;
B. Application for Payment No. 3 (Retainage Release) in the amount of $25,983.11.

BACKGROUND

FEMA Mile 11 North Rd. - PO # 757346, Mile 13 1/2 North Rd. - PO # 757345, Yvette Circle. - PO # 757524

Fiscal Impact

CALENDAR YEAR: **ACCT. #:**

FUNDS AVAILABLE Y/N?: Y **MATCHING FUNDS Y/N?:**

BUDGETARY IMPACT:

7-1280-431-11-121-81X-5-721
7-1200-431-11-121-819-5-721

CALENDAR YEAR: 2017 **ACCT. #:**

FUNDS AVAILABLE Y/N?: **MATCHING FUNDS Y/N?:**

BUDGETARY IMPACT:

Attachments

Payment App. (3) Release of Retainage
Certificate of Construction Completion

Form Review

Inbox	Reviewed By	Date
Purchasing - Internal	Marty Salazar	05/25/2017 05:18 PM
Budget & Management	Veronica Ortiz	05/26/2017 08:42 AM
Final Approval	Monica Salinas	05/26/2017 02:58 PM

Form Started By: Erica Espinosa Started On: 05/24/2017 03:04 PM

Final Approval Date: 05/26/2017

APPLICATION FOR PAYMENT NO. THREE (3) RELEASE OF RETAINGE

To: HIDALGO COUNTY (OWNER)
From: 2GS, LLC, dba Earthworks Enterprise (CONTRACTOR)
Contract: Hidalgo County Precinct #1

Project: FEMA Road and Drainage Imp.

Owner's Contract No. C-16-398-12-13 Engineer's Project No. PURCHASE ORDER #
For Work accomplished through the date of: May 7, 2017 757346, 757345, and 757524

1. Original Contract Price:			$ 519,662.30
2. Net change by Change Order and Written Agreements(+):			$ -
3. Current Contract Price (1 plus 2):			$ 519,662.30
4. Total completed and stored to date:			$ 519,662.30
5. Retainage (per Agreement):			
5%	of completed Work:	$ -	
	of stored material		
	Total Retainage:		$ -
6. Total completed and stored to date less retainage (4 minus 5)			$ 519,662.30
7. Less previous Application for Payments:			$ 493,679.19
8. AMOUNT DUE THIS APPLICATION (6 MINUS 7)			$ 25,983.11

Accompanying Documentation:

CONTRACTOR'S Certification:
The undersigned CONTRACTOR certifies that (1) all previous progress payments received from OWNER on account of Work done under the Contract referred to above have been applied on account to discharge CONTRACTOR'S legitimate obligations incurred in connection with Work covered by prior Applications for Payment numbered 1 through 3 inclusive: (2) title of all Work, materials and equipment incorporated in said Work or otherwise listed in or covered by this Application for Payment will pass to OWNER at time of payment free and clear of all Liens, security interests and encumbrances (except such as are covered by a Bond acceptable to OWNER indemnifying OWNER against any such Lien, security interest or encumbrance); and (3) all Work covered by this Application for Payments is in accordance with the Contract Documents and not defective.

Date May 22, 2017

2GS, LLC, dba Earthworks Enterprise
(CONTRACTOR)

By: _____
Humberto Garcia, Jr.
Member
P.O. Box 595
Peñitas, Texas 78576-0595

State of TEXAS
County of HIDALGO
Subscribed and sworn to before me this 22nd day of May 2017.

Notary Public: Armando Omar Flores, Jr.
My Commission expires: March 23, 2020.

ARMANDO OMAR FLORES JR
Notary Public, State of Texas
Comm. Expires 03-23-2020
Notary ID 130592795

Payment of the above AMOUNT DUE THIS APPLICATION is recommended.

Date 5-24-17

LeFevre Engineering & Management Consulting, LLC
(ENGINEER)

By: _____
LeFevre Engineering

Exhibit E-C

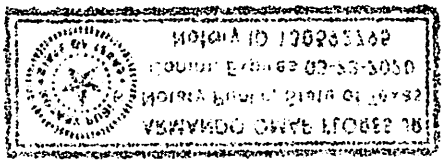

Estimate Quantity Update Worksheet

Colonia: **FEMA Road and Drainage Imp.**
Roadway: Mile 11 North, Mile 13 1/2 North, and Yvette Circle
Control:
Project No: **C-16-398-12-13**
County: HIDALGO COUNTY
Estimate: 3 Release of Retainage

Work Type: Road and Drainage Improvements
Limits:
From: Mile 11 North, Mile 13 1/2 North, and Yvette Circle
To:

Contractor: **2GS, LLC**
Contract Price: $519,662.30
Work Done this Mo.: $519,662.30
% Complete: 100.00%

Date Contract Began: February 20, 2017
Contract Time: 120
Time Charged: 77
% Time Used: 64.17%

						FIRST MONTH			SECOND MONTH				THIRD MONTH	
Item No.	DESCRIPTION	Unit	Project Quantity	Unit Price	Project Amount	Monthly Quantity	QTY to Date	Item Cost (Monthly)	Monthly Quantity	QTY to Date	Item Cost (Monthly)	Monthly Quantity	QTY to Date	Item Cost (Monthly)
	Mile 11 North Road													
1	Mobilization	LS	1	$3,000.00	$ 3,000.00	1.00	1.00	$ 3,000.00	-	1.00	$ -			
2	Traffic Control Plan signed and sealed by a professional engineer licensed in Texas	LS	1	2,500.00	2,500.00	1.00	1.00	2,500.00	-	1.00	-			
3	Excavate and haul away for reclamation 2" Deep Asphalt wear surface and 4" of Caliche Base. Note: Base is 4' wider than wear surface. Treat existing sub base with 2% lime and compact to achieve proposed sub base.	SY	7,627	2.75	20,974.25	7,627.00	7,627.00	20,974.25	-	7,627.00	-			
4	Install Biaxial Geogrid #1200 material over sub base.	SY	7,627	2.00	15,254.00	7,627.00	7,627.00	15,254.00	-	7,627.00	-			
5	Furnish and Install 6" deep compacted Caliche Base course. Note: This Base Course is 4' wider that the Asphalt Wear Course 2' wider on each side of the road to provide a stable shoulder.	SY	7,627	5.70	43,473.90	7,627.00	7,627.00	43,473.90	-	7,627.00	-			
6	Furnish and Apply a 1.5% Lime Treatment to the Caliche Base Material.	SY	7,627	1.00	7,627.00 -	7,627.00	7,627.00	7,627.00	-	7,627.00	-			
7	Furnish and Apply a Prime Coat (MC-30)(0.2 Gal/SY) Asphaltic Material on Caliche Base surface.	SY	6,454	0.80	5,163.20 -	-	-	-	6,454.00	6,454.00	5,163.20			
8	Furnish, Install and Roll a 2" deep HMAC Type "D" Asphalt wear surface.	SY	6,454	9.50	61,313.00 -	-	-	-	6,454.00	6,454.00	61,313.00			
9	Install pavement markings and lines.	SY	6,454	0.70	4,517.80	-	-	-	6,454.00	6,454.00	4,517.80			
10	Regrade Roadside Ditches	LF	5,280	2.00	10,560.00	5,280.00	5,280.00	10,560.00	-	5,280.00	-			
	Mile 11 North Road Total				**$ 174,383.15**			**$ 103,389.15**			$ 70,994.00			
	Mile 13 1/2 North Road													
1	Mobilization	LS	1	5,000.00	5,000.00	1.00	1.00	5,000.00	-	1.00	-			
2	Traffic Control Plan signed and sealed by a professional engineer licensed in Texas	LS	1	2,500.00	2,500.00	1.00	1.00	2,500.00	-	1.00	-			
3	Excavate and haul away for reclamation 2" Deep Asphalt wear surface and 4" of Caliche Base. Note: Base is 4' wider that wear surface. Treat existing sub base with 2% lime and compact to achieve proposed sub base.	SY	8,214	2.75	22,588.50	8,214.00	8,214.00	22,588.50	-	8,214.00	-			
4	Install Biaxial Geogrid #1200 material over sub base.	SY	8,214	2.00	16,428.00	-	-	-	8,214.00	8,214.00	16,428.00			
5	Furnish and Install 6" deep compacted Caliche Base course. Note: This Base Course is 4' wider than the Asphalt Wear Course 2' wider on each side of the road to provide a stable shoulder.	SY	8,214	5.60	45,998.40	-	-	-	8,214.00	8,214.00	45,998.40			
6	Furnish and Apply a 1.5% Lime Treatment to the Caliche Base Material.	SY	8,214	1.00	8,214.00	8,214.00	8,214.00	8,214.00	-	8,214.00	-			
7	Furnish and Apply a Prime Coat (MC-30)(0.2 Gal/SY) Asphaltic Material on Caliche Base surface.	SY	7,040	0.80	5,632.00	-	-	-	7,040.00	7,040.00	5,632.00			
8	Furnish, Install and Roll a 2" deep HMAC Type "D" Asphalt wear surface.	SY	7,040	9.50	66,880.00	-	-	-	7,040.00	7,040.00	66,880.00			
9	Install pavement markings and lines.	SY	7,040	0.65	4,576.00	-	-	-	7,040.00	7,040.00	4,576.00			
10	Regrade Roadside Ditches	LF	5,280	2.00	10,560.00	5,280.00	5,280.00	10,560.00	-	5,280.00	-			
	Mile 13 1/2 North Road Total				**$ 188,376.90**			**$ 48,862.50**			$ 139,514.40			

	Yvette Circle														
1	Mobilization	LS	1	2,000.00	2,000.00	1.00	1.00	2,000.00	-	1.00	-				
2	Traffic Control Plan signed and sealed by a professional engineer	LS	1	2,500.00	2,500.00	1.00	1.00	2,500.00	-	1.00	-				
	licensed in Texas.														
3	Excavate and haul away for reclamation 2" Deep Asphalt wear	SY	7,007	2.75	19,269.25	7,007.00	7,007.00	19,269.25	-	7,007.00	-				
	surface and 4" of Caliche Base. Note: Base is 4' wider than wear														
	surface. Treat existing sub base with 2% lime and compacted to														
	achieve proposed sub base.														
4	Install Biaxial Geogrid #1200 material over sub base.	SY	7,007	2.00	14,014.00	-	-	-	7,007.00	7,007.00	14,014.00				
5	Furnish and Install 6" deep compacted Caliche Base course.	SY	7,007	5.70	39,939.90	-	-	-	7,007.00	7,007.00	39,939.90				
	Note: This Base Course is 4' wider than the Asphalt Wear Course														
	2' wider on each side of the road to provide a stable shoulder.														
6	Furnish and Apply a 1.5% Lime Treatment to the Caliche Base	SY	7,007	1.00	7,007.00	7,007.00	7,007.00	7,007.00	-	7,007.00	-				
	Material.														
7	Furnish and Apply a Prime Coat (MC-30)(0.2 Gal/SY) Asphaltic	SY	7,007	0.80	5,605.60	-	-	-	7,007.00	7,007.00	5,605.60				
	Material on Caliche Base surface.														
8	Furnish, Install and Roll a 2" deep HMAC Type "D" Asphalt wear	SY	7,007	9.50	66,566.50	-	-	-	7,007.00	7,007.00	66,566.50				
	surface.														
	Yvette Circle Total				**$ 156,902.25**			**$ 30,776.25**			**$ 126,126.00**			**$ -**	
	GRAND TOTAL				**$ 519,662.30**			**$ 183,027.90**			**$ 336,634.40**			**$ -**	

Monthly Totals:	$ 183,027.90	$ 336,634.40	$ -
Base Bid	$ 183,027.90	$ 336,634.40	$ -
Change Order			

Total to Date:

Base Bid	$ 519,662.30
Change Order	$ -
Total	$ 519,662.30

Prepared and Checked By:

Signature: _____ Date: May 22, 2017

Printed Name: Humberto Garcia Jr.

Engineer: _____ ✓

2GS, LLC, dba Earthworks Enterprise	Contractor Name	Application No.:	3 (Release of Retainage)
February 20, 2017	Starting Date	Application Date:	May 22, 2017
June 20, 2017	Project Ending Date	Period To:	May 7, 2017
5%	Retainage Percent	Engineer Firm:	LeFevre Engineering & Management Consulting, LLC

Summary

CSJ #	Project Name	Original Schedule	Revised Schedule Value	Payment Application #1	Payment Application #2	Payment Application #3	Total To Date	Balance To Finish	Retainage	Net	Payment To Date	Payment Due
C-16-398-12-13	FEMA Road and Drainage Imp.	$ 519,662.30	$ -	$ 183,027.90	$ 336,634.40	$ -	$ 519,662.30	-$ 0.00	$ -	$ 519,662.30	$ 493,679.19	$ 25,983.11
Totals			$ 519,662.30	$ 183,027.90	$ 336,634.40	$ -	$ 519,662.30	$ (0.00)	$ -	$ 519,662.30	$ 493,679.19	$ 25,983.11

Exhibit E-D

CERTIFICATE OF CONSTRUCTION COMPETION

THIS IS TO CERTIFY THAT ON 8th DAY OF May ,2017 A FINAL INSPECTION was made of the project herein described.

CONTRACT

CONTRACT DATE: December 13, 2016
OWNER: Hidalgo County
CONSTRUCTION CONTRACTOR: 2GS, LLC, Dba Earthworks Enterprise
OF THE CITY OF Peñitas STATE OF Texas

PROJECT DESCRIPTION

CONSTRUCTION OF FEMA Road and Drainage Improvements

CONTRACT NO: C-16-398-12-13
Located in or near the City/Precinct Of Weslaco/Hidalgo

THIS IS TO CERTIFY"

1. That the work has been completed in accordance with the plans and specifications and all addenda, change orders, supplemental agreements thereto, and with the following exceptions:
   None

2. That the sum of $0.00, deducted from the final payment of the Contractor is a fair and equitable settlement for the foregoing except work.

3. That the contractor has presented a "Certificate of Release" starting under oath, that all claims arising out of the performance of work have been fulfilled, and the Owner is released from all claims arising under or by virtue of said contract.

4. That the CONTRACTOR has presented in behalf of itself and its sureties, satisfactory evidence that it is bound to repair, replace, and make good any faulty workmanship and/or materials discovered in the work within a period of one year from this date, as provided in said contract.

5.

Amount of Original Contract	$519,662.30
Present Amount of Contract	519,662.30
Total Amount of earned to Date	519,662.30
Less: previous payments	493,679.19
Balance	25,983.11
Authorized deductions	0.00
AMOUNTY OF FINAL PAYMENT	25,983.11

Exhibit E-M

6. That the final payment in the amount of Twenty-Five Thousand Nine Hundred Eighty-Three Dollars and Zero Cents is now due and payable.

Engineer's Signature & License #

CONCURRED BY:

2GS, LLC, Dba Earthworks Enterprise
Contractor's Name

By: Humberto García, Jr.

Title: Member

CONCURRED BY:

Hidalgo County Pct. 1
City/Precinct

By: David

Title: Chief Administrator

Exhibit E-M

AI-60041 **Purchasing Department** **22. C. 6.**

CC - REGULAR

Meeting Date: 05/30/2017

Submitted For: David Fuentes, COMM. PCT. #1

Submitted By: Amy Saenz-Smith, COMM. PCT. #1

Department: COMM. PCT. #1

Information

CAPTION

PCT 1

A. Requesting approval of Interlocal Cooperation Agreement between The City of Weslaco, Texas and Hidalgo County, Texas concerning Phase I and Phase II Improvements to Mile 6 West Road from Mile 9 North to Mile 11 North **[Phase I** project development activities to the Road consists of the Environmental Assessment, Public Involvement and Schematic Services and **Phase II** shall include Field Surveys, Right-of-Way Map, Plans, Specification & Estimates, Roadway Right-of-Way Acquisition/ Compensable Utility Services];

B. In accordance with Texas Government Code §791.014, Hidalgo County, Texas, acting by and through the Hidalgo County Commissioners Court, has been advised of a proposed project of a desire to widen and reconstruct Mile 6 West between Mile 9 and Mile 11 through a Phase II Inter-local Cooperation Agreement to be entered into with the City of Weslaco, Texas, and Hidalgo County.

BACKGROUND

TXDOT
Mile 6 West Road from Mile 9 North to Mile 11 North.
Pending Legal approval and fully executed documents.
TXDOT approval email attached

Fiscal Impact

CALENDAR YEAR: 2017 **ACCT. #:** 7-1315-431-00-121-039-0-XXX

FUNDS AVAILABLE Y/N?: Y **MATCHING FUNDS Y/N?:**

BUDGETARY IMPACT:

80% TXDOT/10% City of Weslaco/10% County of Hidalgo
7-1315-126-30-000-010-0-000 TXDOT PRJ-DUE FR WESLACO-MILE 6 WEST
7-1315-126-20-000-012-0-000 TXDOT PRJ-DUE FR TXDOT-M6W

1st payment shall be upon execution of the agreement $755,008.37

Attachments

TXDOT Approval Email Mile 6
agreement

exh
ICA
legal

Form Review

Inbox	Reviewed By	Date
Purchasing - Internal	Marty Salazar	05/26/2017 11:38 AM
Budget & Management	Veronica Ortiz	05/26/2017 11:41 AM
Ivan Cantu	Ivan Cantu	05/26/2017 01:45 PM
Final Approval	Monica Salinas	05/26/2017 02:58 PM
Form Started By: Amy Saenz-Smith		Started On: 05/26/2017 10:32 AM
Final Approval Date: 05/26/2017		

RE: Mile 6 Work Authorization approval

From : Mike Miranda <Mike.Miranda@txdot.gov> Fri, May 26, 2017 10:17 AM

Subject : RE: Mile 6 Work Authorization approval 1 attachment

To : Jorge L. Pena <jorge.pena1@co.hidalgo.tx.us>

Cc : Amy Smith-Saenz <amy.saenz-smith@co.hidalgo.tx.us>, David Suarez <david.suarez@co.hidalgo.tx.us>, Rey Salazar <rey.salazar@co.hidalgo.tx.us>, Rolando Garcia <rolando.garcia@co.hidalgo.tx.us>, Norma Garza <Norma.Garza@txdot.gov>, Martha Salazar <martha.salazar@co.hidalgo.tx.us>, Darlene H. Betancourt <darlene.betancourt@co.hidalgo.tx.us>

Good morning, Jorge:

I received final confirmation this morning from our ROW Section. TxDOT has completed the courtesy review of the work authorization and it is acceptable. The attached email from Norma to Darlene Betancourt serves as further confirmation.

Please contact me if you have questions.

Respectfully,
Mike

--

Mike Miranda, P.E., PTOE
Project Manager
Advanced Project Development
Pharr District Office
(956) 702-6116

-----Original Message-----
From: Jorge L. Pena [mailto:jorge.pena1@co.hidalgo.tx.us]
Sent: Friday, May 26, 2017 9:42 AM
To: Mike Miranda
Cc: Amy Smith-Saenz; David Suarez; Rey Salazar; Rolando Garcia; Norma Garza; Martha Salazar; Darlene H. Betancourt
Subject: Mile 6 Work Authorization approval

Mike,

Good morning, as discussed previously, you've verbally approved the work authorization for Right of Way acquisition as it pertains to the Mile 6 project. Attached is Exhibit B with the revision so that you may replace in its entirety. We look forward to Tx-DOT correspondence and thank you for all the assistance.

Best regards,

Jorge Pena

----- Original Message -----
From: "Jorge L. Pena" <jorge.pena1@co.hidalgo.tx.us>
To: "Mike Miranda" <mike.miranda@txdot.gov>
Sent: Wednesday, May 24, 2017 6:47:05 PM
Subject: Requested info

Mike,

As requested, attached are the documents needed. Please contact me if you have additional question.

Thank you,

Jorge Peña

Sent from my iPhone
[Connecting Texans to what matters most. Texas Department of Transportation: 1917-2017 #txdot100]
<http://www.dot.state.tx.us/txdot100/>

From : Norma Garza <Norma.Garza@txdot.gov> Fri, May 26, 2017 10:02 AM
Subject : FW: Mile 6 Project
To : Mike Miranda <Mike.Miranda@txdot.gov>

FYI

From: Norma Garza
Sent: Thursday, May 25, 2017 10:25 AM
To: Darlene H. Betancourt
Cc: Amy Saenz-Smith; Jorge Peña; Rey Salazar; Dina Trevino; Yvette Salinas
Subject: Re: Mile 6 Project

Darlene,
My staff and I are currently in route to Laredo for a training and will not be back to the office until tomorrow.

But, as we discuss we are providing a review to verify that the acquisition consultant is following the proper requirements and regulations. We have completed our review, and it is acceptable. The executed AFA is to reimburse the County for the land acquisition and associated fees, not the acquisition services by L&G.

Let me know if you have any other questions.

Norma Y. Garza, P.E.
Advance Planning/ Project Management Supervisor
District RMA Coordinator
TxDOT- Pharr District
Telephone: (956) 702-6180
Mobile: (956) 638- 3518
Email: Norma.Garza@txdot.gov

Sent from my iPhone

On May 25, 2017, at 9:24 AM, Darlene H. Betancourt <darlene.betancourt@co.hidalgo.tx.us> wrote:

> Good Morning Norma,
>
> To recap our telephone conversation, late afternoon yesterday regarding the status of the L & G Consulting Engineering Work Authorization for above-referenced project, whereby you advised TXDOT review has been completed and approved in order to allow the County to proceed with our routine protocols regarding these matters.
>
> As you explained, the portion to be reimbursed by TXDOT to Hidalgo County will be the acquisition of the right of way, and not the Professional Services as related to this particular phase of the project.
>
> Upon submitting final written approval, may you provide a copy to our office for your files.

Thank you once again for your continued cooperation with Hidalgo County and have a great week.

Darlene H. Betancourt, CPPB
Hidalgo County Purchasing Department
2812 S. Business Hwy. 281
Edinburg, TX. 78541
956-292-7000 x-4852

STATE OF TEXAS §
§
COUNTY OF HIDALGO §

INTERLOCAL COOPERATION AGREEMENT BETWEEN THE CITY OF WESLACO, TEXAS, AND HIDALGO COUNTY, TEXAS CONCERNING CERTAIN PHASE I AND PHASE II IMPROVEMENTS TO MILE 6 WEST ROAD FROM MILE 9 NORTH TO MILE 11 NORTH.

THIS agreement is made on this _____ day of _____, 2017 by and between the City of Weslaco, Texas, hereinafter referred to as "CITY", and the County of Hidalgo, Texas, hereinafter referred to as "COUNTY" pursuant to the provisions of the Texas Interlocal Cooperation Act, as follows:

WITNESSETH:

WHEREAS, both the CITY and COUNTY executed an Interlocal Cooperation Agreement on the 6th day of August, 2013 (the August 6, 2013 Agreement) for the Phase I project development activities to the Road as hereinafter defined to have been completed;

WHEREAS, the Phase I project development activities to the Road consists of the Environmental Assessment, Public Involvement and Schematic Services;

WHEREAS, the terms and conditions of this Agreement to the extent it conflicts with the August 6, 2013 Agreement shall be controlled by this Interlocal Cooperation Agreement;

WHEREAS, CITY is a home rule municipality located in Hidalgo County, Texas;

WHEREAS, COUNTY is a county in the State of Texas;

WHEREAS, CITY and COUNTY, each pursuant to its statutory and constitutional authority, are responsible for maintenance and improvements of certain public roadways within their boundaries;

WHEREAS, Mile 6 West (Westgate Drive) is an important and critical integral infrastructure connecting link corridor within the City of Weslaco and Hidalgo County;

WHEREAS, Texas Department of Transportation ("TxDOT"), Hidalgo County Metropolitan Planning Organization (HCMPO), CITY and COUNTY have identified the need to widen and reconstruct Mile 6 West (Westgate Drive) from Mile 9 North to Mile 11 North from an existing two-lane rural roadway to a four-lane urban roadway (the "Road");

WHEREAS, TxDOT, HCMPO, CITY and COUNTY have allocated Federal, State and local funds to fully fund engineering, environmental, survey, the acquisition of right of way, adjustment of utilities and construction of the Road;

WHEREAS, COUNTY will be the fiduciary agent for this project and assume the role of project development lead;

WHEREAS, COUNTY and CITY desires to complete the remaining project development activities in Phase II and III for this project as follows:

- Phase II – shall include Field Surveys, Right-of-Way Map, Plans, Specification & Estimates, Roadway Right-of-Way Acquisition / Compensable Utility Services; and

- Phase III – shall include Outfall Right-of-Way Acquisition / Compensable Utility Services and Construction Management Services including but not limited to Construction Inspection / Construction Material Testing;

WHEREAS, COUNTY desires to complete Phase II of the project development in this Agreement:

WHEREAS, the segment of the Road from Mile 9 to Mile 10 is within the current corporate limits of the CITY, while the segment North from Mile 10 to Mile 11 is within the Extraterritorial Jurisdiction (ETJ) of the CITY and within COUNTY jurisdiction as outlined in Exhibit A;

WHEREAS, the Road serves as a connecting link and as an integral part of the county road system and such road improvements are in the best interest of the COUNTY and CITY;

WHEREAS, the CITY and COUNTY desire to equally share the total estimated project development costs;

WHEREAS, the estimated total Phase I & II projects development costs will be $ 4,087,482.80 as identified in Exhibit B;

WHEREAS, the CITY's estimated share is $2,043,741.40 for Phase I & II of which the CITY has already contributed $187,991.63 leaving a balance of $1,855,749.77;

WHEREAS, the CITY desires to cooperate by contributing $755,008.37 upon execution of this agreement, $ 347,000 in October 2017, $416,000 in October 2018 and $337,741.40 in October 2019. Any over runs and/or under runs will be shared equally between the CITY and COUNTY for this Phase I & II development costs;

WHEREAS, the COUNTY's estimated share is $2,043,741.40 for Phase I & II project development costs;

WHEREAS, CITY and COUNTY are authorized to enter into this Agreement pursuant to the Interlocal Cooperation Act, Texas Government Code 791.001 et. Seq. which authorizes local governments to contract with each other to perform governmental functions and services under the terms of the Act;

NOW, THEREFORE, CITY and COUNTY, in consideration of the mutual covenants expressed hereinafter, agree as follows:

1. COUNTY and CITY desire to complete Phase II of this project development in this Agreement consisting of and including:

   - Field Surveys, Right-of-Way Map, Plans, Specification & Estimates, Roadway Right-of-Way Acquisition/ Compensable Utility Services.

2. The Road serves as a connecting link and is an integral part of the county road system and such road improvements are in the best interest of the COUNTY and CITY.

3. The CITY and COUNTY desire to equally share the total estimated project development cost.

4. The estimated total Phase I & II projects development cost is $ 4,087,482.80 as identified in Exhibit B.

5. The CITY's estimated share of Phase I & II project development cost is $2,043,741.40 of which the CITY has already contributed $187,991.63 leaving a balance of $1,855,749.77.

6. The CITY shall pay the COUNTY the sum of $755,008.37 upon execution of this Agreement, $347,000 in October 2017, $416,000 in October 2018 and $337,741.40 in October 2019. Any over runs and/or under runs will be shared equally between the CITY and COUNTY for this Phase I & II development costs;

7. The COUNTY's estimated share is $2,043,741.40 for Phase I & II project development costs.

8. To the extent the terms and conditions of the Agreement conflict with the terms and conditions of the August 6, 2013 Agreement, the terms of this Agreement shall control.

9. Each party agrees to conform to its own applicable purchasing laws, regulations, policies, and procedures with respect to the portion of the work under this Agreement performed by each party.

10. Conflict of Applicable Law: Nothing in this Agreement shall be construed so as to require the commission of any act contrary to law, and whenever there is any conflict between any provision of this Agreement and any present or future law, ordinance, or administrative, executive or judicial regulation, order or decree, or amendment thereof, contrary to which the parties have no legal right to contract, the latter shall prevail, but in such event the affected provision or provisions of the Agreement shall be modified only to the extent necessary to bring them within the legal requirements and only during the time such conflict exists.

11. No Waiver: No waiver by any party hereto of any breach of any provision of the Agreement shall be deemed to be a waiver of any preceding of succeeding breach of the same or any other provision hereof.

12. Entire Agreement: This Agreement contains the entire contract between the parties hereto and each party acknowledges that neither has made (either directly or through any agreement or representative) and representation or agreement in connection with this Agreement not specifically set forth herein. This Agreement may be modified or amended only by agreement in writing executed by Mission, McAllen and County, and not otherwise.

13. TEXAS LAW TO APPLY: THIS AGREEMENT SHALL BE CONSTRUED UNDER AND IN ACCORDANCE WITH THE LAWS OF THE STATE OF TEXAS, AND ALL OBLIGATIONS OF THE PARTIES CREATED HEREUNDER ARE PERFORMABLE IN HIDALGO COUNTY, TEXAS. THE PARTIES HEREBY CONSENT TO PERSONAL JURISDICTION IN HIDALGO COUNTY, TEXAS.

14. Notice: Except as maybe otherwise specifically provided in this Agreement, all notices, demands, requests or communication required or permitted hereunder shall be in writing and shall either be (i) personally delivered against a written receipt, or (ii) sent by registered or certified mail, return receipt requested, postage prepaid and addressed to the parties at the addresses set forth below, or at such other addresses as may have been theretofore specified by written notice delivered in accordance herewith:

If to Weslaco: City of Weslaco
Attention: David Suarez, Mayor
225 S. Kansas Ave.
Weslaco, Texas 78596

If to County: Hidalgo County, Texas
Attn: Honorable Ramon Garcia, Hidalgo County Judge
P. O. Box 758
Edinburg, Texas 78540-0758

Copies to: David Fuentes, Commissioner, Precinct No. 1
1902 Joe Stephens Ave.
Weslaco, Texas 78596

15. Each notice, demand, request or communication which shall be delivered or mailed in the manner described above shall be deemed sufficiently given for all purposes at such time as it is personally delivered to the addressee, or, if mailed, at such time as it is deposited in the United States mail.

16. Additional Documents: The parties hereto covenant and agree that they will execute such other and further instruments and documents as are or may become necessary or convenient to effectuate and carry out the terms of this agreement.

17. Successors: This Agreement shall be binding upon and inure to the benefit of the parties hereto and their respective heirs, executors, administrators, legal representatives, successors, and assigns where permitted by this Agreement.

18. Assignment: This Agreement shall not be assignable.

19. Headings: The headings and captions contained in this Agreement are solely for the convenience reference and shall not be deemed to affect the meaning or interpretation of any provision of paragraph hereof.

20. Gender and Number: All pronouns used in this Agreement shall include the other gender, whether used in the masculine, feminine or neuter gender, and singular shall include the plural whenever and as often as may be appropriate.

21. Authority to Execute: The execution and performance of this Agreement by the Mission, McAllen and County have been duly authorized by all necessary laws, resolutions or corporate action, and this Agreement constitutes the valid and enforceable obligations of the Cities and County in accordance with its terms.

22. Governmental Purpose: Each party hereto is entering into the agreement for the purpose of providing for governmental services or functions and will pay for such services out of current revenues available to the paying party as herein provided.

23. Commitment or Current Revenues Only: In the event that during any term hereof; the governing body of any party does not appropriate sufficient funds to meet the obligations of such party under this Agreement, then any party may terminate this Agreement upon ninety (90) days written notice to the other party. Each of the parties hereto agrees, however, to use its best efforts to secure funds necessary for the continued performance of this Agreement. The parties intend this provision to be a continuing right to terminate this Agreement at the expiration of each budget period of each party hereto pursuant to the provisions of Tex. Loc. Govt. Code Ann. §271.903.

24. Following completion of construction of the Road each party hereto shall maintain the road within their respective jurisdictions where applicable.

WITNESS THE HANDS OF THE PARTIES effective as of the day and year first written above.

CITY OF WESLACO

By: _____
David Suarez, Mayor

ATTEST:

_____ WCC 05/16/17
City Secretary

COUNTY OF HIDALGO

By: _____
Ramon Garcia, County Judge

ATTEST:

_____
County Clerk

APPROVED AS TO FORM:

By: _____
Juan Gonzales
Weslaco City Attorney

APPROVED AS TO FORM:
Atlas, Hall & Rodriguez, L.L.P.

By: _____
Stephen L. Crain

STATE OF TEXAS §
§
COUNTY OF HIDALGO §

APPROVAL OF
INTERLOCAL COOPERATION AGREEMENT
PROJECT

In accordance with Texas Government Code §791.014, Hidalgo County, Texas, acting by and through the Hidalgo County Commissioners Court, has been advised of a proposed project to desire to widen and reconstruct Mile 6 West between Mile 9 and Mile 11 through a Phase II Interlocal Cooperation Agreement to be entered into with the City of Weslaco, Texas, and Hidalgo County.

By vote on_____ 2017, the Hidalgo County Commissioners Court has approved the Project identified above.

_____
By: Ramon Garcia, County Judge

ATTEST:

_____
Arturo Guajardo, County Clerk

APPROVED AS TO FORM:

Atlas, Hall & Rodriguez, L.L.P.

By: _____
Stephen L. Crain

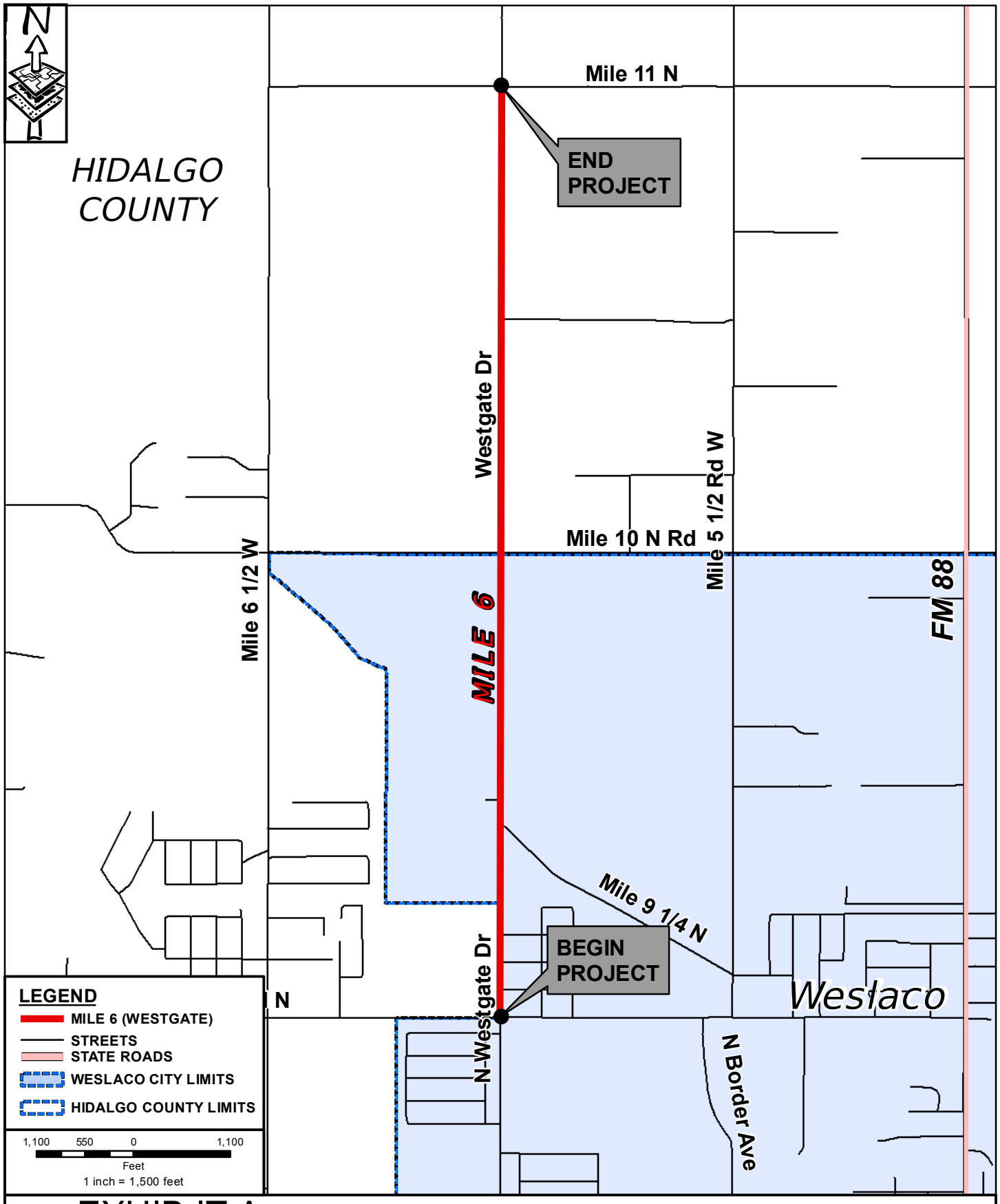

EXHIBIT A

MILE 6 (WESTGATE) LOCATION MAP

FROM MILE 9 TO MILE 11

APPROX. TOTAL PROJECT LENGTH 2.0 MILES

EXHIBIT "B"

MILE 6 ESTIMATED PROJECT COSTS

ROADWAY PROJECT:	**MILE 6**
LIMITS:	from Mile 9 to Mile 11
EXISTING ROADWAY SECTION:	2 - Lane Rural
EXISTING ROW WIDTH:	65' to 80' Varies
PROPOSED ROADWAY SECTION:	4-Lane Divided Roadway
PROPOSED ROW WIDTH:	104-ft
ESTIMATED CONSTRUCTION COST ...(82' F-F URBAN ROADWAY ONLY)	**$9,900,000.00**
ESTIMATED CONSTRUCTION COST ..(CLEAN 2 EXISTING OUTFALLS (1320-lf each)	$ 528,000.00
ESTIMATED CONSTRUCTION COST ...(2-8X8 Conc Irrigation Structure w/bypass)	$ 500,000.00
ESTIMATED CONSTRUCTION COST ...(1-8x8 Conc Irrigation structure w/bypass)	$ 300,000.00
LENGTH FOR 4-LANE ROADWAY	2.2 Miles

ESTIMATED PROJECT COSTS	***ESTIMATED % LPA COST SHARE***	***TOTAL ESTIMATED PROJECT COST***	***TOTAL ESTIMATED LPA COST***
PHASE I - AS PER APPROVED AGREEMENT - (DATED AUGUST 6, 2013)			
PHASE I - EA, PUBLIC INVOLVEMENT & SCHEMATIC DESIGN			
Determ. of Local Costs vs State Cost/Feas. Study and Agrmt./ AFA w/ TxDOT/LPA coord. Etc	100%		$ -
Environmental Document with TxDOT	100%		$ -
Public Involvement for the project with stakeholders and 1 Public Meeting	100%		$ -
Archeological and Historical Research	100%		$ -
Engineering Technical Support at Public Mtgs with Layouts etc	100%		$ -
Schematic for Roadway & siphons	100%		$ -
Traffic Signal Warrants (2 Locations)	100%		$ -
Hydrological Map for 3 Outfall Drain Ditches outfalls & capacities	100%		$ -
Office Surveys for Schem. (Prel. Owner Ident. and Comp. Property Rights) RDWY & Outfalls	100%		$ -
Update Schem. based on comments as provide by TxDOT/FHWA and EA update w/ FHWA	100%		$ -
Engineering Technical Support to address Public Hearing with Layouts etc	100%		$ -
Either address the Public or hold 1 Public Hearing	100%		$ -
PHASE I SUB-TOTAL (TEDSI WORK AUTH. NO. 2 PAID TO TEDSI & APPROVED BY TXDOT)		**$ 407,281.98**	**$ 81,456.40**
PHASE II - INTERLOCAL COOPERATION AGREEMENT			
PHASE II - ROW Map, Surveys, PS&E , ROW Acquisition, Utility Management			
TEDSI WORK AUTH. NO. 3 (Not approved by TxDOT) (LPA Cost is amount of money paid to date)	**66%**	**$ 1,515,115.00**	**$ 1,046,740.00**
TEDSI WORK AUTH. NO. 4 (Approved by TxDOT & WA Cancelled by Pct. No. 1) (LPA Cost is amount of money paid to date)	**59%**	**$ 628,961.20**	**$ 373,434.00**
Additional Costs to Complete ROW Map (Estimated 68 Parcels)	100%	$ -	$ -
* Additional Costs of Re-Evaluation of the Environmental Assessment to include Outfalls in Project Construction	100%	$ 15,000.00	$ 15,000.00
Additional Costs to Complete Field Surveys for Design and Construction OF ROADWAY	100%	$ 49,500.00	$ 49,500.00
Additional Costs to Complete Field Surveys for Design and Construction OF OUTFALLS	100%	$ 10,000.00	$ 10,000.00
Additional Costs to Complete PS&E Development Roadway (8% Engineering Fee)	100%	$ 359,296.00	$ 359,296.00
Additional Costs to Complete Sub-Surface Utility Engineering (SUE) 25 pot holes/mile	100%	$ 13,750.00	$ 13,750.00
Additional Costs to Complete Permanent Signal Designs (Mile 9, Mile 10, Mile 11)	100%	$ 36,000.00	$ 36,000.00
Additional Costs to Complete Temporary Signal Designs during Construction	100%	$ 18,000.00	$ 18,000.00
Additional Costs for Engineering Fee to Create 1 set of Plans and Submit through TxDOT	100%	$ 66,000.00	$ 66,000.00
Additional Costs to Complete Permitted Utilities Coordination to adjust	100%	$ 108,000.00	$ 108,000.00
Additional Costs to Complete Right-of-Way Costs - Acquisition Services (est. 68 Parcels) FOR ROADWAY	100%	$ 844,560.00	$ 844,560.00
Est. Comp. Utility Mgmt for Acq. of Property Rights and Compensate for Utility Adjust(s) FOR ROADWAY	100%	$ 94,500.00	$ 94,500.00
SUB-TOTAL			**$ 3,034,780.00**
Prel. Engineering Direct State Costs for State Review and Oversight (Est. 1.2% of Constr.)	100%	$ 134,736.00	$ 134,736.00
Est. County Attorney Costs for Condemnation ($15,000/Parcel based on 20% total of parcels)	100%	$ 204,000.00	$ 204,000.00
Right-of-Way State Division Review and Oversight (1.5% of combined const. and ROW costs)	100%	$ 200,798.40	$ 200,798.40
Est. Roadway Right-of-Way Costs (EST. (20-ft add'l on each side for 2.2 miles @ $4.0/ sq ft)	20%	$ 1,858,560.00	$ 371,712.00
COMPENSABLE UTILITY COSTS	20%	$ 300,000.00	$ 60,000.00
PHASE II SUB-TOTAL		**$ 6,456,776.60**	**$ 4,006,026.40**
PHASE III - FOR INFORMATION PURPOSES ONLY			
PHASE III - Construction Oversight			
* Additional Costs to Complete Right-of-Way Costs - Acquisition Services (est. 7 Parcels) FOR OUTFALLS	100%	$ 96,600.00	$ 96,600.00
* Est. Compensable Utility Management for Acquisition of Property Rights and Compensate for Utility Adjust(s) FOR OUTFALLS	100%	$ 100,000.00	$ 100,000.00
Eng Consultant Construction Management (18 Months)	100%	$ 151,200.00	$ 151,200.00
ROADWAY plus OUTFALLS AND SIPHONS CONSTRUCTION COST	1.4%	$ 11,228,000.00	$ 157,192.00
TxDOT/LPA Construction Inspection (11% of construction)	1.4%	$ 1,235,080.00	$ 17,291.12
PHASE III SUB-TOTAL		**$ 12,810,880.00**	**$ 522,283.12**
ESTIMATED TOTAL		**$ 19,674,938.58**	**$ 4,609,765.92**

WORK COMPLETE

LPA - Local Public Agency

TOTAL ESTIMATED LPA COST.....	**$ 4,609,765.92**
COMBINED TOTAL ESTIMATED PROJECT COST.....	**$ 19,674,938.58**
ESTIMATED LPA COSTS NOT INCLUDED IN WORK AUTHORIZATION(S).....	**$ 1,145,729.52**
LPA PROJECT COST IN PERCENTAGE COMPARED TO TOTAL COST.....	**23%**

MILE 6 PHASE II - LPA PARTICIPATION COSTS

ESTIMATED CITY OF WESLACO PARTICIPATION COST FOR PHASE I & II OF THIS PROJECT	**$ 2,043,741.40**
ESTIMATED COUNTY PARTICIPATIONN COST FOR PHASE I & II OF THIS PROJECT	**$ 2,043,741.40**

STATE OF TEXAS §
§
COUNTY OF HIDALGO §

INTERLOCAL COOPERATION AGREEMENT BETWEEN THE CITY OF WESLACO, TEXAS, AND HIDALGO COUNTY, TEXAS CONCERNING CERTAIN PHASE I AND PHASE II IMPROVEMENTS TO MILE 6 WEST ROAD FROM MILE 9 NORTH TO MILE 11 NORTH.

THIS agreement is made on this _____ day of _____, 2017 by and between the City of Weslaco, Texas, hereinafter referred to as "CITY", and the County of Hidalgo, Texas, hereinafter referred to as "COUNTY" pursuant to the provisions of the Texas Interlocal Cooperation Act, as follows:

WITNESSETH:

WHEREAS, both the CITY and COUNTY executed an Interlocal Cooperation Agreement on the 6th day of August, 2013 (the August 6, 2013 Agreement) for the Phase I project development activities to the Road as hereinafter defined to have been completed;

WHEREAS, the Phase I project development activities to the Road consists of the Environmental Assessment, Public Involvement and Schematic Services;

WHEREAS, the terms and conditions of this Agreement to the extent it conflicts with the August 6, 2013 Agreement shall be controlled by this Interlocal Cooperation Agreement;

WHEREAS, CITY is a home rule municipality located in Hidalgo County, Texas;

WHEREAS, COUNTY is a county in the State of Texas;

WHEREAS, CITY and COUNTY, each pursuant to its statutory and constitutional authority, are responsible for maintenance and improvements of certain public roadways within their boundaries;

WHEREAS, Mile 6 West (Westgate Drive) is an important and critical integral infrastructure connecting link corridor within the City of Weslaco and Hidalgo County;

WHEREAS, Texas Department of Transportation ("TxDOT"), Hidalgo County Metropolitan Planning Organization (HCMPO), CITY and COUNTY have identified the need to widen and reconstruct Mile 6 West (Westgate Drive) from Mile 9 North to Mile 11 North from an existing two-lane rural roadway to a four-lane urban roadway (the "Road");

WHEREAS, TxDOT, HCMPO, CITY and COUNTY have allocated Federal, State and local funds to fully fund engineering, environmental, survey, the acquisition of right of way, adjustment of utilities and construction of the Road;

WHEREAS, COUNTY will be the fiduciary agent for this project and assume the role of project development lead;

WHEREAS, COUNTY and CITY desires to complete the remaining project development activities in Phase II and III for this project as follows:

- Phase II – shall include Field Surveys, Right-of-Way Map, Plans, Specification & Estimates, Roadway Right-of-Way Acquisition / Compensable Utility Services; and

- Phase III – shall include Outfall Right-of-Way Acquisition / Compensable Utility Services and Construction Management Services including but not limited to Construction Inspection / Construction Material Testing;

WHEREAS, COUNTY desires to complete Phase II of the project development in this Agreement:

WHEREAS, the segment of the Road from Mile 9 to Mile 10 is within the current corporate limits of the CITY, while the segment North from Mile 10 to Mile 11 is within the Extraterritorial Jurisdiction (ETJ) of the CITY and within COUNTY jurisdiction as outlined in Exhibit A;

WHEREAS, the Road serves as a connecting link and as an integral part of the county road system and such road improvements are in the best interest of the COUNTY and CITY;

WHEREAS, the CITY and COUNTY desire to equally share the total estimated project development costs;

WHEREAS, the estimated total Phase I & II projects development costs will be $ 4,087,482.80 as identified in Exhibit B;

WHEREAS, the CITY's estimated share is $2,043,741.40 for Phase I & II of which the CITY has already contributed $187,991.63 leaving a balance of $1,855,749.77;

WHEREAS, the CITY desires to cooperate by contributing $755,008.37 upon execution of this agreement, $ 347,000 in October 2017, $416,000 in October 2018 and $337,741.40 in October 2019. Any over runs and/or under runs will be shared equally between the CITY and COUNTY for this Phase I & II development costs;

WHEREAS, the COUNTY's estimated share is $2,043,741.40 for Phase I & II project development costs;

WHEREAS, CITY and COUNTY are authorized to enter into this Agreement pursuant to the Interlocal Cooperation Act, Texas Government Code 791.001 et. Seq. which authorizes local governments to contract with each other to perform governmental functions and services under the terms of the Act;

NOW, THEREFORE, CITY and COUNTY, in consideration of the mutual covenants expressed hereinafter, agree as follows:

1. COUNTY and CITY desire to complete Phase II of this project development in this Agreement consisting of and including:

    - Field Surveys, Right-of-Way Map, Plans, Specification & Estimates, Roadway Right-of-Way Acquisition/ Compensable Utility Services.

2. The Road serves as a connecting link and is an integral part of the county road system and such road improvements are in the best interest of the COUNTY and CITY.

3. The CITY and COUNTY desire to equally share the total estimated project development cost.

4. The estimated total Phase I & II projects development cost is $ 4,087,482.80 as identified in Exhibit B.

5. The CITY's estimated share of Phase I & II project development cost is $2,043,741.40 of which the CITY has already contributed $187,991.63 leaving a balance of $1,855,749.77.

6. The CITY shall pay the COUNTY the sum of $755,008.37 upon execution of this Agreement, $347,000 in October 2017, $416,000 in October 2018 and $337,741.40 in October 2019. Any over runs and/or under runs will be shared equally between the CITY and COUNTY for this Phase I & II development costs;
.
7. The COUNTY's estimated share is $2,043,741.40 for Phase I & II project development costs.

8. To the extent the terms and conditions of the Agreement conflict with the terms and conditions of the August 6, 2013 Agreement, the terms of this Agreement shall control.

9. Each party agrees to conform to its own applicable purchasing laws, regulations, policies, and procedures with respect to the portion of the work under this Agreement performed by each party.

10. Conflict of Applicable Law: Nothing in this Agreement shall be construed so as to require the commission of any act contrary to law, and whenever there is any conflict between any provision of this Agreement and any present or future law, ordinance, or administrative, executive or judicial regulation, order or decree, or amendment thereof, contrary to which the parties have no legal right to contract, the latter shall prevail, but in such event the affected provision or provisions of the Agreement shall be modified only to the extent necessary to bring them within the legal requirements and only during the time such conflict exists.

11. No Waiver: No waiver by any party hereto of any breach of any provision of the Agreement shall be deemed to be a waiver of any preceding of succeeding breach of the same or any other provision hereof.

12. Entire Agreement: This Agreement contains the entire contract between the parties hereto and each party acknowledges that neither has made (either directly or through any agreement or representative) and representation or agreement in connection with this Agreement not specifically set forth herein. This Agreement may be modified or amended only by agreement in writing executed by Mission, McAllen and County, and not otherwise.

13. TEXAS LAW TO APPLY: THIS AGREEMENT SHALL BE CONSTRUED UNDER AND IN ACCORDANCE WITH THE LAWS OF THE STATE OF TEXAS, AND ALL OBLIGATIONS OF THE PARTIES CREATED HEREUNDER ARE PERFORMABLE IN HIDALGO COUNTY, TEXAS. THE PARTIES HEREBY CONSENT TO PERSONAL JURISDICTION IN HIDALGO COUNTY, TEXAS.

14. Notice: Except as maybe otherwise specifically provided in this Agreement, all notices, demands, requests or communication required or permitted hereunder shall be in writing and shall either be (i) personally delivered against a written receipt, or (ii) sent by registered or certified mail, return receipt requested, postage prepaid and addressed to the parties at the addresses set forth below, or at such other addresses as may have been theretofore specified by written notice delivered in accordance herewith:

If to Weslaco:	City of Weslaco Attention: David Suarez, Mayor 225 S. Kansas Ave. Weslaco, Texas 78596
If to County:	Hidalgo County, Texas Attn: Honorable Ramon Garcia, Hidalgo County Judge P. O. Box 758 Edinburg, Texas 78540-0758
Copies to:	David Fuentes, Commissioner, Precinct No. 1 1902 Joe Stephens Ave. Weslaco, Texas 78596

15. Each notice, demand, request or communication which shall be delivered or mailed in the manner described above shall be deemed sufficiently given for all purposes at such time as it is personally delivered to the addressee, or, if mailed, at such time as it is deposited in the United States mail.

16. Additional Documents: The parties hereto covenant and agree that they will execute such other and further instruments and documents as are or may become necessary or convenient to effectuate and carry out the terms of this agreement.

17. Successors: This Agreement shall be binding upon and inure to the benefit of the parties hereto and their respective heirs, executors, administrators, legal representatives, successors, and assigns where permitted by this Agreement.

18. Assignment: This Agreement shall not be assignable.

19. Headings: The headings and captions contained in this Agreement are solely for the convenience reference and shall not be deemed to affect the meaning or interpretation of any provision of paragraph hereof.

20. Gender and Number: All pronouns used in this Agreement shall include the other gender, whether used in the masculine, feminine or neuter gender, and singular shall include the plural whenever and as often as may be appropriate.

21. Authority to Execute: The execution and performance of this Agreement by the Mission, McAllen and County have been duly authorized by all necessary laws, resolutions or corporate action, and this Agreement constitutes the valid and enforceable obligations of the Cities and County in accordance with its terms.

22. Governmental Purpose: Each party hereto is entering into the agreement for the purpose of providing for governmental services or functions and will pay for such services out of current revenues available to the paying party as herein provided.

23. Commitment or Current Revenues Only: In the event that during any term hereof; the governing body of any party does not appropriate sufficient funds to meet the obligations of such party under this Agreement, then any party may terminate this Agreement upon ninety (90) days written notice to the other party. Each of the parties hereto agrees, however, to use its best efforts to secure funds necessary for the continued performance of this Agreement. The parties intend this provision to be a continuing right to terminate this Agreement at the expiration of each budget period of each party hereto pursuant to the provisions of Tex. Loc. Govt. Code Ann. §271.903.

24. Following completion of construction of the Road each party hereto shall maintain the road within their respective jurisdictions where applicable.

WITNESS THE HANDS OF THE PARTIES effective as of the day and year first written above.

CITY OF WESLACO

By: _____
David Suarez, Mayor

ATTEST:

_____
City Secretary

COUNTY OF HIDALGO

By: _____
Ramon Garcia, County Judge

ATTEST:

_____
County Clerk

APPROVED AS TO FORM:

By: _____
Juan Gonzales
Weslaco City Attorney

APPROVED AS TO FORM:
Atlas, Hall & Rodriguez, L.L.P.

By: _____
Stephen L. Crain

STATE OF TEXAS §
§
COUNTY OF HIDALGO §

APPROVAL OF
INTERLOCAL COOPERATION AGREEMENT
PROJECT

In accordance with Texas Government Code §791.014, Hidalgo County, Texas, acting by and through the Hidalgo County Commissioners Court, has been advised of a proposed project to desire to widen and reconstruct Mile 6 West between Mile 9 and Mile 11 through a Phase II Interlocal Cooperation Agreement to be entered into with the City of Weslaco, Texas, and Hidalgo County.

By vote on_____ 2017, the Hidalgo County Commissioners Court has approved the Project identified above.

_____
By: Ramon Garcia, County Judge

ATTEST:

_____
Arturo Guajardo, County Clerk

APPROVED AS TO FORM:

Atlas, Hall & Rodriguez, L.L.P.

By: _____
Stephen L. Crain

Zimbra **jorge.pena1@co.hidalgo.tx.us**

RE: Phase I & II ICA revised attachment

From : Steve Crain <scrain@atlashall.com> Thu, Apr 13, 2017 12:21 PM
Subject : RE: Phase I & II ICA revised attachment
To : 'Jorge L. Pena' <jorge.pena1@co.hidalgo.tx.us>

You too.

-----Original Message-----
From: Jorge L. Pena [mailto:jorge.pena1@co.hidalgo.tx.us]
Sent: Thursday, April 13, 2017 12:10 PM
To: Steve Crain <scrain@atlashall.com>
Subject: Re: Phase I & II ICA revised attachment

Mr. Crain,

Thank you sir, greatly appreciated. Wishing you and your family a Happy Easter!

Best Regards,

Jorge Pena

----- Original Message -----
From: "Steve Crain" <scrain@atlashall.com>
To: "Jorge L. Pena" <jorge.pena1@co.hidalgo.tx.us>
Sent: Thursday, April 13, 2017 7:58:11 AM
Subject: RE: Phase I & II ICA revised attachment

Looks OK.

-----Original Message-----
From: Jorge L. Pena [mailto:jorge.pena1@co.hidalgo.tx.us]
Sent: Wednesday, April 12, 2017 5:37 PM
To: Steve Crain <scrain@atlashall.com>
Subject: Re: Phase I & II ICA revised attachment

Mr. Craine,

Attached is the revised ICA as per your recommendation. Please keep us posted.

Best regards,

Jorge Pena

----- Original Message -----
From: "Jorge L. Pena" <jorge.pena1@co.hidalgo.tx.us>
To: "Steve Crain" <scrain@atlashall.com>
Sent: Tuesday, April 11, 2017 12:17:12 PM
Subject: Re: Phase I & II ICA revised attachment

----- Original Message -----
From: "Jorge L. Pena" <jorge.pena1@co.hidalgo.tx.us>
To: "Steve Crain" <scrain@atlashall.com>
Sent: Tuesday, April 11, 2017 12:11:28 PM
Subject: Re: Phase I & II ICA revised attachment

for your review,

thank you,

Jorge Pena

----- Original Message -----
From: "Steve Crain" <scrain@atlashall.com>
To: "Jorge L. Pena" <jorge.pena1@co.hidalgo.tx.us>
Sent: Tuesday, April 11, 2017 11:55:32 AM
Subject: RE: Phase I & II ICA revised attachment

Please send me the original interlocal. Thanks.

-----Original Message-----

From: Jorge L. Pena [mailto:jorge.pena1@co.hidalgo.tx.us]
Sent: Tuesday, April 11, 2017 11:29 AM
To: Steve Crain <scrain@atlashall.com>
Subject: Re: Phase I & II ICA revised attachment

Mr. Crain,

My appologies, attached is the revised ICA. Please keep us posted.

Jorge Pena

----- Original Message -----
From: "Steve Crain" <scrain@atlashall.com>
To: "Jorge L. Pena" <jorge.pena1@co.hidalgo.tx.us>
Sent: Thursday, April 6, 2017 8:29:41 AM
Subject: Phase I & II

Good morning Mr. Pena:

Please refer to the attached and make revisions, should you have any questions, please call our office.

Thank you,

Marynel Trevino-Rodriguez, Secretary for Stephen L. Crain & J. Joseph Vale ATLAS, HALL & RODRIGUEZ, LLP
818 Pecan Blvd. (78501)
P. O. Box 3725
McAllen, Texas 78502
Direct Telephone Number (956) 632-8221
Office Telephone Number (956) 682-5501
Facsimile Number (956) 686-6109
Website address: www.atlashall.com

E-MAIL NOTICE -- This transmission may be: (1) subject to the Attorney-Client Privilege, (2) an attorney work product, or (3) strictly confidential. If you are not the intended recipient of this message, you may not disclose, print, copy or disseminate this information. If you have received this in error, please reply

AI-59945 **Purchasing Department** **22. C. 7.**

CC - REGULAR

Meeting Date: 05/30/2017

Submitted For: David Fuentes, COMM. PCT. #1 **Submitted By:** Erica Espinosa, COMM. PCT. #1

Department: COMM. PCT. #1

Information

CAPTION

Pct. #1:
Acceptance and approval for items under Contract #C-16-363-11-01 between Hidalgo County [Pct. #1] ASAGO LLC, dba, ASAGO Construction for the FEMA Road & Drainage Improvements: Mile 2.5 East Road including but not limited to the following:
A. Certificate of Substantial Completion reflecting the date of May 11, 2017; and,
B. Payment Application No. 6 (Retainage) in the amount of $23,421.33.

BACKGROUND

FEMA – MILE 2.5 EAST PO 753760

Fiscal Impact

CALENDAR YEAR: 2017 **ACCT. #:** 7-1280-431-00-121-811-5-721

FUNDS AVAILABLE Y/N?: Yes/pend **MATCHING FUNDS Y/N?:**

BUDGETARY IMPACT:

PO#753760
*pending payment #5 to be processed for total retainage available

---

Attachments

Pmt Application No. 6/Retainage
Certificate of Construction Completion

Form Review

Inbox	Reviewed By	Date
Purchasing - Internal	Marty Salazar	05/25/2017 05:12 PM
Budget & Management	Veronica Ortiz	05/26/2017 08:42 AM
Final Approval	Monica Salinas	05/26/2017 02:58 PM
Form Started By: Erica Espinosa		Started On: 05/22/2017 02:39 PM
Final Approval Date: 05/26/2017		

APPLICATION FOR PAYMENT NO. 6 & RETAINAGE

To: **HIDALGO COUNTY** (OWNER)
From: **ASAGO LLC, dba ASAGO CONSTRUCTION** (CONTRACTOR)
Contract: **C-16-363-11-01**
Project: **Hidalgo County Precinct No. 1**
FEMA Road Drainage Improvements - Mile 2.5 East Road
Owner's Contract No. **C-16-363-11-01** PO# 753760
For Work accomplished through the date **April 19, 2017**

1. Original Contract Price:	$234,213.30
2. Net change by Change Order and Written Agreements(+or-):	$0.00
3. Current Contract Price (1 plus 2):	$234,213.30
4. Total completed and stored to date:	$234,213.30
5. Retainage (per Agreement):	
10% of completed Work:	
of stored material	
Total Retainage:	$0.00
6. Total completed and stored to date less retainage (4 minus 5)	$234,213.30
7. Less previous Application for Payments:	$210,791.97
8. AMOUNT DUE THIS APPLICATION (6 MINUS 7)	$23,421.33

Accompanying Documentation:

APPLICATION FOR PAYMENT
CONTRACTOR'S AFFIDAVIT OF RELEASE OF LIENS
CONTRACTOR'S AFFIDAVIT OF PAYMENT OF DEBTS AND CLAIMS
CERTIFICATE OF CONSTRUCTION COMPLETION

CONTRACTOR'S Certification:

The undersigned CONTRACTOR certifies that (1) all previous progress payments received from OWNER on account of Work done under the Contract referred to above have been applied on account to discharge CONTRACTOR'S legitimate obligations incurred in connection with Work covered by prior Applications for Payment numbered 1 through 6 inclusive: (2) title of all Work, materials and equipment incorporated in said Work or otherwise listed in or covered by this Application for Payment will pass to OWNER at time of payment free and clear of all Liens, security interests and encumbrances (except such as are covered by a Bond acceptable to OWNER indemnifying OWNER against any such Lien, security interest or encumbrance); and (3) all Work covered by this Application for Payments is in accordance with the Contract Documents and not defective.

Date: April 19, 2017

ASAGO LLC, dba ASAGO CONSTRUCTION
CONTRACTOR

By: _____
Raul Iglesias, Member

State of Texas
County of Hidalgo
Subscribed and sworn to before me this 19th day of April 2017

_____
Notary Public
My Commission expires: 1/25/2021

SANDRA RAMOS
Notary Public, State of Texas
Comm. Expires 01-25-2021
Notary ID 11116892

Payment of the above AMOUNT DUE THIS APPLICATION is recommended.

Date: 4/19/17

LeFEVRE Enginerring & Management Consulting, LLC
ENGINEER

By: _____

CERTIFICATE OF CONSTRUCTION COMPLETION

THIS IS TO CERTIFY THAT ON 11th DAY OF May, **2017**, A FINAL INSPECTION was made of the project herein described:

CONTRACT

DATE: **November 1, 2016**
OWNER: **Hidalgo County**
CONSTRUCTION CONTRACTOR: **Asago, LLC dba Asago Construction**
OF THE CITY OF **Mission** STATE OF **Texas**

PROJECT DESCRIPTION

CONSTRUCTION OF **FEMA Road and Drainage Improvements – Mile 2.5 East Road**
CONTRACT NO. **C—16-363-11-01** located in or near the City/Pct. of **Hidalgo County Precinct No. 1**

THIS IS TO CERTIFY:

1. That the work has been completed in accordance with the plans and specification and all addenda, change orders, supplemental agreements thereto, and with the following exceptions: **N/A**

2. That the sum of **N/A** ($_____), deducted from the final payment of the Contractor is a fair and equitable settlement for the foregoing except work.

3. That the Contractor has presented a "Certificate of Release" stating under oath, that all claims arising out of the performance of work have been fulfilled, and the OWNER is released from all claims arising under or virtue of said contract.

4. That the CONTRACTOR has presented in behalf of itself and its sureties, satisfactory evidence that it is bound to repair, replace, and make good any faulty workmanship and/or materials discovered in the work within a period of one year from this date, as provided in said contract.

5.

Amount of Original Contract	$ 234,213.30
Present Amount of Contract	234,213.30
Total Amount Earned to Date	234,213.30
Less Previous Payments	210,791.97
Balance	23,421.33
Authorized Deductions	0.00
AMOUNT OF FINAL PAYMENT	$ 23,421.33

6. That the final payment in the amount of $**Twenty-Three Thousand Four Hundred Twenty-One** dollars and **Thirty-Three** cents ($**23,421.33**) is now due and payable.

Lefevre Engineering

CONCURRED BY:

ASAGO, LLC dba Asago Construction
CONTRACTOR'S NAME

BY: _____

TITLE: Member

CONCURRED BY:

Hidalgo County PCT #1
COUNTY/PRECINCT

BY: _____

TITLE: Chief Administrator

CONCURRED BY:

HIDALGO COUNTY JUDGE

BY: RAMON GARCIA

TITLE: COUNTY JUDGE

Exhibit E-M

AI-60010 **Purchasing Department** **22. D. 1.**

CC - REGULAR

Meeting Date: 05/30/2017

Submitted For: Norma Ceballos, COMM. PCT. #3

Submitted By: Norma Ceballos, COMM. PCT. #3

Department: COMM. PCT. #3

Information

CAPTION

A. Requesting approval of "Supplemental Agreement No. 1" as submitted by L&G Engineering Contract C-15-161-11-17 to extend the project limits as requested by the Texas Department of Transportation, to include the section from IH2 (US83) on Abram Road North to Veterans Blvd. (approximately 0.2 Miles), thence East to SH 364 (La Homa);
B. Acceptance and approval of Work Authorization No. 2 (with an estimated cost of $1,321,800.00) as submitted by project engineer, L&G Consulting Engineers, Inc. dba L&G Engineering for, "PS&E, Surveys, Right-of-Way Map and Permitted Utilities Coordination for the Veterans Boulevard (SH 495) project from IH2 (US83) to La Homa Road (SH 364)" located in Precinct 3 through Contract # C-15-161-11-17;

C. Pursuant to contract with L&G Engineering, (Article 14) to C-15-161-11-17, approval to permit the subcontracting of R.O.W. Surveying Services, LLC and Ergonomic Transportation Systems, Inc. for the Veterans Boulevard Project.

BACKGROUND

Fiscal Impact

CALENDAR YEAR: **ACCT. #:**

FUNDS AVAILABLE Y/N?: **MATCHING FUNDS Y/N?:**

BUDGETARY IMPACT:

As per Ms. N. Ceballos, Pct. #3, funding for project is divided: half for City and half from Pct. #3 which is place (AI-60036 pending approval by CC).

Attachments

Supplemental Agreement No. 1
Work Auth. No. 2
Sub- Consultants
1295 Form

Form Review

Inbox	Reviewed By	Date
Purchasing - Internal	Marty Salazar	05/26/2017 10:24 AM
Budget & Management	Veronica Ortiz	05/26/2017 10:31 AM
Final Approval	Monica Salinas	05/26/2017 02:58 PM

Form Started By: Norma Ceballos Started On: 05/25/2017 12:16 PM

Final Approval Date: 05/26/2017

EXHIBIT "F"

Supplemental Agreement Form

THE STATE OF TEXAS §
§
COUNTY OF HIDALGO §

SUPPLEMENTAL AGREEMENT NO. 1

TO AGREEMENT FOR PROFESSIONAL SERVICES
C-15-161-11-17

This SUPPLEMENTAL AGREEMENT is made pursuant to the terms and conditions of Article 8 of the Agreement made by and between HIDALGO COUNTY, acting herein by and through the Commissioner's Court, hereinafter called the "Owner", and L&G Consulting Engineers, Inc. d/b/a L&G Engineering, Professional Engineers of, Mercedes, Texas, hereinafter called "Engineer".

WITNESSETH

WHEREAS, the Owner and the Engineer executed the Agreement on the 15th day of November, 2015 concerning professional engineering services required for the Veterans Boulevard (SH 495) project from Abram Road East to La Homa Road for Hidalgo County Precinct No. 3 hereinafter referred to as the project; and,

WHEREAS, it has become necessary to amend the Agreement for Professional Services in order to extend the limits of the Veterans Boulevard project as requested by the Texas Department of Transportation.

A. AGREEMENT

NOW THEREFORE, premises considered, the Owner and the Engineer agree that said Agreement is amended as follows:

1) *Revise the project limits as requested by the Texas Department of Transportation to extend the limits from IH-2 (US83) on Abram Road North to Veterans Boulevard (approximately 0.2 Miles), thence East to SH 364 (La Homa) as identified on the attached Location Map.*

All other provisions are unchanged and remain in full force and effect.

IN WITNESS WHEREOF, the Engineer and the Owner have caused this Supplemental Agreement to the Agreement for Professional Services to be executed as of the _____ day of _____, 2017.

THE ENGINEER:
ENGINEER

BY: _____

THE OWNER:
HIDALGO COUNTY

BY: _____
Ramon Garcia, County Judge

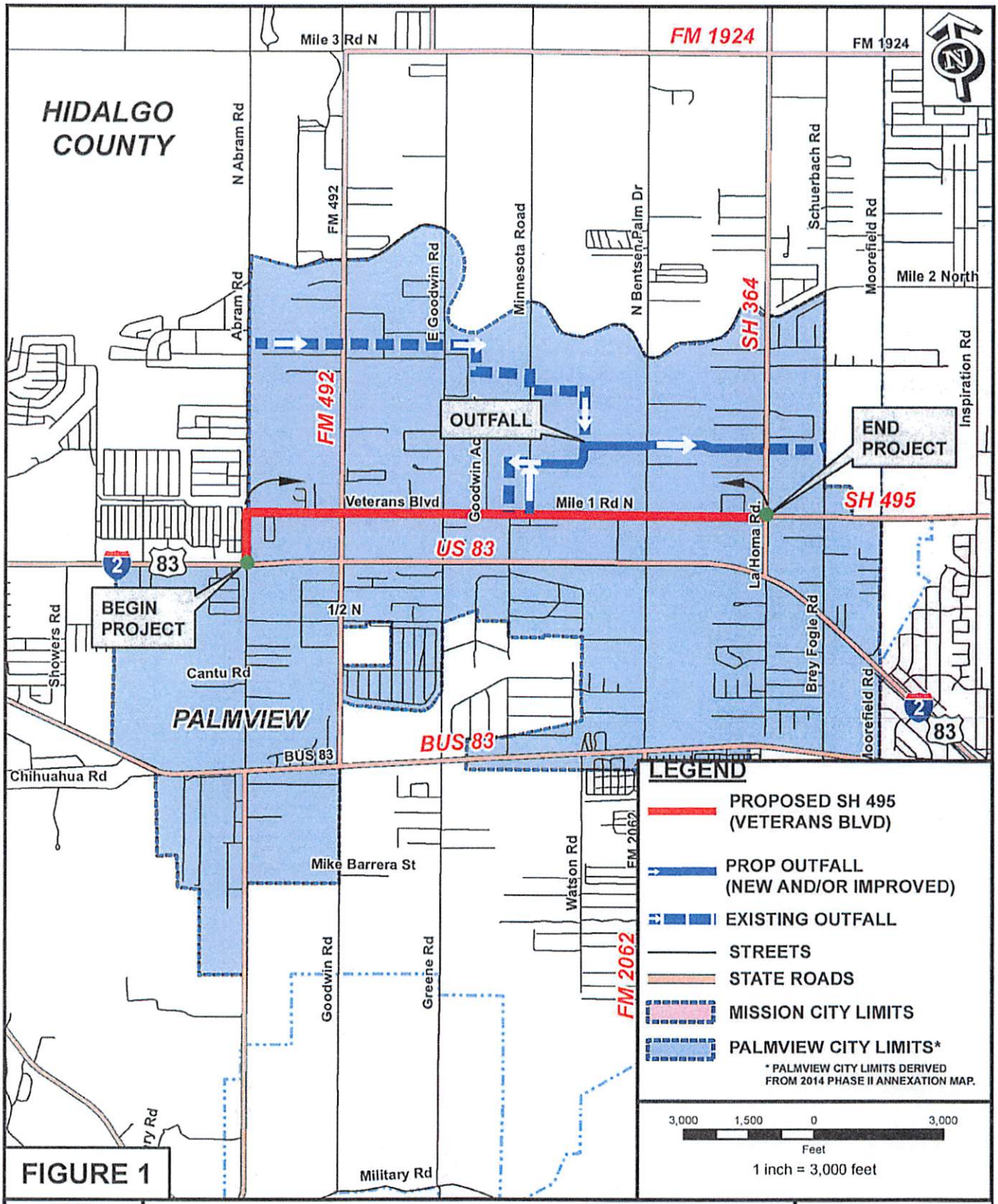

FIGURE 1

SH 495 (VETERANS BLVD) LOCATION MAP

FROM IH-2 (US 83) TO SH 364 (LA HOMA RD)
(Approx. 2.5 miles)

THE COUNTY OF HIDALGO TEXAS

CITY OF PALMVIEW TEXAS

Document Path: G:\GIS \PROJECTS\HIDALGO\VETERANS ROAD (MILE 1) FROM LA HOMA TO ABRAM - BUS 83\2016\TECHNICAL REPORTS\NOISE\FIG 01 VETERANS ROAD LOCATION MAP.mxd

HIDALGO COUNTY
Professional Engineering Services
Contract # C-15-161-11-17
Work Authorization Form

WORK AUTHORIZATION NO. 2

THIS WORK AUTHORIZATION is made pursuant to the terms and conditions of Article 1 of the Agreement made by and between **HIDALGO COUNTY**, action herein by and through the **Commissioner's Court**, hereinafter called the "**Owner**," and, **L&G Consulting Engineers, Inc.** *d/b/a* **L&G Engineering**, professional engineers of Mercedes, Texas hereinafter called "**Engineer**".

PART 1. SCOPE OF WORK

The purpose of this Work Authorization is for the **Engineer** to provide Engineering Services required for the preparation for the PS&E, Surveys, Right-of-Way Map and Permitted Utilities Coordination for the Veterans Boulevard (SH 495) project from IH2 (US83) to La Homa Road (FM 364).

The scope of services to be provided by the **Owner** is identified in ***EXHIBIT "A" - Scope of Services to be provided by the Owner*** attached hereto.

The scope of services to be provided by the **Engineer** is identified in ***EXHIBIT "B" - Scope of Services to be provided by the Engineer*** attached hereto.

PART 2. ESTIMATED COST

The estimated cost for services under this Work Authorization is **$1,321,800.00**. This amount is based upon the costs outlined in the Estimated **Cost Proposal** attached hereto as ***EXHIBIT "D-1" - Estimated Man-hour Breakdown.***

PART 3. PAYMENT

Compensation and payment to the Engineer for the services established under this Work Authorization shall be made in accordance with **Article 6** of the Agreement.

PART 4. FUNDING

This Work Authorization No. 1 shall be funded through funding source:
Account No. _____
Requisition Number _____ **(MUST BE INCLUDED AFTER CC APPROVAL)**

PART 5. PERIOD OF SERVICE

This Work Authorization shall become effective on the date of final acceptance of the parties hereto, and terminate upon completion of scopes of the work authorization, as identified on *EXHIBIT "C" – Work Schedule.*

PART 6. RESPONSIBILITIES AND OBLIGATIONS

This Authorization does not waive the parties' responsibilities and obligations provided under the **Agreement**.

PART 7. ACKNOWLEDGEMENT AND CONFIRMATION

Acknowledgement and confirmation by Hidalgo County Precinct No. 3, Commissioner Joe Flores as to the content and detail of this Work Authorization No. 1.

HIDALGO COUNTY
COMMISSIONER PRECINCT NO. 3

BY:_____

PART 8. ACCEPTANCE AND APPROVAL

This Work Authorization is hereby accepted, approved by Hidalgo County Commissioners' Court on _____ as indicated below.

THE ENGINEER:
L&G ENGINEERING

_____
By: Jacinto Garza, P.E.
President

THE OWNER:
HIDALGO COUNTY

_____
By: Ramon Garcia,
County Judge

ATTEST:

_____
By: Arturo Guajardo, Jr., County Clerk

LIST OF EXHIBITS

Location Map
Exhibit A – Services to be provided by Owner
Exhibit B – Services to be provided by Engineer
Exhibit C – Work Schedule
Exhibit D-1 – Estimated Man-hour Breakdown

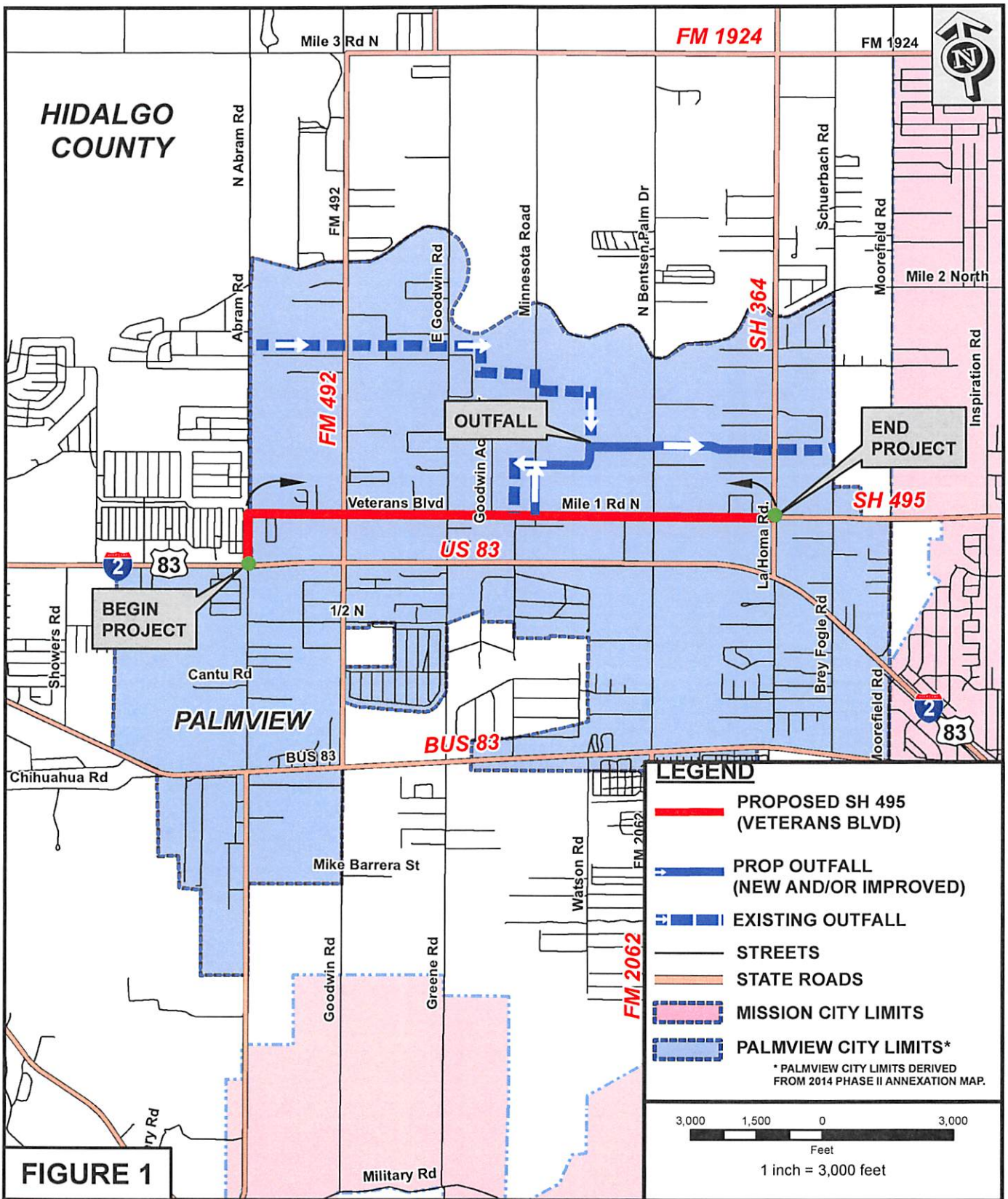

FIGURE 1

SH 495 (VETERANS BLVD) LOCATION MAP

FROM IH-2 (US 83) TO SH 364 (LA HOMA RD)

THE COUNTY OF HIDALGO TEXAS

CITY OF PALMVIEW TEXAS

Document Path: G:\GIS \PROJECTS\HIDALGO\VETERANS ROAD (MILE 1) FROM LA HOMA TO ABRAM - BUS 83\2016\TECHNICAL REPORTS\NOISE\FIG 01 VETERANS ROAD LOCATION MAP.mxd

EXHIBIT "A"

Services to be provided by the County

1. The County will issue work authorization to initiate all required services and designate the authorized representative of the coordination of each work authorization.

2. The County will provide copies of all subdivision plats of record and/or in the subdivision process.

3. The County will provide the Engineer with on-going guidance, timely reviews, and decisions necessary to complete services required by the work authorization in order to permit the Engineer to maintain an agreed upon project schedule.

4. The County will process all acceptable requests for payment in a timely manner.

EXHIBIT "B"
SCOPE OF SERVICES TO BE PROVIDED BY THE ENGINEER

SECTION 1-PROJECT DESCRIPTION

The services designated herein as "Services provided by the ENGINEER" shall include the performance of all engineering services for the following described facility:

COUNTY/CITY:	HIDALGO COUNTY
CONTROL:	0865-01-082
PROJECT/DESCRIPTION:	PROPOSED URBAN ROADWAY
LENGTH:	2.5 MILES
HIGHWAY:	VETERANS BLVD. (SH 495)
LIMITS:	FROM IH-2/US 83 TO SH 364 (LA HOMA)

PROJECT CLASSIFICATION

(Place an "X" in only one Project Classification)

___ Surface Treatment
___ Overlay
___ Rehabilitation Existing Road (Scarify & Reshape)
___ Convert Non-Freeway to Freeway
___ Widen Freeway
_X_ Widen Non-Freeway
___ New Location Toll Freeway
___ New Location Non-Freeway
___ Interchange (New or Reconstruct)
___ Bridge Widening or Rehabilitation
___ Bridge Replacement
___ Upgrade to Standards - Freeway
___ Upgrade to Standards - Non-Freeway
___ Miscellaneous Studies (Use Function Code 110 for All Tasks)

ENGINEER shall mean L&G Engineering.

STATE shall mean Texas Department of Transportation and/or City of Palmview.

COUNTY shall mean Hidalgo County.

CITY shall mean the City of Palmview.

LPA shall mean Hidalgo County.

EXHIBIT "B"
SCOPE OF SERVICES TO BE PROVIDED BY THE ENGINEER

SECTION 5 - RIGHT-OF-WAY DATA

(Function Code 130)

(ESTIMATED PROPOSED 75 PARCEL ROW MAP)

Services Provided By:
SURVEYOR LPA

NOTE: No work involving right-of-way (ROW) data is to be performed until the ENGINEER has given the SURVEYOR written approval of the final location of the proposed ROW lines as approved by TxDOT and the LPA.

A. RIGHT-OF-WAY MAPPING:

1. **PURPOSE:**
   The purpose of right-of-way mapping is to prepare documents suitable for the acquisition of real property interests and the probable issuance of a title policy.
2. **DEFINITIONS:**
   For purposes of this Contract, the following definitions shall apply:
   2.1. Abstract Map – A drawing to scale prepared from record documents depicting proposed right-of-way lines, existing right-of-way lines, easement lines, and private property lines with relevant grantee names, recording data, and recording dates.
   2.2. Closure/Area Calculation Sheet – A computer generated print-out of the area and the perimeter bearings, distances, curve data, and coordinates of an individual parcel of land to be acquired.
   2.3. Access Denial Line – A line which indicates specific location where access to the roadway is denied.
   2.4. Property Descriptions – A written metes and bounds description delineating the area and the boundary and describing the location of an individual parcel of land unique to all other parcels of land.
   2.5. Owner – The most current title holder of record as determined by a study of the Real Property Records.
   2.6. Parcel Plat – An 8 ½ inch by 11 inch drawing to scale depicting all the information shown on the right-of-way map regarding an individual parcel of land to be acquired.
   2.7. Parent Tract – A unit or contiguous units of land under one ownership, comprising a single marketable tract of land consistent with the principle of highest and best use. A parent tract may be described by a single instrument or several instruments. A single parent tract cannot be severed by a public right-of-way, easement, or separate ownership which destroys unity of use.
   2.8. Parent Tract Inset – A small line drawing, to an appropriate scale, of the parent tract perimeter placed upon the right-of-way map in the proximity of the respective parcel. Parent tract insets are used in cases where the parent tract cannot be shown to the same scale as the right-of-way map. Since parent tract insets are used to identify the limits and location of parent tracts, they should include public right-of-ways, utility easements and fee strips, and identifiable water courses which bound the parent tract.
   2.9. Point of Beginning (P.O.B.) – A corner of the parcel of land to be acquired, located on the proposed right-of-way line and being the beginning terminus of the first course of the property description.
   2.10. Point of Commencing (P.O.C.) – A monumented property corner which can be identified in the Real Property Records and is located outside the proposed right-of-way corridor. For title purposes, the point of commencing should be a monumented back corner of the parent tract. In the event a monumented back corner of the parent tract cannot be recovered, the nearest identifiable monumented property corner located outside the proposed right-of-way corridor may be used.

EXHIBIT "B"
SCOPE OF SERVICES TO BE PROVIDED BY THE ENGINEER

Services Provided By:
SURVEYOR LPA

2.11. Preliminary Right-of-Way Layout/Abstract Map – A drawing to scale depicting proposed right-of-way lines, existing right-of-way lines, proposed pavement, access denial lines, the proposed centerline alignment, private property lines, easement lines, visible improvements, visible utilities, the station and offset from the centerline alignment to each Point of Curvature (PC), Point of Tangency (PT), and angle point in the proposed right-of-way lines and to each PC, PT, and angle point in the existing right-of-way lines in areas of no proposed acquisition. *(Reference Sample Attached)*

2.12. Right-of-Way Maps/Property Description/Parcel Plats – A series of 22 inch by 34 inch and 11 inch by 17 inch drawings to scale depicting the results of relevant elements of records research, field work, analysis, computation, and map making required to determine title, delineate areas and boundaries, locate and describe utilities and improvements to the extent necessary to appraise the value and negotiate the acquisition of individual parcels of private land for a proposed right-of-way project. *(Reference Sample Attached)*

3. WORK TO BE PERFORMED:

YES N/A

3.1. Preliminary Right-of-Way Layout/Abstract Map:

An abstract map shall be prepared sufficient to determine the following:

3.1.1. Any and all interests of public record held in the land to be acquired.

3.1.2 The total record holdings of an owner contiguous to land to be acquired from that owner.

3.1.3. Any and all interests in land to be acquired held in common (shopping mall parking lots, subdivision reserves, etc.)

3.1.4. Any and all improvements proposed by other agencies which may have a bearing on project development.

3.1.5. All called monuments, bearings, and distances as per recorded information.

3.1.6. Preliminary Parcel numbering system.

3.1.7. Any and all utilities (permitted or of record)

3.1.8. Reference Sample provided.

YES N/A

3.2. Right-of-Way Map:

The SURVEYOR shall field locate property corners, existing right-of-way markers, improvements, visible utilities, verify and update the planimetric file, if provided, and as directed by the ENGINEER.

A right-of-way map shall be prepared for each proposed right-of-way project. A right-of-way map shall include a title sheet, an index sheet, a survey control index sheet, a horizontal and vertical control data sheet, and sufficient plan sheets to cover the proposed project, or as directed by the ENGINEER. The STATE has developed standard title sheets, index sheets, and plan sheets, copies of which the SURVEYOR shall request and secure for all purposes of this Contract. Plan sheets shall include, but need not be limited to, the following items of information.

By mutual agreement between the Texas Board of Professional Land Surveying and the TxDOT, right-of-way maps need not be signed and sealed by a Registered Professional Land Surveyor.

3.2.1. Proposed right-of-way lines shall be delineated with appropriate bearings, distances, and curve data. Curve data shall include the radius, delta angle, arc length, and long chord bearing and distance.

3.2.2. Existing right-of-way lines shall be delineated with appropriate bearings, distances, and curve data to the extent necessary to describe the individual parcels of land to be acquired. Curve data shall include the radius, delta angle, arc length, and long chord bearing and distance.

Services Provided By: SURVEYOR	LPA
YES	N/A

3.2 *Right-of-Way Map Continued (continued)*

3.2.3. The proposed project baseline alignment shall be delineated with appropriate bearings, distances, and curve data. Curve data shall include the station of the curve Point of Intersection (PI), radius, delta angle, arc length, tangent length, long chord bearing and distance, and the N and E coordinates of the curve PI. All alignment PCs, PTs, and even 500 foot stations shall be labeled as to station.

3.2.4. Proposed paving lines combined with relevant existing paving lines shall be shown to the extent necessary to compile a complete picture of proposed traffic movements. Proposed paving on the final mylars submitted to the ENGINEER shall be shaded with a dot pattern or highlighted by some other means acceptable to the ENGINEER.

3.2.5. Access denial lines shall be shown sufficiently to indicate areas where access is to be denied and where access is to be permitted if required by the ENGINEER.

3.2.6. Private property lines shall be delineated with appropriate bearings, distances, and curve data to the extent necessary to describe the individual parcels of land to be acquired. Curve data shall include the radius, delta angle, arc length, and long chord bearing and distance.

3.2.7. Porción lines, subdivision lines and survey lines shall be shown and identified by name and Porción number.

3.2.8. County lines and city limit lines shall be located and identified by name.

3.2.9. A north arrow shall be shown on each sheet, and, if possible, located in the upper right corner of the sheet.

3.2.10. Monumentation set or found shall be shown and described as to material and size.

3.2.11. A station and offset shall be shown for each PC, PT, and angle point in the proposed right-of-way lines. Stations and offsets shall be with respect to the proposed centerline alignment.

3.2.12. Intersecting and adjoining public right-of-ways shall be shown and identified by name, right-of-way width, and recording data.

3.2.13. Railroads shall be shown and identified by name, right-of-way width, and recording data.

3.2.14. Utility corridors shall be identified as to easement or fee and recording information shall be identified.

3.2.15. Easements and fee strips shall be shown and identified by width, owner, distance of easement to a property corner of the parent track, and recording data.

3.2.16. Building lines or set-back lines shall be shown and identified.

3.2.17. Visible improvements located within the proposed right-of-way corridor or within 50 feet of a proposed right-of-way line shall be shown and identified.

3.2.18. Structures shall be identified as commercial or residential, by number of stories, and as to type (brick, wood frame, etc.).

3.2.19. Structures which are severed by a proposed right-of-way line shall be dimensioned to the extent necessary to completely delineate the severed parts.

3.2.20. Parking areas, billboards, and other on-premise signs which are severed by a proposed right-of-way line shall be dimensioned to the extent necessary to delineate that portion of the parking area, billboard, or sign which is located within the proposed right-of-way corridor.

EXHIBIT "B"
SCOPE OF SERVICES TO BE PROVIDED BY THE ENGINEER

Services Provided By: SURVEYOR	LPA	
YES	N/A	3.2 *Right-of-Way Map Continued (continued)*

3.2.21. In cases where structures are located outside the proposed right-of-way corridor and within 25 feet of a proposed right-of-way line, the shortest distance between the structure and the proposed right-of-way line shall be shown and field verified.

3.2.22. Visible utilities located within the proposed right-of-way corridor or within 50 feet of a proposed right-of-way line shall be shown and identified.

3.2.23. The location of underground utilities and fuel storage tanks situated within the proposed right-of-way corridor or within 50 feet of a proposed right-of-way line shall be determined and shown as required by the ENGINEER. The visible location of stand pipes, vents and filler caps in conjunction with available design and as-built drawings may be used to determine a most probable location and size in the event an actual location is indeterminable.

3.2.24. Points of commencing and points of beginning shall be shown and labeled. Points of beginning shall be shown with their respective N and E surface coordinates. As an exception, a point of commencing will not be required in the case of a total taking without a remainder.

3.2.25. Each parcel of land to be acquired shall be identified by a parcel number which shall appear in the ownership tabulation and on the right-of-way map in the proximity of the respective parcel. If the SURVEYOR is unfamiliar with the criteria used by the STATE to assign parcel numbers, he shall seek the assistance of the ENGINEER at the time the abstract map is complete. THE SURVEYOR SHALL SEEK ASSISTANCE FROM THE ENGINEER IN DEVELOPING AN OWNERSHIP TABULATION TABLE.

3.2.26. An ownership tabulation shall be shown which shall include the parcel number, existing area of the parent tract, lot(s) and block(s) constituting the parent tract when applicable, owner's name, type of conveyance, film code, county clerk's file number, taking area, and remaining area of the parent tract located left and/or right of the centerline alignment. Types of conveyance, film code and file numbers refer to conveyances into the STATE and will be added to the right-of-way map by the STATE at a later date. Several blank lines shall be provided in the tabulation block to facilitate future map additions.

3.2.27. A parent tract inset shall be shown for each parent tract which cannot be shown to scale on the right-of-way map. The use of broken scale lines should be avoided. When parent tract insets are used, the point of commencing with the appropriate bearing and distance to the point of beginning may be shown on the parent tract inset.

3.2.28. A note shall be included on the title sheet and each map sheet stating the source of bearings, coordinates, and datum used.

3.2.29. Appropriate notes shall be included on the title sheet and each map sheet stating the following:

a. Month(s) and year abstracting upon which the map is based.
b. Month(s) and year field surveys were conducted upon which the map is based.
c. Month and year the map was completed by the SURVEYOR.

3.2.30. The right-of-way CSJ number, if available, shall be shown on each right-of-way map sheet.

EXHIBIT "B"
SCOPE OF SERVICES TO BE PROVIDED BY THE ENGINEER

Services Provided By: SURVEYOR	LPA		
		3.3. Exhibits:	An Exhibit shall be prepared for each parcel or tract consisting of a property description and a parcel plat.
YES	N/A	3.3.1. Property Description:	A property description shall be prepared for each parcel of land to be acquired. Standard formats for property descriptions, copies of which the SURVEYOR shall request to the ENGINEER and secure for all purposes of this Contract. Property descriptions shall include, but need not be limited to, the following items of information. All property descriptions shall be signed and sealed by a Registered Professional Land Surveyor. The property description shall begin with a general description which shall include as a minimum: a. State, County, and Survey within which the proposed parcel of land to be acquired is located. b. A reference to unrecorded and recorded subdivisions by name, lot, block, and recording data to the extent applicable. c. A reference by name to the grantor and grantee, date and recording data of the most current instrument(s) of conveyance describing the parent tract. Use execution dates in deed references as opposed to recording or filing dates. In any case, the property description shall make clear which date is being used. The property description shall continue with a metes and bounds description which shall include as a minimum: d. A point of commencing. e. A point of beginning with the appropriate N and E surface coordinates. f. A series of courses, identified by number and proceeding in a clockwise direction, describing the perimeter of the parcel of land to be acquired, and delineated with appropriate bearings, distances, and curve data. Curve data shall include the radius, delta angle, arc length, and long chord bearing and distance. Each course shall be identified either as a proposed right-of-way line, and existing right-of-way line, or a property line of the parent tract. Each property line of the parent tract shall be described with an appropriate adjoiner call. g. A description of all monumentation set or found shall include, as a minimum, size and material. h. A reference to the source of bearings, coordinates, and datum used.
YES	N/A	3.3.2. Parcel Plat:	A parcel plat shall be prepared for each parcel of land to be acquired. The STATE has developed standard formats for parcel plats, copies of which the SURVEYOR shall request from the ENGINEER and secure for all purposes in this Contract. Parcel plats shall include each and every item of information shown on the right-of-way map which concerns the individual parcel. All parcel plats shall be signed and sealed by a Registered Professional Land Surveyor.

EXHIBIT "B"
SCOPE OF SERVICES TO BE PROVIDED BY THE ENGINEER

Services Provided By: SURVEYOR	LPA		
		4.	**DELIVERABLES:** In preparing right-of-way maps, the following is an outline of the work to be submitted (records should be delivered in a binder):
YES	N/A	4.1.	An Abstract Map of the current record title holders included in the Preliminary Map showing the proposed schematic and existing right-of-way as per General Specifications defined in 2.11.
YES	N/A	4.2.	A Right-of-Way map for the project limits under cover of Title Sheet, Index Sheet, Control Data Sheet, and Exhibits of the property descriptions and parcel plats as per General Specifications defined in 2.12, 3.2 and 3.3. ROW Map Submittal Requirements: 4.2.1. Two (2) paper sets of half-size ROW maps (11"x 17") 4.2.2. One (1) paper set of the full-size ROW maps (22"x 34") 4.2.3. Four (4) sets of original metes & bounds descriptions (field notes) with parcel plats (signed & sealed by the surveyor). *Do not include traverse sheet.* 4.2.4. City requires one (1) electronic copy of the ROW Map on a CD, and One (1) copy of the DGN electronic file on a CD from the surveyor-Both the electronic copy of the ROW Map and the DGN file can be on one CD. IF Roadway is ON-SYSTEM and after Administrative Approval of the ROW Maps by Division (REVISIONS) Submittal Requirements: 4.2.5. Two (2) paper sets of the half-size of the affected ROW map sheets (11"x17"), detailing the revision 4.2.6. One (1) paper set of the full-size of the affected ROW map sheets (22"x 34"), detailing the revision 4.2.7. Four (4) sets of any revised original metes & bounds descriptions (field notes) with parcel plats (signed & sealed by the surveyor). *Do not include traverse sheet.* 4.2.8. Division needs one (1) electronic copy of the revised ROW Map sheets on a CD, and 4.2.9. One (1) copy of the DGN electronic file on a CD from the surveyor-detailing the revision-Both the electronic copy of the revised ROW Map sheets and the DGN file can be on one CD.
YES	N/A	4.3.	Appropriate monuments on the proposed right-of-way lines at intersecting property lines, and at all PCs, PTs, angle points, intersecting right-of-way lines of side streets, and at 1,000 foot stations of the proposed centerline alignment.
YES	N/A	4.4.	Appropriate monuments on the existing right-of-way lines in areas of no acquisition at all PCs, PTs, angle points, and 1,000 foot stations, and as directed by the ENGINEER of the proposed centerline.
YES	N/A	4.5.	A SURVEYOR's report, outlining the approach, reasons or basis for the existing right-of-way determination, and conclusions made.
YES	N/A	4.6.	Records used to establish ownership.
YES	N/A	4.7.	ROW and parcel filed notes signed and sealed by a RPLS.
YES	N/A	4.8.	Computation sheets of survey closures, ground surveys, etc. used to develop plats and meets and bound information.
YES	N/A	4.9.	Items indicated under the Automation Requirements Section 6.
YES	N/A	4.10	Completed (Attached) Checklist with submittal of ROW Map etc.

Services Provided By:
SURVEYOR LPA

5. GENERAL REQUIREMENTS:

For purposes of this Contract, the following general requirements shall apply:

YES N/A

5.1. Copies of instruments of record submitted to the ENGINEER shall be indexed by parcel number.

5.2. Coordinates appearing on right-of-way maps, on parcel plats, and in property descriptions shall be surface coordinates based on the Texas State Plane Coordinate System. The combined adjustment factors (sea level factor x scale factor) which have been developed by the STATE for its use are as follows:

5.2.1. In (List Applicable Counties): Counties (South Zone), grid coordinates are multiplied by a combined adjustment factor of 1.00004 to obtain surface coordinates. For work in Counties other than those listed, the ENGINEER will provide the combine adjustment factor.

5.3. Line and curve tables may be used when necessary.

5.4. The number of centerline alignment stations to be shown on a single plan sheet shall be restricted to the extent necessary to allow approximately 4 inches between match lines and sheet borders for future details and notes.

5.5. A minimum 4 inch by 4 inch space shall be reserved at the bottom right corner of each map sheet for future revision notes.

6. AUTOMATION REQUIREMENTS:

In addition to standard hard copy plots and mylar copies, the following will be required electronically:

YES N/A

6.1. Right-of-way maps and parcel plats shall be prepared using a *Micro Station* software graphics system capable of producing graphics files that can be plotted and viewed without further modification or conversion using *Micro Station V8* graphics system.

6.2. It is the intent of the ENGINEER to secure graphics files which have elements of equal integrity, singularity, and attributes as elements prepared using *Micro Station V8* graphics system.

6.3. For purposes of clarity, consistency, and ease of utilization, the SURVEYOR shall request and secure standards relevant to right-of-way mapping to the extent necessary to ensure that the needs of the ENGINEER are met. This includes, but may not be limited to, TxDOT seed file and corresponding units.def file, TxDOT font resource file, TxDOT GEOPAK SMD file, TxDOT DGNLIB, associated cell libraries and custom line styles, and other files as deemed appropriate for the project.

6.4. Graphics files furnished to the ENGINEER by the SURVEYOR shall be submitted on a Compact Disk CD, DVD or USB, in a format compatible with the ENGINEER's computer system. The SURVEYOR shall confer with the ENGINEER regarding acceptable media and formats before making submissions. The SURVEYOR shall request and secure a Consultant File Index form provided by the ENGINEER, to be completed by the SURVEYOR, and to be submitted to the ENGINEER along with the graphics files.

6.5. Property descriptions shall be prepared using a computer word processing system capable of producing data files readable using *Microsoft Office Word Version 2007* word processing software.

6.6. Data files furnished to the ENGINEER by the SURVEYOR shall be submitted in ACSII format on a CD, DVD or USB.

6.7. Provide to the ENGINEER electronic copies of all instruments of record acquired pursuant to a work authorization.

EXHIBIT "B"
SCOPE OF SERVICES TO BE PROVIDED BY THE ENGINEER

Services Provided By:
SURVEYOR LPA

YES N/A

7. GENERAL SPECIFICATIONS:

For purposes of this Contract, the following general specifications for right-of-way mapping shall apply:

7.1. Completed right-of-way maps shall be submitted to the ENGINEER, 22 inches by 34 inches in size with a 21 inch by 32 inch printed border positioned ½ inch from the top, bottom, and right edge of the sheet. Two copies on 11 inch by 17 inch paper will also be supplied to the ENGINEER.

7.2. Parcel plats shall be submitted to the ENGINEER on 8 ½ inch by 11 inch bond paper with respective borders of 7 ½ inches by 10 inches, positioned ½ inch from the top, bottom, and right edge of the sheet. Match lines shall be used where more than one sheet is required.

7.3. Right-of-way maps shall be drawn to a scale of 1 inch = 50 feet. An appropriate scale other than 1 inch = 50 feet may be used on some proposed right-of-way projects upon prior approval by the ENGINEER.

7.4. Since right-of-way maps are reduced in size by one-half for archiving purposes, the smallest size lettering acceptable on a right-of-way map shall be 1/10 of one inch (Leroy #100). A right-of-way map which contains any lettering smaller than 1/10 of one inch will not be accepted by the ENGINEER.

7.5. Parcel plats shall be drawn to a preferred scale of 1 inch = 50 feet. An appropriate scale other than 1 inch = 50 feet may be used on some proposed right-of-way projects upon prior approval by the ENGINEER. In the case of a very large parcel which would be difficult to show with clarity on a single 8 ½ inch by 11 inch sheet, the SURVEYOR shall use multiple 8 ½ inch by 11 inch sheets with matching lines.

7.6. The smallest size lettering acceptable on a parcel plat shall be 0.06 of an inch (Leroy #60).

7.7. Property descriptions shall be submitted on 8 ½ inch by 11 inch bond paper.

7.8. Zip-A-Tone or other similar stick-on products shall not be used on right-of-way maps or parcel plats.

8. ADHERENCE TO STANDARDS:

For purposes of clarity, consistency, and ease of understanding, the LPA, as an acquiring agency of private property for public use, has adopted the STATE standards and formats for right-of-way mapping which have proven to facilitate the processes of negotiation, appraisal, relocation assistance, and condemnation. It shall be the responsibility of the SURVEYOR to adhere to these standards and formats to every extent possible to ensure that the needs of the acquiring agency are met.

SAMPLES ATTACHED FC 130:

- PRELIMINARY Right-of-Way Layout / Abstract Map
- Right-of-Way Map, Field Notes, Parcel Sketches and Area Computation Sheets

EXHIBIT "B"
SCOPE OF SERVICES TO BE PROVIDED BY THE ENGINEER

ROW MAP CHECKLIST

Consultant: _____
Contract/WA# _____
Responsible Office: _____
Project Manager: _____
County: _____
Highway: _____
RCSJ: _____
CCSJ: _____

As the responsible consultant project manager, I hereby certify that the attached ROW Map has undergone a QA/QC review, with the following applicable items specifically checked for accuracy, completeness and constructability (as noted by Checkmarks)

_____
Signature Date

_____
Printed Name

(This Checklist must be signed by the RPLS and turned in with all proposed ROW Projects.

MAP:

General

___ All documents have been proofread and are accurate.
___ Title Commitments for each individual parcel.
___ Graphics files compatible with Micro station and Word software are provided.
___ Photos of proposed ROW staking included.
___ Field notes and Parcel Plats are numbered continuous.
___ Scale shall be 1"=50' or 1"=100".

Title Sheet Requirements

___ Title and description of project including county, limits, etc....
___ Vicinity map with beginning and ending station
___ Equations and Exceptions
___ Index
___ Legend
___ Title block completely filled out with Construction and R.O.W. CSJs'
___ List all Major Utilities from Station to Station

Individual Map Sheet Requirements

___ Sheet size 34" X 22"
___ Text legible when reduced to half-scale.
___ Title block completely filled out with R.O.W. CSJ
___ Matchlines
___ Project layout sheet
___ Existing utility lines and easements, deed reference, as shown on Schedule "B" of the Title Commitment, and defined on parcel plats

Existing information:

___ R.O.W. lines
___ Whole property or whole property inset
___ Roadways
___ Survey, county, and city limit lines shown and labeled
___ Improvements shown and labeled *(see below)*
___ Monumentation i.e. P.C., P.T., Break Points
___ North arrow
___ Scale
___ Property lines
___ Property descriptions i.e., lot, block, tract, subdivision, etc…
___ Identify existing and proposed access denial locations *(if applicable)*

EXHIBIT "B"
SCOPE OF SERVICES TO BE PROVIDED BY THE ENGINEER

Proposed information:
___ #5- 2-ft iron road set monumentation i.e. P.C., P.T., Break Points and 1000' stations at proposed ROW lines and where existing ROW line is the proposed ROW.
___ Survey and R.O.W. lines
___ Basis of bearings
___ Parcel bearings and distances correspond with traverse sheet
___ Outside ties (P.O.C.) corresponds with field notes
___ Point of beginning (P.O.B.) established on proposed R.O.W. line
___ Parcel tied to baseline
___ Baseline information shown i.e. Stationing, bearings, curve data, etc...
___ Conveyance information shown in tables i.e. parcel number, grantors name, amount of take, remainder etc.
___ Math checked on remainder

Improvements:
___ Improvements bisected or within 25' of proposed R.O.W. line are shown on map with stationing and distance from proposed R.O.W. line. Buildings are labeled and dimensioned.
___ Off-premise outdoor advertising signs within proposed R.O.W. are shown and labeled.

Utilities:
___ All utilities within or crossing existing and proposed right of way are shown and labeled as to size, easement or fee width, and recording data of instrument.
___ Location of underground storage tanks and/or filler caps are shown and labeled

FIELD NOTES - Heading
___ County
___ Highway
___ Parcel number
___ R.O.W. CSJ
___ Construction CSJ

General Description or "preamble"
___ Area of parcel to be acquired is shown in acreage (0.000) for rural land and/or square feet (to nearest whole sq. ft.) for urban land or smaller parcels
Parent tract data is shown:
___ Size of parent tract
___ Survey data or lot, block, and subdivision
___ Name of last recorded seller and buyer
___ Date, volume and page or document number of last recorded conveyance
___ Records and county of last recorded conveyance

Beginning Description
___ Point of commencement is on outside tie and is described accurately by bearings and distances as it leads to the point of beginning.
___ Point of beginning is on proposed R.O.W. line

Particular Description
___ Traverse calls are clockwise sequence
___ Bearings and distances correspond exactly with map, parcel sketch, and traverse sheet
___ Bearings are to nearest whole second and distances are to the nearest one-hundredth of a foot
___ Calls are numbered
___ Denial of access shall be described from beginning to end *(if applicable)*

EXHIBIT "B"
SCOPE OF SERVICES TO BE PROVIDED BY THE ENGINEER

Closing Description

___ Last call leads back to P.O.B.
___ Restates area of parcel
___ Establishes taking in existing road R.O.W. if applicable
___ Legal description is referenced to Plat
___ Sealed and signed
___ Include an access clause whether access is permitted or denied *(if applicable)*

PARCEL SKETCH:

___ Shows P.O.B. and P.O.C.
___ All data corresponds exactly with Map and Field Notes
___ Sheet size is no larger than 81/2" x 11"
___ Plat closely matches example provided
___ Plat referenced to legal description
___ Sealed and signed
___ Include an access clause whether access is permitted or denied *(if applicable)*
___ Existing utility lines and easements (deed reference, if available);

TRAVERSE SHEET

___ Computations show area to be acquired in sq. ft. or acres, whichever is applicable
___ Computations show area that is existing road R.O.W. if applicable
___ Traverse calls are in clockwise sequence
___ Error of closure meets the following:

Secondary rural	.0003
Primary rural - secondary urban	.0002
Urban or industrial	.00013

EXHIBIT "B"
SCOPE OF SERVICES TO BE PROVIDED BY THE ENGINEER

SECTION 6 - FIELD SURVEYING AND PHOTOGRAMMETRY

(Function Code 150)

Services Provided By:
SURVEYOR LPA

DESIGN AND CONSTRUCTION SURVEYS:

PURPOSE:

The purpose of a "design survey" is to provide field information in support of transportation systems design.

The purpose of a "construction survey" is to provide field data in support of highway construction.

DEFINITIONS:

A "design survey" is defined as the combined performance of research, field work, analysis, computation, and documentation necessary to provide detailed topographic (3-dimensional) mapping of a project site. A design survey may include, but need not be limited to, cross-sections or data to create cross-sections and Digital Terrain Models (DTM), horizontal and vertical location of utilities and improvements, detailing of bridges and other structures, review of right-of-way maps, establishing control points, etc.

A "construction survey" is defined as the combined performance of reconnaissance, field work, analysis, computation, and documentation necessary to provide the horizontal and vertical position of specific ground points to be used by the construction contractor for determining lines and grades.

1. Design Surveying

YES N/A

a. Primary Project Control – 3 to 5 miles spacing
Precision shall be 1 part in 20,000 or better, unless otherwise directed by the District Engineer.
(1) Establish horizontal control points
(2) Establish vertical control points

NOTE: ALL BEARING AND DISTANCE SHALL BE BASED ON THE STATE PLANE COORDINATE SYSTEM NAD 1983, SOUTH ZONE. ALL DISTANCES AND COORDINATES SHALL BE SURFACE AND MAY BE CONVERTED TO GRID BY MULTIPLYING BY A COMBINED SCALE FACTOR OF 0.999960

YES N/A

b. Secondary Project Control – Surveyor shall recover and/or reset H&V Control Points as provided by the Engineer and create Survey Control Data Sheets for inclusion in the Construction Project Plans signed and sealed by an R.P.L.S.
(1) No traverse should exceed 25 angle points. Planimetrics shall be 20 ft Lt & Rt from the proposed ROW as per the schematic provided by the Engineer.
(2) The unadjusted angular error should not exceed 2 seconds per angle, plus 14 seconds.
(3) The unadjusted ratio of precision should be one part in 10,000 or better. (The ratio of precision is the total length of the traverse divided by the total error.)
(4) The unadjusted vertical error should not exceed 0.03 foot per mile of traverse.
(5) Project control base lines

N/A N/A

(6) Photogrammetric ground control
(a) Establish horizontal control
(b) Establish vertical control points
(c) Place and maintain control point targets

EXHIBIT "B"
SCOPE OF SERVICES TO BE PROVIDED BY THE ENGINEER

Services Provided By: SURVEYOR	LPA	
YES	N/A	c. Other Design Surveying

(1) **The limit of the Design surveys shall be 1,500-ft before and after the limits of the project as identified by the Project Engineer on the schematic. Establish horizontal and vertical control.** Set H&V Control at 1000-ft intervals along the project proposed right-of-way. Provide x, y, z for each H&V Control. Provide an H&V Control along each outfall identified on the Hydrologic Map. The H&V Control shall be #5 I.R. 2-ft in depth set in concrete. **The surveyor shall provide an H&V Control Book (a Sample shall be provided by the Engineer to the Surveyor).** The Surveyor will provide a 3-pt reference sketch with ties to the BMs for inclusion the existing H&V Control Book. Establish benchmark circuit throughout the project with a tolerance of 0.03'/ft per mile error vertically.

(2) Complete topographic and cross section survey, data processing, and CADD mapping (2D & 3D) for the limits of the project.

(3) Locate all visible utilities, data processing and CADD mapping (2D & 3D) including irrigation lines. Follow sample provided by the Engineer.

(4) Field locate cross culverts, driveway culverts, inverts, irrigation lines, within the project limits, data processing and CADD mapping (2D & 3D).

(5) Right of Entry, Right of Way Research, and Appraisal District Records is the responsibility of the Surveyor.

(6) The Surveyor shall stake the proposed centerline on the existing fields as approved by Engineer before construction for the purpose of utility adjustments and project location.

(7) Profile and cross section intersecting streets for ties into project (1,500-ft. beyond the proposed ROW per schematic and 20-ft wider than the existing ROW of intersecting street.

(8) Cross section irrigation crossings for a distance of 20-ft or advised by ENGINEER beyond the proposed ROW at all breaks in terrain and at 100-ft intervals in a DTM file. Provide a complete description of irrigation appurtances as identified by the engineer sample layout "EXHIBIT E". The SURVEYOR will meet with the ENGINEER before he ties down any irrigation lines. Jointly the SURVEYOR and the ENGINEER will identify from records such as the Irrigation District Maps and the A&M Data of existing irrigation lines that will need to be tied down. The SURVEYOR will follow the sample given to him by the ENGINEER and tie the structures horizontally and vertically and include in the field books to be submitted.

(9) Tie Horizontally and Vertically the existing storm drain system that lies within the existing proposed ROW including the elevation of the outfall of said recovered existing storm drain systems.

(10) Tie to existing underground and overhead utilities (location, elevation and direction)

Horizontally – The surveyor shall call the 1-800 number for the utilities to be marked on the ground as well as any city water and sewer lines. He shall tie all visible utility crossings with name, address and Phone #'s of utility companies. The engineer will coordinate with the utility companies and jointly the Surveyor and the Engineer will identify which utilities were missed and need to be tied down.

Vertically – The engineer shall identify all utilities that are potential conflicts and that need to be tied vertically. The engineer will advise the surveyor in writing of the needed vertical ties and the surveyor will tie the lines vertically once the surveyor has coordinated the exposure and provide the information to the engineer.

EXHIBIT "B"
SCOPE OF SERVICES TO BE PROVIDED BY THE ENGINEER

Services Provided By: SURVEYOR	LPA	
YES	N/A	(11) Cross section and profile all outfall channels identified on the Hydrologic Map for a distance of 200-ft unless advised otherwise by ENGINEER beyond the proposed ROW upstream and downstream at 100-ft intervals. The SURVEYOR will provide a complete 2D/3D File including utilities of the outfalls identified.
		(12) Driveways and Turnouts (a) Inventory commercial entrances, public roads and side streets separately. (b) Obtain centerline station. (Width at ROW, PAV'T and existing radius. (c) Inventory by type (dirt, caliche, gravel or paved). If paved, indicate condition in terms of no patches, has patches or has potholes. (d) Obtain width at R.O.W. line. (e) Obtain elevations at both edges of the driveway or turnout in line with the side drain.
YES	N/A	(13) ROW staking (Existing and Proposed @ 1,000 ft. stations PC's PT's and Angle points as per ROW Map)
N/A	N/A	(14) Soil core hole staking at bridge class structures.
YES	N/A	(15) Determine changes in topography from voids and outdated maps due to development, erosion, etc.
YES	N/A	(16) Profiles of existing drainage facilities.
YES	N/A	(17) Measurement of hydraulic opening under existing bridges.
YES	N/A	(18) Obtain elevations of manholes and valves of utilities
YES	N/A	(19) Provide temporary signs, traffic control, flags, safety equipment, etc.
YES	N/A	(20) Ties to existing bridges railroad rail elevations or culverts that may conflict with new construction.
YES	N/A	(21) Bridge widening top of deck and/or top of cap elevations at the Profile Grade Line (PGL) and the edges of slab at bent locations.
YES	N/A	(22) Inventory signs, mailboxes, and driveways
N/A	N/A	(23) Locate wetlands.
YES	N/A	(24) Locate existing right-of-ways.
		d. Construction Surveys: In performing construction surveys, the following will be requested by the ENGINEER on an as needed basis, but need not be limited to:
N/A	N/A	(1) Stake existing and/or proposed right-of-ways.
N/A	N/A	(2) Stake existing and/or proposed baseline/centerline.
N/A	N/A	(3) Stake proposed bridge structures.
N/A	N/A	(4) Stake proposed drainage structures, such as manholes, culverts, etc.
N/A	N/A	(5) Set grade stakes.
N/A	N/A	(6) Recover and check existing control points.
N/A	N/A	(7) Establish additional control points.
N/A	N/A	(8) Check elevations and locations of structures.
N/A	N/A	(9) Determine and resolve conflicts associated with survey data.

EXHIBIT "B"
SCOPE OF SERVICES TO BE PROVIDED BY THE ENGINEER

Services Provided By: SURVEYOR	LPA	
N/A	N/A	**2. Photogrammetric Products** a. Uncontrolled Photography (1) Contact Prints (2) Mosaics (3) Digital ortho plots b. Mapping (1) Planimetric Maps (2) Contour Maps (3) Cross Sections (4) Profiles (5) Digital Terrain Models (DTM)
		3. UTILITY SUBSURFACE INVESTIGATION: Utility Quality Levels are in cumulative order (least to greatest) as follows
YES	N/A	3.1. Quality Level C - Existing Records: Utilities are plotted from review of available existing records that will be generated by the Engineer on the schematic and provided to the surveyor for his further creation of a Utility Map which will be turned in as a deliverable as part of this work order.
YES	N/A	3.2. Quality Level B - Surface Visible Feature Survey: The Surveyor shall gather the field tied Utility Information and compare it to the existing records (if any) as provided by the Engineer and correlate with surveyed surface-visible features. The surveyor shall create a Utility Layout Map or plan layout 2D, showing the limits of the proposed project and limits of the work area required for this work authorization; including highway stations, limits within existing or proposed right of way. Correlate utility owner records with designating data and resolve discrepancies using professional judgment. A color-coded composite utility facility plan with utility owner names, quality levels, line sizes and subsurface utility locate (test hole) locations. The Layout Map will include all utilities that have been field tied – 2D Horizontal Utilities. This Layout will be provided to the Engineer and a meeting held with Engineer to identify which utilities will need to be tied down vertically. A note must be placed on the designate deliverable only that states "lines sizes are from best available records". All above ground appurtenance locations must be included in the deliverable to the Engineer. This information will be provided in the latest version of Micro Station or Geopak used by the State. The electronic file will be delivered on C.D. or DVD. A hard copy is required and must be signed, sealed, and dated by the Surveyor. Note: Determine and inform the Engineer of the approximate utility depths at critical locations. This depth indication is understood by the Engineer to be approximate only and is not intended to be used for preparing the construction plans.
YES	N/A	3.3. Subsurface Utility Locate (Test Hole) Service (Quality Level A), **THE SURVEYOR SHALL ESTIMATE LOCATING VERICALLY 25 UTILITES PER MILE OR AS IDENTIFIED BY THE ENGINEER.** Locate shall mean to obtain precise horizontal and vertical position, material type, condition, size and other data that may be obtainable about the utility facility and its surrounding environment through exposure by non-destructive excavation techniques that ensures the integrity of the utility facility. Subsurface Utility Locate (Test Hole) Services (Quality Level A) are inclusive of Quality Levels B and C. The Surveyor shall: 3.3.1 Review the requested test hole locations that have been identified by the Engineer and Coordinate with utility owner inspectors as may be required by law or utility owner policy.

EXHIBIT "B"
SCOPE OF SERVICES TO BE PROVIDED BY THE ENGINEER

Services Provided By:
SURVEYOR LPA

3. *Utility Subsurface (continued)*

3.3.2 Measure and record the following data on an appropriately formatted test hole data sheet that has been sealed and dated by the Engineer:

- Elevation of top and/or bottom of utility tied to the datum of the furnished plan.
- Identify a minimum of two benchmarks utilized. Elevations shall be within an accuracy of 15mm (.591 inches) of utilized benchmarks.
- Elevation of existing grade over utility at test hole location.
- Horizontal location referenced to project coordinate datum.
- Outside diameter of pipe or width of duct banks and configuration of non-encased multi-conduit systems.
- Utility facility material(s).
- Utility facility condition.
- Coating/Wrapping information and condition.
- Unusual circumstances or field conditions.

3.3.3 Excavate test holes in such a manner as to prevent any damage to wrappings, coatings, cathodic protection or other protective coverings and features. Water excavation can only be utilized with written approval from the appropriate State District Office.

3.3.4 Back fill all excavations with appropriate material, compact backfill by mechanical means, and restore pavement and surface material. The Engineer shall be responsible for the integrity of the backfill and surface restoration for a period of three years. Install a marker ribbon throughout the backfill.

3.3.5 Provide complete restoration of work site and landscape to equal or better condition than before excavation.

3.3.6 Plot utility location position information on the Utility Layout sheet and identify the vertical elevation and sealed by the responsible Surveyor. This information will be provided in the latest version of Micro Station or Geopak format used by the State. The electronic file will be delivered on C.D or DVD.

4. **DELIVERABLES:**

The deliverables to be specified in individual work authorizations for design surveys and construction surveys may be any combination of the following:

YES	N/A	4.1. Digital Terrain Models (DTM) in a format acceptable by the ENGINEER.
YES	N/A	4.2. Final H&V Field Book Binder with all pertinent information obtained in the field for Design Surveys. Maps, plans, or sketches prepared by the SURVEYOR showing the results of field surveys.
YES	N/A	4.3. Computer printouts or other tabulations summarizing the results of field surveys.
YES	N/A	4.4. Digital files or media acceptable by the ENGINEER containing field survey data.
YES	N/A	4.5. Maps, plats, plans, sketches, or other documents acquired from utility companies, private corporations, or other public agencies, the contents of which are relevant to the survey.
YES	N/A	4.6. Field survey notes, as electronic and/or hard copies.
YES	N/A	4.7. A H&V Control Book identifying the basis of the Primary and Secondary Control and an 8 ½ inch by 11 inch survey control data sheet for each construction control point which shall include, but need not be limited to, a location sketch, a physical description of the point including a minimum of two reference ties, surface coordinates, a surface adjustment factor, elevation, and the horizontal and vertical datums used. Survey control data sheets shall be signed and sealed by the supervising Registered Professional Land Surveyor.

EXHIBIT "B"
SCOPE OF SERVICES TO BE PROVIDED BY THE ENGINEER

Services Provided By: SURVEYOR	LPA	
		4. *Deliverables (continued)*
YES	N/A	4.8. Final mylar set of 11 inch by 17 inch Survey Control data sheets sign and seal by the RPLS per TxDOT guidelines.
YES	N/A	4.9. A digital and/or hard copy of all computer printouts of horizontal and vertical conventional traverses, GPS analysis and results, data including property descriptions with field notes and plats, right-of-way maps, and survey control data sheets to include in the H&V Field Book Binder.
YES	N/A	4.10. Survey reports in a format requested by the ENGINEER.
YES	N/A	4.11. Items indicated under the Automation Requirements Section 6.

5. GENERAL REQUIREMENTS:

5.1. Design surveys and construction surveys shall be performed under the supervision of a Registered Professional Land Surveyor currently registered with the Texas Board of Professional Land Surveying.

5.2. Horizontal ground control used for design surveys and construction surveys, furnished to the SURVEYOR by the ENGINEER or based on acceptable methods conducted by the SURVEYOR, shall meet the standards of accuracy required by the STATE.

5.3. Reference may be made to standards of accuracy for horizontal control traverses, as described in the FGCS Standards and Specifications for Geodetic Control Networks, latest edition, the TxDOT Survey Manual, latest edition, the TxDOT GPS Manual of Practice, latest edition, or the TSPS Manual of Practice for Land Surveying in the State of Texas, as may be applicable.

5.4. Vertical ground control used for design surveys and construction surveys, furnished to the SURVEYOR by the ENGINEER or based on acceptable methods conducted by the SURVEYOR, shall meet the standards of accuracy required by the ENGINEER.

5.5. Reference may be made to standards of accuracy for vertical control traverses, as described in the FGCS Standards and Specifications for Geodetic Control Networks, latest edition, the TxDOT Survey Manual, latest edition, the TxDOT GPS Manual of Practice, latest edition, or the TSPS Manual of Practice for Land Surveying in the State of Texas, as may be applicable.

5.6. Side shots or short traverse procedures used to determine horizontal and vertical locations shall meet the following criteria:

- Side shots or short traverses shall begin and end on horizontal and vertical ground control as described above.
- Standards, procedures, and equipment used shall be such that horizontal locations relative to the control may be reported within the following limits:
- Bridges and other roadway structures: less than 0.1 of one foot.
- Utilities and improvements: less than 0.2 of one foot.
- Cross-sections and profiles: less than 1 foot.
- Bore holes: less than 3 feet.
- Standards, procedures, and equipment used shall be such that vertical locations relative to the control may be reported within the following limits:
- Bridges and other roadway structures: less than 0.02 of one foot.
- Utilities and improvements: less than 0.1 of one foot.
- Cross-sections and profiles: less than 0.2 of one foot.
- Bore holes: less than 0.5 of one foot.

Services
Provided By:
SURVEYOR LPA

5. **AUTOMATION REQUIREMENTS:**

6.1 Planimetric design files (DGN) shall be fully compatible with the State's *Micro Station V8* graphics program without further modification or conversion.

6.2 Electronically collected and processed field survey data files shall be fully compatible with the State's *CADD* systems without further modification or conversion. All files shall incorporate only those feature codes currently being used by the STATE.

6.3 Digital Terrain Models (DTM) shall be fully compatible with the STATE's GEOPAK system without further modification or conversion. All DTM files shall be fully edited and rectified to provide a complete digital terrain model with all necessary break lines.

EXHIBIT "B"
SCOPE OF SERVICES TO BE PROVIDED BY THE ENGINEER

ADDITIONAL RESPONSIBILITIES

A. TRAFFIC CONTROL:

The SURVEYOR shall control traffic in and near surveying operations adequately to comply with provisions of the latest edition of the TxDOT Manual on Uniform Traffic Control Devices – Part VI and the latest edition of the Occupational Safety Manual both of which can be found on the TxDOT internet site.

In the event field crew personnel must divert traffic or close traveled lanes, a Traffic Control Plan based upon principles outlined in the latest edition of the TxDOT Manual on Uniform Traffic Control Devices – Part VI shall be prepared by the SURVEYOR and approved by the ENGINEER prior to commencement of field work. A copy of the approved plan shall be in the possession of field crew personnel on the job site at all times and shall be made available to the ENGINEER for inspection upon request.

B. INVOICING:

Payment requests shall include a SURVEYOR's invoice. With each payment request, the SURVEYOR shall submit a project status report which will, as a minimum, include the percentage of total work complete as of the date of the payment request and a description of current work activity. The percentage of total work complete shall not be based simply on the percentage of funds expended, but shall be based on the best judgment of the SURVEYOR as to the percentage of actual work complete.

C. EASEMENTS, LETTERS OF PERMISSION, ETC.

The SURVEYOR shall be responsible for delineating easements. The SURVEYOR will be responsible for securing the necessary legal instruments and obtaining all Right-of-Entries (ROEs).

D. MEETINGS:

The ENGINEER shall setup the necessary meetings with the SURVEYOR in order to assure all field information is provided on-time and products are delivered in accordance with TxDOT's specifications. SURVEYOR must attend all meetings involving data provided if requested by ENGINEER.

E. PROJECT MANAGER/SURVEYOR COMMUNICATION:

The SURVEYOR shall designate one Texas Registered Professional Land Surveyor (RPLS) to be responsible throughout the project for project surveying coordination and all communications, including billing, with the ENGINEER.

F. OFFICE LOCATION:

The SURVEYOR will perform the services to be provided under this agreement out of a local office and have a crew available to perform requested tasks within 24 hours of request. The coordinating SURVEYOR's Project Manager (RPLS) shall be accessible at all times and working from the local office.

EXHIBIT "B"
SCOPE OF SERVICES TO BE PROVIDED BY THE ENGINEER

SECTION 7 - ROADWAY DESIGN CONTROLS
(Function Code 160)

Services Provided By: ENGINEER	LPA	
		1. Geometric Design
YES	N/A	a. Horizontal and Vertical Alignment
N/A	N/A	b. Schematic Layout
		(1) The location of interchanges, main lanes, grade separations, frontage roads and ramps.
		(2) Develop vertical and horizontal alignment of main lanes, ramps and cross roads at proposed interchanges or grade separations. Frontage road alignment data need not be shown on the schematic; however, it should be developed in sufficient detail to determine ROW needs. The degree of horizontal curves and vertical curve data, including "K" values, shall also be shown for ease of checking.
		(3) For freeways, show the location and text of the proposed main lane guide signs. Lane lines and/or arrows indicating the number of lanes shall also be shown.
		(4) A complete explanation of the sequence and methods of stage construction, if proposed, including the initial and ultimate proposed treatment of crossovers and ramps.
		(5) The tentative ROW limits.
		(a) Provide a roadway Design System (RDS) or (GEOPAK) computer tape of the preliminary earthwork to verify ROW requirements.
		(b) Provide a graphics file containing the approved schematic.
		(6) The geometric (pavement cross slopes, lane and shoulder widths, slope rates for fills and cuts) of the typical sections of proposed highway main lanes, ramps, frontage roads, and cross roads.
		(7) The current and projected traffic volumes as provided by the TxDOT (20 year traffic projection, unless otherwise determined by the District Engineer).
		(8) The control of access lines if Interstate or designated under House Bill 179.
		(9) Direction of traffic flow on all roadways.
		(10) Location and width of median openings for highway without access control.
		(11) The geometric of speed change (acceleration, deceleration, climbing) lanes.
N/A	N/A	2. General Guidelines for Project Development
		a. Prior to preparing detailed plans for a proposed project, a preliminary schematic layout shall be prepared which indicates the general geometric features and location requirements peculiar to the project. An uncontrolled aerial mosaic will be provided for this use. Four copies of the schematic layout shall be submitted through the district to the Design Division for approval and subsequent coordination with the Federal Highway Administration (FHWA) where applicable. The layout shall be submitted for two-lane arterial highway projects on new locations and for all multi-lane highway projects. **No geometric design is to be performed until the COUNTY has given the engineer written approval of the preliminary schematic layout.**
		b. All geometric design shall be in conformance with the State's Design Division, Operations and Procedures Manual, except where variances are permitted in writing by the STATE.
		c. The schematic layout shall include basic information which is necessary for the proper review and evaluation including the items listed above in the checklist for schematic layout.
		d. Handling of traffic during construction shall be a consideration in the development of preliminary designs.

EXHIBIT "B"
SCOPE OF SERVICES TO BE PROVIDED BY THE ENGINEER

Services Provided By: ENGINEER	LPA	
N/A	N/A	2. General Guidelines for Project Development *(continued)*
		e. Upon approval of the schematic layout by Design Division (FHWA on Federal-aid projects), it shall be the basis for an exhibit at any required public hearing prior to final development of the project. If there are any changes to the schematic after the Design Division and FHWA approval and before the public hearing, four copies of the revised schematic, as displayed at the hearing, shall be submitted either prior to or accompanying the public hearing data. If there are no changes in the schematic as displayed at the hearing, only photographs of the schematic and other displays shall be submitted with the public hearing data.
		f. For all freeway construction projects, these schematics shall show the location and text of the proposed main lane guide signs. A schematic layout shall be submitted through the district to the Traffic Operations Division, Traffic Safety Section for approval and subsequent coordination with the FHWA. All signing shall be in conformance with the Texas MUTCD.
		g. On complex projects, informal contact through the district with the Design Division and FHWA personnel is encouraged with regard to development of preliminary design prior to official schematic submission.
		h. The engineer shall furnish a project tape that is compatible with the STATE's computer system, a project listing, and a cross section plot showing the original design sections containing the earthwork input and original cross sections for the project. **Accuracy of the earthwork design is of utmost importance since it is the basis for contractor payments and construction staking.**
N/A	N/A	3. Exhibit for Airway/Highway Clearance Permits
		4. Grading Design
YES	N/A	a. Refine the horizontal and vertical alignment of main lanes, frontage roads, ramps, cross roads and direct connectors based upon the approved schematic layout. Determine vertical clearances at grade separations and overpasses, taking into account the appropriate super elevation rate.
YES	N/A	b. Typical Sections
YES	N/A	c. Design Cross Sections
YES	N/A	d. Determine Cut and Fill Quantities
N/A	N/A	e. Slope Stability Analysis
N/A	N/A	f. Embankment Foundation Stability Analysis
N/A	N/A	g. Embankment Settlement Analysis
		5. Pavement Design
YES	N/A	a. Prior to initiating detailed plan preparations for a project, a preliminary investigation shall be made to determine the approximate section and pavement type to be used for the pavement structure. The Flexible Pavement Design Manual for flexible pavement, "Appendix F" of the Design Division, Operations and Procedures Manual, and the current AASHTO Guide for the Design of Pavement Structures, may be used for this purpose.
YES	N/A	b. The typical section shall also reflect proposed geometric including pavement cross slopes, lane and shoulder widths, and slope rates whenever this data have not been previously shown on a schematic submission.
		c. Embankment and Subgrade
		(1) Soil Core Holes (Show cost estimate with Function Code 110)
YES	N/A	(a) Along center line
N/A	N/A	(b) Along center line of each roadway
		The location and minimum number of soil core holes required for this project are as follows: (To be determined when schematic is being completed)

EXHIBIT "B"
SCOPE OF SERVICES TO BE PROVIDED BY THE ENGINEER

Services Provided By: ENGINEER	LPA	
		5. Pavement Design *(continued)*
		c. Embankment and Subgrade *(continued)*
YES	N/A	(2) Identify,interpret and summarize geologic features that affect engineering design (PI, Sulfate content, % of lime)
N/A	N/A	d. Traffic Data for Pavement Design by STATE
YES	N/A	e. Basic Design Criteria
YES	N/A	f. Life Cycle Cost Analysis(es)
YES	N/A	g. Cost Data
YES	N/A	h. Pavement Material Properties
YES	N/A	i. Rehabilitation Investigations
YES	N/A	(1) Core Hole Survey (Show cost estimate with Function Code 110)
		(a) Determine type and depth of existing material, pavement, etc. The Engineer will determine whether to salvage ACP and FLEXBASE as well as their properties and provide this information to TxDOT.

EXHIBIT "B"
SCOPE OF SERVICES TO BE PROVIDED BY THE ENGINEER

SECTION 8 - DRAINAGE
(Function Code 161)

Services Provided By: ENGINEER	LPA	
		All hydraulic design shall be in accordance with the TxDOT's Hydraulic Manual, except where variances are permitted in writing by the LPA.
		1. Hydrologic Studies, Discharges
N/A	N/A	a. Hydrologic Map showing drainage areas, contours and drainage Q's.
N/A	N/A	b. Drainage area maps showing existing conditions and proposed improvements.
N/A	N/A	c. Hydrologic data/discharge determination
		2. Hydraulic Drainage Study and Documentation
		a. Hydraulic computations
N/A	N/A	(1) Storm water detention available within the ROW (linear ft. along side drain ditch).
N/A	N/A	(2) Storm water detention required outside the ROW (as per HCDD#1)
YES	N/A	(3) Culverts
N/A	N/A	(4) Bridge waterways
YES	N/A	(5) Channels
YES	N/A	(6) Storm sewers/inlets
N/A	N/A	(7) Pump stations
YES	N/A	(8) Storm Water Management facilities
YES	N/A	(9) Other
		(a) Irrigation Canals/Siphons
N/A	N/A	b. Hydraulic report(s)
N/A	N/A	c. Federal Emergency Management Agency (FEMA) floodway requirements
YES	N/A	d. Determine impact of proposed drainage plan on the following receiving stream(s)
		(1) Hidalgo County Drainage District Outfalls
		(2) All Irrigation District Outfalls impacted
		3. Layout, Structural Design and Detailing of Drainage Features
		a. Culverts
YES	N/A	(1) New culverts
YES	N/A	(2) Culvert widening and/or lengthening
YES	N/A	(3) Culvert replacements
		b. Storm sewers
YES	N/A	(1) New storm sewers
YES	N/A	(2) Modify existing storm sewers
YES	N/A	(3) Inlets
YES	N/A	(4) Manholes
YES	N/A	(5) Trunk lines
NO	N/A	c. Pump stations
N/A	N/A	d. Subsurface drainage at retaining walls
N/A	N/A	e. Outfall channel(s) within the ROW
YES	N/A	f. Outfall channel(s) outside the ROW
N/A	N/A	g. Detention Pond(s) within the ROW
N/A	N/A	h. Detention Pond(s) outside the ROW
YES	N/A	i. Summary of Quantities
YES	N/A	j. Storm Water Management facilities
YES	N/A	4. Storm Water Pollution Prevention Plan (SW3P)
NO	N/A	5. Scour Evaluation - Waterway Structures only (to be completed by Bridge Engineer under FC 170.

EXHIBIT "B"
SCOPE OF SERVICES TO BE PROVIDED BY THE ENGINEER

SECTION 9 - SIGNING, MARKINGS AND SIGNALIZATION

(Function Code 162)

Services Provided By: ENGINEER	LPA	
YES	N/A	1. Signing and Markings Layout a. Requirements (Separate Layout) (1) Roadway layout (2) Center line with station numbering (3) ROW lines (4) Culverts and other structures that present a hazard to traffic (5) Location of utilities, if not shown on plan and profile (6) Existing signs to remain, to be removed, to be relocated (7) Proposed signs (illustrated and numbered) (8) Existing overhead sign bridges to remain, to be revised, removed or relocated (9) Proposed overhead sign bridges indicating location by plan layout (electrical details need not be shown on this layout) (10) Proposed markings (illustrated and quantified) which include pavement markings, object markings and delineation (12) Quantities of existing pavement markings to be removed (13) Proposed delineators and object markers b. For projects involving freeway to freeway or other types of directional interchanges, projects including left-hand ramps or connections, the following information must be provided: (1) The location of interchanges, main lanes, grade separations, frontage roads and ramps (2) complete explanation of the sequence and methods of stage construction, where applicable, which would include the initial and ultimate proposed treatment of crossovers and ramps (3) The number of lanes in each section of proposed highway and the location of changes in numbers of lanes (4) The projected traffic volumes as provided by the STATE (20 year traffic projection, unless otherwise determined by the District Engineer) (5) Tentative ROW limits (6) Direction of traffic flow on all roadways (7) Main lane, ramp, frontage road, and necessary cross road profiles at proposed interchanges or grade separations
YES	N/A	2. Summary of Small Signs Tabulation
NO	N/A	3. Summary of Large Signs Tabulation including all Guide Signs
YES	N/A	4. Sign Detail Sheets a. All signs except route markers b. Design details for large guide signs c. Dimensions of letters, shields, borders, corner radii etc. d. Designation of shields attached to guide signs e. Designation of arrow used on exit direction signs

EXHIBIT "B"
SCOPE OF SERVICES TO BE PROVIDED BY THE ENGINEER

Services Provided By: ENGINEER	LPA	
		5. Traffic Signals
		a. Development of Justification (Warrant) Data
YES	N/A	(1) Location Map Relationship of proposed installation to other traffic signals, highways, business areas and traffic generators
YES	N/A	(2) Photographs as appropriate
YES	N/A	(3) Accident data as appropriate
		(4) Vehicle volumes (provided by TxDOT)
YES	N/A	(a) Existing
YES	N/A	(b) Estimated
YES	N/A	(c) Projected
YES	N/A	(d) Pedestrian
YES	N/A	(5) Traffic Survey - Count Analysis
YES	N/A	(6) Recommendation based on above data
YES	N/A	b. Layout
		(1) Title Sheet (when applicable)
		(a) Describe the location
		(b) Type of installation
		(c) Area map with project limits for each location
		(d) Index of sheets
		(e) Space for official signatures
		(2) Estimate and quantity sheet (when applicable)
		(a) List of all bid items
		(b) Bid item quantities
		(c) Specification item number
		(d) Paid item description and unit of measure
		(3) Basis of estimate sheet (list of materials)
		(4) General notes and specification data sheet
		(5) Condition diagram
		(a) Highway and intersection design features
		(b) Roadside development
		(c) Traffic control including illumination
		(6) Plan sheet(s)
		(a) Existing traffic control that will remain (signs and markings)
		(b) Existing utilities
		(c) Proposed highway improvements
		(d) Proposed installation
		(e) Proposed additional traffic controls
		(f) When applicable, proposed conduit for Railroad interconnect with standard details for runs under tracks.
		(g) Proposed illumination attached to signal poles.
		(7) Notes for plan layout
		(8) Elevation sheet(s) (span wire design)
		(9) Phase sequence diagram(s)
		(a) Signal locations
		(b) Signal indications
		(c) Phase diagram
		(d) Signal sequence table
		(e) Flashing operation (normal and emergency)
		(f) Preemption operation (when applicable)
		(g) Interval timing, cycle length and offset

EXHIBIT "B"
SCOPE OF SERVICES TO BE PROVIDED BY THE ENGINEER

Services Provided By: ENGINEER	LPA	
		5. Traffic Signals *(continued)*
YES	N/A	b. Layout *(continued)*
		(10) Construction detail sheets(s)
		(a) Poles (TxDOT standard sheets)
		(b) Detectors
		(c) Pull Box and conduit layout
		(d) Controller Foundation standard sheet
		(11) Marking details (when applicable)
		(12) Barricade and warning sign standard sheet and any special details for work zone traffic control for special conditions
		(13) Aerial or underground interconnect details (when applicable)
		c. General Requirements
		(1) Contact local utility company
YES	N/A	(a) Confirm power source
YES	N/A	(b) Discuss route of aerial or underground interconnect cable (when applicable)
YES	N/A	(c) Adjustment of overhead utility lines
YES	N/A	(2) Prepare governing specifications and special provisions list
YES	N/A	(3) Prepare project estimate
YES	N/A	d. Summary of Quantities

EXHIBIT "B"
SCOPE OF SERVICES TO BE PROVIDED BY THE ENGINEER

SECTION 10 - MISCELLANEOUS (ROADWAY)

(Function Code 163)

Services Provided By: ENGINEER	LPA	
		1. Retaining Walls
		a. Structural Details
N/A	N/A	(1) Cast-in-Place Cantilever at _____ locations. (TxDOT Standard Retaining Wall)*
N/A	N/A	(2) Tiedback Retaining Wall at _____ location. (TxDOT standard retaining wall)
N/A	N/A	(3) Specialized Retaining Wall at _____ locations (Unique Design).*
		b. Alternate Patented Retaining Walls at all locations. (Layouts Only)**
N/A	N/A	(1) Mechanically Stabilized Earth
N/A	N/A	(2) Concrete Block Wall Systems
N/A	N/A	c. Retaining Wall Layout (PLAN)
		(1) Designation of reference line
		(2) Beginning and ending retaining wall stations
		(3) Station of each retaining wall joint***
		(4) Offset from reference line
		(5) Horizontal curve data
		(6) Number of retaining wall panels and lengths***
		(7) Total length of wall
		(8) Indicate face of wall
		(9) All wall dimensions and alignment relations (alignment data as necessary)
		(10) Soil core hole locations
N/A	N/A	d. Retaining Wall Layout (ELEVATION)
		(1) Top of wall elevations at each joint or intervals***
		(2) Existing and finished ground line elevations
		(3) Height of stem at each joint***
		(4) Wall panel designations***
		(5) Top of footing elevations***
		(6) Limits of measurement for payment****
		(7) Type, limits and anchorage details of railing (If applicable)
		(8) Top and bottom of wall profiles and soil core hole data plotted at correct station and elevation. The plot shall be at the same scale as the wall profile. Ground water elevations and the observation date shall be shown.
N/A	N/A	e. Foundation Studies (Show cost estimate with Function Code 110)
N/A	N/A	(1) The soil core holes shall be obtained at approximately 200 foot intervals along retaining wall alignments. The core holes shall extend 25 feet below the footing elevation.
N/A	N/A	f. Stability Analysis (the ENGINEER shall estimate this task as part of his bid to complete the work).
N/A	N/A	g. Estimate
N/A	N/A	h. Summary of Quantities
N/A	N/A	i. Typical X-section.
N/A	N/A	j. General Guidelines for Retaining Walls
		(1) The ENGINEER shall make final design calculations and final detail drawings in accordance with standard requirements of the Texas Department of Transportation. **The designer and checker shall check all calculations and initial each page.**
		(2) The ground water level should be observed at the water strike.
		(3) For purposes of uniformity statewide, soil core hole data shall be shown on layouts as illustrated in the Bridges and Structures Foundation Exploration and Design Manual.
		(4) Foundation exploration shall conform to the requirements set forth in Administrative Circular No. 25-84, Administrative Circular 33-87 and Administrative Circular No. 25-92.

EXHIBIT "B"
SCOPE OF SERVICES TO BE PROVIDED BY THE ENGINEER

Services Provided By: ENGINEER	LPA	
YES	N/A	2. Traffic Control Plan, Detours and Sequence of Construction Traffic Control Plans (TCP) are required for all projects. A detailed TCP shall be developed when traffic handling during construction involves complications for which a feasible solution is not covered by the Texas MUTCD or the current Barricade and Construction (BC) Standards. The following items are required on all Traffic Control Plan Layouts: a. The sequence of construction and method of handling traffic during each phase. b. The existing and proposed traffic control devices that will be used to handle traffic during each construction sequence. Include signals, regulatory signs, warning signs, construction warning signs, guide signs, route markers, construction pavement markings, channelizing devices, portable changeable message signs, flashing arrow boards, barricades, barriers, etc. c. The proposed traffic control devices (stop signs, signals, flag person, etc.) at grade intersections during each construction sequence. d. Where detours are provided, typical cross sections shall be shown. e. Road construction work hours shall be developed after an investigation of the traffic volumes has been performed.
		3. Illumination
N/A	N/A	a. Preliminary Roadway Illumination Layout and Circuit Layout (1) For projects involving freeway to freeway or other types of directional interchanges and projects including left-hand ramps or connections, provide the following: (a) The location of interchanges, main lanes, grade separations, frontage roads and ramps (b) A complete explanation of the sequence and methods of stage construction, where applicable, which would include the initial and ultimate proposed treatment of crossovers and ramps (c) The number of lanes in each section of proposed highway and the location of changes in the number of lanes (d) The projected traffic volumes as provided by the STATE (20 year traffic projection unless otherwise determined by the district engineer) (e) Tentative ROW limits (f) Direction of traffic flow on all roadways (g) Main lane, ramp, frontage road, and necessary cross road profiles at proposed interchanges or grade separations
N/A	N/A	b. Final Roadway Illumination and Electrical Circuit Layouts (1) Roadway layout showing pavement edges, shoulders, curbs, retaining walls, etc. (2) Center line with station numbering. (3) ROW lines. (4) Symbol legend. Use department standard symbols for lighting and electrical. (5) Culverts and other structures that present a hazard to traffic. (6) Location of underground utilities, if not shown on plan profile. (7) Location of overhead electrical lines, both crossing and parallel to ROW. (8) Existing sign lighting circuits and roadway illumination to remain, to be removed, to be relocated. (9) Existing service poles, electrical circuits, ground boxes, etc. (10) Contact electric utility for service pole locations, voltage characteristics. (11) Location of proposed sign lighting circuits and roadway illumination. (12) Proposed electrical circuits. (13) Tabulation of all quantities including proposed, existing to be relocated, existing to be removed. The layout sheet quantities and lighting summary shall be shown. Tabulations to include estimated quantity with a column for final quantities.

EXHIBIT "B"
SCOPE OF SERVICES TO BE PROVIDED BY THE ENGINEER

Services Provided By: ENGINEER	LPA	
		3. Illumination *(continued)*
N/A	N/A	c. General Guidelines for Illumination (If applicable) The ENGINEER shall submit to the COUNTY, well in advance of PS&E due date, the roadway illumination and electrical circuit layout sheets for review by the STATE. Two copies of the layout sheets are to be submitted. One copy will be returned to the Engineer showing corrections that are to be made by the ENGINEER. When final plan submission is made, the ENGINEER shall provide a written statement regarding completion of the corrections.
		4. Miscellaneous Drafting/Standards
YES	N/A	a. Erosion Control
N/A	N/A	b. Landscape Development
YES	N/A	5. Compute and Tabulate Quantities
YES	N/A	6. Special Utility Details (Irrigation lines)
		7. Miscellaneous Structures
		a. Type of Structure*
		(1) Overhead Sign Bridges (O.S.B.) Modifications or special O.S.B. designs shall be prepared using the same design assumptions that are used for the standard O.S.B structures.
N/A	N/A	(a) New O.S.B. structure(s)
N/A	N/A	(b) Structural evaluation of existing O.S.B. structure(s) that are to remain in place or to be relocated.
N/A	N/A	(2) High Mast Illumination Poles (HMIP)
YES	N/A	(3) Traffic Signal Supports
N/A	N/A	(4) Conventional Illumination Poles
N/A	N/A	(5) Sound Barrier Walls
N/A	N/A	b. Checklist for Layouts
		(1) Reference appropriate O.S.B. standard
		(2) Drilled shaft size and length
		(3) Soil strength used for design {indicate basis and boring(s) used}
		(4) Design height
		(5) Tower heights
		(6) Leg spacings
		(7) Design wind speed
YES	N/A	c. Foundation Studies (Show cost estimate with Function Code 110) The soils exploration requirements for miscellaneous structures on this project are as follows: (To be provided by the Engineer on an as-needed basis)
		8. Agreements
N/A	N/A	a. Utility Agreements
N/A	N/A	b. Exhibits for Utility Agreements
N/A	N/A	c. Railroad Agreements
		d. Railroad Exhibits
N/A	N/A	(1) Railroad Underpasses
N/A	N/A	(2) Railroad Overpasses
N/.A	N/A	(3) Railroad Grade Crossing (Replanking)
N/A	N/A	(4) Railroad Grade Crossing Warning Systems (Signals)
N/A	N/A	(5) Other Miscellaneous Sketches for Railroads
N/A	N/A	e. Traffic Signal Agreements
N/A	N/A	f. Exhibits for Traffic Signal Agreements
YES	N/A	9. Estimate
YES	N/A	10. Specifications and General Notes

EXHIBIT "B"
SCOPE OF SERVICES TO BE PROVIDED BY THE ENGINEER

ADDITIONAL RESONSIBILITIES

Easements, Letters of Permission, Etc.

The ENGINEER shall be responsible for delineating easements. The ENGINEER will be responsible for securing the necessary legal instruments.

Coordination of Utilities

The ENGINEER shall furnish the LPA prints of a project layout which will be distributed by ENGINEER to various utility companies to determine which utilities are in the limits of the project. These shall be preliminary layouts. Upon completion of the preliminary drainage plans and U&D sheets, the ENGINEER shall distribute to the various utility companies and request return. Upon return of these prints, the ENGINEER will schedule a meeting with the various utility companies to discuss potential conflicts and conformance with the State's Utility Accommodation Policy. The ENGINEER is responsible for coordination with the various utility companies for exposing potential conflicts and field ties to uncover utilities in potential conflict areas.

Meetings

Meetings will be held with the FHWA, State Officials, local governments, property owners, utility owners, railroad companies, other consulting firms, etc., as needed or required by the LPA. The ENGINEER shall coordinate through the LPA for the development of this project with any local entity having jurisdiction or interest in the project (i.e., city, county, etc).

Specifications, Special Provisions, Special Specifications

Use the State's standard specifications or previously approved special provisions and/or special specifications. If a special provision and/or special specification is developed for this project, it shall be in the State's format and incorporate references to approved State test procedures.

Project Manager/Engineer Communication

The ENGINEER shall designate one Texas Registered Professional Engineer to be responsible throughout the project for project management and all communications, including billing, with the LPA's Director. Any replacements to the ENGINEER's designated Project Manager/Engineer must be approved by the LPA.

Engineering documents produced for the department's engineering projects shall be signed, sealed and dated or CADD sealed in accordance with Administrative Order No. 5-89 and Administrative Circular No. 26-91.

Design Responsibilities

The ENGINEER is responsible for design errors and/or omissions that become evident before, during or after construction of the project. The ENGINEER's responsibility for all questions arising from design errors and/or omissions will be determined by the LPA and all decisions shall be final and binding. This would include, but not necessarily be limited to:

1. All design errors and/or omissions resulting in additional design work to correct the errors and/or omissions.
2. Preparation of design documents and detail drawings necessary for a field change due to design errors and/or omissions.
3. Revision of original tracings to the extent required for a field change due to design errors and/or omissions.

The ENGINEER shall promptly make necessary revisions or corrections resulting from the ENGINEER's errors, omissions or negligent acts without additional compensation. Acceptance of the work by the LPA will not relieve the ENGINEER of the responsibility for subsequent correction of any such errors or omissions or for clarification of any ambiguities.

EXHIBIT "B"
SCOPE OF SERVICES TO BE PROVIDED BY THE ENGINEER

Document and Information Exchange

Data, Plan Sheets, General Notes and/or Specifications provided to the LPA shall be furnished on 8GB USB flash drives. Each 8 GB flash drive shall have a file titled Table of Contents. The Table of Contents shall indicate the locations of files within the directory structure of the documentation.

General Notes and specifications shall be provided in MS Office 2007 format. Plan sheets shall be provided in Microstation DGN or GEOPAK GPK format. PDF copies of plan sheets shall also be provided.

Two copies of the documentation shall be provided to the LPA.

If required, the ENGINEER shall provide to the LPA, a CD that contains all the plan sheets for the project. The graphics tape shall be compatible with the LPA's computer system.

CD Tape Required (YES or NO): YES

Proposal Time

The time indicated in the proposal and the contract shall include time necessary for reviews, approval, etc.

Office Location

The ENGINEER will perform the services to be provided under this agreement out of their office or offices listed below:

Service	Office Location
PS&E	Mission Office

The work effort will be managed out of the Mercedes (City)

office located at 2100 West Expressway 83 (Address),

Mercedes (City), Texas (State).

EXHIBIT "C"
WORK SCHEDULE
Veterans Boulevard (SH 495) Project
From La Homa Rd. (SH 364) to Abram Rd. (2.26 Miles)

TASK AND DESCRIPTION	FIRM	2016																2017												2018			2019		
		OCT	NOV	DEC	JAN	FEB	MAR	APR	MAY	JUN	JULY	AUG	SEP	OCT	NOV	DEC	JAN	FEB	MAR	APR	MAY	JUN	JUL	AUG	SEP	OCT	NOV	DEC	JAN-APR	MAY-AUG	SEP-DEC	JAN-APR	MAY-AUG	SEP-DEC
WORK AUTHORIZATION NO. 1																																		
Phase I: EA, PUBLIC INVOLVEMENT, SCHEMATIC (from La Homa Rd. to Abram Rd.)																																		
Pre-design Meeting with TxDOT																																		
Develop Alternatives & Matrix	L&G																																	
Develop & Submit Schematic	L&G																																	
TxDOT Review																																		
Advertise & Conduct Public Meeting	L&G																																	
Select TPA	L&G																																	
Revise & Submit Final Schematic for FHWA approval	L&G																																	
FHWA/TxDOT Review & Revisions	TxDOT																																	
TxDOT Schematic Approval	TxDOT																																	
FHWA Schematic Approval	FHWA																																	
Process Technical Reports	TxDOT																																	
Agency Coordination	TxDOT																																	
Administratively Complete Document	TxDOT																																	
Opportunity for Public Hearing	TxDOT																																	
Environmental Decision	TxDOT																																	
Hydrological Map	L&G																																	
Preliminary Compensable Utilities	L&G																																	
WORK AUTHORIZATION NO. 2																																		
Phase II: PS&E, CONSTRUCTION OVERSIGHT																																		
Design Field Surveys	L&G																																	
PS&E Development	L&G																																	
Geotechnical Soil and Scour Reports	L&G																																	
Permitted Utility Coordination	L&G																																	
ROW Map	L&G																																	
Construction	TxDOT																																	
Construction Management	L&G																																	
WORK AUTHORIZATION NO. 3																																		
Phase III: ROW Acquisition																																		
ROW Acquisition Services	TxDOT																																	
Compensable Utility Management	TxDOT																																	
Compensable Utilities	L&G																																	

9:14 AM5/25/2017

Exhibit "D"
BUDGET
LUMP SUM RATE BASIS OF PAYMENT

Work Authorization No.___

	A	B	C	D	E	F	G	H	I	J	K
1	Highway: Veterans Boulevard Project						R.O.W. Surveying Services, L.L.C.				
2	County: Hidalgo County, Texas										
3	From: Abram Road to La Homa Road (2.3 Miles)										
4	Description of Work: ROW Map and Design Survey										
5	TASK AND DESCRIPTION	Survey		Survey	4-man	3-man	2-man		Admin/	Total	Cost
6	FC 130 ROW Map / FC 150 Field Surveying	PM	RPLS	Technician	Survey Crew	Survey Crew	Survey Crew	SUE/per unit	Clerical	Hours	
7	HOURLY RATE	$124.00	$125.00	$82.00	$175.00	$155.00	$130.00	$500.00	$50.00		
8	PHASE I - FC 130 (ROW MAP) Lump Sum per Parcel										
9	A. ROW Map, Parcel Description, Metes and Bounds Desceiption, and Title Reports (75 parcels @ $3,250.00/parcel)										
10	FC 130 Subtotal Cost - Phase I										$ 243,750.00
11	PHASE I - FC 150 Field Surveying (Control Hz & Vt)										
12	A. Primary Project Control										
13	a. Establish Primary Control	4	5	3	0	16	0	0	0	28	$ 3,347.00
14											
15	B. Secondary Project Control										
16	a. Set additional secondary control points as needed	0	0	8	0	8	0	0	0	16	$ 1,896.00
17	b. Horizontal values established with RTK or VRS	0	0	8	0	8	0	0	0	16	$ 1,896.00
18	c. Vertical values established with digital level	0	0	8	0	0	24	0	0	32	$ 3,776.00
19	Subtotal Hours	4	5	27	0	32	24	0	0	92	
20	Subtotal Cost - Phase I	$496.00	$625.00	$2,214.00	$0.00	$4,960.00	$3,120.00	$0.00	$0.00		$ 11,415.00
21	PHASE 2 - DTM Topography and Cross sections										
22	C. Setting Benchmarks										
23	1. Setting Benchmarks @ 1000'(ft) intervals (App. Count 20)	0	0	0	0	24	0	0	0	24	$ 3,720.00
24	2. Bench Loop-Vertical Values by Digital Level	0	0	0	0	40	0	0	0	40	$ 6,200.00
25											$ -
26	D. Topography / Design Survey										$ -
27	1. From Abram to La Homa and 10' Outside of Proposed Right of Way	0	0	0	0	140	0	0	0	140	$ 21,700.00
28	2. Drainage Ooutfalls	0	0	0	0	40	0	0	0	40	$ 6,200.00
29	3. Irrigation Canals	0	0	30	0	20	0	0	0	50	$ 5,560.00
30											$ -
31	E. Utilities										$ -
32	1. Visible Utilites	0	0	2	0	20	0	0	0	22	$ 3,264.00
33	2. Utility Coordination and Locates	5	5	15	0	0	0	0	20	45	$ 3,475.00
34											$ -
35	F. Miscellaneous										$ -
36	1. Additional Field Surveying (Safety Equipment, Traffic Control for Field Crews,	0	5	20	0	16	0	0	15	56	$ 5,495.00
37	2. R.O.W. Restaking	0	0	0	0	24	0	0	0	24	$ 3,720.00
38	3. Right of Entry to Landowners	0	5	0	0	0	0	0	24	29	$ 1,825.00
39	4. Subsurface Utility Reports/ Data Sheets									0	$ -
40	Subtotal Hours	5	15	67	0	324	0	0	59	470	
41	Subtotal Cost - Phase 2	$620.00	$1,875.00	$5,494.00	$0.00	$50,220.00	$0.00	$0.00	$2,950.00		$ 61,159.00
42	PHASE 3- SUBSURFACE UTILITY ENGINEERING										
43	1. Hydro Excavation SUE Level A (45 holes at $500 each)	0	0	0	0	0	0	45	0	45	
44		$0.00	$0.00	$0.00	$0.00	$0.00	$0.00	$22,500.00	$0.00	0	$ 22,500.00
45	Total Cost-Phase 3	$0.00	$0.00	$0.00	$0.00	$0.00	$0.00	$22,500.00	$0.00	45	$ 22,500.00
46	PHASE 4 - FINAL REPORT & DELIVERABLES										
47	A. CADD file (2D & 3D) for limits of project	0	0	30	0	0	0	0	8	38	$ 2,860.00
48	B. Final Report and Deliverables	12	12	12	0	0	0	0	8	44	$ 4,372.00
49	Subtotal Hours	12	12	42	0	0	0	0	16	82	
50	Subtotal Cost - Phase 4	$1,488.00	$1,500.00	$3,444.00	$0.00	$0.00	$0.00	$0.00	$800.00		$ 7,232.00
51	PROJECT MANAGEMENT & OVERSIGHT										
52	A. Meeting & Coordination w/ Engineers	12	12	0	0	0	0	0	16	40	$ 3,788.00
53	B. QC/QA Survey	12	12	0	0	0	0	0	16	40	$ 3,788.00
54	Subtotal Hours	24	24	0	0	0	0	0	32	64	
55	Subtotal Cost - PM & Oversight	$2,976.00	$3,000.00	$0.00	$0.00	$0.00	$0.00	$0.00	$1,600.00	0	$7,576.00
56	**Total Fee FC 150**	**$5,580.00**	**$7,000.00**	**$11,152.00**	**$0.00**	**$55,180.00**	**$3,120.00**	**$22,500.00**	**$5,350.00**	0	**$109,882.00**
57	**Total Fee FC 130 & FC 150**										**$353,632.00**

ERGONOMIC TRANSPORTATION SOLUTIONS, INC.
5300 Hollister, Suite 220
Houston, Texas 77040
Tel. (713) 956-9601
Fax: (713) 956-9667

EXHIBIT D-1

May 24, 2017

Mr. Jacinto Garza, P.E.,
President
L & G Engineering
2100 W. Expressway 83
Mercedes, Texas 78570

Reference: Traffic Engineering Services for
Veterans Boulevard (FM 495) - from North Abram Road to La Homa Road

Dear Jacinto:

We are pleased to submit the attached fee proposal to conduct the referenced services. Our work will cover the following:

Traffic signal warrant studies at five intersections:

- Veterans Boulevard at North Abram Road
- Veterans Boulevard at East Goodwin Road
- Veterans Boulevard at Goodwin Acres Drive
- Veterans Boulevard at Minnesota Road South
- Veterans Boulevard at Minnesota Road North

Traffic signal designs at three intersections:

- Veterans Boulevard at FM 492 (Permanent and Temporary Signals)
- Veterans Boulevard at Bentsen Palm Drive (Permanent and Temporary Signals)
- Veterans Boulevard at La Homa Road (Permanent and Temporary Signals)

Flashing Beacon Designs at three intersections:

- Veterans Boulevard at North Abram Road
- Veterans Boulevard at East Goodwin Road
- Veterans Boulevard at Goodwin Acres Drive
- Veterans Boulevard at Minnesota Road South
- Veterans Boulevard at Minnesota Road North

Attachments

Our proposed fee for the Warrant Studies is $35,000.00 and for the signal and flashing beacon designs is $87,000.00. Exhibit A shows the proposed services.

As always we thank you for giving us the opportunity to assist you.

Sincerely,

Harry C. Simeonidis, P.E.,
President

Attachments

EXHIBIT D-1

ESTIMATED MAN-HOUR BREAKDOWN

VETERANS BOULEVARD PROJECT
(from Abram Road to La Homa Road (SH 364))

		MANHOURS									
		Senior Project Manager	Senior Engineer	Senior Environmental Scientist /Specialist	Project Engineer	Senior Engineer Tech	CADD Operator / GIS Analyst	Admin / Clerical	TOTAL HOURS	Sub-Contract Amounts / ROW COST	TOTAL LINE ITEM COST
CONTRACT RATE		218.04	180.66	152.63	133.94	93.45	68.53	62.30			
WORK AUTHORIZATION NO. 2											
PHASE II - SURVEYS & ROW MAP											
1	Field Surveys for Design and Construction	20		50	50		60	3.49	183.49	$ 87,382.00	$ 23,018.53
2	Complete ROW Map (Estimated 75 Parcels)	60		84	135.46		65	4	348.46	$ 243,750.00	$ 48,750.48
3	PS&E Development Roadway	200	340	100	1135	2000	2082	9.69	5866.69	$ 122,000.00	$ 602,500.45
4	Subsurface Utility Engineering (SUE) (Estimated 20 non destructive holes per mile)	6		10	10		9	4.97	39.97	$ 22,500.00	$ 5,100.34
5	Engineering Fee to Create 1 set of Plans and Submit through TxDOT	20	20	20	200	196	140	4.42	600.42		$ 66,000.37
6	Permitted Utilites Coordination to adjust	40	100	20	300	201	156	20.93	837.93		$ 100,800.27
SUB-TOTAL		**346**	**460**	**284**	**1830.46**	**2397**	**2512**	**47.5**	**7876.96**	**$ 475,632.00**	**$ 846,170.43**

Sub-Total Manhours Fee with Subconsultant Fee:	$ 1,321,802.43
*** TOTAL PROJECT FEE:**	**$ 1,321,800.00**

*Rounded Figure

L&G Engineering
Transportation Consultants

May 25, 2017

The Honorable Joe Flores
Commissioner, Hidalgo County Pct. No. 3
702 Breyfogle
Mission, Texas 78572

RE: Veterans Blvd. Project - Work Authorization No. 2
Limits: from IH2 (US83) La Homa Road (SH 364)

Dear Commissioner Flores:

As discussed, attached in duplicate for your review and approval is Work Authorization No. 2 and Supplemental No. 1 to the Agreement for the Veterans Boulevard project.

Supplemental No. 1 to the Agreement is to extend the project limits as requested by the Texas Department of Transportation, to include the section from IH-2 (US83) on Abram Road North to Veterans Blvd. (approximately 0.2 Miles).

Work Auth. No. 2 is in the amount of $1,321,800.00 to provide the PS&E, Surveys, Right-of-Way Map and Permitted Utility Coordination for the Phase II of this project. The following is the funding breakdown for the Engineer's and Sub-Consultants proposed fees associated with this Work Authorization.

- L&G Engineering (*PRIME*) ..... $ 846,150.00
- ROW Surveying Services, LLC. (*SUB-CONSULTANT*) ..... $ 353,632.00
- Ergonomic Transportation Systems, Inc. (ETSI) (*SUB-CONSULTANT*) ... $ 122,000.00

TOTAL $1,321,800.00

Attached you will find the following:

1.) Two (2) signed originals of Supplemental No. 1 to Agreement for Professional Services.

2.) Two (2) signed originals of Work Authorization No. 2 with the following attachments:
- Project Location Map
- Exhibit A "Services to be provided by the Owner"
- Exhibit B " Services to be provided by the Engineer"
- Exhibit C "Work Schedule"
- Exhibit D-1 "Estimated Man-hour Breakdown"
- Exhibit D-1 " R.O.W.S.S. Fee Schedule"
- Exhibit D-1 "ETSI Traffic Signal Design and Warrant Studies Fee Schedule"

2100 W. Expressway 83 • Mercedes, TX 78570 • Office (956) 565-9813 • Fax (956) 565-9018
900 S. Stewart Rd., Ste. 9 • Mission, TX 78572 • Office (956) 585-1909 • Fax (956) 585-1927

We would also like to advise you that we will be using the Sub-Consultants listed below for this Work Authorization.

Field Surveying/ROW Mapping:
Mr. Julio Cerda, P.E.
R.O.W. Surveying Services, LLC.
900 S. Stewart Road, Ste. 13
Mission, Texas 78572
Phone (956)-424-3335

Traffic Warrants/Signal Design:
Mr. Harry Simeonidis, P.E.
ETSI
5300 Hollister Road, Ste. 220
Houston, Texas 77040
Phone (713) 956-9601

Should you have any questions regarding this submittal, do not hesitate to call me at (956) 565-9813.

Sincerely,

Jacinto Garza, P.E.
CEO/Project Manager

Attachments

CERTIFICATE OF INTERESTED PARTIES

FORM 1295

Complete Nos. 1 - 4 and 6 if there are interested parties.
Complete Nos. 1, 2, 3, 5, and 6 if there are no interested parties.

OFFICE USE ONLY
CERTIFICATION OF FILING

Certificate Number:
2017-214513

Date Filed:
05/26/2017

Date Acknowledged:
05/26/2017

1 Name of business entity filing form, and the city, state and country of the business entity's place of business.

L&G Consulting Engineers, Inc.
Mercedes , TX United States

2 Name of governmental entity or state agency that is a party to the contract for which the form is being filed.

Hidalgo County

3 Provide the identification number used by the governmental entity or state agency to track or identify the contract, and provide a description of the services, goods, or other property to be provided under the contract.

C-15-161-11-17
Work Authorization No. 2 - Veterans Blvd - Phase II, Suppl. No. 1 to Main Agreement Veterans Blvd from IH2 to La Homa

4 Name of Interested Party	City, State, Country (place of business)	Nature of interest (check applicable)	
		Controlling	Intermediary
Sandoval, Armando	Mercedes , TX United States		X
Garza , Jacinto	Mercedes , TX United States	X	

5 Check only if there is NO Interested Party. ☐

6 AFFIDAVIT

I swear, or affirm, under penalty of perjury, that the above disclosure is true and correct.

_____
Signature of authorized agent of contracting business entity

AFFIX NOTARY STAMP / SEAL ABOVE

Sworn to and subscribed before me, by the said _____, this the _____ day of _____, 20_____, to certify which, witness my hand and seal of office.

_____ _____ _____
Signature of officer administering oath | Printed name of officer administering oath | Title of officer administering oath

CERTIFICATE OF INTERESTED PARTIES

FORM 1295

Complete Nos. 1 - 4 and 6 if there are interested parties.
Complete Nos. 1, 2, 3, 5, and 6 if there are no interested parties.

OFFICE USE ONLY
CERTIFICATION OF FILING

Certificate Number:
2017-214513

Date Filed:
05/26/2017

Date Acknowledged:

1 Name of business entity filing form, and the city, state and country of the business entity's place of business.
L&G Consulting Engineers, Inc.
Mercedes , TX United States

2 Name of governmental entity or state agency that is a party to the contract for which the form is being filed.
Hidalgo County

3 Provide the identification number used by the governmental entity or state agency to track or identify the contract, and provide a description of the services, goods, or other property to be provided under the contract.
C-15-161-11-17
Work Authorization No. 2 - Veterans Blvd - Phase II, Suppl. No. 1 to Main Agreement Veterans Blvd from IH2 to La Homa

4 Name of Interested Party	City, State, Country (place of business)	Nature of interest (check applicable)	
		Controlling	Intermediary
Sandoval, Armando	Mercedes , TX United States		X
Garza , Jacinto	Mercedes , TX United States	X	

5 Check only if there is NO Interested Party. ☐

6 AFFIDAVIT

I swear, or affirm, under penalty of perjury, that the above disclosure is true and correct.

MARIE CRUZ BUSTAMANTE
Notary Public, State of Texas
Comm. Expires 04-14-2021
Notary ID 126868488

AFFIX NOTARY STAMP / SEAL ABOVE

Signature of authorized agent of contracting business entity

Sworn to and subscribed before me, by the said Jacinto Garza, this the 26th day of May, 20 17, to certify which, witness my hand and seal of office.

Marie C. Bustamante — Marie C. Bustamante — Exec. Admin.

Signature of officer administering oath | Printed name of officer administering oath | Title of officer administering oath

AI-59931 **Purchasing Department** **22. D. 2.**

CC - REGULAR

Meeting Date: 05/30/2017

Submitted For: Marty Salazar, PURCHASING DEPT.

Submitted By: Rocio Villarreal, PURCHASING DEPT.

Department: PURCHASING DEPT.

Information

CAPTION

Requesting approval of a professional appraisal services agreement with CruzBro RGV, LLC dba The Real Estate Center for the purposes of appraisal services for: The Fair Market Value Appraisals in connection with the Acquisition of Land-Sale and/or Exchange, Rights of Way, Easements, Condemnations and Disposition of County owned Property located within Hidalgo County Precinct No. 3 (on an as needed basis) and as selected for negotiations by CC from the "POOL" of Appraisers by CC on 2/21/17.

BACKGROUND

Fiscal Impact

Attachments

LEGAL REVIEW

FORM 1295

C-17-102-03-21-CRUZBRO RGV DBA THE REAL ESTATE CENTER

Form Review

Inbox	Reviewed By	Date
Final Approval	Monica Salinas	05/26/2017 02:58 PM

Form Started By: Rocio Villarreal Started On: 05/19/2017 03:18 PM

Final Approval Date: 05/26/2017

Zimbra **rocio.villarreal@co.hidalgo.tx.us**

RE: C-17-102-03-21-The Real Estate Center-Appraisal Services-Pct 3

From : Steve Crain <scrain@atlashall.com> Thu, May 18, 2017 11:38 AM
Subject : RE: C-17-102-03-21-The Real Estate Center-Appraisal Services-Pct 3
To : 'Rocio Villarreal' <rocio.villarreal@co.hidalgo.tx.us>

The contract is OK.

From: Rocio Villarreal [mailto:rocio.villarreal@co.hidalgo.tx.us]
Sent: Thursday, May 18, 2017 11:02 AM
To: Steve Crain <scrain@atlashall.com>
Subject: Re: C-17-102-03-21-The Real Estate Center-Appraisal Services-Pct 3

Mr. Crain:
Please review and approve as to form.

Thank you.

ROCIO VILLARREAL
HIDALGO COUNTY PURCHASING DEPT.
CONTRACTS MANAGER
(956) 318-2626 Work
(956) 292-7000 Ext. 4868 Work
rocio.villarreal@co.hidalgo.tx.us
2812 S. Business Hwy 281
Edinburg, Texas 78539

From: "Steve Crain" <scrain@atlashall.com>
To: "Rocio Villarreal" <rocio.villarreal@co.hidalgo.tx.us>
Sent: Friday, March 10, 2017 9:18:20 AM
Subject: RE: C-17-102-03-21-The Real Estate Center-Appraisal Services-Pct 3

The name on the contract is not a legal name and does not match the name on the insurance certificate.

From: Rocio Villarreal [mailto:rocio.villarreal@co.hidalgo.tx.us]
Sent: Friday, March 10, 2017 8:57 AM

To: Steve Crain <scrain@atlashall.com>
Subject: C-17-102-03-21-The Real Estate Center-Appraisal Services-Pct 3

Mr. Crain:

Please review and approve as to form.

Thank you.

ROCIO VILLARREAL
HIDALGO COUNTY PURCHASING DEPT.
CONTRACTS MANAGER
(956) 318-2626 Work
(956) 292-7000 Ext. 4868 Work
rocio.villarreal@co.hidalgo.tx.us
2812 S. Business Hwy 281
Edinburg, Texas 78539

CERTIFICATE OF INTERESTED PARTIES

FORM 1295

Complete Nos. 1 - 4 and 6 if there are interested parties.
Complete Nos. 1, 2, 3, 5, and 6 if there are no interested parties.

OFFICE USE ONLY
CERTIFICATION OF FILING

Certificate Number:
2017-176800

Date Filed:
03/09/2017

Date Acknowledged:

1 Name of business entity filing form, and the city, state and country of the business entity's place of business.

Cruzbro RGV LLC, dba The Real Estate Center
McAllen, TX United States

2 Name of governmental entity or state agency that is a party to the contract for which the form is being filed.

Hidalgo County

3 Provide the identification number used by the governmental entity or state agency to track or identify the contract, and provide a description of the services, goods, or other property to be provided under the contract.

No. C-17-102-03-21
Real Estate Appraisals and Review Appraisals

4 Name of Interested Party	City, State, Country (place of business)	Nature of interest (check applicable)	
		Controlling	Intermediary

5 Check only if there is NO Interested Party. [X]

6 AFFIDAVIT

I swear, or affirm, under penalty of perjury, that the above disclosure is true and correct.

NOTARY PUBLIC STATE OF TEXAS
DIANA S LUNA
My Commission Expires
October 10, 2018

Signature of authorized agent of contracting business entity

AFFIX NOTARY STAMP / SEAL ABOVE

Sworn to and subscribed before me, by the said Rene De La Cruz, this the 9th day of March, 20 17, to certify which, witness my hand and seal of office.

Diana S. Luna Notary

Signature of officer administering oath | Printed name of officer administering oath | Title of officer administering oath

CERTIFICATE OF INTERESTED PARTIES

FORM 1295

Complete Nos. 1 - 4 and 6 if there are interested parties.
Complete Nos. 1, 2, 3, 5, and 6 if there are no interested parties.

OFFICE USE ONLY
CERTIFICATION OF FILING

Certificate Number:
2017-176800

Date Filed:
03/09/2017

Date Acknowledged:
03/09/2017

1 Name of business entity filing form, and the city, state and country of the business entity's place of business.

Cruzbro RGV LLC, dba The Real Estate Center
McAllen, TX United States

2 Name of governmental entity or state agency that is a party to the contract for which the form is being filed.

Hidalgo County

3 Provide the identification number used by the governmental entity or state agency to track or identify the contract, and provide a description of the services, goods, or other property to be provided under the contract.

No. C-17-102-03-21
Real Estate Appraisals and Review Appraisals

4 Name of Interested Party	City, State, Country (place of business)	Nature of interest (check applicable)	
		Controlling	Intermediary

5 Check only if there is NO Interested Party. [X]

6 AFFIDAVIT

I swear, or affirm, under penalty of perjury, that the above disclosure is true and correct.

_____
Signature of authorized agent of contracting business entity

AFFIX NOTARY STAMP / SEAL ABOVE

Sworn to and subscribed before me, by the said _____, this the _____ day of _____, 20_____, to certify which, witness my hand and seal of office.

_____ _____ _____
Signature of officer administering oath | Printed name of officer administering oath | Title of officer administering oath

THE STATE OF TEXAS §
§
COUNTY OF HIDALGO §

PROFESSIONAL SERVICES CONTRACT
C-17-102-05-30

THIS AGREEMENT is made effective the 30th day of May, 2017, by and between the **County of Hidalgo, Texas** ("County") and **CruzBro RGV, LLC dba The Real Estate Center** ("Appraiser").

W I T N E S S E T H:

WHEREAS, the County requires appraisal services for: **The Fair Market Value Appraisals in connection with the Acquisition of Land, Rights of Way, Easements, Condemnations and Disposition of County owned Property located** within **Hidalgo County Precinct No. 3**; and

WHEREAS, the County of Hidalgo solicited Request for Qualifications (RFQ) for the development and establishment of a yearly pool for "Professional Appraisal Services", and

WHEREAS, from which "Professional Appraiser" has been selected from the "Pool" of pre-qualified Appraisers from response to the Request for Qualifications (RFQ), and

WHEREAS, County has determined that the services of "Professional Appraiser" are sometimes necessary to carry out the required appraisal activities.

NOW, THEREFORE, in consideration of the mutual covenants and agreements herein contained, County and Appraiser do mutually agree as follows:

1. Scope of Services. Appraiser agrees to provide to County **the Fair Market Value Appraisals in connection with the Acquisition of Land, Rights of Way, Easements, Condemnations and Disposition of County owned Property located** within **Hidalgo County Precinct No. 3** as shown in Exhibit "A" attached hereto and entitled "Services to be Provided by the Appraiser". ***In the event the Appraiser does not provide the fair market value appraisal prior to the date specified on the purchase order, the Purchase Order will become NULL and VOID. If such Purchase Order becomes NULL and VOID and a fair market value appraisal is***

secured from another firm, Appraiser will be responsible for any additional charges or expenses incurred by Hidalgo County. Further, in the event that it is demonstrated by Appraiser that Hidalgo County has caused or delayed thus preventing the Appraiser from meeting the specified agreed upon deadline to provide the fair market value appraisal ordered, Appraiser must advise in written notice to the Purchasing Department to authorize and to secure additional time to comply.

2. Non-Exclusive Services of Appraiser. Hidalgo County reserves the right to request these services from other sources other than the Appraiser and shall not be in violation of any terms or conditions of this Agreement. The County assumes no liability or obligation for payment to the Appraiser for work performed or costs incurred by the Appraiser prior to the date authorized by the County for the Appraiser to begin work, during periods when work is suspended, or subsequent to the Termination Date.

3. Term. This Contract is for a period of **one (1) year**, effective **May 30, 2017**, and will expire **March 29, 2018** or unless sooner terminated as provided herein. The Appraiser will not begin work or incur costs until authorized in writing by the County for each “Purchase Order”.

4. Compensation. As consideration for rendering the Services provided for in this Contract, the County agrees to pay the Appraiser the amounts specified in Exhibit "B" attached hereto payable against written invoice submitted by Appraiser. The Appraiser is authorized to submit periodic requests for payment within thirty days after completion of each purchase order. The request for payment shall be made using forms acceptable to the County and shall show the total amount earned to the date of submission and the amount due and payable as of the date of the current billing. Upon receipt of said request for payment, County shall submit a requisition for payment of said services in the customary manner provided for payments utilized by Hidalgo County, Texas. Appraiser agrees to separately account for the receipt and/or expenditure of funds received pursuant to this Contract and to keep adequate books and records of all such receipts and/or expenditures. All payments to Appraiser shall be mailed to the address shown in numbered

paragraph 21, hereof.

5. Progress. Upon acceptance of a purchase order, the Appraiser shall undertake and complete the authorized work. The County or the Appraiser can request conferences to be provided at the Appraiser's office, the office of the County, or at other agreed upon locations.

6. Inspection of Work. The County has the right at all reasonable times to inspect or otherwise evaluate the work performed or being performed hereunder and the premises in which it is being performed. If any inspection or evaluation is made on the premises of the Appraiser, or a subcontractor, the Appraiser shall provide and require its subcontractor to provide all reasonable facilities and assistance for the safety and convenience of the inspectors in the performance of their duties. All inspections and evaluations shall be performed in such a manner as will not unduly delay the work.

7. Amendments. If it becomes necessary at any time during the contract period to change the scope of work, the contract period, the maximum amount payable, the complexity, or the character of this contract, an amendment must be prepared and executed within the contract period. The County retains the right to reject any such amendment proposed by the Appraiser unless the County finds the proposed amendment necessary to complete the work authorized herein. Any such amendments be made in writing agreed to by all parties hereto and duly executed before the end of the contract period as specified.

If the County finds it necessary to require changes in completed work because of errors made by the Appraiser, the County shall require the Appraiser to correct the work at no cost to the County and without amendment to the contract. If the changes are made at the request of the County and are not due to errors of the Appraiser, the County will reimburse the Appraiser for the additional work at the same rate of pay established in Exhibit "B", "Basis for Payment". If payment for the additional work will cause the maximum amount payable to be exceeded, an amendment shall be executed in accordance with the terms of this provision.

8. Reporting. The Appraiser shall promptly advise the County in writing of events

which have a significant impact upon the contract, including:

a. Problems, delays, or adverse conditions which will materially affect the ability to meet time schedules and goals, or preclude the attainment of project work units by established time periods. This disclosure shall be accompanied by a statement of the action taken, or contemplated, and any County or, if Federal funds are involved, Federal assistance needed to resolve the situation.

b. Favorable developments or events which enable meeting time schedules and goals sooner than anticipated or producing more work units than originally projected.

9. Ownership of Documents. Upon completion or termination of this contract, all documents prepared by the Appraiser or furnished to the Appraiser by the County shall be delivered to and become the property of the County. All sketches, photographs, calculations, and other data prepared under this contract shall be made available, upon request, to the County without restriction or limitation on their further use. The Appraiser may, at its own expense, have copies made of the documents or any other data furnished the County under this contract.

10. Independent Contractor. Appraiser must comply with all applicable Hidalgo County policies and with any applicable federal, state or local laws, regulations, orders or ordinances applicable to the services provided by Appraiser under this Contract. Notwithstanding the foregoing sentence, Appraiser represents and maintains that it is an independent contractor and is not an employee of Hidalgo County, Texas, or any agency thereof, and represents and warrants that it does not desire or request any fringe benefits provided to employees of Hidalgo County, Texas, and/or any agency thereof, including, but not limited to benefits associated with Hidalgo County's civil service program. Appraiser agrees to be responsible for any federal income tax, withholding or social security tax liability that might arise from payments received hereunder.

11. Voluntary Termination. County may terminate this Contract at any time for any reason or no reason at all upon the giving of thirty (30) days prior written notice to the other party.

12. Insurance. Appraiser agrees to provide liability insurance covering its activities in providing the services for County in an amount not less than the minimum amounts prescribed by the Texas Tort Claims Act, ' 100.001, et seq., Texas Civil Practices and Remedies Code, and shall

furnish department a certificate of insurance, Exhibit “C”, issued by the insurer that such insurance is in full force and effect.

13. No Assignment. Except as otherwise herein provided, Appraiser, may not assign the obligations or rights under this contract to any person without the prior written consent of County.

14. Conflict. Nothing in this Contract shall be construed so as to require the commission of any act contrary to law, and whenever there is any conflict between any provision of this Contract and any present or future law, ordinance or administrative, executive or judicial regulation, order or decree, or amendment thereof, contrary to which the parties have no legal right to contract, the latter shall prevail, but in such event the affected provision or provisions of this Contract shall be modified only to the extent necessary to bring them within the legal requirements and only during the time such conflict exists

15. Termination by County. If Appraiser fails to deliver quality service, fails to achieve the defined goals, outcomes, strategies and outputs set by County, or if Appraiser fails to comply with any conditions in this Contract, then County shall have the right to terminate this Contract upon the giving of ten (10) days prior written notice to Appraiser.

16. No Waiver. No waiver by County of any breach of any provision of this Contract shall be deemed to be a waiver of any preceding or succeeding breach of the same or any other provision hereof.

17. Entire Agreement. This Contract contains the entire agreement between the parties hereto, and each party acknowledges that neither has made (either directly or through any agent or representative) any representations or agreements in connection with this Contract not specifically set forth herein. This Contract may be modified or amended only by agreement in writing executed by County and Appraiser, and not otherwise.

18. Venue. This Contract shall be construed under and in accordance with the laws of the State of Texas, and all obligations of the parties created hereunder are performable in Hidalgo

County, Texas. The parties hereby consent to personal jurisdiction in Hidalgo County, Texas.

19. Hold Harmless. In the event Appraiser should cause, either directly or indirectly, damage, loss, destruction, liability, or claims against the other party as a result of intentional conduct, negligence or otherwise, Appraiser shall hold harmless and indemnify County from any and all obligations, liabilities, causes of action, lawsuits, damages, and assessments, including legal fees, etc., that result from the Appraiser=s intentional actions or negligence. This indemnification clause shall survive this Contract and be enforceable as a separate agreement in the event its survival and enforcement becomes necessary.

20. Attorney's Fees. In the unlikely event that a dispute occurs which is litigated or arbitrated, or a cause of action in law or equity is filed concerning the operation, construction, interpretation, or enforcement of this Contract, the losing party shall bear the cost of the attorney's fees incurred by the prevailing party and any and all costs applicable thereto, including, but not limited to, court costs, deposition fees, expert witness fees, out-of-pocket expenses and travel expenses which are incurred by the prevailing party.

21. Notices. Except as may be otherwise specifically provided in this Contract, all notices, demands, requests or communications required or permitted hereunder shall be in writing and shall either be (i) personally delivered against a written receipt, or (ii) sent by registered or certified mail, return receipt requested, postage prepaid and addressed to the parties at the addresses set forth below, or at such other addresses as may have been theretofore specified by written notice delivered in accordance herewith:

If to County:	Hidalgo County Attention: County Judge 100 East Cano, 2nd Floor Edinburg, Texas 78539
If to Appraiser:	**CruzBroa RGV, LLC dba The Real Estate Center** Attn: Rene De La Cruz, Manager 4900 W. Exp. 83 Ste 229 McAllen, Texas 78501

Each notice, demand, request or communication which shall be delivered or mailed in the manner described above shall be deemed sufficiently given for all purposes at such time as it is

personally delivered to the addressee or, if mailed, at such time as it is deposited in the Unites States mail.

22. Execution of Documents. The parties hereto covenant and agree that they will execute such other and further instruments and documents as are or may become necessary or convenient to effectuate and carry out the terms of this Contract.

. **23. Binding Contract.** This Contract shall be binding upon and inure to the benefit of the parties hereto and their respective heirs, executors, administrators, legal representatives, successors, and assigns where permitted by this contract.

24. Gender. All pronouns used in this Contract shall include the other gender, whether used in the masculine, feminine or neuter gender, and the singular shall include the plural whenever and as often as may be appropriate

25. Authority. The execution and performance of this Contract by County and Appraiser have been duly authorized by all necessary laws, resolutions or corporate action, and this Contract constitutes the valid and enforceable obligations of County and Appraiser in accordance with its terms.

26. Commitment of Current Revenues Only. In the event that, during any term hereof, the Commissioners Court does not appropriate sufficient funds to meet the obligations of County under this Agreement, County may terminate this Agreement upon ninety (90) days written notice to Company. County agrees, however, to use reasonable efforts to secure funds necessary for the continued performance of this Agreement. The parties intend this provision to be a continuing right to terminate this Agreement at the expiration of each budget period of County pursuant to the provisions of Tex. Loc. Govt. Code Ann. ' 271.903 (Vernon Supp. 1996).

27. Immunities. Nothing in this Agreement is intended to and County does not hereby waive, release or relinquish any right to assert any of the defenses County enjoys by virtue of the

state or federal constitution, laws, rules or regulations, and any sovereign, official or qualified immunity available to County as to any claim or action of any person, entity, or individual against County.

EXECUTED as of the day and year first written above.

Approved by Commissioners' Court on _____, 2017.

APPROVED AS TO FORM:
Atlas, Hall & Rodriguez, LLP

By:_____
Stephen L. Crain, Attorney

COUNTY OF HIDALGO, TEXAS

By:_____
Ramon Garcia, County Judge

APPRAISER:
CruzBro RGV LLC dba
The Real Estate Center

By:_____

Printed Name: Rene De La Cruz

Title: Broker/Appraiser

ATTEST:

_____
Arturo Guajardo, Jr., County Clerk

EXHIBIT “A-1”

REQUEST FOR QUALIFICATIONS (RFQ) PROCUREMENT PACKET

Hidalgo County Purchasing Department
2812 S. Business Highway 281
Edinburg, Texas 78539
(956) 318-2626/ Fax: (956) 292-7612

February 1, 2016

Participant's name

Address

City

State, Zip Code

Re: **HIDALGO COUNTY**
Request for Qualifications - **"Professional Appraisal Services and/or Appraisal Review Services Annual Pool-Hidalgo County"**
(Including all funding sources, programs, and entities)
RFQ No: 2016-005-02-17-SMA

Dear Respondents:

Enclosed please find a Request for Qualifications (RFQ) packet for your consideration. Hidalgo County Purchasing Department welcomes and appreciates your participation in the RFQ process.

We have updated our RFQ packet. Carefully read and review all instructions, requirements, specifications and/or scope of work included in this packet.

If any further assistance is required, please do not hesitate to call the Purchasing Department at (956) 318-2626.

Sincerely,

Martha L. Salazar, CPPB
Hidalgo County Purchasing Agent

MLS/sma
Enclosures

Hidalgo County Purchasing Department
New Administration Building
2812 S. Business Highway 281
Edinburg, Texas 78539
(956) 318-2626/ Fax: (956) 318-2629

REQUEST FOR QUALIFICATIONS (RFQ)

TABLE OF CONTENTS

HIDALGO COUNTY

(All funding sources, programs and entities)

"Professional Appraisal Services and/or Appraisal Review Services Annual Pool"

RFQ No: 2016-005-02-17-SMA

Item	Description	No. of Pages
1.	Request for Qualifications Letter	1
2.	Request for Qualifications, Legal Notice	9
3.	Exhibit A, Requirements	8
4.	Exhibit B, Evaluation Criteria and Evaluation Form	1
5.	Attachment B –Procurement Form –Areas of Specialization	1
6.	Exhibit C, Insurance Requirements	4
7.	Exhibit D-1, CIQ Conflict of Interest Questionnaire	3
8.	Exhibit D-2, CIS Local Government Officer Conflicts Disclosure Statement	3
9.	Exhibit E, Proposer's Affidavit	1
10.	Vendor/Bidder Application and W-9 form	6
11.	Certification Regarding Debarment	1
12.	RFQ Submittal Check List	1

The above mentioned items shall be found in the Request for Qualifications (RFQ) packet that is attached herewith. Should you find that any of the items are not attached in its entirety please contact Purchasing by calling (956) 318-2626, advise of missing documentation, and Purchasing will forward information either through facsimile or by U.S. Mail.

Thank you.

Martha L. Salazar, CPPB, Purchasing Agent

February 1, 2016
Date

REQUEST FOR QUALIFICATIONS (RFQ)

HIDALGO COUNTY

(Including all funding sources, programs, and entities)

"Professional Appraisal Services **and/or** Appraisal Review Services Annual Pool"

RFQ NO: 2016-005-02-17-SMA

Acceptance Due Date: **February 17, 2016**

Martha L. Salazar, CPPB, Purchasing Agent
Hidalgo County Purchasing Department

Project Buyer Contact Information:

Sandra Montalvo, Buyer II
(956) 318-2626 Ext. 4865
sandra.montalvo@co.hidalgo.tx.us

1. Sealed qualifications will be received for **"Hidalgo County (Including all funding sources, programs, and entities) Professional Appraisal Services and/or Appraisal Review Services Annual Pool"**, *in* accordance with the requirements attached hereto as Exhibit "A." Qualifications should address all requirements set forth. Respondents may suggest substitutions of features which they feel would be in the best interest of Hidalgo County ("County"). Strong rationale must be presented for any deviation from the requirements. Hidalgo County reserves the right to reject the deviation and its effect on the overall qualifications.

2. **One (1) original, three (3) copies** of all qualifications and **eight (8) CDs in PDF Format** are required with the respondent's name and address clearly typed/printed on upper left hand corner and the proper notation clearly typed/printed on the lower left hand corner of the envelope and/or package, **RFQ 2016-005-02-17-SMA Hidalgo County (Including all funding sources, programs, and entities) Professional Appraisal Services and/or Appraisal Review Services Annual Pool"**, and in County's Purchasing Department, Physical Location: 2802 S. Business Hwy. 281 Postal/ Mailing: 2812 S. Business Hwy. 281 New Administration Building, Edinburg, Texas, **ON OR BEFORE 9:30 A.M., WEDNESDAY, FEBRUARY 17, 2016.**

   NO FACSIMILES OR LATE ARRIVALS WILL BE ACCEPTED. ANY QUALIFICATION RECEIVED AFTER THAT TIME WILL NOT BE OPENED AND WILL BE RETURNED. OVERNIGHT MAIL MUST ALSO BE PROPERLY LABELED ON THE OUTSIDE OF EXPRESS ENVELOPE OR PACKAGE IN REFERENCE TO QUALIFICATION.

   Hidalgo County reserves the right to refuse and reject any/all qualifications and to waive any/all formalities or technicalities, or to accept the proposal considered the best and most advantageous to Hidalgo County.

3. Hidalgo County reserves the right to separate and accept, or eliminate any item(s) listed under this qualification that it deems necessary to accommodate budgetary and/or operational requirements. Hidalgo County also reserves the right to reject any or all qualifications submitted and further reserves the right to design the evaluation criteria to be used in selecting the lowest and best qualification for approval. Receipt of any qualification shall under no circumstances obligate County to accept the lowest dollar qualification. The award of this contract shall be made to the responsible offeror whose qualification is determined to be the best evaluated offer resulting from negotiation, taking into consideration the relative importance of price and other evaluation factors as herein set forth.

4. Failure of the delivered item to perform as specified or failure to meet the stated delivery schedule shall release Hidalgo County from all obligations to the contracting party with regard to the item(s) in question. In such event, County may elect to award the contract to the next-lowest responsible respondent, or to reject all qualifications and re-advertise.

5. For work to be performed at a County owned or operated location, each respondent shall, in its sole discretion, visit the job site before preparing the qualification and thoroughly familiarize himself/herself with existing conditions. Respondent should take field dimensions and note all circumstances which affect the dollar amount of the qualification.

6. Descriptive specifications are referenced in this document to indicate the general kind and quality of equipment desired by Hidalgo County. Due to various styles and models of equipment, respondents are required to include illustrations, specifications, explanation of warranties, and service data with their qualification including catalogue numbers and any necessary references.

7. Proposed prices are to remain firm for a minimum of ninety (90) days after priced qualification opening.

8. County reserves the right to accept or reject any or all qualifications.

9. Any interpretations, amendments, corrections or changes to this qualification document must be in a written addendum and signed by the County Judge or his designee. Addenda will be mailed to all who are known to have received a copy of the Request for Qualifications. Respondents shall acknowledge receipt of all addenda as a part of their qualification.

10. Costs are to be net F.O.B., County Prepaid.

11. County is exempt from Federal Excise Tax, State Tax and Local Tax. DO NOT include tax in cost figure. If it is determined that tax was included in the cost figure it will not be included in the tabulation of any awards. Tax exemption certificates will be furnished upon request.

12. Funds for this procurement have been provided through the County budget for this fiscal year only. County, on an annual basis, has the right to reconsider a contract during the budget process for ensuing years if financial resources of County are insufficient to meet the liabilities of said contract. The award of a qualification or contract hereunder will not be construed to create a debt of the County which is payable out of funds beyond the current fiscal year.

13. **DELIVERY INSTRUCTIONS:**

- No deliveries accepted after 3:00 P.M., Monday-Friday.
- At least seventy two (72) hours prior notice of delivery must be given to Martha L. Salazar, CPPB, Purchasing Agent before delivery will be accepted.
- If you need additional information call the office listed below:

Hidalgo County Purchasing Department
Martha L. Salazar, CPPB, Purchasing Agent
(956) 318-2626

14. **BILLING AND PAYMENT INSTRUCTIONS:**

- Invoices must include:
  a) Name and address of successful respondent
  b) Name and address of receiving department or official
  c) Purchase Order Number and Contract number (if any)
  d) Notation- **"Hidalgo County (Including all funding sources, programs, and entities) RFQ: 2016-005-02-17-SMA-HIDALGO COUNTY (Including all funding sources, programs, and entities) "Professional Appraisal Services and/or Appraisal Review Services Annual Pool",**
  e) Descriptive information as to the items or services delivered, including product code, item number, quantity, etc.
- Discount payments will be considered when offered.
- Contact person for Billing and Payment questions:

HIDALGO COUNTY AUDITOR'S OFFICE
Postal/Mailing 2808 S. Business Hwy. 281
Edinburg, Texas 78539
(956) 318-2511

15. SCHEDULE OF EVENTS

Qualification Opening, 9:30 A.M.	**February 17, 2016**
Award of Contract:	2016
Commence Work or Deliver Products:	2016

16. HIDALGO COUNTY HOLIDAYS:

2016 YEAR	
New Year's Day	01/01/16
Martin Luther King Day	01/18/16
President's Day	02/15/16
Good Friday	03/25/16
Memorial Day	05/30/16
Independence Day	07/04/16
Labor Day	09/05/16
Columbus Day	10/10/16
Veteran's Day	11/11/16
Thanksgiving Day	11/24/16-11/25/16
Christmas Day	12/23/16-12/26/16
New Year's Eve	12/30/16

17. ~~BID OR PERFORMANCE BOND~~ AND DEBARMENT CERTIFICATION; ~~PAYMENT UNDER CONTRACT:~~

- ~~If the contract proposed is for the construction of public works or is for a contract for goods and services exceeding $100,000, all bidders shall furnish a good and sufficient bid bond in the amount of five percent of the total contract price. A bid bond must be executed with a surety company authorized to do business in Texas~~. All respondents are also required to furnish a certification or acknowledgment stating that the contractor or vendor is free from suspension or debarment pursuant to federal regulation 45CFR76.

- ~~Together with the signing of a contract or issuance of a purchase order following the acceptance of a qualification, and prior to commencement of the actual work, the respondent shall furnish a performance bond to the County for the full amount of the contract, if that contract exceeds $50,000.~~

- ~~If the contract is for $50,000 or less, no money will be paid to the contractor until completion and acceptance of the work or the fulfillment of the purchase obligation to the County, and, if applicable, the receipt by County of satisfactory evidence that all subcontractors and materialmen have been paid.~~

- ~~If a contract is for the construction, alteration or repair of public buildings or public works, the contractor *shall* provide a payment bond for a contract in excess of Twenty Five Thousand Dollars ($25,000.00), as required by Tex. Govt. Code Ch. 2253.~~

- ~~For requirements contracts, bond requirements are determined by applying the proposed unit price to the estimated quantities included in the specifications.~~

18. ETHICAL STANDARDS:

- It shall be a breach of ethics to offer, give or agree to give any elected official, department head or employee, or former elected official, department head or employee, of the County, or for any elected official, department head or employee or former elected official, department head or employee of the County, to solicit, demand, accept or agree to accept from another person, entity or organization, a gratuity or an offer of employment in connection with any decision, approval, disapproval, recommendation, preparation or any part of a program requirement or purchase request, influencing the content of any specification or procurement standard, rendering of advice, investigation, auditing, or in any other advisory capacity in any proceeding or application, request for ruling, determination, claim or controversy, or other particular matter pertaining to any program requirement or a contract or subcontract, or to any solicitation or qualification therefore pending before any department or agency of the County.

- It shall be a breach of ethics for any payment, gratuity or offer of employment to be made by or on behalf of a subcontractor under a contract to the prime contractor or higher tier subcontractor for any contract for the County, or any person associated therewith, as an inducement for the award of a subcontract or order.

- No public official shall have an interest in a contract awarded hereunder except in accordance with Tex. Loc. Govt. Code Chapter 171.

- **NOTICE:**

  ALL COMMUNICATIONS BY A VENDOR TO THE COUNTY, ITS OFFICIALS, AND DEPARTMENT HEADS REGARDING THIS PROCUREMENT SHALL BE DONE THROUGH THE HIDALGO COUNTY PURCHASING DEPARTMENT.

  No vendor, its representative, agent, or employee shall engage in private communication with a member of the Hidalgo County Commissioners Court or county department heads regarding any procurement of goods or services by the County from the date that the bid, RFP, or RFQ is released. No private communication regarding the purchase shall be permitted until the procurement process is complete and a purchase order is granted or a contract is entered into. Members of the commissioners court are required to make a reasonable effort to inform themselves regarding potential procurements and have a duty to inquire of vendors, their representatives or employees, the nature of any private communication being sought prior to engaging in any communication. "Private Communication" means communication with any vendor outside of a posted meeting of the governing body, a regular meeting of a standing or appointed committee, or a negotiation with a vendor which has been specifically authorized by the governing body.

19. DISCLOSURE OF CONFLICT OF INTEREST

Effective January 1, 2016, Chapter 176 of the Texas Local Government Code requires that any vendor, person, consultant or contractor considering doing business with Hidalgo County ("the County") to disclose in the Conflict of Interest Questionnaire (the "CIQ") attached as Exhibit D-1, the vendor, person, consultant or contractor's affiliation or business relationship that might cause a conflict of interest with the County. By law, the CIQ must be filed with the Hidalgo County Clerk's Office no later than the seventh business day after the date the person becomes aware of facts that require that statement to be filed. The disclosure requirement applies to a person or business that contracts or seeks to contract with Hidalgo County for the sale or purchase of property, goods or service. Any purchase order or contract resulting from this process shall be considered null and void if the successful respondent fails to comply with Texas Local Government Code Chapter 176. Vendors, consultants, contractors and others who desire to conduct business with Hidalgo County are encouraged to refer to Texas Local Government Code Chapter 176 for details of this law. An offense under Texas Local Government Code Chapter 176 is a Class C Misdemeanor.

Completed Form CIQ must be submitted to the Hidalgo County Clerk's Office located at 100 N. Closner, Edinburg, Texas 78539 - Hidalgo County Courthouse.

COMPLETION AND SUBMISSION OF FORM CIQ IS THE SOLE RESPONSIBILITY OF THE PROSPECTIVE RESPONDENT. QUESTIONS REGARDING COMPLIANCE SHOULD BE DIRECTED TO YOUR LEGAL COUNSEL.

20. CERTIFICATE OF INTERESTED PARTIES (FORM HB1295)

As of January 1, 2016, to comply with Texas Government Code Section §2252.908, and the rules issued by the Texas Ethics Commission found in Title 1, Section 46.1, 46.3 and 46.5 of the Texas Administrative Code, we have updated and revised our RFQ packet. In accordance with these requirements, business must submit a completed Certificate of Interested Parties Form 1295 to the County before the County may enter into a contract with the business entity. In box 3 of Form 1295, you will provide the RFQ No. as shown on the packet. Once completed and filed with the Texas Ethics Commission, Form 1295 must be printed and signed in the presence of a notary and submitted to our office either by facsimile transmission to (956) 292-7612 or via email to sandra.montalvo@co.hidalgo.tx.us. Hidalgo County cannot enter into a contract until Form 1295 is submitted. Therefore, failure to timely submit Form 1295 signed and notarized may result in delay of award. Full instructions for completion and submittal of Form 1295 may be found on the Texas Ethics Commission website:

https://www.ethics.state.tx.us/tec/1295-Info.htm

THE AWARDED VENDOR WILL HAVE THIRTY (30) DAYS TO SUBMIT THE SIGNED NOTARIZED FORM 1295. ***HIDALGO COUNTY CANNOT ENTER INTO A CONTRACT UNTIL FORM 1295 IS SUBMITTED.***

FORM CIS (LOCAL GOVERNMENT OFFICER CONFLICTS DISCLOSURE STATEMENT) will be included in packet as Exhibit "D-2".

COMPLETION AND SUBMISSION OF FORM CIS IS THE SOLE RESPONSIBILITY OF THE PROSPECTIVE RESPONDENT. QUESTIONS REGARDING COMPLIANCE SHOULD BE DIRECTED TO YOUR LEGAL COUNSEL.

21. If, during the life of any contract or qualification awarded, the successful respondents' net prices generally available to other customers for items awarded herein are reduced below the contracted price, it is understood and agreed that the benefits of such reduction shall be extended to County.

22. Qualifications, and all goods and services provided thereunder, shall comply with all federal, state and local laws concerning this type(s) of goods and/or services.

23. Minimum Standards for Responsible Prospective Respondents: A prospective respondent must affirmatively demonstrate respondent's responsibility. A prospective respondent, by submitting a qualification, represents to County that it meets the following requirements:

- Possess or is able to obtain adequate financial resources as required to perform under the qualification;
- Be able to comply with the required or proposed delivery schedule;
- Have a satisfactory record of performance;
- Have a satisfactory record of integrity and ethics;
- Be otherwise qualified and eligible to receive an award.

24. Successful respondent will pay or cause to be paid, without cost or expenses to County, all FICA, FUTA/SUTA and Federal Income Withholding Taxes of all employees, and all wages and benefits as required by Federal or State law. Successful respondents' officers, agents and/or employees will not be entitled to any benefits of an employee or elected official of County, including, but not limited to, benefits associated with Countys' civil service system.

25. Any contract award to a successful respondent will be in effect until (a) the contract expires, (b) delivery and acceptance of products, and/or performance of services ordered, or (c) terminated by County with thirty (30) day's written notice prior to cancellation.

26. County reserves the right to enforce performance of any contract awarded hereunder in any manner prescribed by law or deemed to be in the best interest of the County. County reserves the right to terminate contract immediately in the event of breach or default by successful respondent, or in the event a successful respondent fails to:

A. Meet schedules;
B. Pay any required fees or taxes; or
C. Otherwise perform in accordance with the requirements.

27. Successful respondent shall defend, indemnify and save harmless County and all its elected officials, officers, agents and employees from all suits, actions, or other claims of any character, name and description brought for or on account of any injuries or damages received or sustained by any person, persons, or property on account of any negligent act or fault of the successful respondent, or of any agent, employee, subcontractor or supplier in the execution of, or performance under, any contract which may result from qualification award. Successful respondent indemnifies and will indemnify and save harmless County from liability, claim or demand on their part, agents, servants, customers, and/or employees whether such liability, claim or demand arise from event or casualty happening on or within the occupied premises themselves or happening upon or in any of the halls, elevators, entrances, stairways or approaches to the facilities within which the occupied premises are located. Successful respondent shall pay any judgment with costs which may be obtained against county

growing out of such injury or damages, and shall, upon request, provide a defense to County by counsel reasonably acceptable to County. Successful respondents' indemnity hereunder shall include, but is not limited to, claims relating to patent, copyright or trademark infringement, and the like, arising out of the goods or services provided by successful respondent.

28. Successful respondent shall warrant that all items/services shall conform to the specifications and/or all warranties provided under the Uniform Commercial Code and be free from all defects in material, workmanship and the like. Items supplied under a contract pursuant to this Request for Qualifications shall be subject to Countys' approval. Items found to be defective or not meeting specifications shall be replaced by successful respondent within two business days at no expense to County. Items not picked up within one (1) week after notification shall be deemed a donation to County and may be used or disposed of at County's discretion and without waiver of any other rights of County as to the items' nonconformity.

29. This document and any disputes arising hereunder shall be governed and construed according to the laws of the State of Texas, and will be performable exclusively in Hidalgo County, Texas.

30. The successful respondent shall not assign, sell, transfer or convey its rights under any awarded contract, in whole or in part, without the prior written consent of County.

31. Respondents shall provide with the qualification response, a list of at least three (3) references where like services have been supplied by their firm. Include the name of the business or government, address, telephone number and name of representative or contact person.

32. Respondents must provide **all** documentation requested with this Qualification in their response. Failure to provide this information may result in rejection of the qualification as nonconforming.

Request for Qualifications
For
HIDALGO COUNTY
(Including all funding sources, programs, and entities)
"Professional Appraisal Services and/or Appraisal Review Services Annual Pool"
RFQ NO: 2016-005-02-17-SMA

To: Martha L. Salazar, CPPB, Purchasing Agent
Hidalgo County Purchasing Department
Physical Location: 2802 S. Business Hwy. 281
Postal/ Mailing: 2812 S. Business Hwy. 281
New Administration Building
Edinburg, Texas 78539

In accordance with the Requirements, and subject to all laws and regulations of the United States and state and local laws, the undersigned respondent proposes and commits to furnish all labor, equipment, material, software and services as set forth in the documents hereinbefore mentioned. The undersigned further agrees, upon acceptance of its qualification, to execute a contract and/or Purchase Order issued by Hidalgo County for performing and completing the work described in the Requirements within the time stated and for the prices proposed in the documents attached hereto and made a part hereof.

Respondent acknowledges receipt of all of the pages of the documents referenced in the Request for Qualification Checklist presented in connection with this procurement. Respondent understands that Hidalgo County reserves the right to reject any or all qualifications and further reserves the right to design the evaluation criteria to be used in selecting the lowest and best qualification.

Respondent agrees that this qualification shall be good and may not be withdrawn for a period of ninety (90) calendar days after the scheduled closing time for receiving qualifications, as contained in the Requirements.

Respectfully submitted,

Firm: _____

Address: _____

By: _____

Printed Name: _____

Title: _____

EXHIBIT A
REQUIREMENTS

HIDALGO COUNTY
(INCLUDING ALL FUNDING SOURCES, PROGRAMS, AND ENTITIES)
REQUEST FOR QUALIFICATIONS

"PROFESSIONAL APPRAISAL SERVICES *AND/OR* APPRAISAL REVIEW SERVICES ANNUAL POOL"

RFQ № 2016-005-02-17-SMA

The County of Hidalgo will be accepting Statements of Qualifications from Real Estate Appraisers (firms) in order to establish a pre-qualified pool on an "As Needed Basis" per project by all County Departments and/or applicable Programs requiring said services as set forth in the requirements. Upon approval and acceptance by Hidalgo County Commissioners' Court, the term of the pre-qualified pool of Real Estate Appraisers will be for **March 16, 2016 and ending March 15, 2017.** The Hidalgo County Purchasing Department will receive **sealed** envelopes containing Statement of Qualifications for the provision of **"PROFESSIONAL APPRAISAL SERVICES AND/OR APPRAISAL REVIEW SERVICES ANNUAL POOL-HIDALGO COUNTY"** (including all funding sources, Programs, and Entities)-**Request For Qualifications** as specified herein. Statements of Qualifications will be accepted until **9:30 A.M., Wednesday, February 17, 2016.** **ANY RFQ RECEIVED AFTER THAT TIME WILL NOT BE OPENED AND WILL BE RETURNED.**

The following outlines the Request for Qualifications:

SECTION I

GENERAL TERMS AND CONDITIONS

RFQ DOCUMENT SUBMITTALS/DELIVERY

A total of one (1) original, three (3) copies and eight (8) CD's in PDF format of the RFQ shall be submitted as part of your response.

Respondents must complete and include in their response, all documentation requested in this RFQ. Refer to enclosed RFQ Check List form for documents to be included with your response.

Hidalgo County is requesting that statements of Qualifications responses be sealed, clearly marked and labeled with the Company's name, RFQ N0: 2016-005-02-17-SMA, Project title: "Professional Appraisal Services and/or Appraisal Review Services Annual Pool" and Opening Date and be delivered to Martha L. Salazar, CPPB, Purchasing Agent, at:

US Postal Mail Address:
Martha L. Salazar, CPPB, Purchasing Agent
Hidalgo County Purchasing Department
Administration Building
2812 S. Business Hwy 281
Edinburg, Texas 78539

Physical Address:
Martha L. Salazar, CPPB, Purchasing Agent
Hidalgo County Purchasing Department
Administration Building
2802 S. Business Hwy. 281
Edinburg, Texas 78539

Hidalgo County requires respondents, when hand delivering statements of Qualifications, to have a Purchasing Department representative time/date stamp and initial the sealed envelope when dropping RFQ off.

All costs and expenses associated with the preparation and submission of (RFQs, bids, proposals and/or quotes) shall be the responsibility of the respondent and no reimbursements for such charges or expenses shall be passed onto Hidalgo County.

DISCLOSURE OF CONFLICT OF INTEREST:
Effective January 1, 2016, Chapter 176 of the Texas Local Government Code requires that any vendor, person, consultant of contractor considering doing business with Hidalgo County ("the County") to disclose in the Conflict of Interest Questionnaire ("the CIQ") attached as **Exhibit D-1**, the vendor, person consultant or contractor's affiliation of business relationship that might cause a conflict of interest with the County. By law, the CIQ must be filed with the Hidalgo County Clerk's Office no later than the seventh business day after the date the person becomes aware of facts that require that statement to be filed. The disclosure requirement applies to a person or business who contract or seek to contract with Hidalgo County for the sale or purchase of property, goods or service. Any purchase order or contract resulting from this process shall be considered null and void if the successful respondent fails to comply with Texas Local Government Code Chapter 176. Vendors, consultants, contractors and others who desire to conduct business with Hidalgo County are encouraged to refer to Texas Local Government Code Chapter 176 for the details of this law. An offense under Texas Local Government Code Chapter 176 is a Class C Misdemeanor.

COMPLETED FORM CIQ MUST BE SUBMITTED TO THE HIDALGO COUNTY CLERK'S OFFICE LOCATED AT 100 N. CLOSNER, EDINBURG, TEXAS 78539 – HIDALGO COUNTY COURTHOUSE.

COMPLETION AND SUBMISSION OF FORM CIQ IS THE SOLE RESPONSIBILITY OF THE PROSPECTIVE RESPONDENT. QUESTIONS REGARDING COMPLIANCE SHOULD BE DIRECTED TO YOUR LEGAL COUNSEL.

FORM CIS (Local Government Officer Conflicts Disclosure Statement) WILL BE INCLUDED IN PACKET AS EXHIBIT "D-2".

COMPLETION AND SUBMISSION OF FORM CIS IS THE SOLE RESPONSIBILITY OF THE PROSPECTIVE RESPONDENT. QUESTIONS REGARDING COMPLIANCE SHOULD BE DIRECTED TO YOUR LEGAL COUNSEL.

PROPOSER'S AFFIDAVIT:
Respondents to this RFQ must submit a signed Proposer's Affidavit (attached herein in Exhibit E) certainly that the submission is (1) not the result of Collusion as described in the Proposer's Affidavit, (2) that the Respondent does not have a Conflict of Interest as described in the Proposer's Affidavit, or (3) that the Respondent has not and will not attempt to lobby directly or indirectly as described in the Proposer's Affidavit.

NON-DISCRIMINATION:
Respondents, during the performance of this contract, will not discriminate against any employee or applicant for employment because of race, religion, sex, national origin or disability except where religion, sex, national origin or disability is a bona fide occupational qualification reasonably necessary to the normal operation of the contractor.

PROCESSING TIME FOR PAYMENT:
Respondents are advised that a minimum of thirty (30) days is required to process invoices for payment.

ELECTRONIC TRANSMISSION OF QUALIFICATIONS:
Hidalgo County's Purchasing Department will not accept telegraphic or electronically transmitted submissions.

PROOF OF FINANCIAL AND BUSINESS CAPABILITY:
Respondent must, upon request, furnish satisfactory evidence of their ability to furnish products or services in accordance with the terms and conditions of these requirements. Hidalgo County will make the final determination as to the vendor's ability.

RESPONDENT DEFAULT:
Hidalgo County reserves the right, in case of respondent default, to procure the articles or services from other sources and hold the defaulting respondent responsible for any excess costs occasioned thereby.

RESTRICTIVE OR AMBIGUOUS REQUIREMENTS:
It is the responsibility of the respondent to review the Request for Qualifications (RFQ) packet and to notify in writing the Purchasing Department if the requirements are formulated in a manner that would unnecessarily restrict competition. These criteria also apply to requirements that are ambiguous.

RFQ QUESTIONS AND ANSWERS:
Any protest(s) or question(s) regarding the requirements or request for qualifications procedures must be received in the Purchasing Department **via e-mail or via facsimile to (956) 292-7612: sandra.montalvo@co.hidalgo.tx.us BY NO LATER THAN Wednesday, February 10, 2016 at 5:00 p.m. Responses will be sent to all applicants by Friday, February 12, 2016 at 5:00 p.m. TELEPHONE INQUIRIES WILL NOT BE ACCEPTED.**

SIGNING OF QUALIFICATIONS:
In order to be considered, all submittals **must** be signed. **Please sign the original in *blue ink.***

WAIVING OF INFORMALITIES:
Hidalgo County reserves the right to waive minor informalities or technicalities when it is in the best interest of Hidalgo County.

SUBCONTRACTING:
The successful respondent may not subcontract the award without the written consent of the Commissioners' Court of Hidalgo County.

TERM OF POOL:
The pool term is for a period of one (1) year, or upon completion of project(s) unless project specifies for more than one (1) year.

DAVIS BACON ACT: (IF APPLICABLE)
All selected and awarded firms are required; if applicable adhere to the Davis-Bacon Act.

SECTION II
RFQ REQUIREMENTS

REQUEST FOR QUALIFICATIONS:
The required contents and limitations for the preparation of the RFQ are described in this section. Failure to provide the requested information or adhere to any County limitations may result in disqualification of the submitted RFQ.

UNDERSTANDING OF THE PROJECT:
This section should demonstrate the respondents understanding of the project needs, the work required, and any local issues or concerns. This description should be concise, candid, and limited to 3 pages in length.

FIRM QUALIFICATIONS:
County of Hidalgo is seeking to contract with an Appraisal firm(s) that has had experience in, but not limited to the following areas:

A. Scope of Appraisal Services:

1) Property appraisals will be based on "Fair Market Value" unless otherwise specified or requested. Two copies of the appraisal report shall be bound, clearly labeled and signed by the primary certified general appraiser and any other certified general appraiser and/or licensed trainee which aided in the process. Four additional copies will be furnished.

2) All photographs used within the report must be originals. No digital photos shall be used for subject property. Digital photos shall only be used for comparable sales. All adjustments to any comparable sales must be clearly explained in a narrative format. All comparable sales must be within a two year time frame. If any sales which have occurred prior to the two year limit, they must be clearly explained and added to the conventional three comparable sales typically used in the appraisal process.

3) Current location maps of the subject property including, area, regional, plat, and flood maps must be included and clearly labeled for the subject property.

4) All reports shall be a "Self Contained Narrative Report" unless otherwise requested and shall follow the 2009 or most current Uniform Standard of Professional Appraisal Practice (USPAP) rules and regulations. Each appraisal report must be physically inspected, photographed, and personally signed by the primary-general certified appraiser of the firm. Appraiser trainees may aid in the collection of the information, however, all analysis and conclusion must be performed by the primary general certified appraiser.

5) Appraisal reports are due within four weeks of request (20 business days) and receipt of a fully executed purchase order.

B. Scope of Appraisal Review Services:

1) Review all appraisal reports for each Property to determine consistency of values, supporting documentation related to the conclusion reached, compliance with the Uniform Standards of Professional Appraisal Practices.

2) As a review of an initial and update appraisal are two separate and distinct appraisal assignments, the fees must consider the complexity of each separate assignment as shown in the Provider's Fee Schedule.

3) Beyond delivery of the review appraisal of the initial and updated appraisal documents, the review appraiser can be called to provide preparation and testimony for any Special Meeting/Commissioners Court. For this appraisal assignment, the fee for the preparation time and testimony must be based on the hourly rate shown in the Provider's Fee Schedule.

4) Appraisal Review reports are due within four weeks of request (20 business days) and receipt of a fully executed purchase order.

5) It is the County's sole option to require TXDoT's form ROW-A-10 "Tabulation of Values" in the deliverable for appraisal review assignments.

Additionally, the above section(s) (A and/or B) should include, but are not restricted to the following information:

A. Firm name, address, phone number and person to contact regarding the Request for Qualification.

B. Qualifications and recent experience of the firm and key personnel relative to the performance of similar services for public entities.

C. List of references including the name, address and phone number of the person most closely associated with the firm's prior project performance (See Attachment B).

D. List of Recent Projects-within Two (2) Years (See Attachment B).

E. Ability to commence services immediately after successfully negotiating a contract for services.

F. Familiarity with the geographical area.

G. Statement regarding an Affirmative Action Program.

H. Minimum of $1,000,000.00 Professional liability, errors and omissions, insurance.

PERSONNEL AND STAFFING:
The firm should provide an organizational chart for the project and a summary paragraph of the project work to be performed by each proposed staff member. Biographic summaries that highlight the experience relevant to the specific project responsibilities should be provided for all proposed personnel. There is a one (1) page limitation for each biographic summary provided.

REQUIRED CERTIFICATIONS AND SUBMITTAL:
This section will contain any current licenses and/or certifications as required by the STATE OF TEXAS.

PARTICIPATING FIRMS ARE NOT TO PROVIDE A FEE SCHEDULE WITH THIS SUBMITTAL:
The fee will be negotiated in accordance with the Professional Services Procurement Act, Tex. Govt. Code Ann.2254.001, et seq.

PART III
SELECTION/EVALUATION

SELECTION/EVALUATION PROCESS:

The evaluation system consists of a 100-point system. The firms will be ranked after evaluation on a per project basis upon approval of roster by Hidalgo County Commissioners' Court. Categories under the 100-point system include response to RFQ. RFQ submittal evaluation will be based on the criteria outlined below, and will be scored on the scales shown on the enclosed "RFQ Evaluation Form. "The respondent's Statement of Qualifications will be evaluated based on the criteria presented below.

1) ***Responsiveness:*** **30 points**
   a) Requested Information
   b) Thoroughness
   c) Understanding of Project
   d) List of references provided
   e) Clarity - Brevity
   f) Degree of Interest

2) ***Firm Capabilities:*** **45 points**
   a) Background
   b) Relevant experience
   c) Experience with similar projects
   d) Knowledge of area
   e) Timeliness of schedule
   f) Quality services previously provided to Hidalgo County
   g) Current workload
   h) Ability to commence various requested projects simultaneously
   i) Completion of projects within budgets

3) ***Staffing:*** **25 points**
   a) Qualifications of personnel-The professional team members responsible assigned to assist County projects shall be identified in the organizational chart.
   b) Key personnel
   c) Required discipline skills

REQUEST FOR QUALIFICATIONS GRADING AND RANKING PROTOCOL:

Once a Project has been identified and it is determined that Real Estate Appraiser Services are required, approval to seek engagement for professional services is sought from Hidalgo County Commissioners Court. The following protocol and procedures are utilized;

1) Hidalgo County Commissioners' Court, Elected Official and/or the User Department in need of Real Estate Appraiser Services **will nominate** (at the minimum) three (3) firms from Hidalgo County's approved pool of firms, thereafter, will review, score, and evaluate the responses received in Request for Qualifications.

2) A grid of the scores will be presented to Commissioners' Court for the purpose of **ranking and approval** for the Purchasing Department to enter into negotiations with the number one (1) ranked firm;

NEGOTIATION PROCESS:

Negotiations will commence with Commissioners' Court approved number one ranked firm;

1) Firms will be asked to submit (as part of those negotiations) a "scope of service" including fees;

2) The negotiated contract including best and final offer with the successful firm will be presented to Commissioners' Court (including compliance with all requirements as well as insurances) for consideration and final approval.

3) If negotiations with the number one (1) ranked firm fail, the Purchasing Department will recommend to Commissioners' Court that negotiations cease with the number one (1) ranked firm and commence to negotiate with the next highest ranked firm;

EXHIBIT "B"

EVALUATION CRITERIA

"PROFESSIONAL APPRAISAL SERVICES AND/OR APPRAISAL REVIEW SERVICES ANNUAL POOL"

RFQ No.2016-005-02-17-SMA

Internal Use Only: Commodity Code: 946-15

Selection Criteria	Points	Score
1. RESPONSIVENESS -----(30 pts)		
➢ Requested information	5	
➢ Thoroughness	5	
➢ Understanding of Project	5	
➢ List of references provided	5	
➢ Clarity-Brevity	5	
➢ Degree if Interest	5	
Comments/Rationale For Points:		TOTAL _____
2. FIRM CAPABILITIES----(45 pts)		
➢ Background	5	
➢ Relevant experience	5	
➢ Experience with similar projects	5	
➢ Knowledge of area	5	
➢ Timeliness of schedule	5	
➢ Quality services previously provided to Hidalgo County	5	
➢ Current workload	5	
➢ Ability to commence various re-quested projects simultaneously	5	
➢ Completion of projects within budgets	5	
Comments/Rationale For Points:		TOTAL _____
3. STAFFING--------(25 pts)		
➢ Qualification of personnel	10	
➢ Key personnel	10	
➢ Required discipline skills	5	
Comments/Rationale For Points:		TOTAL
Total Score		

Project Name: _____

Department:_____

Firm/Participant:_____

Evaluator: _____ Date:_____

Type of Service: (circle one): Appraisal Appraisal Review

PROCUREMENT FORM
ATTACHMENT "B"
HIDALGO COUNTY-PROFESSIONAL APPRAISAL SERVICES AND/OR APPRAISAL REVIEW SERVICES POOL
2016-005-02-17-SMA

Name and Address of Firm:	_____ _____ _____
Principals of Firm and Titles:	_____ _____ _____

Area of Specialization: Check Applicable Service(s)

	Appraisal Services		Appraisal Review Services

Local References (Rio Grande Valley) List Four (4) Only:

Reference #1: _____

Reference #2: _____

Reference #3: _____

Reference #4: _____

Recent Projects (Within Two [2] Years) List Four (4) Only:

Project #1: _____

Project #2: _____

Project #3: _____

Project #4: _____

Submitted By: _____

Signature: _____

Typed Name: _____

EXHIBIT "C"

Insurance Requirements
Professional Services
(i.e...Engineers, Architects, Appraisers & Surveyors)

The proposer awarded the contract shall furnish proof of insurance, which will also include any subcontractor that is subcontracted by the proposer in at least the following limits, to be in place prior to providing any services under this Contract and to continue at all times in force in effect during the term of this Contract:

1. Professional liability insurance policy with limits of at least One Million Dollars ($1,000,000) per occurrence, or limited to claims made, include at least a five (5) year extended reporting period.

2. A Five Hundred Thousand Dollars ($500,000.00) Comprehensive General Liability insurance policy providing additional coverage to all underlying liabilities of County.

3. Automobile liability insurance policy with limits of at least Three Hundred Thousand Dollars ($300,000.00) per person and Five Hundred Thousand Dollars ($500,000.00) per occurrence. Coverage should include injury to or death of persons and property damage claims with limits up to Five Hundred Thousand Dollars ($500,000.00) arising out of the services provided to County hereunder.

4. Uninsured/Underinsured motorist coverage in an amount equal to the bodily injury limits set forth immediately above;

5. Workers compensation insurance in amounts established by Texas law, unless the Bidder is specifically exempted from the Texas Workers Compensation Act, Texas Labor Code Chapter 401, et. seq.

<u>Hidalgo County will only accept certificates of insurance on an Acord form (as attached hereto).</u> Certificates of insurance naming County as an additional insured shall be submitted to County for approval prior to any services being performed by Contractor. Each policy of insurance required hereunder shall extend for a period equivalent to, or longer than the term of the Contract, and any insurer hereunder shall be required to give at least thirty (30) days written notice to the County prior to the cancellation of any such coverage on the termination date, or otherwise. This Contract shall be automatically suspended upon the cancellation, or other termination, of any required policy of insurance hereunder, and such suspension shall continue until evidence adequate replacement coverage is provided to County. If replacement coverage is not provided within thirty (30) days following suspension of the Contract, this Contract shall automatically terminate.

ACORD	CERTIFICATE OF INSURANCE	DATE (MM/DD/YY)

PRODUCER	THIS CERTIFICATE IS ISSUED AS A MATTER OF INFORMATION ONLY AND CONFERS NO RIGHTS UPON THE CERTIFICATE HOLDER. THIS CERTIFICATE DOES NOT AMEND, EXTEND OR ALTER THE COVERAGE AFFORDED BY THE POLICIES BELOW.
	INSURERS AFFORDING COVERAGE
INSURED	INSURER A:
	INSURER B:
	INSURER C:
	INSURER D:
	INSURER E:

COVERAGES

THE POLICIES OF INSURANCE LISTED BELOW HAVE BEEN ISSUED TO THE INSURED NAMED ABOVE FOR THE POLICY PERIOD INDICATED. NOTWITHSTANDING ANY REQUIREMENT, TERM OR CONDITION OF ANY CONTRACT OR OTHER DOCUMENT WITH RESPECT TO WHICH THIS CERTIFICATE MAY BE ISSUED OR MAY PERTAIN, THE INSURANCE AFFORDED BY THE POLICIES DESCRIBED HEREIN IS SUBJECT TO ALL THER TERMS, EXCLUSIONS AND CONDITIONS OF SUCH POLICIES. AGGREGATE LIMITS SHOWN MAY HAVE BEEN REDUCED BY PAID CLAIMS.

INSR LTR	TYPE OF INSURANCE	POLICY NUMBER	POLICY EFFECTIVE DATE (MM/DD/YY)	POLICY EXPIRATION DATE (MM/DD/YY)	LIMITS	
A	**GENERAL LIABILITY** ☐ COMMERCIAL GENERAL LIABILITY ☐ CLAIMS MADE ☐ OCCUR ☐ OWNER'S & CONT. PROT ☐ OWNER'S PROTECTIVE LIABILITY GEN'L AGGREGATE LIMIT APPLIES PER: ☐ POLICY ☐ PROJECT ☐ LOC				EACH OCCURRENCE	$
					FIRE DAMAGE (Any one fire)	$
					MED (Any one person)	$
					PERS & ADV INJURY	$
					AL AGGREGATE	$
					ODUCTS – COMP/OP AGG	$
B	**AUTOMOBILE LIABILITY** ☐ ANY AUTO ☐ ALL OWNED AUTOS ☐ SCHEDULED AUTOS ☐ HIRED AUTOS ☐ NON-OWNED AUTOS				COMBINED SINGLE LIMIT (Ea accident)	$
					BODILY INJURY (Per person)	$
					BODILY INJURY (Per accident)	$
					PROPERTY DAMAGE (Per accident)	$
	GARAGE LIABILITY ☐ ANY AUTO				AUTO ONLY-EA ACCIDENT	$
					OTHER THAN AUTO ONLY EA ACC	$
					AGG	$
C	**EXCESS LIABILITY** ☐ OCCUR ☐ CLAIMS MADE ☐ DEDUCTIBLE ☐ RETENTION $				EACH OCCURENCE	$
					AGGREGATE	$
						$
						$
						$
D	**WORKERS COMPENSATION AND EMPLOYER'S LIABILITY**				WC STATU- TORY LIMITS ☐ OTHER	
					E.L. EACH ACCIDENT	$
					E.L. DISEASE-EA EMPLOYEE	$
					E.L. DISEASE-POLICY LIMIT	$
	OTHER					

DESCRIPTION OF OPERATIONS / LOCATION / VEHICLES / EXCLUSIONS ADDED BY ENDORSEMENT / SPECIAL PROVISIONS

County of Hidalgo shall be named as additional insured on all Commercial General Liability policies.

CERTIFICATE HOLDER	ADDITIONAL INSURED; INSURER LETTER: _____ CANCELLATION
Hidalgo County **Attn: Purchasing Department** **2812 S Highway Bus. 281** **Edinburg, Texas 78539**	SHOULD ANY OF THE ABOVE DESCRIBED POLICIES BY CANCELLED BEFORE THE EXPIRATION DATE THEREOF, THE ISSUING INSURER WILL ENDEAVOR TO MAIL ***30*** DAYS WRITTEN NOTICE TO THE CERTIFICATE HOLDER NAMED TO THE LEFT, BUT FAILURE TO DO SO SHALL IMPOSE NO OBLIGATION OR LIABILITY OF ANY KIND UPON THE INSURER, ITS AGENTS OR REPRESENTATIVES. AUTHORIZED REPRESENTATIVE

SAMPLE

Insurance Requirement Acknowledgment

I, _____, authorized representative for _____,
Company/Vendor

hereby acknowledge receipt of the County's required insurance limits. Said requirements:

- will be acquired within 10 working days after notification from Purchasing Department of award of project by the Hidalgo County Commissioners' Court;

- will acquire additional amounts required to meet the County's requirements within 10 working days after notification from Purchasing Department of award of project by the Hidalgo County Commissioners' Court; currently carry the following

  Professional Liability (Errors & Omissions): $_____

  Automobile Liability: $_____ General Liability: $_____

- have already been met, see attached copy of insurance certificate.

_____ _____
Authorized Representative Date

Notice to Proposer:

A certificate of insurance for the required insurance limits shall be provided to the Purchasing Department's Contract Managers in order to qualify for award and to execute a contract between your Company and the County

Failure to provide Certificates of Insurance to the Purchasing Department's Contract Managers will cause the award to be rescinded and re-awarded to next qualified vendor. Certificates of Insurance will be monitored and verified on a **quarterly basis** to ensure coverage policy is in place. It is the Company's obligation to maintain the appropriate insurance coverage throughout the term of the contract.

THIS FORM MUST ACCOMPANY YOUR PACKET

PROJECT REQUIREMENTS ACKNOWLEDGMENT

This is to certify that I, _____, possess all of the APPLICABLE:

1. Licenses: _____
2. Bonds: _____
3. Certificates: _____
4. Permits: _____
5. Other: _____

necessary to carry out the required project. Furthermore, I am providing copies of the required documentation so that, if my company is awarded this project, I may be eligible to enter into a contract with Hidalgo County and proceed to complete the project in a timely manner.

* Any licenses, bonds, certificates, permits, etc. which are required must be presented as part of the packet in order to expedite the evaluation process. Failure to provide said documentation will result in the disqualification of your proposal/qualification.

_____ _____

Authorized Signature Date

_____

Company

_____

Address

_____

City, State, Zip

Exhibit "D-1"

Form CIQ

CONFLICT OF INTEREST QUESTIONNAIRE

FORM CIQ

For vendor doing business with local governmental entity

This questionnaire reflects changes made to the law by H.B. 23, 84th Leg., Regular Session.

This questionnaire is being filed in accordance with Chapter 176, Local Government Code, by a vendor who has a business relationship as defined by Section 176.001(1-a) with a local governmental entity and the vendor meets requirements under Section 176.006(a).

By law this questionnaire must be filed with the records administrator of the local governmental entity not later than the 7th business day after the date the vendor becomes aware of facts that require the statement to be filed. *See* Section 176.006(a-1), Local Government Code.

A vendor commits an offense if the vendor knowingly violates Section 176.006, Local Government Code. An offense under this section is a misdemeanor.

OFFICE USE ONLY
Date Received

1 **Name of vendor who has a business relationship with local governmental entity.**

2 ☐ **Check this box if you are filing an update to a previously filed questionnaire.** (The law requires that you file an updated completed questionnaire with the appropriate filing authority not later than the 7th business day after the date on which you became aware that the originally filed questionnaire was incomplete or inaccurate.)

3 **Name of local government officer about whom the information is being disclosed.**

_____
Name of Officer

4 **Describe each employment or other business relationship with the local government officer, or a family member of the officer, as described by Section 176.003(a)(2)(A). Also describe any family relationship with the local government officer. Complete subparts A and B for each employment or business relationship described. Attach additional pages to this Form CIQ as necessary.**

A. Is the local government officer or a family member of the officer receiving or likely to receive taxable income, other than investment income, from the vendor?

☐ Yes ☐ No

B. Is the vendor receiving or likely to receive taxable income, other than investment income, from or at the direction of the local government officer or a family member of the officer AND the taxable income is not received from the local governmental entity?

☐ Yes ☐ No

5 **Describe each employment or business relationship that the vendor named in Section 1 maintains with a corporation or other business entity with respect to which the local government officer serves as an officer or director, or holds an ownership interest of one percent or more.**

6 ☐ Check this box if the vendor has given the local government officer or a family member of the officer one or more gifts as described in Section 176.003(a)(2)(B), excluding gifts described in Section 176.003(a-1).

7

_____
Signature of vendor doing business with the governmental entity

_____
Date

CONFLICT OF INTEREST QUESTIONNAIRE
For vendor doing business with local governmental entity

A complete copy of Chapter 176 of the Local Government Code may be found at http://www.statutes.legis.state.tx.us/Docs/LG/htm/LG.176.htm. For easy reference, below are some of the sections cited on this form.

Local Government Code § 176.001(1-a): "Business relationship" means a connection between two or more parties based on commercial activity of one of the parties. The term does not include a connection based on:

(A) a transaction that is subject to rate or fee regulation by a federal, state, or local governmental entity or an agency of a federal, state, or local governmental entity;

(B) a transaction conducted at a price and subject to terms available to the public; or

(C) a purchase or lease of goods or services from a person that is chartered by a state or federal agency and that is subject to regular examination by, and reporting to, that agency.

Local Government Code § 176.003(a)(2)(A) and (B):

(a) A local government officer shall file a conflicts disclosure statement with respect to a vendor if:

***

(2) the vendor:

(A) has an employment or other business relationship with the local government officer or a family member of the officer that results in the officer or family member receiving taxable income, other than investment income, that exceeds $2,500 during the 12-month period preceding the date that the officer becomes aware that

(i) a contract between the local governmental entity and vendor has been executed; or

(ii) the local governmental entity is considering entering into a contract with the vendor;

(B) has given to the local government officer or a family member of the officer one or more gifts that have an aggregate value of more than $100 in the 12-month period preceding the date the officer becomes aware that:

(i) a contract between the local governmental entity and vendor has been executed; or

(ii) the local governmental entity is considering entering into a contract with the vendor.

Local Government Code § 176.006(a) and (a-1)

(a) A vendor shall file a completed conflict of interest questionnaire if the vendor has a business relationship with a local governmental entity and:

(1) has an employment or other business relationship with a local government officer of that local governmental entity, or a family member of the officer, described by Section 176.003(a)(2)(A);

(2) has given a local government officer of that local governmental entity, or a family member of the officer, one or more gifts with the aggregate value specified by Section 176.003(a)(2)(B), excluding any gift described by Section 176.003(a-1); or

(3) has a family relationship with a local government officer of that local governmental entity.

(a-1) The completed conflict of interest questionnaire must be filed with the appropriate records administrator not later than the seventh business day after the later of:

(1) the date that the vendor:

(A) begins discussions or negotiations to enter into a contract with the local governmental entity; or

(B) submits to the local governmental entity an application, response to a request for proposals or bids, correspondence, or another writing related to a potential contract with the local governmental entity; or

(2) the date the vendor becomes aware:

(A) of an employment or other business relationship with a local government officer, or a family member of the officer, described by Subsection (a);

(B) that the vendor has given one or more gifts described by Subsection (a); or

(C) of a family relationship with a local government officer.

Exhibit "D-2"

Form CIS

LOCAL GOVERNMENT OFFICER CONFLICTS DISCLOSURE STATEMENT

FORM CIS

(Instructions for completing and filing this form are provided on the next page.)

This questionnaire reflects changes made to the law by H.B. 23, 84th Leg., Regular Session.

This is the notice to the appropriate local governmental entity that the following local government officer has become aware of facts that require the officer to file this statement in accordance with Chapter 176, Local Government Code.

OFFICE USE ONLY

Date Received

1 Name of Local Government Officer

2 Office Held

3 Name of vendor described by Sections 176.001(7) and 176.003(a), Local Government Code

4 Description of the nature and extent of each employment or other business relationship and each family relationship with vendor named in Item 3.

5 List gifts accepted by the local government officer and any family member, if aggregate value of the gifts accepted from vendor named in Item 3 exceeds $100 during the 12-month period described by Section 176.003(a)(2)(B).

Date Gift Accepted _____ Description of Gift _____

Date Gift Accepted _____ Description of Gift _____

Date Gift Accepted _____ Description of Gift _____

(attach additional forms as necessary)

6 AFFIDAVIT

I swear under penalty of perjury that the above statement is true and correct. I acknowledge that the disclosure applies to each family member (as defined by Section 176.001(2), Local Government Code) of this local government officer. I also acknowledge that this statement covers the 12-month period described by Section 176.003(a)(2)(B), Local Government Code.

_____

Signature of Local Government Officer

AFFIX NOTARY STAMP / SEAL ABOVE

Sworn to and subscribed before me, by the said _____, this the _____ day of _____, 20 _____, to certify which, witness my hand and seal of office.

_____

Signature of officer administering oath | Printed name of officer administering oath | Title of officer administering oath

LOCAL GOVERNMENT OFFICER CONFLICTS DISCLOSURE STATEMENT

Section 176.003 of the Local Government Code requires certain local government officers to file this form. A "local government officer" is defined as a member of the governing body of a local governmental entity; a director, superintendent, administrator, president, or other person designated as the executive officer of a local governmental entity; or an agent of a local governmental entity who exercises discretion in the planning, recommending, selecting, or contracting of a vendor. This form is required to be filed with the records administrator of the local governmental entity not later than 5 p.m. on the seventh business day after the date on which the officer becomes aware of the facts that require the filing of this statement.

A local government officer commits an offense if the officer knowingly violates Section 176.003, Local Government Code. An offense under this section is a misdemeanor.

Refer to chapter 176 of the Local Government Code for detailed information regarding the requirement to file this form.

INSTRUCTIONS FOR COMPLETING THIS FORM

The following numbers correspond to the numbered boxes on the other side.

1. **Name of Local Government Officer.** Enter the name of the local government officer filing this statement.

2. **Office Held.** Enter the name of the office held by the local government officer filing this statement.

3. **Name of vendor described by Sections 176.001(7) and 176.003(a), Local Government Code.** Enter the name of the vendor described by Section 176.001(7), Local Government Code, if the vendor: a) has an employment or other business relationship with the local government officer or a family member of the officer as described by Section 176.003(a)(2)(A), Local Government Code; b) has given to the local government officer or a family member of the officer one or more gifts as described by Section 176.003(a)(2)(B), Local Government Code; or c) has a family relationship with the local government officer as defined by Section 176.001(2-a), Local Government Code.

4. **Description of the nature and extent of each employment or other business relationship and each family relationship with vendor named in item 3.** Describe the nature and extent of the employment or other business relationship the vendor has with the local government officer or a family member of the officer as described by Section 176.003(a)(2)(A), Local Government Code, and each family relationship the vendor has with the local government officer as defined by Section 176.001(2-a), Local Government Code.

5. **List gifts accepted, if the aggregate value of the gifts accepted from vendor named in item 3 exceeds $100.** List gifts accepted during the 12-month period (described by Section 176.003(a)(2)(B), Local Government Code) by the local government officer or family member of the officer from the vendor named in item 3 that in the aggregate exceed $100 in value.

6. **Affidavit.** Signature of local government officer.

Local Government Code § 176.001(2-a): "Family relationship" means a relationship between a person and another person within the third degree by consanguinity or the second degree by affinity, as those terms are defined by Subchapter B, Chapter 573, Government Code.

Local Government Code § 176.003(a)(2)(A):

(a) A local government officer shall file a conflicts disclosure statement with respect to a vendor if:

***

(2) the vendor:

(A) has an employment or other business relationship with the local government officer or a family member of the officer that results in the officer or family member receiving taxable income, other than investment income, that exceeds $2,500 during the 12-month period preceding the date that the officer becomes aware that:

(i) a contract between the local governmental entity and vendor has been executed; or

(ii) the local governmental entity is considering entering into a contract with the vendor.

EXHIBIT "E"
PROPOSER'S AFFIDAVIT

PROPOSER'S AFFIDAVIT OF NON-COLLUSION
NON-CONFILICT OF INTERST, AND ANTI-LOBBYING
FOR "REAL ESTATE APPRAISERS POOL"

STATE OF TEXAS
COUNTY OF HIDALGO

Affiant, _____, being first duly sworn, deposes that:

(1) Affiant does hereby state neither the Proposer nor any of the Proposer's officers, partners, owners, agents, representatives, employees, or parties in interest, has in any way colluded, conspired, agreed, directly or indirectly with any person, firm, corporation, or other proposer, or potential proposer, to provide any money or other valuable consideration for assistance in procuring or attempting to procure a contract or fix the prices in the attached proposed or the proposal of any other proposer, and further states that no such money or other reward will be hereinafter paid.

(2) Affiant further states they have neither recommended or suggested to Hidalgo County or nay of its officials or employees, any of the terms or provisions set forth in their Request for Proposal and subsequent agreement, except at a meeting open to all interested proposers, of which proper notice was given.

(3) Affiant, further states their officers, employees, or agents have not, and will not attempt to lobby, directly or indirectly, the Hidalgo County Commissioner's Court between proposal submission date and award by the Hidalgo County Commissioner's Court.

(4) Affiant further states no officer, or stockholder of the Proposer is a member of the staff, or related to any employee of the Hidalgo County except as noted herein below:

Signature/Title: _____

Subscribed and sworn to before me this _____day of _____, 20__.

_____

Notary Public

My commission expires:_____, 20__

HIDALGO COUNTY
PURCHASING DEPARTMENT
Bidder/Vendor Application

Complete in print or type. Please return this application to the Hidalgo County Purchasing Department
thru Facsimile: (956) 318-2629 or (956) 292-7612
in person or regular mail to:
Mailing/Postal Address: 2812 S. Business Hwy. 281
Physical Address: 2802 S. Business Hwy. 281
Edinburg, Texas 78539
or e-mail: purchasing@co.hidalgo.tx.us

Company Name: Telephone No. ( )
dba Name:
Legal Name:
Mailing Address: Fax No. ( )
Physical Address:
City, State, Zip Tax I.D. No.
Remit to Address : City, State, Zip
E-Mail Address:
Representative(s) Name(s) & Title(s)
Type of Organization (check one): _____ Individual _____ Partnership _____ Corporation _____ Non-Profit _____ LLC _____ Sole Proprietor _____ Other, Specify State Identification No._____ (Please attached completed W-9 form with this application) Federal Identification No. or (if individual) SS No.
State of Incorporation: _____ Date:_____ Other:
Type of Business (check one): _____ Manufacturer _____ Wholesaler _____ Retailer _____ Broker _____ Distributor _____ Service Organization _____ Other, Specify
Name & Title of Person(s) Authorized to Sign Bids, Proposals, and/or Contracts:
Small and/or Disadvantaged Business Information (check application criteria) Small Business: Disadvantaged Business (At Least 51% Ownership) ☐ Less than 125,000 annual gross receipt ☐ Black American ☐ Native American ☐ Less than 250,000 annual gross receipt ☐ Hispanic American ☐ Women ☐ Less than 499,000 annual gross receipt ☐ Asian Pacific American ☐ Other ☐ More than 500,000 annual gross receipt Have you been certified as a HUB or an MBE/WBE source?: ☐ Yes ☐ No Indicate Certification No.(s):_____ or are Certificate(s) attached?: ☐ Yes ☐ No
What type of product(s) is/are solicited by your company?: Would you like to be provided with specifications for procurements of such products?: ☐ Yes ☐ No
To Be Completed by the County: Rec'd by (Purchasing):_____ Date Rec'd by (Purchasing): Date Forwarded Information to Auditor's Office:_____Entry Date: _____ Vendor No.:

HISTORICALLY UNDERUTILIZED BUSINESS (HUB) DECLARATION

The primary objective of the Hidalgo County HUB Program is to ensure Historically Underutilized Businesses receive a fair and equal opportunity for participation in the County's procurement process. This fact holds true for Services (Professional & Non-Professional), Commodities, and Construction contracts and any subcontracts thereto. The program strongly encourages Prime Contractors to provide subcontracting opportunities to Certified Hub Contractors/Vendors. Our goal for HUB contractor/vendor participation, as well as HUB subcontractor participation is 30%. To be considered as a "Certified HUB Contractor/Vendor" the contractor/vendor must have been certified by, and hold a current and valid certification with any of the three agencies listed below.

Have you been Certified as a HUB or an MBE/WBE source?: ☐Yes ☐ No

If yes, by whom?: ☐ Texas Building & Procurement Commission ☐ Other_____

Indicate Certification No(s).:_____ or Are Certificate(s) Attached?: ☐ Yes ☐ No

LIST OF CERTIFIED HUB SUBCONTRACTORS

(Attach additional pages if necessary)

What percentage of the Bid, RFP, or RFQ is to be subcontracted with Certified HUB sources?: _____%
(List HUB Subcontractor information below).

HUB Subcontractor Name: _____ HUB Status:
Certifying Agency (Check all applicable): ☐Texas Building & Procurement Commission ☐ other
Address: _____ City: _____ State: _____ Zip:
Contact Person: _____ Title: _____ Phone No.: ( )
Subcontract Amount: $_____ Description of Work to be Performed:

HUB Subcontractor Name: _____ HUB Status:
Certifying Agency (Check all applicable): ☐Texas Building & Procurement Commission ☐ other
Address: _____ City: _____ State: _____ Zip:
Contact Person: _____ Title: _____ Phone No.: ( )
Subcontract Amount: $_____ Description of Work to be Performed:

HUB Subcontractor Name: _____ HUB Status:
Certifying Agency (Check all applicable): ☐Texas Building & Procurement Commission ☐ other
Address: _____ City: _____ State: _____ Zip:
Contact Person: _____ Title: _____ Phone No.: ( )
Subcontract Amount: $_____ Description of Work to be Performed:

Form **W-9**
(Rev. August 2013)
Department of the Treasury
Internal Revenue Service

Request for Taxpayer Identification Number and Certification

Give Form to the requester. Do not send to the IRS.

Print or type
See Specific Instructions on page 2.

Name (as shown on your income tax return)

Business name/disregarded entity name, if different from above

Check appropriate box for federal tax classification:
☐ Individual/sole proprietor ☐ C Corporation ☐ S Corporation ☐ Partnership ☐ Trust/estate

☐ Limited liability company. Enter the tax classification (C=C corporation, S=S corporation, P=partnership) ▶ _____

☐ Other (see instructions) ▶

Exemptions (see instructions):
Exempt payee code (if any) _____
Exemption from FATCA reporting code (if any) _____

Address (number, street, and apt. or suite no.)

Requester's name and address (optional)

City, state, and ZIP code

List account number(s) here (optional)

Part I Taxpayer Identification Number (TIN)

Enter your TIN in the appropriate box. The TIN provided must match the name given on the "Name" line to avoid backup withholding. For individuals, this is your social security number (SSN). However, for a resident alien, sole proprietor, or disregarded entity, see the Part I instructions on page 3. For other entities, it is your employer identification number (EIN). If you do not have a number, see *How to get a TIN* on page 3.

Note. If the account is in more than one name, see the chart on page 4 for guidelines on whose number to enter.

Social security number
☐☐☐ – ☐☐ – ☐☐☐☐

Employer identification number
☐☐ – ☐☐☐☐☐☐☐

Part II Certification

Under penalties of perjury, I certify that:

1. The number shown on this form is my correct taxpayer identification number (or I am waiting for a number to be issued to me), and
2. I am not subject to backup withholding because: (a) I am exempt from backup withholding, or (b) I have not been notified by the Internal Revenue Service (IRS) that I am subject to backup withholding as a result of a failure to report all interest or dividends, or (c) the IRS has notified me that I am no longer subject to backup withholding, and
3. I am a U.S. citizen or other U.S. person (defined below), and
4. The FATCA code(s) entered on this form (if any) indicating that I am exempt from FATCA reporting is correct.

Certification instructions. You must cross out item 2 above if you have been notified by the IRS that you are currently subject to backup withholding because you have failed to report all interest and dividends on your tax return. For real estate transactions, item 2 does not apply. For mortgage interest paid, acquisition or abandonment of secured property, cancellation of debt, contributions to an individual retirement arrangement (IRA), and generally, payments other than interest and dividends, you are not required to sign the certification, but you must provide your correct TIN. See the instructions on page 3.

Sign Here | **Signature of U.S. person** ▶ | **Date** ▶

General Instructions

Section references are to the Internal Revenue Code unless otherwise noted.

Future developments. The IRS has created a page on IRS.gov for information about Form W-9, at *www.irs.gov/w9*. Information about any future developments affecting Form W-9 (such as legislation enacted after we release it) will be posted on that page.

Purpose of Form

A person who is required to file an information return with the IRS must obtain your correct taxpayer identification number (TIN) to report, for example, income paid to you, payments made to you in settlement of payment card and third party network transactions, real estate transactions, mortgage interest you paid, acquisition or abandonment of secured property, cancellation of debt, or contributions you made to an IRA.

Use Form W-9 only if you are a U.S. person (including a resident alien), to provide your correct TIN to the person requesting it (the requester) and, when applicable, to:

1. Certify that the TIN you are giving is correct (or you are waiting for a number to be issued),
2. Certify that you are not subject to backup withholding, or
3. Claim exemption from backup withholding if you are a U.S. exempt payee. If applicable, you are also certifying that as a U.S. person, your allocable share of any partnership income from a U.S. trade or business is not subject to the withholding tax on foreign partners' share of effectively connected income, and
4. Certify that FATCA code(s) entered on this form (if any) indicating that you are exempt from the FATCA reporting, is correct.

Note. If you are a U.S. person and a requester gives you a form other than Form W-9 to request your TIN, you must use the requester's form if it is substantially similar to this Form W-9.

Definition of a U.S. person. For federal tax purposes, you are considered a U.S. person if you are:

- An individual who is a U.S. citizen or U.S. resident alien,
- A partnership, corporation, company, or association created or organized in the United States or under the laws of the United States,
- An estate (other than a foreign estate), or
- A domestic trust (as defined in Regulations section 301.7701-7).

Special rules for partnerships. Partnerships that conduct a trade or business in the United States are generally required to pay a withholding tax under section 1446 on any foreign partners' share of effectively connected taxable income from such business. Further, in certain cases where a Form W-9 has not been received, the rules under section 1446 require a partnership to presume that a partner is a foreign person, and pay the section 1446 withholding tax. Therefore, if you are a U.S. person that is a partner in a partnership conducting a trade or business in the United States, provide Form W-9 to the partnership to establish your U.S. status and avoid section 1446 withholding on your share of partnership income.

In the cases below, the following person must give Form W-9 to the partnership for purposes of establishing its U.S. status and avoiding withholding on its allocable share of net income from the partnership conducting a trade or business in the United States:

- In the case of a disregarded entity with a U.S. owner, the U.S. owner of the disregarded entity and not the entity,
- In the case of a grantor trust with a U.S. grantor or other U.S. owner, generally, the U.S. grantor or other U.S. owner of the grantor trust and not the trust, and
- In the case of a U.S. trust (other than a grantor trust), the U.S. trust (other than a grantor trust) and not the beneficiaries of the trust.

Foreign person. If you are a foreign person or the U.S. branch of a foreign bank that has elected to be treated as a U.S. person, do not use Form W-9. Instead, use the appropriate Form W-8 or Form 8233 (see Publication 515, Withholding of Tax on Nonresident Aliens and Foreign Entities).

Nonresident alien who becomes a resident alien. Generally, only a nonresident alien individual may use the terms of a tax treaty to reduce or eliminate U.S. tax on certain types of income. However, most tax treaties contain a provision known as a "saving clause." Exceptions specified in the saving clause may permit an exemption from tax to continue for certain types of income even after the payee has otherwise become a U.S. resident alien for tax purposes.

If you are a U.S. resident alien who is relying on an exception contained in the saving clause of a tax treaty to claim an exemption from U.S. tax on certain types of income, you must attach a statement to Form W-9 that specifies the following five items:

1. The treaty country. Generally, this must be the same treaty under which you claimed exemption from tax as a nonresident alien.
2. The treaty article addressing the income.
3. The article number (or location) in the tax treaty that contains the saving clause and its exceptions.
4. The type and amount of income that qualifies for the exemption from tax.
5. Sufficient facts to justify the exemption from tax under the terms of the treaty article.

Example. Article 20 of the U.S.-China income tax treaty allows an exemption from tax for scholarship income received by a Chinese student temporarily present in the United States. Under U.S. law, this student will become a resident alien for tax purposes if his or her stay in the United States exceeds 5 calendar years. However, paragraph 2 of the first Protocol to the U.S.-China treaty (dated April 30, 1984) allows the provisions of Article 20 to continue to apply even after the Chinese student becomes a resident alien of the United States. A Chinese student who qualifies for this exception (under paragraph 2 of the first protocol) and is relying on this exception to claim an exemption from tax on his or her scholarship or fellowship income would attach to Form W-9 a statement that includes the information described above to support that exemption.

If you are a nonresident alien or a foreign entity, give the requester the appropriate completed Form W-8 or Form 8233.

What is backup withholding? Persons making certain payments to you must under certain conditions withhold and pay to the IRS a percentage of such payments. This is called "backup withholding." Payments that may be subject to backup withholding include interest, tax-exempt interest, dividends, broker and barter exchange transactions, rents, royalties, nonemployee pay, payments made in settlement of payment card and third party network transactions, and certain payments from fishing boat operators. Real estate transactions are not subject to backup withholding.

You will not be subject to backup withholding on payments you receive if you give the requester your correct TIN, make the proper certifications, and report all your taxable interest and dividends on your tax return.

Payments you receive will be subject to backup withholding if:

1. You do not furnish your TIN to the requester,
2. You do not certify your TIN when required (see the Part II instructions on page 3 for details),
3. The IRS tells the requester that you furnished an incorrect TIN,
4. The IRS tells you that you are subject to backup withholding because you did not report all your interest and dividends on your tax return (for reportable interest and dividends only), or
5. You do not certify to the requester that you are not subject to backup withholding under 4 above (for reportable interest and dividend accounts opened after 1983 only).

Certain payees and payments are exempt from backup withholding. See *Exempt payee code* on page 3 and the separate Instructions for the Requester of Form W-9 for more information.

Also see *Special rules for partnerships* on page 1.

What is FATCA reporting? The Foreign Account Tax Compliance Act (FATCA) requires a participating foreign financial institution to report all United States account holders that are specified United States persons. Certain payees are exempt from FATCA reporting. See *Exemption from FATCA reporting code* on page 3 and the Instructions for the Requester of Form W-9 for more information.

Updating Your Information

You must provide updated information to any person to whom you claimed to be an exempt payee if you are no longer an exempt payee and anticipate receiving reportable payments in the future from this person. For example, you may need to provide updated information if you are a C corporation that elects to be an S corporation, or if you no longer are tax exempt. In addition, you must furnish a new Form W-9 if the name or TIN changes for the account, for example, if the grantor of a grantor trust dies.

Penalties

Failure to furnish TIN. If you fail to furnish your correct TIN to a requester, you are subject to a penalty of $50 for each such failure unless your failure is due to reasonable cause and not to willful neglect.

Civil penalty for false information with respect to withholding. If you make a false statement with no reasonable basis that results in no backup withholding, you are subject to a $500 penalty.

Criminal penalty for falsifying information. Willfully falsifying certifications or affirmations may subject you to criminal penalties including fines and/or imprisonment.

Misuse of TINs. If the requester discloses or uses TINs in violation of federal law, the requester may be subject to civil and criminal penalties.

Specific Instructions

Name

If you are an individual, you must generally enter the name shown on your income tax return. However, if you have changed your last name, for instance, due to marriage without informing the Social Security Administration of the name change, enter your first name, the last name shown on your social security card, and your new last name.

If the account is in joint names, list first, and then circle, the name of the person or entity whose number you entered in Part I of the form.

Sole proprietor. Enter your individual name as shown on your income tax return on the "Name" line. You may enter your business, trade, or "doing business as (DBA)" name on the "Business name/disregarded entity name" line.

Partnership, C Corporation, or S Corporation. Enter the entity's name on the "Name" line and any business, trade, or "doing business as (DBA) name" on the "Business name/disregarded entity name" line.

Disregarded entity. For U.S. federal tax purposes, an entity that is disregarded as an entity separate from its owner is treated as a "disregarded entity." See Regulation section 301.7701-2(c)(2)(iii). Enter the owner's name on the "Name" line. The name of the entity entered on the "Name" line should never be a disregarded entity. The name on the "Name" line must be the name shown on the income tax return on which the income should be reported. For example, if a foreign LLC that is treated as a disregarded entity for U.S. federal tax purposes has a single owner that is a U.S. person, the U.S. owner's name is required to be provided on the "Name" line. If the direct owner of the entity is also a disregarded entity, enter the first owner that is not disregarded for federal tax purposes. Enter the disregarded entity's name on the "Business name/disregarded entity name" line. If the owner of the disregarded entity is a foreign person, the owner must complete an appropriate Form W-8 instead of a Form W-9. This is the case even if the foreign person has a U.S. TIN.

Note. Check the appropriate box for the U.S. federal tax classification of the person whose name is entered on the "Name" line (Individual/sole proprietor, Partnership, C Corporation, S Corporation, Trust/estate).

Limited Liability Company (LLC). If the person identified on the "Name" line is an LLC, check the "Limited liability company" box only and enter the appropriate code for the U.S. federal tax classification in the space provided. If you are an LLC that is treated as a partnership for U.S. federal tax purposes, enter "P" for partnership. If you are an LLC that has filed a Form 8832 or a Form 2553 to be taxed as a corporation, enter "C" for C corporation or "S" for S corporation, as appropriate. If you are an LLC that is disregarded as an entity separate from its owner under Regulation section 301.7701-3 (except for employment and excise tax), do not check the LLC box unless the owner of the LLC (required to be identified on the "Name" line) is another LLC that is not disregarded for U.S. federal tax purposes. If the LLC is disregarded as an entity separate from its owner, enter the appropriate tax classification of the owner identified on the "Name" line.

Other entities. Enter your business name as shown on required U.S. federal tax documents on the "Name" line. This name should match the name shown on the charter or other legal document creating the entity. You may enter any business, trade, or DBA name on the "Business name/disregarded entity name" line.

Exemptions

If you are exempt from backup withholding and/or FATCA reporting, enter in the *Exemptions* box, any code(s) that may apply to you. See *Exempt payee code* and *Exemption from FATCA reporting code* on page 3.

Exempt payee code. Generally, individuals (including sole proprietors) are not exempt from backup withholding. Corporations are exempt from backup withholding for certain payments, such as interest and dividends. Corporations are not exempt from backup withholding for payments made in settlement of payment card or third party network transactions.

Note. If you are exempt from backup withholding, you should still complete this form to avoid possible erroneous backup withholding.

The following codes identify payees that are exempt from backup withholding:

1—An organization exempt from tax under section 501(a), any IRA, or a custodial account under section 403(b)(7) if the account satisfies the requirements of section 401(f)(2)

2—The United States or any of its agencies or instrumentalities

3—A state, the District of Columbia, a possession of the United States, or any of their political subdivisions or instrumentalities

4—A foreign government or any of its political subdivisions, agencies, or instrumentalities

5—A corporation

6—A dealer in securities or commodities required to register in the United States, the District of Columbia, or a possession of the United States

7—A futures commission merchant registered with the Commodity Futures Trading Commission

8—A real estate investment trust

9—An entity registered at all times during the tax year under the Investment Company Act of 1940

10—A common trust fund operated by a bank under section 584(a)

11—A financial institution

12—A middleman known in the investment community as a nominee or custodian

13—A trust exempt from tax under section 664 or described in section 4947

The following chart shows types of payments that may be exempt from backup withholding. The chart applies to the exempt payees listed above, 1 through 13.

IF the payment is for . . .	THEN the payment is exempt for . . .
Interest and dividend payments	All exempt payees except for 7
Broker transactions	Exempt payees 1 through 4 and 6 through 11 and all C corporations. S corporations must not enter an exempt payee code because they are exempt only for sales of noncovered securities acquired prior to 2012.
Barter exchange transactions and patronage dividends	Exempt payees 1 through 4
Payments over $600 required to be reported and direct sales over $5,000[1]	Generally, exempt payees 1 through 5[2]
Payments made in settlement of payment card or third party network transactions	Exempt payees 1 through 4

[1] See Form 1099-MISC, Miscellaneous Income, and its instructions.

[2] However, the following payments made to a corporation and reportable on Form 1099-MISC are not exempt from backup withholding: medical and health care payments, attorneys' fees, gross proceeds paid to an attorney, and payments for services paid by a federal executive agency.

Exemption from FATCA reporting code. The following codes identify payees that are exempt from reporting under FATCA. These codes apply to persons submitting this form for accounts maintained outside of the United States by certain foreign financial institutions. Therefore, if you are only submitting this form for an account you hold in the United States, you may leave this field blank. Consult with the person requesting this form if you are uncertain if the financial institution is subject to these requirements.

A—An organization exempt from tax under section 501(a) or any individual retirement plan as defined in section 7701(a)(37)

B—The United States or any of its agencies or instrumentalities

C—A state, the District of Columbia, a possession of the United States, or any of their political subdivisions or instrumentalities

D—A corporation the stock of which is regularly traded on one or more established securities markets, as described in Reg. section 1.1472-1(c)(1)(i)

E—A corporation that is a member of the same expanded affiliated group as a corporation described in Reg. section 1.1472-1(c)(1)(i)

F—A dealer in securities, commodities, or derivative financial instruments (including notional principal contracts, futures, forwards, and options) that is registered as such under the laws of the United States or any state

G—A real estate investment trust

H—A regulated investment company as defined in section 851 or an entity registered at all times during the tax year under the Investment Company Act of 1940

I—A common trust fund as defined in section 584(a)

J—A bank as defined in section 581

K—A broker

L—A trust exempt from tax under section 664 or described in section 4947(a)(1)

M—A tax exempt trust under a section 403(b) plan or section 457(g) plan

Part I. Taxpayer Identification Number (TIN)

Enter your TIN in the appropriate box. If you are a resident alien and you do not have and are not eligible to get an SSN, your TIN is your IRS individual taxpayer identification number (ITIN). Enter it in the social security number box. If you do not have an ITIN, see *How to get a TIN* below.

If you are a sole proprietor and you have an EIN, you may enter either your SSN or EIN. However, the IRS prefers that you use your SSN.

If you are a single-member LLC that is disregarded as an entity separate from its owner (see *Limited Liability Company (LLC)* on page 2), enter the owner's SSN (or EIN, if the owner has one). Do not enter the disregarded entity's EIN. If the LLC is classified as a corporation or partnership, enter the entity's EIN.

Note. See the chart on page 4 for further clarification of name and TIN combinations.

How to get a TIN. If you do not have a TIN, apply for one immediately. To apply for an SSN, get Form SS-5, Application for a Social Security Card, from your local Social Security Administration office or get this form online at *www.ssa.gov*. You may also get this form by calling 1-800-772-1213. Use Form W-7, Application for IRS Individual Taxpayer Identification Number, to apply for an ITIN, or Form SS-4, Application for Employer Identification Number, to apply for an EIN. You can apply for an EIN online by accessing the IRS website at *www.irs.gov/businesses* and clicking on Employer Identification Number (EIN) under Starting a Business. You can get Forms W-7 and SS-4 from the IRS by visiting IRS.gov or by calling 1-800-TAX-FORM (1-800-829-3676).

If you are asked to complete Form W-9 but do not have a TIN, apply for a TIN and write "Applied For" in the space for the TIN, sign and date the form, and give it to the requester. For interest and dividend payments, and certain payments made with respect to readily tradable instruments, generally you will have 60 days to get a TIN and give it to the requester before you are subject to backup withholding on payments. The 60-day rule does not apply to other types of payments. You will be subject to backup withholding on all such payments until you provide your TIN to the requester.

Note. Entering "Applied For" means that you have already applied for a TIN or that you intend to apply for one soon.

Caution: *A disregarded U.S. entity that has a foreign owner must use the appropriate Form W-8.*

Part II. Certification

To establish to the withholding agent that you are a U.S. person, or resident alien, sign Form W-9. You may be requested to sign by the withholding agent even if items 1, 4, or 5 below indicate otherwise.

For a joint account, only the person whose TIN is shown in Part I should sign (when required). In the case of a disregarded entity, the person identified on the "Name" line must sign. Exempt payees, see *Exempt payee code* earlier.

Signature requirements. Complete the certification as indicated in items 1 through 5 below.

1. Interest, dividend, and barter exchange accounts opened before 1984 and broker accounts considered active during 1983. You must give your correct TIN, but you do not have to sign the certification.

2. Interest, dividend, broker, and barter exchange accounts opened after 1983 and broker accounts considered inactive during 1983. You must sign the certification or backup withholding will apply. If you are subject to backup withholding and you are merely providing your correct TIN to the requester, you must cross out item 2 in the certification before signing the form.

3. Real estate transactions. You must sign the certification. You may cross out item 2 of the certification.

4. Other payments. You must give your correct TIN, but you do not have to sign the certification unless you have been notified that you have previously given an incorrect TIN. "Other payments" include payments made in the course of the requester's trade or business for rents, royalties, goods (other than bills for merchandise), medical and health care services (including payments to corporations), payments to a nonemployee for services, payments made in settlement of payment card and third party network transactions, payments to certain fishing boat crew members and fishermen, and gross proceeds paid to attorneys (including payments to corporations).

5. Mortgage interest paid by you, acquisition or abandonment of secured property, cancellation of debt, qualified tuition program payments (under section 529), IRA, Coverdell ESA, Archer MSA or HSA contributions or distributions, and pension distributions. You must give your correct TIN, but you do not have to sign the certification.

What Name and Number To Give the Requester

For this type of account:	Give name and SSN of:
1. Individual	The individual
2. Two or more individuals (joint account)	The actual owner of the account or, if combined funds, the first individual on the account [1]
3. Custodian account of a minor (Uniform Gift to Minors Act)	The minor [2]
4. a. The usual revocable savings trust (grantor is also trustee)	The grantor-trustee [1]
b. So-called trust account that is not a legal or valid trust under state law	The actual owner [1]
5. Sole proprietorship or disregarded entity owned by an individual	The owner [3]
6. Grantor trust filing under Optional Form 1099 Filing Method 1 (see Regulation section 1.671-4(b)(2)(i)(A))	The grantor*
For this type of account:	**Give name and EIN of:**
7. Disregarded entity not owned by an individual	The owner
8. A valid trust, estate, or pension trust	Legal entity [4]
9. Corporation or LLC electing corporate status on Form 8832 or Form 2553	The corporation
10. Association, club, religious, charitable, educational, or other tax-exempt organization	The organization
11. Partnership or multi-member LLC	The partnership
12. A broker or registered nominee	The broker or nominee
13. Account with the Department of Agriculture in the name of a public entity (such as a state or local government, school district, or prison) that receives agricultural program payments	The public entity
14. Grantor trust filing under the Form 1041 Filing Method or the Optional Form 1099 Filing Method 2 (see Regulation section 1.671-4(b)(2)(i)(B))	The trust

[1] List first and circle the name of the person whose number you furnish. If only one person on a joint account has an SSN, that person's number must be furnished.

[2] Circle the minor's name and furnish the minor's SSN.

[3] You must show your individual name and you may also enter your business or "DBA" name on the "Business name/disregarded entity" name line. You may use either your SSN or EIN (if you have one), but the IRS encourages you to use your SSN.

[4] List first and circle the name of the trust, estate, or pension trust. (Do not furnish the TIN of the personal representative or trustee unless the legal entity itself is not designated in the account title.) Also see *Special rules for partnerships* on page 1.

***Note.** Grantor also must provide a Form W-9 to trustee of trust.

Note. If no name is circled when more than one name is listed, the number will be considered to be that of the first name listed.

Secure Your Tax Records from Identity Theft

Identity theft occurs when someone uses your personal information such as your name, social security number (SSN), or other identifying information, without your permission, to commit fraud or other crimes. An identity thief may use your SSN to get a job or may file a tax return using your SSN to receive a refund.

To reduce your risk:

- Protect your SSN,
- Ensure your employer is protecting your SSN, and
- Be careful when choosing a tax preparer.

If your tax records are affected by identity theft and you receive a notice from the IRS, respond right away to the name and phone number printed on the IRS notice or letter.

If your tax records are not currently affected by identity theft but you think you are at risk due to a lost or stolen purse or wallet, questionable credit card activity or credit report, contact the IRS Identity Theft Hotline at 1-800-908-4490 or submit Form 14039.

For more information, see Publication 4535, Identity Theft Prevention and Victim Assistance.

Victims of identity theft who are experiencing economic harm or a system problem, or are seeking help in resolving tax problems that have not been resolved through normal channels, may be eligible for Taxpayer Advocate Service (TAS) assistance. You can reach TAS by calling the TAS toll-free case intake line at 1-877-777-4778 or TTY/TDD 1-800-829-4059.

Protect yourself from suspicious emails or phishing schemes. Phishing is the creation and use of email and websites designed to mimic legitimate business emails and websites. The most common act is sending an email to a user falsely claiming to be an established legitimate enterprise in an attempt to scam the user into surrendering private information that will be used for identity theft.

The IRS does not initiate contacts with taxpayers via emails. Also, the IRS does not request personal detailed information through email or ask taxpayers for the PIN numbers, passwords, or similar secret access information for their credit card, bank, or other financial accounts.

If you receive an unsolicited email claiming to be from the IRS, forward this message to *phishing@irs.gov*. You may also report misuse of the IRS name, logo, or other IRS property to the Treasury Inspector General for Tax Administration at 1-800-366-4484. You can forward suspicious emails to the Federal Trade Commission at: *spam@uce.gov* or contact them at *www.ftc.gov/idtheft* or 1-877-IDTHEFT (1-877-438-4338).

Visit IRS.gov to learn more about identity theft and how to reduce your risk.

Privacy Act Notice

Section 6109 of the Internal Revenue Code requires you to provide your correct TIN to persons (including federal agencies) who are required to file information returns with the IRS to report interest, dividends, or certain other income paid to you; mortgage interest you paid; the acquisition or abandonment of secured property; the cancellation of debt; or contributions you made to an IRA, Archer MSA, or HSA. The person collecting this form uses the information on the form to file information returns with the IRS, reporting the above information. Routine uses of this information include giving it to the Department of Justice for civil and criminal litigation and to cities, states, the District of Columbia, and U.S. commonwealths and possessions for use in administering their laws. The information also may be disclosed to other countries under a treaty, to federal and state agencies to enforce civil and criminal laws, or to federal law enforcement and intelligence agencies to combat terrorism. You must provide your TIN whether or not you are required to file a tax return. Under section 3406, payers must generally withhold a percentage of taxable interest, dividend, and certain other payments to a payee who does not give a TIN to the payer. Certain penalties may also apply for providing false or fraudulent information.

Certification
Regarding Debarment, Suspension and Ineligibility

As is required by the Federal Regulations Implementing Executive Order 12549, Debarment and Suspension, 45 CFR Part 76, Government-wide Debarment and Suspension, the applicant certifies, to the best of his or her knowledge and belief, that both it and its principals:

a. Are not presently debarred, suspended, proposed for debarment, declared ineligible, or voluntarily excluded from participation in this transaction by any federal department or agency;

b. Have not within a three-year period preceding this bid proposal and/or application been convicted of or had a civil judgment rendered against them for commission of fraud or a criminal offense in connection with obtaining, attempting to obtain, or performing a public (federal, state, or local) transaction or contract under a public transaction, violation of federal or state antitrust statutes or commission of embezzlement, theft, forgery, bribery, falsification or destruction of records, making false statements, or receiving stolen property;

c. Are not presently indicted for or otherwise criminally or civilly charged by a government entity with commission of any of the offenses enumerated herein; and

d. Have not within a three-year period preceding this bid proposal and/or application had one or more public transactions terminated for cause or default.

Signature:_____
Print Name:_____
Title:_____
Telephone Number:_____
Date:_____

If the bidder is unable to certify to all of the statements in this Certification, such bidder should attach an explanation to this proposal.

HIDALGO COUNTY
(Including all funding sources, programs, and entities)
REQUEST FOR QUALIFICATIONS
PROFESSIONAL APPRAISALS SERVICES AND/OR APPRAISAL REVIEW SERVICES ANNUAL POOL

RFQ No.: 2016-005-02-17-SMA

RFQ SUBMITTAL CHECK LIST

All forms listed below must be included in the RFQ response.

Indicate with a check mark (✓) the Forms completed and included in this response:

_____ Page 9 of Legal Notice

_____ Exhibit "C" -Acknowledgement forms (pages 3 and 4)

_____ Exhibit "D-1" - CIQ Form

_____ Exhibit "D-2" – CIS Form

_____ Exhibit "E" –Proposers Affidavit

_____ Vendor Bidder Application and IRS form W-9

_____ Certification Regarding Debarment

_____ 1 Original, 3 Copies, and 8 CD's containing a complete copy of Response.

_____ _____
SIGNATURE DATE

EXHIBIT “A”

SERVICES TO BE PROVIDED BY APPRAISER

Valuation Analyses

Cost Approach:	A cost approach will be considered as needed on each Appraisal, there being adequate data to develop a land value and the depreciation accrued to the improvements can be reasonably measured.
Sales Comparison Approach:	A sales approach will developed a value estimate and this approach reflects market behavior for this property type.
Income Approach:	An income approach will be applied if the subject is an income producing property and there is adequate data to develop a value estimate with this approach.
Hypothetical Conditions:	• The Appraiser Will Utilize his opinion on Hypothetical Conditions
Extraordinary Assumptions:	• The Appraiser Will Utilize any Extraordinary Assumptions and his opinion on Hypothetical Conditions

Limiting Conditions and Assumptions

Acceptance of and/or use of the report constitutes acceptance of the following limiting conditions and assumptions; these can only be modified by written documents executed by both parties.

The appraisal is to be used only for the purpose stated herein. While distribution of the appraisal in its entirety is at the discretion of the client, individual sections shall not be distributed; the report is intended to be used in whole and not in part.

No part of the appraisal, its value estimates or the identity of the firm or the appraiser(s) may be communicated to the public through advertising, public relations, media sales, or other media.

All files, work papers and documents developed in connection with the assignment are the property of The Real Estate Center. Information, estimates and opinions are verified where possible, but cannot be guaranteed. Plans provided are intended to assist the client in visualizing the property; no other use of these plans is intended or permitted.

No hidden or unapparent conditions of the property, subsoil or structure, which would make the property more or less valuable, will be discovered by the appraiser(s) or made known to the appraiser(s). No responsibility is assumed for such conditions or engineering necessary to discover them. Unless otherwise stated, the appraiser assumes there is no existence of hazardous materials or conditions, in any form, on or near the subject property.

Unless otherwise stated in the reports, the existence of hazardous substances, including without limitation asbestos, polychlorinated biphenyl, petroleum leakage, or agricultural chemicals, which may or may not be present on the property, will not be called to the attention of the appraiser nor did the appraiser become aware of such during the appraiser's inspection. The appraiser has no knowledge of the existence of such materials on or in the property unless otherwise stated. The appraiser, however, is not qualified to test for such substances. The presence of such hazardous substances may affect the value of the property. The value opinion developed herein is predicated on the assumption that no such hazardous substances exist on or in the property or in such proximity thereto, which would cause a loss in value. No responsibility is assumed for any such hazardous substances, nor for any expertise or knowledge required to discover them.

Unless stated herein, the property is assumed to be outside of areas where flood hazard insurance is mandatory. Maps used by public and private agencies to determine these areas are limited with respect to accuracy. Due diligence has been exercised in interpreting these maps, but no responsibility is assumed for misinterpretation.

Good title, free of liens, encumbrances and special assessments is assumed. No responsibility is assumed for matters of a legal nature.

Necessary licenses, permits, consents, legislative or administrative authority from any local, state or Federal government or private entity are assumed to be in place or reasonably obtainable.

It is assumed there are no zoning violations, encroachments, easements or other restrictions which would affect the subject property, unless otherwise stated.

The appraiser(s) are not required to give testimony in Court in connection with this appraisal. If the appraisers are subpoenaed pursuant to a court order, the client agrees to pay the appraiser(s) The Real Estate Center regular per diem rate plus expenses.

Appraisals are based on the data available at the time the assignment is completed. Amendments/modifications to appraisals based on new information made available after the appraisal was completed will be made, as soon as reasonably possible, for an additional fee.

Americans with Disabilities Act (ADA) of 1990
A civil rights act passed by Congress guaranteeing individuals with disabilities equal opportunity in public accommodations, employment, transportation, government services, and telecommunications. Statutory deadlines become effective on various dates between 1990 and 1997. The Real Estate Center has not made a determination regarding the subject's ADA compliance or non-compliance**. Non-compliance could have a negative impact on value, however this has not been considered or analyzed in this appraisal**.

EXHIBIT “B”

FEE SCHEDULE

APPRAISERS FEE SCHEDULE

Complete Land Appraisal Report (4 originals will be provided)	$2,000.00
Complete Land (plus damaged) (4 originals will be provided)	$2,200.00
Complete Improved complete taking of Properties (4 originals)	$3,200.00
Review Appraisal (including tabulations) (2 originals)	$1,000.00
Condemnation Hearings per/hr.	$ 200.00
Preparation to Condemnation Hearing	$ 400.00
Meetings will be by the hour	$ 50.00
The Fee for Revising an Appraisal Report will be as follows:	
$50.00 dollars an hour with a maximin fee of $300.00	
The cost for extra original reports is at a cost of (each)	$ 150.00

EXHIBIT “C”

INSURANCE REQUIREMENTS

CERTIFICATE OF LIABILITY INSURANCE

DATE (MM/DD/YYYY): 01/27/2017

THIS CERTIFICATE IS ISSUED AS A MATTER OF INFORMATION ONLY AND CONFERS NO RIGHTS UPON THE CERTIFICATE HOLDER. THIS CERTIFICATE DOES NOT AFFIRMATIVELY OR NEGATIVELY AMEND, EXTEND OR ALTER THE COVERAGE AFFORDED BY THE POLICIES BELOW. THIS CERTIFICATE OF INSURANCE DOES NOT CONSTITUTE A CONTRACT BETWEEN THE ISSUING INSURER(S), AUTHORIZED REPRESENTATIVE OR PRODUCER, AND THE CERTIFICATE HOLDER.

IMPORTANT: If the certificate holder is an ADDITIONAL INSURED, the policy(ies) must be endorsed. If SUBROGATION IS WAIVED, subject to the terms and conditions of the policy, certain policies may require an endorsement. A statement on this certificate does not confer rights to the certificate holder in lieu of such endorsement(s).

PRODUCER	CONTACT NAME: Eddie Cavazos
Jude Insurance 4900 W. Expressway 83, Ste. # 245 McAllen, Texas 78501	PHONE (A/C, No, Ext): 956-340-5824 FAX (A/C, No): 956-435-0145 E-MAIL ADDRESS: judeinsurance@att.net

INSURER(S) AFFORDING COVERAGE	NAIC #
INSURER A : The Hartford Insurance Co.	
INSURER B :	
INSURER C :	
INSURER D :	
INSURER E :	
INSURER F :	

INSURED

CruzBro RGV, LLC d.b.a. The Real Estate Center
P.O. Box 810
Mission, Texas 78573

COVERAGES **CERTIFICATE NUMBER:** **REVISION NUMBER:**

THIS IS TO CERTIFY THAT THE POLICIES OF INSURANCE LISTED BELOW HAVE BEEN ISSUED TO THE INSURED NAMED ABOVE FOR THE POLICY PERIOD INDICATED. NOTWITHSTANDING ANY REQUIREMENT, TERM OR CONDITION OF ANY CONTRACT OR OTHER DOCUMENT WITH RESPECT TO WHICH THIS CERTIFICATE MAY BE ISSUED OR MAY PERTAIN, THE INSURANCE AFFORDED BY THE POLICIES DESCRIBED HEREIN IS SUBJECT TO ALL THE TERMS, EXCLUSIONS AND CONDITIONS OF SUCH POLICIES. LIMITS SHOWN MAY HAVE BEEN REDUCED BY PAID CLAIMS.

INSR LTR	TYPE OF INSURANCE	ADDL INSR	SUBR WVD	POLICY NUMBER	POLICY EFF (MM/DD/YYYY)	POLICY EXP (MM/DD/YYYY)	LIMITS	
A	**GENERAL LIABILITY** X COMMERCIAL GENERAL LIABILITY CLAIMS-MADE [X] OCCUR GEN'L AGGREGATE LIMIT APPLIES PER: X POLICY PRO-JECT LOC	X		01 SBMRG9903	01/23/2017	02/23/2018	EACH OCCURRENCE DAMAGE TO RENTED PREMISES (Ea occurrence) MED EXP (Any one person) PERSONAL & ADV INJURY GENERAL AGGREGATE PRODUCTS - COMP/OP AGG	$ 500,000 $ 100,000 $ 5,000 $ 500,000 $ 1,000,000 $ 1,000,000
	AUTOMOBILE LIABILITY ANY AUTO ALL OWNED AUTOS SCHEDULED AUTOS HIRED AUTOS NON-OWNED AUTOS						COMBINED SINGLE LIMIT (Ea accident) BODILY INJURY (Per person) BODILY INJURY (Per accident) PROPERTY DAMAGE (Per accident)	$ $ $ $
	UMBRELLA LIAB OCCUR **EXCESS LIAB** CLAIMS-MADE DED RETENTION $						EACH OCCURRENCE AGGREGATE	$ $
	WORKERS COMPENSATION AND EMPLOYERS' LIABILITY Y / N ANY PROPRIETOR/PARTNER/EXECUTIVE OFFICER/MEMBER EXCLUDED? N / A (Mandatory in NH) If yes, describe under DESCRIPTION OF OPERATIONS below						WC STATU-TORY LIMITS OTH-ER E.L. EACH ACCIDENT E.L. DISEASE - EA EMPLOYEE E.L. DISEASE - POLICY LIMIT	 $ $ $

DESCRIPTION OF OPERATIONS / LOCATIONS / VEHICLES (Attach ACORD 101, Additional Remarks Schedule, if more space is required)

Real Estate Appraiser - 4900 W. Expressway 83, Ste. # 229, McAllen, Texas 78501

County of Hidalgo shall be named as additional insured on Commercial General Liability policy.

CERTIFICATE HOLDER

Hidalgo County
Attn: Purchasing Department
2812 S Highway Bus. 281
Edinburg, Texas 78539

CANCELLATION

SHOULD ANY OF THE ABOVE DESCRIBED POLICIES BE CANCELLED BEFORE THE EXPIRATION DATE THEREOF, NOTICE WILL BE DELIVERED IN ACCORDANCE WITH THE POLICY PROVISIONS.

AUTHORIZED REPRESENTATIVE

© 1988-2010 ACORD CORPORATION. All rights reserved.
The ACORD name and logo are registered marks of ACORD

Affidavit & Indemnity Agreement

Date: May 16 2017

Affiant: Rene De La Cruz, Manager
CruzBro RGV, LLC dba The Real Estate Center
4900 W. Exp. 83, Ste 229
McAllen, Texas 78501
(956) 227-0928

Affiant on oath swears that the following statements are true and are within the personal knowledge of Affiant.

Affiant, Rene De La Cruz states he is a sole proprietor doing business as CruzBro RGV LLC dba The Real Estate Center with Hidalgo County under agreement# C-17-102-05-30. Affiant will provide Appraisal Services for Hidalgo County Precinct No. 3.

Affiant further states that he has no employees and does not anticipate employing any during the term of this contract. In the event Affiant does employ any staff during the contract, Affiant shall immediately notify Hidalgo County and obtain the Workers Compensation required by law. Affiant further acknowledges that failure to do so will result in cancellation of the purchase order.

Affiant agrees to indemnity, defend and hold harmless the County of Hidalgo and its agents, employees and elected officials from and against any and all claims, suits, demands and causes of action, of any kind or nature, arising out of or in any way relating to the services performed by Affiant

Further Affiant sayeth not.

Printed Name of Affiant: Rene De La Cruz

SWORN AND SUBSCRIBED TO under oath before me on May 16, 2017.

Notary Public, State of Texas

NANCY Y OBREGON
ID#1039075-7
My Comm Exp 12-11-2019
Notary Public
STATE OF TEXAS

CERTIFICATE OF LIABILITY INSURANCE

DATE (MM/DD/YYYY): 03/10/2017

THIS CERTIFICATE IS ISSUED AS A MATTER OF INFORMATION ONLY AND CONFERS NO RIGHTS UPON THE CERTIFICATE HOLDER. THIS CERTIFICATE DOES NOT AFFIRMATIVELY OR NEGATIVELY AMEND, EXTEND OR ALTER THE COVERAGE AFFORDED BY THE POLICIES BELOW. THIS CERTIFICATE OF INSURANCE DOES NOT CONSTITUTE A CONTRACT BETWEEN THE ISSUING INSURER(S), AUTHORIZED REPRESENTATIVE OR PRODUCER, AND THE CERTIFICATE HOLDER.

IMPORTANT: If the certificate holder is an ADDITIONAL INSURED, the policy(ies) must have ADDITIONAL INSURED provisions or be endorsed. If SUBROGATION IS WAIVED, subject to the terms and conditions of the policy, certain policies may require an endorsement. A statement on this certificate does not confer rights to the certificate holder in lieu of such endorsement(s).

PRODUCER

Joel Bazan(194232N)
118 S Shary Rd

Mission TX 78572-8214

CONTACT NAME:

PHONE (A/C, NO, EXT): 956-519-1780
FAX (A/C, NO): 956-519-1775

E-MAIL ADDRESS: jbazan@farmersagent.com

INSURER(S) AFFORDING COVERAGE		NAIC #
INSURER A:	Truck Insurance Exchange	21709
INSURER B:	Farmers Insurance Exchange	21652
INSURER C:	Mid Century Insurance Company	21687
INSURER D:	Farmers Texas County Mutual Insurance Company	24392
INSURER E:		
INSURER F:		

INSURED

CRUZBRO RGV LLC., dba THE REAL ESTATE CENTER
PO BOX 810
3308 N CONWAY MISSION TX 78573

COVERAGES **CERTIFICATE NUMBER:** **REVISION NUMBER:**

THIS IS TO CERTIFY THAT THE POLICIES OF INSURANCE LISTED BELOW HAVE BEEN ISSUED TO THE INSURED NAME ABOVE FOR THE POLICY PERIOD INDICATED. NOTWITHSTANDING ANY REQUIREMENT, TERM OR CONDITION OF ANY CONTRACT OR OTHER DOCUMENT WITH RESPECT TO WHICH THIS CERTIFICATE MAY BE ISSUED OR MAY PERTAIN, THE INSURANCE AFFORDED BY THE POLICIES DESCRIBED HEREIN IS SUBJECT TO ALL THE TERMS, EXCLUSIONS AND CONDITIONS OF SUCH POLICIES. LIMITS SHOWN MAY HAVE BEEN REDUCED BY PAID CLAIMS.

INSR LTR	TYPE OF INSURANCE	ADDTL INSD	SUBR WVD	POLICY NUMBER	POLICY EFF (MM/DD/YYYY)	POLICY EXP (MM/DD/YYYY)	LIMITS	
	COMMERCIAL GENERAL LIABILITY						EACH OCCURRENCE	$
	☐ CLAIMS-MADE ☐ OCCUR						DAMAGE TO RENTED PREMISES (Ea Occurrence)	$
							MED EXP (Any one person)	$
							PERSONAL & ADV INJURY	$
	GEN'L AGGREGATE LIMIT APPLIES PER:						GENERAL AGGREGATE	$
	☐ POLICY ☐ PROJECT ☐ LOC						PRODUCTS - COMP/OP AGG	$
	☐ OTHER:							$
D	AUTOMOBILE LIABILITY						COMBINED SINGLE LIMIT (Ea accident)	$
	☐ ANY AUTO						BODILY INJURY (Per person)	$ 500,000
	☐ OWNED AUTOS ONLY ☒ SCHEDULED AUTOS	Y		604707982	01/14/2017	01/14/2018	BODILY INJURY (Per accident)	$ 500,000
	☐ HIRED AUTOS ONLY ☐ NON-OWNED AUTOS ONLY						PROPERTY DAMAGE (Per accident)	$ 500,000
								$
	☐ UMBRELLA LIAB ☐ OCCUR						EACH OCCURRENCE	$
	☐ EXCESS LIAB ☐ CLAIMS-MADE						AGGREGATE	$
	☐ DED ☐ RETENTION $							$
	WORKERS COMPENSATION AND EMPLOYERS' LIABILITY						☐ PER STATUTE ☐ OTHER	$
	ANY PROPRIETOR/PARTNER/ EXECUTIVE OFFICER/MEMBER EXCLUDED? (Mandatory in NH) Y/N ☐	N/A					E.L. EACH ACCIDENT	$
	If yes, describe under DESCRIPTION OF OPERATIONS below						E.L. DISEASE - EA EMPLOYEE	$
							E.L. DISEASE - POLICY LIMIT	$

DESCRIPTION OF OPERATIONS/LOCATIONS/VEHICLES (ACORD 101, Additional Remarks Schedule, may be attached if more space is required)
2008 CHEVROLET C1500 TAHO; VIN: 1GNFC13018R110413

CERTIFICATE HOLDER

HIDALGO COUNTY
2812 S BUSINESS HIGHWAY 281

EDINBURG TX 78539

CANCELLATION

SHOULD ANY OF THE ABOVE DESCRIBED POLICIES BE CANCELLED BEFORE THE EXPIRATION DATE THEREOF, NOTICE WILL BE DELIVERED IN ACCORDANCE WITH THE POLICY PROVISIONS.

AUTHORIZED REPRESENTATIVE

©1988-2015 ACORD CORPORATION. All Rights Reserved

The ACORD name and logo are registered marks of ACORD

CERTIFICATE OF LIABILITY INSURANCE

DATE (MM/DD/YYYY): 04/03/2017

THIS CERTIFICATE IS ISSUED AS A MATTER OF INFORMATION ONLY AND CONFERS NO RIGHTS UPON THE CERTIFICATE HOLDER. THIS CERTIFICATE DOES NOT AFFIRMATIVELY OR NEGATIVELY AMEND, EXTEND OR ALTER THE COVERAGE AFFORDED BY THE POLICIES BELOW. THIS CERTIFICATE OF INSURANCE DOES NOT CONSTITUTE A CONTRACT BETWEEN THE ISSUING INSURER(S), AUTHORIZED REPRESENTATIVE OR PRODUCER, AND THE CERTIFICATE HOLDER.

IMPORTANT: If the certificate holder is an ADDITIONAL INSURED, the policy(ies) must be endorsed. If SUBROGATION IS WAIVED, subject to the terms and conditions of the policy, certain policies may require an endorsement. A statement on this certificate does not confer rights to the certificate holder in lieu of such endorsement(s).

PRODUCER	CONTACT NAME:	
BizInsure LLC 222 Broadway Suite 6 Oakland, CA 94607	PHONE (A/C, No, Ext): (415) 704-1408	FAX (A/C, No):
	E-MAIL ADDRESS: support@bizinsure.com	
	INSURER(S) AFFORDING COVERAGE	NAIC #
	INSURER A : Liberty Insurance Underwriters	19917
CruzBRO RGV, LLC dba The Real Estate Center 4900 W. Express Way 83 Suite 229 McAllen, TX 78501	INSURER B :	
	INSURER C :	
	INSURER D :	
	INSURER E :	
	INSURER F :	

COVERAGES CERTIFICATE NUMBER: REVISION NUMBER:

THIS IS TO CERTIFY THAT THE POLICIES OF INSURANCE LISTED BELOW HAVE BEEN ISSUED TO THE INSURED NAMED ABOVE FOR THE POLICY PERIOD INDICATED. NOTWITHSTANDING ANY REQUIREMENT, TERM OR CONDITION OF ANY CONTRACT OR OTHER DOCUMENT WITH RESPECT TO WHICH THIS CERTIFICATE MAY BE ISSUED OR MAY PERTAIN, THE INSURANCE AFFORDED BY THE POLICIES DESCRIBED HEREIN IS SUBJECT TO ALL THE TERMS, EXCLUSIONS AND CONDITIONS OF SUCH POLICIES. LIMITS SHOWN MAY HAVE BEEN REDUCED BY PAID CLAIMS.

INSR LTR	TYPE OF INSURANCE	ADDL INSR	SUBR WVD	POLICY NUMBER	POLICY EFF (MM/DD/YYYY)	POLICY EXP (MM/DD/YYYY)	LIMITS	
	GENERAL LIABILITY						EACH OCCURRENCE	$
	☐ COMMERCIAL GENERAL LIABILITY						DAMAGE TO RENTED PREMISES (Ea occurrence)	$
	☐ CLAIMS-MADE ☐ OCCUR						MED EXP (Any one person)	$
							PERSONAL & ADV INJURY	$
							GENERAL AGGREGATE	$
	GEN'L AGGREGATE LIMIT APPLIES PER:						PRODUCTS - COMP/OP AGG	$
	☐ POLICY ☐ PRO-JECT ☐ LOC							$
	AUTOMOBILE LIABILITY						COMBINED SINGLE LIMIT (Ea accident)	$
	☐ ANY AUTO						BODILY INJURY (Per person)	$
	☐ ALL OWNED AUTOS ☐ SCHEDULED AUTOS						BODILY INJURY (Per accident)	$
	☐ HIRED AUTOS ☐ NON-OWNED AUTOS						PROPERTY DAMAGE (Per accident)	$
								$
	☐ UMBRELLA LIAB ☐ OCCUR						EACH OCCURRENCE	$
	☐ EXCESS LIAB ☐ CLAIMS-MADE						AGGREGATE	$
	☐ DED ☐ RETENTION $							$
	WORKERS COMPENSATION AND EMPLOYERS' LIABILITY Y/N						WC STATU-TORY LIMITS ☐ OTH-ER	
	ANY PROPRIETOR/PARTNER/EXECUTIVE OFFICER/MEMBER EXCLUDED? ☐ N/A (Mandatory in NH)						E.L. EACH ACCIDENT	$
	If yes, describe under DESCRIPTION OF OPERATIONS below						E.L. DISEASE - EA EMPLOYEE	$
							E.L. DISEASE - POLICY LIMIT	$
A	Professional Liability Insurance (Errors & Omissions Insurance)			BIZ101314-01	06/21/2016	06/21/2017	Coverage: $1,000,000 Aggregate: $1,000,000 Deductible: $1,000	

DESCRIPTION OF OPERATIONS / LOCATIONS / VEHICLES (Attach ACORD 101, Additional Remarks Schedule, if more space is required)

This certificate is issued for evidence purposes only.

CERTIFICATE HOLDER

Hidalgo County
Attn: Purchasing Department
2812 S. Highway Bus. 281
Edinburg, TX 78539

LOAN #:

ID #:

CANCELLATION

SHOULD ANY OF THE ABOVE DESCRIBED POLICIES BE CANCELLED BEFORE THE EXPIRATION DATE THEREOF, NOTICE WILL BE DELIVERED IN ACCORDANCE WITH THE POLICY PROVISIONS.

AUTHORIZED REPRESENTATIVE

© 1988-2010 ACORD CORPORATION. All rights reserved.

The ACORD name and logo are registered marks of ACORD

AI-59993 **Purchasing Department** **22. E. 1.**

CC - REGULAR

Meeting Date: 05/30/2017

Submitted For: Joseph Palacios, COMM. PCT. #4 **Submitted By:** Nick Perez, COMM. PCT. #4

Department: COMM. PCT. #4

Information

CAPTION

Acceptance and approval of Change Order No. 10 (decrease) for deduction of Landscaping Allowance to zero-out Contract No. C-14-067-06-03 with JCon Construction, LLC. as reviewed/approved by project architect of record, Mata-Garcia Architects, LLP for: Hidalgo County Precinct No. 4 Project: Construction of the Linn-San Manuel Emergency Services Facilities with authority for County Judge, or Court Member to execute document.

BACKGROUND

Fiscal Impact

CALENDAR YEAR: **ACCT. #:**

FUNDS AVAILABLE Y/N?: **MATCHING FUNDS Y/N?:**

BUDGETARY IMPACT:

Fiscal impact detailed in Change Order document reflection reduction in a new total contract amount.

Attachments

Change Order 10

Form Review

Inbox	Reviewed By	Date
Purchasing - Internal	Marty Salazar	05/25/2017 10:28 AM
Budget & Management	Veronica Ortiz	05/25/2017 10:36 AM
Final Approval	Monica Salinas	05/26/2017 02:58 PM

Form Started By: Nick Perez Started On: 05/24/2017 04:34 PM

Final Approval Date: 05/26/2017

AIA® Document G701™ – 2001

Change Order

PROJECT *(Name and address)*: Hidalgo County Pct. No. 4 Linn-San Manuel Emergency Services Facility Linn - San Manuel Texas	**CHANGE ORDER NUMBER:** 010 **DATE:** April 11, 2017	OWNER: ☒ ARCHITECT: ☒ CONTRACTOR: ☒
TO CONTRACTOR *(Name and address)*: JCon Construction LLC 604 Palmview Dr., Palmview, Tx.	**ARCHITECT'S PROJECT NUMBER:** 201310 **CONTRACT DATE:** August 05, 2014 **CONTRACT FOR:** General Construction	FIELD: ☐ OTHER: ☐

THE CONTRACT IS CHANGED AS FOLLOWS:
(Include, where applicable, any undisputed amount attributable to previously executed Construction Change Directives)
Deletion of the Landscaping Allowance to zero-out the contract balance back to Hidalgo County Pct. No. 4

The original Contract Sum was	$	1,350,000.00
The net change by previously authorized Change Orders	$	904.20
The Contract Sum prior to this Change Order was	$	1,350,904.20
The Contract Sum will be decreased by this Change Order in the amount of	$	25,000.00
The new Contract Sum including this Change Order will be	$	1,325,904.20

The Contract Time will be unchanged by Zero (0) days.
The date of Substantial Completion as of the date of this Change Order therefore is April 17, 2015

NOTE: This Change Order does not include changes in the Contract Sum, Contract Time or Guaranteed Maximum Price which have been authorized by Construction Change Directive until the cost and time have been agreed upon by both the Owner and Contractor, in which case a Change Order is executed to supersede the Construction Change Directive.

NOT VALID UNTIL SIGNED BY THE ARCHITECT, CONTRACTOR AND OWNER.

Mata+Garcia Architects LLP **ARCHITECT** *(Firm name)*	JCon Construction LLC **CONTRACTOR** *(Firm name)*	County of Hidalgo / Pct. No. 4 **OWNER** *(Firm name)*
1314 Ivy Ave., McAllen, Tx. 78501 **ADDRESS**	604 Palmview Dr., Palmview, Tx. 78574 **ADDRESS**	1051 N. Doolittle Rd., Edinburg,Tx 78542 **ADDRESS**
BY *(Signature)*	**BY** *(Signature)*	**BY** *(Signature)*
Hector Rene Garcia *(Typed name)*	Juan Peña Jr. *(Typed name)*	*(Typed name)*
April 11, 2017 **DATE**	April 11, 2017 **DATE**	**DATE**

AIA Document G701™ – 2001. Copyright © 1979, 1987, 2000 and 2001 by The American Institute of Architects. **All rights reserved.** **WARNING: This AIA® Document is protected by U.S. Copyright Law and International Treaties. Unauthorized reproduction or distribution of this AIA® Document, or any portion of it, may result in severe civil and criminal penalties, and will be prosecuted to the maximum extent possible under the law.** This document was produced by AIA software at 10:15:22 on 04/11/2017 under Order No.3215130375_1 which expires on 11/21/2017, and is not for resale.
User Notes: (1093892451)

AI-60003 **Purchasing Department** **22. F. 1.**

CC - REGULAR

Meeting Date: 05/30/2017

Submitted For: Marty Salazar, PURCHASING DEPT.

Submitted By: Heidi Ortiz, PURCHASING DEPT.

Department: PURCHASING DEPT.

Information

CAPTION

Requesting authority to advertise and procurement packet [drafted/developed by HC-DH&HS & Purchasing Dept.] the project titled: "Online Pharmacy Billing Services" - RFP No.: 2017-149-06-21-HGO for County Indigent Health Care Level 2 Pilot Program with draft contract document subject to final legal review/approval.

BACKGROUND

Time-line
06-03-17 - First Advertisement
06-10-17 - Second Advertisement
06-21-17 - Opening

Fiscal Impact

CALENDAR YEAR: 2017 **ACCT. #:** 7-1100-444-00-240-005-0-843

FUNDS AVAILABLE Y/N?: **MATCHING FUNDS Y/N?:**

BUDGETARY IMPACT:

Attachments

Packet
Legal Approval
Approval of Specs

Form Review

Inbox	Reviewed By	Date
Purchasing - Internal	Marty Salazar	05/26/2017 11:32 AM
Budget & Management	Veronica Ortiz	05/26/2017 11:35 AM
Final Approval	Monica Salinas	05/26/2017 02:58 PM
Form Started By: Heidi Ortiz		Started On: 05/25/2017 10:12 AM
Final Approval Date: 05/26/2017		

Hidalgo County Purchasing Office
2812 S. Business Highway 281
New Administration Building
Edinburg, Texas 78539
(956) 318-2626/ Fax: (956) 292-7612

June 5, 2017

_____

_____

_____

_____

Re: **HIDALGO COUNTY** HEALTH **DEPARTMENT**
Request for Proposals –**"Online Pharmacy Billing Services"**
RFP NO: 2017-149-06-21-HGO

Dear Respondents:

Enclosed please find a Request for Proposals (RFP) packet for your review and consideration.

Hidalgo County Purchasing Department welcomes and appreciates your participation in the RFP process.

If any further assistance is required, please do not hesitate to call the Purchasing Department at (956) 318-2626.

Sincerely,

Martha L. Salazar, CPPB
Hidalgo County Purchasing Agent

MLS/*hgo*

Enclosures

Hidalgo County Purchasing Department
2812 S. Business Highway 281
Edinburg, Texas 78539
(956) 318-2626/ Fax: (956) 292-7612

REQUEST FOR PROPOSAL (RFP)

TABLE OF CONTENTS

HIDALGO COUNTY
(Including all funding sources)
"Online Pharmacy Billing Services"
RFP NO: 2017-149-06-21-HGO

ITEM	DESCRIPTION	NO. OF PAGES
1.	Request for Proposal Letter	1
2.	Request for Proposal , Legal Notice	9
3.	Exhibit A, Requirements	7
4.	Exhibit B, Evaluation Form	2
5.	Exhibit C, Insurance Requirements, Insurance/Project Acknowledgement Forms	4
6.	Exhibit D,CIQ Conflict of Interest Questionnaire (if applicable)	3
7.	Exhibit E, Vendor/Bidder Application and W-9 form	7
8.	Exhibit F, Certification Regarding Debarment	2
9.	Exhibit G, Title VI - Appendices "A" through "E"	6
10.	Exhibit H, Proposer's Affidavit	2
11.	RFP Submittal Checklist	1
12.	Draft Professional Service Agreement	11

The above-mentioned items shall be found in the Request for Proposal (RFP) packet that is attached herewith. Should you find that any item is not attached in its entirety please contact Purchasing by calling (956) 318-2626, advise of missing documentation, and Purchasing will forward information either through facsimile or by U.S. Mail.

Thank you.

Martha L Salazar
Martha L. Salazar, CPPB, Purchasing Agent

6-5-17
Date

RFP NO: 2017-149-06-21-HGO	BUYER III: Heidi Garcia Ortiz	Tel. No: (956) 318-2626

REQUEST FOR PROPOSALS

Hidalgo County
Edinburg, Texas

"ONLINE PHARMACY BILLING SERVICES"
(All funding sources)

BID OPENING DATE

JUNE 21, 2017 @ 9:30 a.m.

Contact Person: Heidi Garcia Ortiz, Buyer III

Martha L. Salazar, CPPB, Purchasing Agent
Hidalgo County Purchasing Department
Administration Building
Physical Address: 2802 S. Business Hwy. 281
Mailing/US Postal Address: 2812 S. Business Hwy. 281
Edinburg, Texas 78539
(956) 318-2626

1) Sealed proposals will be received for **"Hidalgo County– Online Pharmacy Billing Services",** in accordance with the requirements attached hereto as Exhibit "A." Proposals should address all requirements set forth. Proposers may suggest substitutions of features which they feel would be in the best interest of Hidalgo County ("County"). A strong rationale must be presented for any deviation from the requirements. Hidalgo County reserves the right to reject the deviation and its effect on the overall proposal.

2) **One (1) original and seven (7) copies** of all RFPs and **one (1) CD in PDF format** are required, with the vendor's name and address clearly typed/printed on upper left-hand corner and the proper notation clearly typed/printed on the lower left-hand corner of the envelope and/or package, **RFP NO: 2017-149-06-21-HGO - Hidalgo County-(all funding sources) "Online Pharmacy Billing Services"** and in County's Purchasing Department, **physical address:** 2802 S. Business Hwy. 281; **mailing address:** 2812 S. Hwy. Business 281, Administration Building, Edinburg, Texas, **on or before 9:30 a.m., Wednesday, June 21, 2017.**

NO FACSIMILES, EMAILS OR LATE ARRIVALS WILL BE ACCEPTED. ANY RFP RECEIVED AFTER THAT TIME WILL NOT BE OPENED AND WILL BE RETURNED. OVERNIGHT MAIL MUST ALSO BE PROPERLY LABELED ON THE OUTSIDE OF EXPRESS ENVELOPE OR PACKAGE WITH REFERENCE TO RFP NO: 2017-149-06-21-HGO - Hidalgo County (all funding sources)- Online Pharmacy Billing Services". Hidalgo County reserves the right to refuse and reject any/all proposals and to waive any/all formalities or technicalities or to accept the proposal considered the best and most advantageous to Hidalgo County.

Additionally, all forms listed below must be properly executed and included with your RFP:

1. Legal Notice (See page 9);
2. Insurance pages with Acknowledgment Forms (See **Exhibit "C"**);
3. Form CIQ-Conflict of Interest Questionnaire (See **Exhibit "D"**);
4. Vendor Bidder Application & W-9 forms (See **Exhibit "E"**);
5. Certification Regarding Debarment (See **Exhibit "F"**);
6. Proposer's Affidavit (See Exhibit "H"); and
7. RFP Submittal Check List (See page following Proposer's Affidavit)
8. SAMS.gov Registration Acknowledgement (See Number 18 below).

3) Hidalgo County reserves the right to **A.** separate and accept, or eliminate any item(s) listed under this proposal that it deems necessary to accommodate budgetary and/or operational requirements; **B.** reject any or all proposals submitted and further reserves the right to design the evaluation criteria to be used in selecting the lowest and best proposal for approval. Receipt of any proposal shall under no circumstance obligate County to accept the lowest dollar proposal and; **C.** Award of this contract shall be made to the responsible offeror whose proposal is determined to be the best evaluated offer resulting from negotiation, taking into consideration the relative importance of price and other evaluation factors as herein set forth.

4) Failure of the delivered item(s) to perform as specified or failure to meet the stated delivery schedule shall release Hidalgo County from all obligations to the contracting party with regard to the item(s) in question. In such event, County may elect to award the contract to the next-lowest responsible proposer or to reject all proposals and re-advertise.

5) For work to be performed at a County owned or operated location, each proposer shall, in its sole discretion, visit the job site before preparing the proposal and thoroughly familiarize himself/herself with existing conditions. Proposer should take field dimensions and note all circumstances which affect the dollar amount of the proposal.

6) Descriptive specifications are referenced in this document to indicate the general kind and quality of equipment desired by Hidalgo County. Due to various styles and models of equipment, proposers are required to include illustrations, specifications, explanation of warranties, and service data with their proposal including catalog numbers and any necessary references.

7) No proposal may be withdrawn within sixty (60) days from the scheduled time to open proposals.

8) Proposed prices are to remain firm for a minimum of ninety (90) days after priced proposal opening.

9) Any interpretations, amendments, corrections or changes to this proposal document must be in a written addendum and signed by the County Judge or his designee. Addenda will be mailed to all who are known to have received a copy of the Request for Proposals. Proposers shall acknowledge receipt of all addenda as a part of their proposal.

10) County reserves the right to accept or reject any or all proposals.

11) Costs are to be net F.O.B., County Prepaid.

12) The county is exempt from Federal Excise Tax, State Tax, and Local Tax. Do Not include tax in cost figure. If it is determined that tax was included in the cost figures it will not be included in the tabulation of any awards. Tax exemption certificates will be furnished upon request.

13) Funds for this procurement have been provided through the County budget for this fiscal year only. County, on an annual basis, has the right to reconsider a contract during the budget process for ensuing years if financial resources of County are insufficient to meet the liabilities of said contract. The award of a proposal or contract hereunder will not be construed to create a debt of the County which is payable out of funds beyond the current fiscal year.

14) Upon award and prior to execution of a contract, Sole Proprietorships are required to submit a copy of their social security card to the Hidalgo County Auditor's Office in order to establish an account with the County. All awarded vendors must submit a completed W-9 and a copy of their Federal ID Number Certificate.

15) **DELIVERY INSTRUCTIONS FOR GOODS AND SERVICES: (If applicable)**

- No deliveries accepted after 3:00 P.M., Monday-Friday.
- At least seventy-two (72) hours prior notice of delivery must be given to Martha L. Salazar, CPPB, Purchasing Agent before delivery will be accepted.
- If you need additional information call the office listed below:

Hidalgo County Purchasing Department
Martha L. Salazar, CPPB, Purchasing Agent
(956) 318-2626

16) BILLING AND PAYMENT INSTRUCTIONS:

- Invoices must include:
  a) Name and address of successful proposer
  b) Name and address of receiving department or official
  c) Purchase Order Number and Contract Number (if any)
  d) Notation-**"Hidalgo County- Online Pharmacy Billing Services "**
  e) Descriptive information as to the items or services delivered, including product code, item number, quantity, etc.

- Discount payments will be considered when offered.

- Contact person for Billing and Payment questions:

Hidalgo County Auditor's Office
Ray Eufracio, County Auditor
2808 S. Business Hwy. 281
Edinburg, TX 78539
956-318-2511

17) SCHEDULE OF EVENTS:

Proposal Acceptance Date Opening, 9:30 A.M.	**June 21, 2017**
Award of Contract:	
Commence Service or Products:	

18) BID OR PERFORMANCE BOND AND DEBARMENT CERTIFICATION; PAYMENT UNDER CONTRACT:

- If the contract proposed is for the construction of public works or is for a contract for goods and services exceeding $100,000, all bidders shall furnish a good and sufficient bid bond in the amount of five percent of the total contract price. A bid bond must be executed by a surety company authorized to do business in Texas. **All participants are required to furnish a certification or acknowledgment stating that the contractor or vendor is free from suspension or debarment pursuant to federal regulation 45CFR76. Register at SAMs System for Award Management @ www.sam.gov.**

- Together with the signing of a contract or issuance of a purchase order following the acceptance of a proposal, and prior to the commencement of the actual work, the proposer shall furnish a performance bond to the County for the full amount of the contract, if that contract exceeds $50,000.

- If the contract is for $50,000 or less, no money will be paid to the contractor until completion and acceptance of the work or the fulfillment of the purchase obligation to the County, and, if applicable, the receipt by County of satisfactory evidence that all subcontractors and material men have been paid.

- If a contract is for the construction, alteration or repair of public buildings or public works, the contractor *shall* provide a payment bond for a contract in excess of Twenty-Five Thousand Dollars ($25,000.00), as required by Tex. Govt. Code Ch. 2253.

- For requirements contracts, bond requirements are determined by applying the proposed unit price to the estimated quantities included in the specifications.

19) **TITLE VI NOTICE/NONDISCRIMATION**

a. "The County of Hidalgo, in accordance with the provisions of Title VI of the Civil Rights Act of 1964 (78 Stat.252, 42 U.S.C. §§2000d to 2000d-4) and the Regulations, hereby notifies all bidders that it will affirmatively ensure that any contract entered into pursuant to this advertisement, disadvantaged business enterprises will be afforded full and fair opportunity to submit bids in response to this invitation and will not be discriminated against on the grounds of race, color, or national origin in consideration for an award."

b. The appropriate clauses of Appendices "A" through "E" as delineated in the USDOT Standard Title VI/Nondiscrimination Assurances - Specific Assurances are hereby incorporated by reference as applicable. Title VI Appendices "A" through "E" are attached as **Exhibit "G.**

c. The bidder will attach all applicable notices to which it is obligated to provide or submit as part of the bid, including Form FHWA 1273 to be submitted by all contractors and subcontractors in relation to construction contracts.

20) **ETHICAL STANDARDS:**

- It shall be a breach of ethics to offer, give or agree to give any elected official, department head or employee, or former elected official, department head or employee, of the County, or for any elected official, department head or employee or former elected official, department head or employee of the County, to solicit, demand, accept or agree to accept from another person, entity or organization, a gratuity or an offer of employment in connection with any decision, approval, disapproval, recommendation, preparation or any part of a program requirement or purchase request, influencing the content of any specification or procurement standard, rendering of advice, investigation, auditing, or in any other advisory capacity in any proceeding or application, request for ruling, determination, claim or controversy, or other particular matter pertaining to any program requirement or a contract or subcontract, or to any solicitation or proposal therefore pending before any department or agency of the County.

- It shall be a breach of ethics for any payment, gratuity or offer of employment to be made by or on behalf of a subcontractor under a contract to the prime contractor or higher tier subcontractor for any contract for the County, or any person associated therewith, as an inducement for the award of a subcontract or order.

- No public official shall have an interest in a contract awarded hereunder except in accordance with Tex. Loc. Govt. Code Chapter 171.

21) **DISCLOSURE OF CONFLICT OF INTEREST:**

- Effective **January 1, 2016**, Chapter 176 of the Texas Local Government Code requires that any vendor, person, consultant or contractor considering doing business with Hidalgo County ("the County") to disclose in the Conflict of Interest Questionnaire (the "CIQ") attached as **Exhibit D,** the vendor, person consultant or

contractor's affiliation or business relationship that might cause a conflict of interest with the County. By law, the CIQ must be filed with the Hidalgo County Clerk's Office no later than the seventh business day after the date the person becomes aware of facts that require that statement to be filed. The disclosure requirement applies to a person or business who contract or seeks to contract with Hidalgo County for the sale or purchase of property, goods or service. Any purchase order or contract resulting from this process shall be considered null and void if the successful Proposer fails to comply with Texas Local Government Code Chapter 176. Vendors, consultants, contractors and others who desire to conduct business with Hidalgo County are encouraged to refer to Texas Local Government Code Chapter 176 for the details of this law. An offense under Texas Local Government Code Chapter 176 is a Class C Misdemeanor.

Complete Form CIQ must be submitted to the Hidalgo County Clerk's Office located at 100 North. Closner, Edinburg, Texas 78539-Hidalgo County Courthouse.

COMPLETION AND SUBMISSION OF FORM CIQ IS THE SOLE RESPONSIBILITY OF THE PROSPECTIVE PROPOSER. QUESTIONS REGARDING COMPLIANCE SHOULD BE DIRECTED TO YOUR LEGAL COUNSEL.

22) CERTIFICATE OF INTERESTED PARTIES (FORM HB1295)

- **As of January 1, 2016, to comply with Texas Government Code Section §2252.908, and the rules issued by the Texas Ethics Commission found in Title 1, Section 46.1, 46.3 and 46.5 of the Texas Administrative Code, we have updated and revised our RFP packet. In accordance with these requirements, a business must submit a completed Certificate of Interested Parties Form 1295 to the County before the County may enter into a contract with the business entity. In box 3 of Form 1295, you will provide the RFP Project No. (i.e. 2017-149), as shown on the packet. Once completed and filed with the Texas Ethics Commission, Form 1295 must be printed and signed in the presence of a notary and submitted to our office either by facsimile transmission to (956) 292-7612 or via email to heidi.ortiz@co.hidalgo.tx.us. Hidalgo County cannot enter into a contract until Form 1295 is submitted. Therefore, failure to timely submit Form 1295 signed and notarized may result in a delay of the award. Full instructions for completion and submittal of Form 1295 may be found on the Texas Ethics Commission website:**

https://www.ethics.state.tx.us/tec/1295-Info.htm

THE AWARDED VENDOR WILL HAVE THIRTY (30) DAYS TO SUBMIT THE SIGNED NOTARIZED FORM 1295. *HIDALGO COUNTY CANNOT ENTER INTO A CONTRACT UNTIL FORM 1295 IS SUBMITTED.*

23) If during the life of any contract or proposal awarded, the successful proposer's net prices generally available to other customers for items awarded herein are reduced below the contracted price, it is understood and agreed that the benefits of such reduction shall be extended to County.

24) Proposals and all goods and services provided thereunder shall comply with all federal, state and local laws concerning this type(s) of goods and/or services.

25) Minimum Standards for Responsible Prospective Proposers: A prospective proposer must affirmatively demonstrate proposer's responsibility. A prospective proposer, by submitting a proposal, represents to County that it meets the following requirements:

- Possess or is able to obtain adequate financial resources as required to perform under the proposal;
- Be able to comply with the required or proposed delivery schedule;
- Have a satisfactory record of performance;
- Have a satisfactory record of integrity and ethics;
- Be otherwise qualified and eligible to receive an award.

26) The successful proposer will pay or cause to be paid, without cost or expenses to County, all FICA, FUTA/SUTA and Federal Income Withholding Taxes of all employees, and all wages and benefits as required by Federal or State law. Successful proposers' officers, agents and/or employees will not be entitled to any benefits of an employee or elected official of County, including, but not limited to, benefits associated with County's civil service system.

27) Any contract award to a successful proposer will be in effect until (a) the contract expires, (b) delivery and acceptance of products, and/or performance of services ordered, or (c) terminated by County with thirty (30) days written notice prior to cancellation.

28) County reserves the right to enforce performance of any contract awarded hereunder in any manner prescribed by law or deemed to be in the best interest of the County. In the event of breach or default by successful proposer; County reserves the right to terminate any contract immediately in the event a successful proposer fails to:

A. Meet schedules;
B. Pay any required fees or taxes; or
C. Otherwise, perform in accordance with the requirements.

29) Successful proposer shall defend, indemnify and save harmless County and all its elected officials, officers, agents and employees from all suits, actions, or other claims of any character, name and description brought for or on account of any injuries or damages received or sustained by any person, persons, or property on account of any negligent act or fault of the successful proposer, or of any agent, employee, subcontractor or supplier in the execution of, or performance under, any contract which may result from proposal award. Successful proposer indemnifies and will indemnify and save harmless County from liability, claim or demand on their part, agents, servants, customers, and/or employees whether such liability, claim or demand arise from event or casualty happening or within the occupied premises themselves or happening upon or in any of the halls, elevators, entrances, stairways or approaches of or to the facilities within which the occupied premises are located. Successful proposer shall pay any judgment with costs which may be obtained against County growing out of such injury or damages, and shall, upon request, provide a defense to County by counsel reasonably acceptable to County. Successful proposer's indemnity hereunder shall include but is not limited to, claims relating to patent, copyright or trademark infringement, and the like, arising out of the goods or services provided by the successful proposer.

30) Successful proposer shall warrant that all items/services shall conform to the specifications and/or all warranties provided under the Uniform Commercial Code and be free from all defects in material, workmanship and the like. Items supplied under a contract pursuant to this Request for Proposals shall be subject to County's approval Items found to be defective or not meeting specifications shall be replaced by successful proposer within two business days at no expense to County. Items not picked up within one (1) week after notification shall be deemed a donation to County and may be used or disposed of at County's discretion and without waiver of any

other rights of County as to the item's nonconformity.

31) This document and any disputes arising hereunder shall be governed and construed according to the laws of the State of Texas and will be performable exclusively in Hidalgo County, Texas.

32) The successful proposer shall not assign, sell, transfer or convey its rights under any awarded contract, in whole or in part, without the prior written consent of County.

33) Proposers shall provide with the proposal response, a list of at least three (3) references where like services have been supplied by their firm. Include the name of the business or government, address, telephone number and name of representative or contact person.

34) Proposers must provide **all** documentation requested with this Proposal in their response. Failure to provide this information may result in rejection of the proposal as non-conforming.

HIDALGO COUNTY
(all funding sources)
RFP NO. 2017-149-06-21-HGO
"Online Pharmacy Billing Services"

To: Martha L. Salazar, CPPB, Purchasing Agent
Hidalgo County Purchasing Department
Physical Address: 2802 S. Business Hwy. 281
Mailing/US Postal Address: 2812 S. Business Hwy. 281
Edinburg, Texas 78539

In accordance with the Requirements, and subject to all laws and regulations of the United States and state and local laws, the undersigned proposer proposes and commits to furnish all labor, equipment, material, software and services as set forth in the documents hereinbefore mentioned. The undersigned proposer further agrees, upon acceptance of its proposal, to execute a contract and/or Purchase Order issued by Hidalgo County for performing and completing the work described in the Requirements within the time stated and for the prices proposed in the documents attached hereto and made a part hereof.

Proposer acknowledges receipt of all of the pages of the documents referenced in the Request for Proposal Checklist presented in connection with this procurement. Proposer understands that Hidalgo County reserves the right to reject any or all proposals and further reserves the right to design the evaluation criteria to be used in selecting the lowest and best proposal.

Proposer agrees that this proposal shall be good and may not be withdrawn for a period of ninety (90) calendar days after the scheduled closing time for receiving proposals, as contained in the Requirements.

Respectfully submitted,

FIRM: _____

ADDRESS: _____

BY: _____

PRINT NAME: _____

TITLE: _____

EXHIBIT A
REQUIREMENTS

HIDALGO COUNTY
REQUEST FOR PROPOSALS

"ONLINE PHARMACY BILLING SERVICES"
RFP NO: 2017-149-06-21-HGO

The County of Hidalgo is seeking to enter into an "Online Pharmacy Billing Services" contract(s) with a state-registered (Texas) Pharmacist. The Hidalgo County Purchasing Department will receive sealed envelopes containing statements of qualifications for the provision of **"Hidalgo County Online Pharmacy Billing Services for Health and Human Services Department"** as specified herein. Statements of Qualifications will be accepted until **9:30 A.M., Wednesday, June 21, 2017. ANY RFP RECEIVED AFTER THAT DATE AND TIME WILL NOT BE ACCEPTED AND WILL BE RETURNED UNOPENED.**

Deliver Submittal to:

RFP NO: 2017-149-06-21-HGO

US Postal Mail Address:
Martha L. Salazar, CPPB, Purchasing Agent
Hidalgo County Purchasing Department
New Administration Building
2812 So. Business Hwy 281
Edinburg, Texas 78539

Physical Address:
Martha L. Salazar, CPPB, Purchasing Agent
Hidalgo County Purchasing Department
New Administration Building
2802 So. Business Hwy 281
Edinburg, Texas 78539

The Submittal Envelope Must Show the RFP Number, Name and Acceptance Date.

The following outlines the Request for Proposals:

SECTION I GENERAL TERMS AND CONDITIONS

ADDITIONAL INFORMATION: Hidalgo County is requesting that statements of qualifications be routed to Martha L. Salazar, CPPB, Purchasing Agent, with a **Physical location of** 2802 So. Business Hwy 281, **(Southeast Corner of Canton & Business Highway 281)** Hidalgo County Administration Building, Edinburg, Texas, 78539.

WRITTEN QUESTIONS WILL BE ACCEPTED VIA FACSIMILE at (956) 292-7612 OR BY EMAIL TO Heidi.ortiz@co.hidalgo.tx.us NO LATER THAN Wednesday, June 14, 2017, *at 5:00 P.M.* Responses will be sent to all applicants via facsimile or email by **Friday, June 16, 2017. TELEPHONE INQUIRIES WILL NOT BE ACCEPTED.**

PROPOSER'S AFFIDAVIT:
Prior to the award of Contract, respondents to this RFP must submit a signed Proposer's Affidavit (attached herein in **Exhibit E**) certifying that the submission is (1) not the result of Collusion as described in the Proposer's Affidavit, (2) that the Respondent does not have a Conflict of Interest as described in the Proposer's, affidavit or that the Respondent has not and will not attempt to lobby directly or indirectly as described in the Proposer's Affidavit.

NON-COLLUSION:
Submitters, by submitting a signed submission, certify that the accompanying submission is not the result of, or affected by, any unlawful act of collusion with any other person or company engaged in the same line of business or commerce, or any other fraudulent act punishable under Texas or United States law.

NON-DISCRIMINATION:
Submitters, during the performance of this contract, will not discriminate against any employee or applicant for employment because of race, religion, sex, national origin or disability except where religion, sex, national origin or disability is a bona fide occupational qualification reasonably necessary to the normal operation of the contractor.

PROCESSING TIME FOR PAYMENT:
Submitters are advised that a minimum of thirty (30) days is required to process invoices for payment.

ELECTRONIC TRANSMISSION OF BIDS:
Hidalgo County's Purchasing Department will not accept telegraphic or electronically transmitted submissions.

PROOF OF FINANCIAL AND BUSINESS CAPABILITY:
Submitters must, upon request, furnish satisfactory evidence of their ability to furnish products or services in accordance with the terms and conditions of these requirements. Hidalgo County will make the final determination as to the submitter's ability.

SUBMITTER DEFAULT:
Hidalgo County reserves the right, in the case of submitter default, to procure the articles or services from other sources and hold the defaulting submitter responsible for any excess costs occasioned thereby.

RESTRICTIVE OR AMBIGUOUS REQUIREMENTS:
It is the responsibility of the submitter to review the Request for Proposals (RFP) packet and to notify the Purchasing Department if the requirements are formulated in a manner that would unnecessarily restrict competition. Any such protest or question regarding the requirements or bidding procedures must be received in the Purchasing Department not less than seventy-two hours prior to the time set for the opening. These criteria also apply to requirements that are ambiguous.

RFP DELIVERY: Hidalgo County requires submitters, when hand delivering proposals, to make sure that proposal is stamped with the date and time by the County Purchasing Department staff.

SIGNING OF RFP:
In order to be considered all submittals **must** be signed. **Please sign the original in blue ink.**

WAIVING OF INFORMALITIES:
Hidalgo County reserves the right to waive minor informalities or technicalities when it is in the best interest of Hidalgo County.

SUBCONTRACTING:
The successful submitter may not subcontract the award without the written consent of the Commissioners' Court of Hidalgo County.

TERM OF CONTRACT:
It is intended that the term of the contract will be for an initial period of one (1) year, commencing on September 1, 2017, and expiring on August 31, 2018, with the County's option to renew for an additional one (1) year term under the same rates, terms, and conditions.

Hidalgo County reserves the right to continue this agreement for an additional sixty (60) day grace period at the end of the agreement terms for the unforeseen delay in award of the new request for proposals.

All costs and expenses associated with the preparation and submission of (bids, proposal and/or quotes) shall be the responsibility of the participant and no reimbursement for such charges or expenses shall be passed onto Hidalgo County.

DAVIS BACON ACT: (IF APPLICABLE)
All selected and awarded firms are required to include the Davis-Bacon Act when advertising and developing specifications.

SECTION II RFP REQUIREMENTS

Request For Proposal:
The required contents and limitations for the preparation of the RFP are described in this section. Failure to provide the requested information or adhere to any County limitations will result in disqualification of the submitted RFP. A total of **one (1) original and seven (7) copies** of the RFP and **one (1)** CD in PDF format shall be submitted to the address on the cover letter.

Contents:
The required contents for the RFP are presented below in the order they should be incorporated into the submitted document.

Understanding of the Project:
This section should demonstrate the submitter's understanding of the project needs, the work required, and any local issues or concerns. This description should be concise, candid, and limited to 3 pages in length.

PROJECT OVERVIEW:
The County of Hidalgo is seeking to engage a competent Online Pharmacy Billing Service Company to provide services for the Hidalgo County Health and Human Services Department. The company will provide services for qualified clients of the County Indigent Health Care Level 2 Pilot Program.

SCOPE OF SERVICES:
Hidalgo County is requesting sealed statements of qualifications from an experienced Online Pharmacy Billing Services Company required for the "Online Pharmacy Billing Services" for Hidalgo County Health and Human Services Department. The contract will encompass all services to the County of Hidalgo including, but not limited to, the following:

a. Provide system for pharmacies within the network to bill claims online;

b. Provide a discount for all prescriptions billed online of at least AWP less 40% of net cost for generic and 13% brand drug as starting point;

c. Provide the ability to limit members to three prescriptions per month;

d. Provide the ability to limit members to a certain amount per drug per month;

e. Provide real-time online eligibility management;

f. Provide ability to maintain and develop a network of pharmacies;

g. Provide bi-weekly, monthly and quarterly reports summarizing drug expenditures;

h. Provide Customer Service Help Desk to service the County of Hidalgo members and providers;

i. Provide ability to load electronic eligibility files within 24 hours of receipt;

j. Provide ability to maintain and provide a cost-effective drug formulary;

k. Contractor is to impose a generic only program with an override feature for any name brand drug;

l. Provide the same pricing to members who exceed the three prescriptions per month as the County would receive;

m. Provide County with all rebates issued by pharmaceutical companies for any medications;

n. Provide electronic billing to interface with software provider for County of Hidalgo Health and Human Services;

o. Provide ability to run real-time online reports;

p. Provide actual numbers of covered lives for any date range requested on reports;

q. Provide a yearly summary report reflecting drug utilization and identify potential cost savings to the County.

PARTICIPANTS ARE NOT TO PROVIDE A FEE SCHEDULE AT THIS TIME WITH THIS SUBMITTAL: The fee will be negotiated based on the scope of work.

PART III-SELECTION AND SCHEDULES

SELECTION PROCEDURES/EVALUATION SYSTEM:
The evaluation consists of a 100-point scoring system. However, after the 100-point evaluation, Hidalgo County Commissioner's Court may elect to narrow the participating firms and request a presentation from a representative from firms.

A. Hidalgo County Commissioner's Court and/or an Evaluation Committee (selected and/or designated by Commissioner's Court) will review, score and evaluate the proposals received in response to this Hidalgo County request for proposals.

B. After the RFP's have been reviewed, scored and evaluated, a grid will be presented to Commissioner's Court for the purposes of ranking.

Categories are further detailed in the Selection Criteria (Exhibit B) section of the RFP.

NEGOTIATION PROCESS: The number one ranked firm will be contacted to submit a letter of engagement/contract for negotiations. If negotiations prove unsuccessful, Commissioner's Court will terminate negotiations with the firm and will contact the next highest ranked firm to open negotiations. The County of Hidalgo reserves the right to reject any and all RFP's.

TERMINATION OF SERVICES: Any contract awarded to a qualified firm will be in effect until (a) the contract expires or (b) performance of all services are completed, or (c) terminated by County with or without cause, with ninety (90) days written notice prior to cancellation, or (d) until County has engaged the services of a new Online Pharmacy Billing Service for Hidalgo County Health and Human Services Department.

EXHIBIT B

SELECTION CRITERIA

Hidalgo County
"ONLINE PHARMACY BILLING SERVICES"

RFP NO: 2017-149-06-21-HGO

"ONLINE PHARMACY BILLING SERVICES"
SELECTION CRITERIA
RFP: 2017-149-06-21-HGO

Selection Criteria		Points	Score
1. Company's Qualifications	**(25 pts)**		
➢ Provide network of pharmacies			
➢ Experience in pharmacy billing services			
➢ Experience and stability of company			
➢ References are required			
Comments/Rationale For Points:			TOTAL _____
2. Billing Procedures	**(25 pts)**		
➢ Provide electronic billing to County			
➢ Procedure real-time online eligibility management			
➢ Respond to billing questions			
Comments/Rationale For Points:			TOTAL _____
3. Rebate Administration	**(25 pts)**		
➢ Provide pharmaceutical rebates to County for eligible prescription drugs			
➢ Provides detail rebate reports			
➢ Provide rebates timely			
Comments/Rationale For Points:			TOTAL _____
4. Management Reports	**(25 pts)**		
➢ Electronic Reports provided to the County			
➢ Flexibility in meeting the County's reporting needs			
➢ Responses to Auditor inquiries and confirmation requests			
➢ Electronic invoicing to County			
Comments/Rationale For Points:			TOTAL _____
		Total Score	

Project Name: _____

Department: _____

Firm/Participant: _____

Evaluator: _____ Date: _____

EXHIBIT "C"

Insurance Requirements
Professional Services
(i.e...Engineers, Architects, Appraisers & Surveyors)

The proposer awarded the contract shall furnish proof of insurance, which will also include any subcontractor that is subcontracted by the proposer in at least the following limits, to be in place prior to providing any services under this Contract and to continue at all times in force in effect during the term of this Contract:

1. Professional liability insurance policy with limits of at least One Million Dollars ($1,000,000) per occurrence, or limited to claims made, include at least a five (5) year extended reporting period.

2. A Five Hundred Thousand Dollars ($500,000.00) Comprehensive General Liability insurance policy providing additional coverage to all underlying liabilities of County.

3. Automobile liability insurance policy with limits of at least Three Hundred Thousand Dollars ($300,000.00) per person and Five Hundred Thousand Dollars ($500,000.00) per occurrence. Coverage should include injury to or death of persons and property damage claims with limits up to Five Hundred Thousand Dollars ($500,000.00) arising out of the services provided to County hereunder.

4. Uninsured/Underinsured motorist coverage in an amount equal to the bodily injury limits set forth immediately above;

5. Workers compensation insurance in amounts established by Texas law, unless the Bidder is specifically exempted from the Texas Workers Compensation Act, Texas Labor Code Chapter 401, et. seq.

Hidalgo County will only accept certificates of insurance on an Acord form (as attached hereto). Certificates of insurance naming County as an additional insured shall be submitted to County for approval prior to any services being performed by Contractor. Each policy of insurance required hereunder shall extend for a period equivalent to, or longer than the term of the Contract, and any insurer hereunder shall be required to give at least thirty (30) days written notice to the County prior to the cancellation of any such coverage on the termination date, or otherwise. This Contract shall be automatically suspended upon the cancellation, or other termination, of any required policy of insurance hereunder, and such suspension shall continue until evidence adequate replacement coverage is provided to County. If replacement coverage is not provided within thirty (30) days following suspension of the Contract, this Contract shall automatically terminate.

ACORD

CERTIFICATE OF INSURANCE

DATE (MM/DD/YY)

PRODUCER	THIS CERTIFICATE IS ISSUED AS A MATTER OF INFORMATION ONLY AND CONFERS NO RIGHTS UPON THE CERTIFICATE HOLDER. THIS CERTIFICATE DOES NOT AMEND, EXTEND OR ALTER THE COVERAGE AFFORDED BY THE POLICIES BELOW.
	INSURERS AFFORDING COVERAGE
INSURED	INSURER A:
	INSURER B:
	INSURER C:
	INSURER D:
	INSURER E:

COVERAGES

THE POLICIES OF INSURANCE LISTED BELOW HAVE BEEN ISSUED TO THE INSURED NAMED ABOVE FOR THE POLICY PERIOD INDICATED. NOTWITHSTANDING ANY REQUIREMENT, TERM OR CONDITION OF ANY CONTRACT OR OTHER DOCUMENT WITH RESPECT TO WHICH THIS CERTIFICATE MAY BE ISSUED OR MAY PERTAIN, THE INSURANCE AFFORDED BY THE POLICIES DESCRIBED HEREIN IS SUBJECT TO ALL THER TERMS, EXCLUSIONS AND CONDITIONS OF SUCH POLICIES. AGGREGATE LIMITS SHOWN MAY HAVE BEEN REDUCED BY PAID CLAIMS.

INSR LTR	TYPE OF INSURANCE	POLICY NUMBER	POLICY EFFECTIVE DATE (MM/DD/YY)	POLICY EXPIRATION DATE	LIMITS	
A	**GENERAL LIABILITY** ☐ COMMERCIAL GENERAL LIABILITY ☐☐ CLAIMS MADE OCCUR ☐ OWNER'S & CONT. PROT ☐ OWNER'S PROTECTIVE LIABILITY GEN'L AGGREGATE LIMIT APPLIES PER: ☐ POLICY PROJECT ☐ LOC				EACH OCCURRENCE	$
					FIRE DAMAGE (Any one fire)	$
					MED (Any one person)	$
					PERS & ADV INJURY	$
					AL AGGREGATE	$
					ODUCTS – COMP/OP AGG	$
B	**AUTOMOBILE LIABILITY** ☐ ANY AUTO ☐ ALL OWNED AUTOS ☐ SCHEDULED AUTOS ☐ HIRED AUTOS ☐ NON-OWNED AUTOS				COMBINED SINGLE LIMIT (Ea accident)	$
					BODILY INJURY (Per person)	$
					BODILY INJURY (Per accident)	$
					PROPERTY DAMAGE (Per accident)	$
	GARAGE LIABILITY ☐ ANY AUTO				AUTO ONLY-EA ACCIDENT	$
					OTHER THAN AUTO ONLY EA ACC	$
					AGG	$
C	**EXCESS LIABILITY** ☐ OCCUR ☐ CLAIMS MADE ☐ DEDUCTIBLE ☐ RETENTION $				EACH OCCURENCE	$
					AGGREGATE	$
						$
						$
						$
D	**WORKERS COMPENSATION AND EMPLOYER'S LIABILITY**				WC STATU-TORY LIMITS ☐ OTHER	
					E.L. EACH ACCIDENT	$
					E.L. DISEASE-EA EMPLOYEE	$
					E.L. DISEASE-POLICY LIMIT	$
	OTHER					

DESCRIPTION OF OPERATIONS / LOCATION / VEHICLES / EXCLUSIONS ADDED BY ENDORSEMENT / SPECIAL PROVISIONS

County of Hidalgo shall be named as additional insured on all Commercial General Liability policies.

CERTIFICATE HOLDER	ADDITIONAL INSURED; INSURER LETTER: _____ CANCELLATION
Hidalgo County **Attn: Purchasing Department** **2812 S Highway Bus. 281** **Edinburg, Texas 78539**	SHOULD ANY OF THE ABOVE DESCRIBED POLICIES BY CANCELLED BEFORE THE EXPIRATION DATE THEREOF, THE ISSUING INSURER WILL ENDEAVOR TO MAIL ***30*** DAYS WRITTEN NOTICE TO THE CERTIFICATE HOLDER NAMED TO THE LEFT, BUT FAILURE TO DO SO SHALL IMPOSE NO OBLIGATION OR LIABILITY OF ANY KIND UPON THE INSURER, ITS AGENTS OR REPRESENTATIVES. AUTHORIZED REPRESENTATIVE

SAMPLE

Insurance Requirement Acknowledgment

I, _____, authorized representative for _____,
Company/Vendor

hereby acknowledge receipt of the County's required insurance limits. Said requirements:

☐ will be acquired within 10 working days after notification from Purchasing Department of award of project by the Hidalgo County Commissioners= Court;

☐ will acquire additional amounts required to meet the County's requirements within 10 working days after notification from Purchasing Department of award of project by the Hidalgo County Commissioners= Court; currently carry the following

Professional Liability (Errors & Omissions): $_____

Automobile Liability: $_____ General Liability: $_____

☐ have already been met, see attached copy of insurance certificate.

_____ _____
Authorized Representative Date

Notice to Proposer:

A certificate of insurance for the required insurance limits shall be provided to the Purchasing Department's Contract Managers in order to qualify for award and to execute a contract between your Company and the County

Failure to provide Certificates of Insurance to the Purchasing Department's Contract Managers will cause the award to be rescinded and re-awarded to next qualified vendor. Certificates of Insurance will be monitored and verified on a **quarterly basis** to ensure coverage policy is in place. It is the Company=s obligation to maintain the appropriate insurance coverage throughout the term of the contract.

THIS FORM MUST ACCOMPANY YOUR PACKET

PROJECT REQUIREMENTS ACKNOWLEDGMENT

This is to certify that I, _____, possess all of the **APPLICABLE**:

1. Licenses: _____
2. Bonds: _____
3. Certificates: _____
4. Permits: _____
5. Other: _____

necessary to carry out the required project. Furthermore, I am providing copies of the required documentation so that, if my company is awarded this project, I may be eligible to enter into a contract with Hidalgo County and proceed to complete the project in a timely manner.

*** Any licenses, bonds, certificates, permits, etc. which are required <u>must be presented</u> as part of the packet in order to expedite the evaluation process. Failure to provide said documentation will result in the disqualification of your proposal/qualification.**

_____ _____

Authorized Signature Date

_____

Company

_____

Address

_____

City, State, Zip

Exhibit "D"

CIQ

CONFLICT OF INTEREST QUESTIONNAIRE

FORM CIQ

For vendor doing business with local governmental entity

This questionnaire reflects changes made to the law by H.B. 23, 84th Leg., Regular Session.

This questionnaire is being filed in accordance with Chapter 176, Local Government Code, by a vendor who has a business relationship as defined by Section 176.001(1-a) with a local governmental entity and the vendor meets requirements under Section 176.006(a).

By law this questionnaire must be filed with the records administrator of the local governmental entity not later than the 7th business day after the date the vendor becomes aware of facts that require the statement to be filed. *See* Section 176.006(a-1), Local Government Code.

A vendor commits an offense if the vendor knowingly violates Section 176.006, Local Government Code. An offense under this section is a misdemeanor.

OFFICE USE ONLY
Date Received

1 **Name of vendor who has a business relationship with local governmental entity.**

2 ☐ **Check this box if you are filing an update to a previously filed questionnaire.** (The law requires that you file an updated completed questionnaire with the appropriate filing authority not later than the 7th business day after the date on which you became aware that the originally filed questionnaire was incomplete or inaccurate.)

3 **Name of local government officer about whom the information is being disclosed.**

_____
Name of Officer

4 **Describe each employment or other business relationship with the local government officer, or a family member of the officer, as described by Section 176.003(a)(2)(A). Also describe any family relationship with the local government officer. Complete subparts A and B for each employment or business relationship described. Attach additional pages to this Form CIQ as necessary.**

A. Is the local government officer or a family member of the officer receiving or likely to receive taxable income, other than investment income, from the vendor?

☐ Yes ☐ No

B. Is the vendor receiving or likely to receive taxable income, other than investment income, from or at the direction of the local government officer or a family member of the officer AND the taxable income is not received from the local governmental entity?

☐ Yes ☐ No

5 **Describe each employment or business relationship that the vendor named in Section 1 maintains with a corporation or other business entity with respect to which the local government officer serves as an officer or director, or holds an ownership interest of one percent or more.**

6 ☐ Check this box if the vendor has given the local government officer or a family member of the officer one or more gifts as described in Section 176.003(a)(2)(B), excluding gifts described in Section 176.003(a-1).

7

_____ _____
Signature of vendor doing business with the governmental entity Date

CONFLICT OF INTEREST QUESTIONNAIRE
For vendor doing business with local governmental entity

A complete copy of Chapter 176 of the Local Government Code may be found at http://www.statutes.legis.state.tx.us/Docs/LG/htm/LG.176.htm. For easy reference, below are some of the sections cited on this form.

Local Government Code § 176.001(1-a): "Business relationship" means a connection between two or more parties based on commercial activity of one of the parties. The term does not include a connection based on:

(A) a transaction that is subject to rate or fee regulation by a federal, state, or local governmental entity or an agency of a federal, state, or local governmental entity;

(B) a transaction conducted at a price and subject to terms available to the public; or

(C) a purchase or lease of goods or services from a person that is chartered by a state or federal agency and that is subject to regular examination by, and reporting to, that agency.

Local Government Code § 176.003(a)(2)(A) and (B):

(a) A local government officer shall file a conflicts disclosure statement with respect to a vendor if:

***

(2) the vendor:

(A) has an employment or other business relationship with the local government officer or a family member of the officer that results in the officer or family member receiving taxable income, other than investment income, that exceeds $2,500 during the 12-month period preceding the date that the officer becomes aware that

(i) a contract between the local governmental entity and vendor has been executed; or

(ii) the local governmental entity is considering entering into a contract with the vendor;

(B) has given to the local government officer or a family member of the officer one or more gifts that have an aggregate value of more than $100 in the 12-month period preceding the date the officer becomes aware that:

(i) a contract between the local governmental entity and vendor has been executed; or

(ii) the local governmental entity is considering entering into a contract with the vendor.

Local Government Code § 176.006(a) and (a-1)

(a) A vendor shall file a completed conflict of interest questionnaire if the vendor has a business relationship with a local governmental entity and:

(1) has an employment or other business relationship with a local government officer of that local governmental entity, or a family member of the officer, described by Section 176.003(a)(2)(A);

(2) has given a local government officer of that local governmental entity, or a family member of the officer, one or more gifts with the aggregate value specified by Section 176.003(a)(2)(B), excluding any gift described by Section 176.003(a-1); or

(3) has a family relationship with a local government officer of that local governmental entity.

(a-1) The completed conflict of interest questionnaire must be filed with the appropriate records administrator not later than the seventh business day after the later of:

(1) the date that the vendor:

(A) begins discussions or negotiations to enter into a contract with the local governmental entity; or

(B) submits to the local governmental entity an application, response to a request for proposals or bids, correspondence, or another writing related to a potential contract with the local governmental entity; or

(2) the date the vendor becomes aware:

(A) of an employment or other business relationship with a local government officer, or a family member of the officer, described by Subsection (a);

(B) that the vendor has given one or more gifts described by Subsection (a); or

(C) of a family relationship with a local government officer.

EXHIBIT "E"

Vendor Application
&
W9

HIDALGO COUNTY
PURCHASING DEPARTMENT
Bidder/Vendor Application

Complete in print or type. Please return this application to the Hidalgo County Purchasing Department thru Facsimile: (956) 318-2629 or (956) 292-7612 in person or regular mail to: 2812 S. Business Hwy. 281 , Edinburg, Texas 78539 or email: purchasing@co.hidalgo.tx.us

Company Name: **Telephone No. ( )**

dba Name:

Legal Name:

Mailing Address : **Fax No. ( )**

Physical Address:

City, State, Zip **Tax I.D. No.**

Remit to Address : **City, State, Zip**

E-Mail Address:

Representative(s) Name(s) & Title(s)

Type of Organization (check one): _____ **Individual** _____ **Partnership** _____ **Corporation** _____**Non-Profit** _____ **LLC** _____ **Sole Proprietor** _____ **Other, Specify**

State Identification No._____ **(Please attached completed W-9 form with this application)**

Federal Identification No. or (if individual) SS No.

State of Incorporation: _____ **Date:**_____ **Other:**

Type of Business (check one): _____ **Manufacturer** _____ **Wholesaler** _____ **Retailer** _____ **Broker** _____ **Distributor** _____ **Service Organization** _____ **Other, Specify**

Name & Title of Person(s) Authorized to Sign Bids, Proposals, and/or Contracts:

Small and/or Disadvantaged Business Information (check application criteria)

Small Business: **Disadvantaged Business (At Least 51% Ownership)**

☐ Less than 125,000 annual gross receipt
☐ Less than 250,000 annual gross receipt
☐ Less than 499,000 annual gross receipt
☐ More than 500,000 annual gross receipt

☐ Black American
☐ Hispanic American
☐ Asian Pacific American

☐ Native American
☐ Women
☐ Other

Have you been certified as a HUB or an MBE/WBE source?: ☐ Yes ☐ No

Indicate Certification No.(s):_____ **or are Certificate(s) attached?:** ☐ Yes ☐ No

What type of product(s) is/are solicited by your company?:

Would you like to be provided with specifications for procurements of such products?: ☐ Yes ☐ No

To Be Completed by the County: Rec'd by (Purchasing):_____ **Date Rec'd by (Purchasing):**

Date Forwarded Information to Auditor's Office:_____**Entry Date:** _____ **Vendor No.:**

HISTORICALLY UNDERUTILIZED BUSINESS (HUB) DECLARATION

The primary objective of the Hidalgo County HUB Program is to ensure Historically Underutilized Businesses receive a fair and equal opportunity for participation in the County's procurement process. This fact holds true for Services (Professional & Non-Professional), Commodities, and Construction contracts and any subcontracts thereto. The program strongly encourages Prime Contractors to provide subcontracting opportunities to Certified Hub Contractors/Vendors. Our goal for HUB contractor/vendor participation, as well as HUB subcontractor participation is 30%. To be considered as a "Certified HUB Contractor/Vendor" the contractor/vendor must have been certified by, and hold a current and valid certification with any of the three agencies listed below.

Have you been Certified as a HUB or an MBE/WBE source?: ☐Yes ☐ No

If yes, by whom?: ☐ Texas Building & Procurement Commission ☐ Other_____

Indicate Certification No(s).:_____ or Are Certificate(s) Attached?: ☐ Yes ☐ No

---

LIST OF CERTIFIED HUB SUBCONTRACTORS

(Attach additional pages if necessary)

What percentage of the Bid, RFP,or RFQ is to be subcontracted with Certified HUB sources?: _____%
(List HUB Subcontractor information below).

HUB Subcontractor Name: _____ HUB Status:
Certifying Agency (Check all applicable): ☐Texas Building & Procurement Commission ☐ Other
Address: _____ City: _____ State: _____ Zip:
Contact Person: _____ Title: _____ Phone No.: ( )
Subcontract Amount: $_____ Description of Work to be Performed:

HUB Subcontractor Name: _____ HUB Status:
Certifying Agency (Check all applicable): ☐Texas Building & Procurement Commission ☐ Other
Address: _____ City: _____ State: _____ Zip:
Contact Person: _____ Title: _____ Phone No.: ( )
Subcontract Amount: $_____ Description of Work to be Performed:

HUB Subcontractor Name: _____ HUB Status:
Certifying Agency (Check all applicable): ☐Texas Building & Procurement Commission ☐ Other
Address: _____ City: _____ State: _____ Zip:
Contact Person: _____ Title: _____ Phone No.: ( )
Subcontract Amount: $_____ Description of Work to be Performed:

Form **W-9**
(Rev. December 2014)
Department of the Treasury
Internal Revenue Service

Request for Taxpayer Identification Number and Certification

Give Form to the requester. Do not send to the IRS.

Print or type
See Specific Instructions on page 2.

1 Name (as shown on your income tax return). Name is required on this line; do not leave this line blank.

2 Business name/disregarded entity name, if different from above

3 Check appropriate box for federal tax classification; check only **one** of the following seven boxes:

☐ Individual/sole proprietor or single-member LLC ☐ C Corporation ☐ S Corporation ☐ Partnership ☐ Trust/estate

☐ Limited liability company. Enter the tax classification (C=C corporation, S=S corporation, P=partnership) ▶ _____

Note. For a single-member LLC that is disregarded, do not check LLC; check the appropriate box in the line above for the tax classification of the single-member owner.

☐ Other (see instructions) ▶

4 Exemptions (codes apply only to certain entities, not individuals; see instructions on page 3):

Exempt payee code (if any) _____

Exemption from FATCA reporting code (if any) _____

(Applies to accounts maintained outside the U.S.)

5 Address (number, street, and apt. or suite no.)

Requester's name and address (optional)

6 City, state, and ZIP code

7 List account number(s) here (optional)

Part I Taxpayer Identification Number (TIN)

Enter your TIN in the appropriate box. The TIN provided must match the name given on line 1 to avoid backup withholding. For individuals, this is generally your social security number (SSN). However, for a resident alien, sole proprietor, or disregarded entity, see the Part I instructions on page 3. For other entities, it is your employer identification number (EIN). If you do not have a number, see *How to get a TIN* on page 3.

Note. If the account is in more than one name, see the instructions for line 1 and the chart on page 4 for guidelines on whose number to enter.

Social security number

			–		–				

or

Employer identification number

		–							

Part II Certification

Under penalties of perjury, I certify that:

1. The number shown on this form is my correct taxpayer identification number (or I am waiting for a number to be issued to me); and
2. I am not subject to backup withholding because: (a) I am exempt from backup withholding, or (b) I have not been notified by the Internal Revenue Service (IRS) that I am subject to backup withholding as a result of a failure to report all interest or dividends, or (c) the IRS has notified me that I am no longer subject to backup withholding; and
3. I am a U.S. citizen or other U.S. person (defined below); and
4. The FATCA code(s) entered on this form (if any) indicating that I am exempt from FATCA reporting is correct.

Certification instructions. You must cross out item 2 above if you have been notified by the IRS that you are currently subject to backup withholding because you have failed to report all interest and dividends on your tax return. For real estate transactions, item 2 does not apply. For mortgage interest paid, acquisition or abandonment of secured property, cancellation of debt, contributions to an individual retirement arrangement (IRA), and generally, payments other than interest and dividends, you are not required to sign the certification, but you must provide your correct TIN. See the instructions on page 3.

Sign Here | **Signature of U.S. person** ▶ | **Date** ▶

General Instructions

Section references are to the Internal Revenue Code unless otherwise noted.

Future developments. Information about developments affecting Form W-9 (such as legislation enacted after we release it) is at *www.irs.gov/fw9*.

Purpose of Form

An individual or entity (Form W-9 requester) who is required to file an information return with the IRS must obtain your correct taxpayer identification number (TIN) which may be your social security number (SSN), individual taxpayer identification number (ITIN), adoption taxpayer identification number (ATIN), or employer identification number (EIN), to report on an information return the amount paid to you, or other amount reportable on an information return. Examples of information returns include, but are not limited to, the following:

- Form 1099-INT (interest earned or paid)
- Form 1099-DIV (dividends, including those from stocks or mutual funds)
- Form 1099-MISC (various types of income, prizes, awards, or gross proceeds)
- Form 1099-B (stock or mutual fund sales and certain other transactions by brokers)
- Form 1099-S (proceeds from real estate transactions)
- Form 1099-K (merchant card and third party network transactions)
- Form 1098 (home mortgage interest), 1098-E (student loan interest), 1098-T (tuition)
- Form 1099-C (canceled debt)
- Form 1099-A (acquisition or abandonment of secured property)

Use Form W-9 only if you are a U.S. person (including a resident alien), to provide your correct TIN.

If you do not return Form W-9 to the requester with a TIN, you might be subject to backup withholding. See *What is backup withholding?* on page 2.

By signing the filled-out form, you:

1. Certify that the TIN you are giving is correct (or you are waiting for a number to be issued),
2. Certify that you are not subject to backup withholding, or
3. Claim exemption from backup withholding if you are a U.S. exempt payee. If applicable, you are also certifying that as a U.S. person, your allocable share of any partnership income from a U.S. trade or business is not subject to the withholding tax on foreign partners' share of effectively connected income, and
4. Certify that FATCA code(s) entered on this form (if any) indicating that you are exempt from the FATCA reporting, is correct. See *What is FATCA reporting?* on page 2 for further information.

Note. If you are a U.S. person and a requester gives you a form other than Form W-9 to request your TIN, you must use the requester's form if it is substantially similar to this Form W-9.

Definition of a U.S. person. For federal tax purposes, you are considered a U.S. person if you are:

- An individual who is a U.S. citizen or U.S. resident alien;
- A partnership, corporation, company, or association created or organized in the United States or under the laws of the United States;
- An estate (other than a foreign estate); or
- A domestic trust (as defined in Regulations section 301.7701-7).

Special rules for partnerships. Partnerships that conduct a trade or business in the United States are generally required to pay a withholding tax under section 1446 on any foreign partners' share of effectively connected taxable income from such business. Further, in certain cases where a Form W-9 has not been received, the rules under section 1446 require a partnership to presume that a partner is a foreign person, and pay the section 1446 withholding tax. Therefore, if you are a U.S. person that is a partner in a partnership conducting a trade or business in the United States, provide Form W-9 to the partnership to establish your U.S. status and avoid section 1446 withholding on your share of partnership income.

In the cases below, the following person must give Form W-9 to the partnership for purposes of establishing its U.S. status and avoiding withholding on its allocable share of net income from the partnership conducting a trade or business in the United States:

- In the case of a disregarded entity with a U.S. owner, the U.S. owner of the disregarded entity and not the entity;
- In the case of a grantor trust with a U.S. grantor or other U.S. owner, generally, the U.S. grantor or other U.S. owner of the grantor trust and not the trust; and
- In the case of a U.S. trust (other than a grantor trust), the U.S. trust (other than a grantor trust) and not the beneficiaries of the trust.

Foreign person. If you are a foreign person or the U.S. branch of a foreign bank that has elected to be treated as a U.S. person, do not use Form W-9. Instead, use the appropriate Form W-8 or Form 8233 (see Publication 515, Withholding of Tax on Nonresident Aliens and Foreign Entities).

Nonresident alien who becomes a resident alien. Generally, only a nonresident alien individual may use the terms of a tax treaty to reduce or eliminate U.S. tax on certain types of income. However, most tax treaties contain a provision known as a "saving clause." Exceptions specified in the saving clause may permit an exemption from tax to continue for certain types of income even after the payee has otherwise become a U.S. resident alien for tax purposes.

If you are a U.S. resident alien who is relying on an exception contained in the saving clause of a tax treaty to claim an exemption from U.S. tax on certain types of income, you must attach a statement to Form W-9 that specifies the following five items:

1. The treaty country. Generally, this must be the same treaty under which you claimed exemption from tax as a nonresident alien.
2. The treaty article addressing the income.
3. The article number (or location) in the tax treaty that contains the saving clause and its exceptions.
4. The type and amount of income that qualifies for the exemption from tax.
5. Sufficient facts to justify the exemption from tax under the terms of the treaty article.

Example. Article 20 of the U.S.-China income tax treaty allows an exemption from tax for scholarship income received by a Chinese student temporarily present in the United States. Under U.S. law, this student will become a resident alien for tax purposes if his or her stay in the United States exceeds 5 calendar years. However, paragraph 2 of the first Protocol to the U.S.-China treaty (dated April 30, 1984) allows the provisions of Article 20 to continue to apply even after the Chinese student becomes a resident alien of the United States. A Chinese student who qualifies for this exception (under paragraph 2 of the first protocol) and is relying on this exception to claim an exemption from tax on his or her scholarship or fellowship income would attach to Form W-9 a statement that includes the information described above to support that exemption.

If you are a nonresident alien or a foreign entity, give the requester the appropriate completed Form W-8 or Form 8233.

Backup Withholding

What is backup withholding? Persons making certain payments to you must under certain conditions withhold and pay to the IRS 28% of such payments. This is called "backup withholding." Payments that may be subject to backup withholding include interest, tax-exempt interest, dividends, broker and barter exchange transactions, rents, royalties, nonemployee pay, payments made in settlement of payment card and third party network transactions, and certain payments from fishing boat operators. Real estate transactions are not subject to backup withholding.

You will not be subject to backup withholding on payments you receive if you give the requester your correct TIN, make the proper certifications, and report all your taxable interest and dividends on your tax return.

Payments you receive will be subject to backup withholding if:

1. You do not furnish your TIN to the requester,
2. You do not certify your TIN when required (see the Part II instructions on page 3 for details),
3. The IRS tells the requester that you furnished an incorrect TIN,
4. The IRS tells you that you are subject to backup withholding because you did not report all your interest and dividends on your tax return (for reportable interest and dividends only), or
5. You do not certify to the requester that you are not subject to backup withholding under 4 above (for reportable interest and dividend accounts opened after 1983 only).

Certain payees and payments are exempt from backup withholding. See *Exempt payee code* on page 3 and the separate Instructions for the Requester of Form W-9 for more information.

Also see *Special rules for partnerships* above.

What is FATCA reporting?

The Foreign Account Tax Compliance Act (FATCA) requires a participating foreign financial institution to report all United States account holders that are specified United States persons. Certain payees are exempt from FATCA reporting. See *Exemption from FATCA reporting code* on page 3 and the Instructions for the Requester of Form W-9 for more information.

Updating Your Information

You must provide updated information to any person to whom you claimed to be an exempt payee if you are no longer an exempt payee and anticipate receiving reportable payments in the future from this person. For example, you may need to provide updated information if you are a C corporation that elects to be an S corporation, or if you no longer are tax exempt. In addition, you must furnish a new Form W-9 if the name or TIN changes for the account; for example, if the grantor of a grantor trust dies.

Penalties

Failure to furnish TIN. If you fail to furnish your correct TIN to a requester, you are subject to a penalty of $50 for each such failure unless your failure is due to reasonable cause and not to willful neglect.

Civil penalty for false information with respect to withholding. If you make a false statement with no reasonable basis that results in no backup withholding, you are subject to a $500 penalty.

Criminal penalty for falsifying information. Willfully falsifying certifications or affirmations may subject you to criminal penalties including fines and/or imprisonment.

Misuse of TINs. If the requester discloses or uses TINs in violation of federal law, the requester may be subject to civil and criminal penalties.

Specific Instructions

Line 1

You must enter one of the following on this line; **do not** leave this line blank. The name should match the name on your tax return.

If this Form W-9 is for a joint account, list first, and then circle, the name of the person or entity whose number you entered in Part I of Form W-9.

a. **Individual.** Generally, enter the name shown on your tax return. If you have changed your last name without informing the Social Security Administration (SSA) of the name change, enter your first name, the last name as shown on your social security card, and your new last name.

Note. ITIN applicant: Enter your individual name as it was entered on your Form W-7 application, line 1a. This should also be the same as the name you entered on the Form 1040/1040A/1040EZ you filed with your application.

b. **Sole proprietor or single-member LLC.** Enter your individual name as shown on your 1040/1040A/1040EZ on line 1. You may enter your business, trade, or "doing business as" (DBA) name on line 2.

c. **Partnership, LLC that is not a single-member LLC, C Corporation, or S Corporation.** Enter the entity's name as shown on the entity's tax return on line 1 and any business, trade, or DBA name on line 2.

d. **Other entities.** Enter your name as shown on required U.S. federal tax documents on line 1. This name should match the name shown on the charter or other legal document creating the entity. You may enter any business, trade, or DBA name on line 2.

e. **Disregarded entity.** For U.S. federal tax purposes, an entity that is disregarded as an entity separate from its owner is treated as a "disregarded entity." See Regulations section 301.7701-2(c)(2)(iii). Enter the owner's name on line 1. The name of the entity entered on line 1 should never be a disregarded entity. The name on line 1 should be the name shown on the income tax return on which the income should be reported. For example, if a foreign LLC that is treated as a disregarded entity for U.S. federal tax purposes has a single owner that is a U.S. person, the U.S. owner's name is required to be provided on line 1. If the direct owner of the entity is also a disregarded entity, enter the first owner that is not disregarded for federal tax purposes. Enter the disregarded entity's name on line 2, "Business name/disregarded entity name." If the owner of the disregarded entity is a foreign person, the owner must complete an appropriate Form W-8 instead of a Form W-9. This is the case even if the foreign person has a U.S. TIN.

Line 2

If you have a business name, trade name, DBA name, or disregarded entity name, you may enter it on line 2.

Line 3

Check the appropriate box in line 3 for the U.S. federal tax classification of the person whose name is entered on line 1. Check only one box in line 3.

Limited Liability Company (LLC). If the name on line 1 is an LLC treated as a partnership for U.S. federal tax purposes, check the "Limited Liability Company" box and enter "P" in the space provided. If the LLC has filed Form 8832 or 2553 to be taxed as a corporation, check the "Limited Liability Company" box and in the space provided enter "C" for C corporation or "S" for S corporation. If it is a single-member LLC that is a disregarded entity, do not check the "Limited Liability Company" box; instead check the first box in line 3 "Individual/sole proprietor or single-member LLC."

Line 4, Exemptions

If you are exempt from backup withholding and/or FATCA reporting, enter in the appropriate space in line 4 any code(s) that may apply to you.

Exempt payee code.

- Generally, individuals (including sole proprietors) are not exempt from backup withholding.
- Except as provided below, corporations are exempt from backup withholding for certain payments, including interest and dividends.
- Corporations are not exempt from backup withholding for payments made in settlement of payment card or third party network transactions.
- Corporations are not exempt from backup withholding with respect to attorneys' fees or gross proceeds paid to attorneys, and corporations that provide medical or health care services are not exempt with respect to payments reportable on Form 1099-MISC.

The following codes identify payees that are exempt from backup withholding. Enter the appropriate code in the space in line 4.

1—An organization exempt from tax under section 501(a), any IRA, or a custodial account under section 403(b)(7) if the account satisfies the requirements of section 401(f)(2)

2—The United States or any of its agencies or instrumentalities

3—A state, the District of Columbia, a U.S. commonwealth or possession, or any of their political subdivisions or instrumentalities

4—A foreign government or any of its political subdivisions, agencies, or instrumentalities

5—A corporation

6—A dealer in securities or commodities required to register in the United States, the District of Columbia, or a U.S. commonwealth or possession

7—A futures commission merchant registered with the Commodity Futures Trading Commission

8—A real estate investment trust

9—An entity registered at all times during the tax year under the Investment Company Act of 1940

10—A common trust fund operated by a bank under section 584(a)

11—A financial institution

12—A middleman known in the investment community as a nominee or custodian

13—A trust exempt from tax under section 664 or described in section 4947

The following chart shows types of payments that may be exempt from backup withholding. The chart applies to the exempt payees listed above, 1 through 13.

IF the payment is for . . .	THEN the payment is exempt for . . .
Interest and dividend payments	All exempt payees except for 7
Broker transactions	Exempt payees 1 through 4 and 6 through 11 and all C corporations. S corporations must not enter an exempt payee code because they are exempt only for sales of noncovered securities acquired prior to 2012.
Barter exchange transactions and patronage dividends	Exempt payees 1 through 4
Payments over $600 required to be reported and direct sales over $5,000[1]	Generally, exempt payees 1 through 5[2]
Payments made in settlement of payment card or third party network transactions	Exempt payees 1 through 4

[1] See Form 1099-MISC, Miscellaneous Income, and its instructions.

[2] However, the following payments made to a corporation and reportable on Form 1099-MISC are not exempt from backup withholding: medical and health care payments, attorneys' fees, gross proceeds paid to an attorney reportable under section 6045(f), and payments for services paid by a federal executive agency.

Exemption from FATCA reporting code. The following codes identify payees that are exempt from reporting under FATCA. These codes apply to persons submitting this form for accounts maintained outside of the United States by certain foreign financial institutions. Therefore, if you are only submitting this form for an account you hold in the United States, you may leave this field blank. Consult with the person requesting this form if you are uncertain if the financial institution is subject to these requirements. A requester may indicate that a code is not required by providing you with a Form W-9 with "Not Applicable" (or any similar indication) written or printed on the line for a FATCA exemption code.

A—An organization exempt from tax under section 501(a) or any individual retirement plan as defined in section 7701(a)(37)

B—The United States or any of its agencies or instrumentalities

C—A state, the District of Columbia, a U.S. commonwealth or possession, or any of their political subdivisions or instrumentalities

D—A corporation the stock of which is regularly traded on one or more established securities markets, as described in Regulations section 1.1472-1(c)(1)(i)

E—A corporation that is a member of the same expanded affiliated group as a corporation described in Regulations section 1.1472-1(c)(1)(i)

F—A dealer in securities, commodities, or derivative financial instruments (including notional principal contracts, futures, forwards, and options) that is registered as such under the laws of the United States or any state

G—A real estate investment trust

H—A regulated investment company as defined in section 851 or an entity registered at all times during the tax year under the Investment Company Act of 1940

I—A common trust fund as defined in section 584(a)

J—A bank as defined in section 581

K—A broker

L—A trust exempt from tax under section 664 or described in section 4947(a)(1)

M—A tax exempt trust under a section 403(b) plan or section 457(g) plan

Note. You may wish to consult with the financial institution requesting this form to determine whether the FATCA code and/or exempt payee code should be completed.

Line 5

Enter your address (number, street, and apartment or suite number). This is where the requester of this Form W-9 will mail your information returns.

Line 6

Enter your city, state, and ZIP code.

Part I. Taxpayer Identification Number (TIN)

Enter your TIN in the appropriate box. If you are a resident alien and you do not have and are not eligible to get an SSN, your TIN is your IRS individual taxpayer identification number (ITIN). Enter it in the social security number box. If you do not have an ITIN, see *How to get a TIN* below.

If you are a sole proprietor and you have an EIN, you may enter either your SSN or EIN. However, the IRS prefers that you use your SSN.

If you are a single-member LLC that is disregarded as an entity separate from its owner (see *Limited Liability Company (LLC)* on this page), enter the owner's SSN (or EIN, if the owner has one). Do not enter the disregarded entity's EIN. If the LLC is classified as a corporation or partnership, enter the entity's EIN.

Note. See the chart on page 4 for further clarification of name and TIN combinations.

How to get a TIN. If you do not have a TIN, apply for one immediately. To apply for an SSN, get Form SS-5, Application for a Social Security Card, from your local SSA office or get this form online at *www.ssa.gov*. You may also get this form by calling 1-800-772-1213. Use Form W-7, Application for IRS Individual Taxpayer Identification Number, to apply for an ITIN, or Form SS-4, Application for Employer Identification Number, to apply for an EIN. You can apply for an EIN online by accessing the IRS website at *www.irs.gov/businesses* and clicking on Employer Identification Number (EIN) under Starting a Business. You can get Forms W-7 and SS-4 from the IRS by visiting IRS.gov or by calling 1-800-TAX-FORM (1-800-829-3676).

If you are asked to complete Form W-9 but do not have a TIN, apply for a TIN and write "Applied For" in the space for the TIN, sign and date the form, and give it to the requester. For interest and dividend payments, and certain payments made with respect to readily tradable instruments, generally you will have 60 days to get a TIN and give it to the requester before you are subject to backup withholding on payments. The 60-day rule does not apply to other types of payments. You will be subject to backup withholding on all such payments until you provide your TIN to the requester.

Note. Entering "Applied For" means that you have already applied for a TIN or that you intend to apply for one soon.

Caution: *A disregarded U.S. entity that has a foreign owner must use the appropriate Form W-8.*

Part II. Certification

To establish to the withholding agent that you are a U.S. person, or resident alien, sign Form W-9. You may be requested to sign by the withholding agent even if items 1, 4, or 5 below indicate otherwise.

For a joint account, only the person whose TIN is shown in Part I should sign (when required). In the case of a disregarded entity, the person identified on line 1 must sign. Exempt payees, see *Exempt payee code* earlier.

Signature requirements. Complete the certification as indicated in items 1 through 5 below.

1. Interest, dividend, and barter exchange accounts opened before 1984 and broker accounts considered active during 1983. You must give your correct TIN, but you do not have to sign the certification.

2. Interest, dividend, broker, and barter exchange accounts opened after 1983 and broker accounts considered inactive during 1983. You must sign the certification or backup withholding will apply. If you are subject to backup withholding and you are merely providing your correct TIN to the requester, you must cross out item 2 in the certification before signing the form.

3. Real estate transactions. You must sign the certification. You may cross out item 2 of the certification.

4. Other payments. You must give your correct TIN, but you do not have to sign the certification unless you have been notified that you have previously given an incorrect TIN. "Other payments" include payments made in the course of the requester's trade or business for rents, royalties, goods (other than bills for merchandise), medical and health care services (including payments to corporations), payments to a nonemployee for services, payments made in settlement of payment card and third party network transactions, payments to certain fishing boat crew members and fishermen, and gross proceeds paid to attorneys (including payments to corporations).

5. Mortgage interest paid by you, acquisition or abandonment of secured property, cancellation of debt, qualified tuition program payments (under section 529), IRA, Coverdell ESA, Archer MSA or HSA contributions or distributions, and pension distributions. You must give your correct TIN, but you do not have to sign the certification.

What Name and Number To Give the Requester

For this type of account:	Give name and SSN of:
1. Individual	The individual
2. Two or more individuals (joint account)	The actual owner of the account or, if combined funds, the first individual on the account[1]
3. Custodian account of a minor (Uniform Gift to Minors Act)	The minor[2]
4. a. The usual revocable savings trust (grantor is also trustee)	The grantor-trustee[1]
b. So-called trust account that is not a legal or valid trust under state law	The actual owner[1]
5. Sole proprietorship or disregarded entity owned by an individual	The owner[3]
6. Grantor trust filing under Optional Form 1099 Filing Method 1 (see Regulations section 1.671-4(b)(2)(i)(A))	The grantor*
For this type of account:	**Give name and EIN of:**
7. Disregarded entity not owned by an individual	The owner
8. A valid trust, estate, or pension trust	Legal entity[4]
9. Corporation or LLC electing corporate status on Form 8832 or Form 2553	The corporation
10. Association, club, religious, charitable, educational, or other tax-exempt organization	The organization
11. Partnership or multi-member LLC	The partnership
12. A broker or registered nominee	The broker or nominee
13. Account with the Department of Agriculture in the name of a public entity (such as a state or local government, school district, or prison) that receives agricultural program payments	The public entity
14. Grantor trust filing under the Form 1041 Filing Method or the Optional Form 1099 Filing Method 2 (see Regulations section 1.671-4(b)(2)(i)(B))	The trust

[1] List first and circle the name of the person whose number you furnish. If only one person on a joint account has an SSN, that person's number must be furnished.

[2] Circle the minor's name and furnish the minor's SSN.

[3] You must show your individual name and you may also enter your business or DBA name on the "Business name/disregarded entity" name line. You may use either your SSN or EIN (if you have one), but the IRS encourages you to use your SSN.

[4] List first and circle the name of the trust, estate, or pension trust. (Do not furnish the TIN of the personal representative or trustee unless the legal entity itself is not designated in the account title.) Also see *Special rules for partnerships* on page 2.

*Note. Grantor also must provide a Form W-9 to trustee of trust.

Note. If no name is circled when more than one name is listed, the number will be considered to be that of the first name listed.

Secure Your Tax Records from Identity Theft

Identity theft occurs when someone uses your personal information such as your name, SSN, or other identifying information, without your permission, to commit fraud or other crimes. An identity thief may use your SSN to get a job or may file a tax return using your SSN to receive a refund.

To reduce your risk:

- Protect your SSN,
- Ensure your employer is protecting your SSN, and
- Be careful when choosing a tax preparer.

If your tax records are affected by identity theft and you receive a notice from the IRS, respond right away to the name and phone number printed on the IRS notice or letter.

If your tax records are not currently affected by identity theft but you think you are at risk due to a lost or stolen purse or wallet, questionable credit card activity or credit report, contact the IRS Identity Theft Hotline at 1-800-908-4490 or submit Form 14039.

For more information, see Publication 4535, Identity Theft Prevention and Victim Assistance.

Victims of identity theft who are experiencing economic harm or a system problem, or are seeking help in resolving tax problems that have not been resolved through normal channels, may be eligible for Taxpayer Advocate Service (TAS) assistance. You can reach TAS by calling the TAS toll-free case intake line at 1-877-777-4778 or TTY/TDD 1-800-829-4059.

Protect yourself from suspicious emails or phishing schemes. Phishing is the creation and use of email and websites designed to mimic legitimate business emails and websites. The most common act is sending an email to a user falsely claiming to be an established legitimate enterprise in an attempt to scam the user into surrendering private information that will be used for identity theft.

The IRS does not initiate contacts with taxpayers via emails. Also, the IRS does not request personal detailed information through email or ask taxpayers for the PIN numbers, passwords, or similar secret access information for their credit card, bank, or other financial accounts.

If you receive an unsolicited email claiming to be from the IRS, forward this message to *phishing@irs.gov*. You may also report misuse of the IRS name, logo, or other IRS property to the Treasury Inspector General for Tax Administration (TIGTA) at 1-800-366-4484. You can forward suspicious emails to the Federal Trade Commission at: *spam@uce.gov* or contact them at *www.ftc.gov/idtheft* or 1-877-IDTHEFT (1-877-438-4338).

Visit IRS.gov to learn more about identity theft and how to reduce your risk.

Privacy Act Notice

Section 6109 of the Internal Revenue Code requires you to provide your correct TIN to persons (including federal agencies) who are required to file information returns with the IRS to report interest, dividends, or certain other income paid to you; mortgage interest you paid; the acquisition or abandonment of secured property; the cancellation of debt; or contributions you made to an IRA, Archer MSA, or HSA. The person collecting this form uses the information on the form to file information returns with the IRS, reporting the above information. Routine uses of this information include giving it to the Department of Justice for civil and criminal litigation and to cities, states, the District of Columbia, and U.S. commonwealths and possessions for use in administering their laws. The information also may be disclosed to other countries under a treaty, to federal and state agencies to enforce civil and criminal laws, or to federal law enforcement and intelligence agencies to combat terrorism. You must provide your TIN whether or not you are required to file a tax return. Under section 3406, payers must generally withhold a percentage of taxable interest, dividend, and certain other payments to a payee who does not give a TIN to the payer. Certain penalties may also apply for providing false or fraudulent information.

Exhibit "F"

Certificate Regarding Debarment

Certification
Regarding Debarment, Suspension and Ineligibility

As is required by the Federal Regulations Implementing Executive Order 12549, Debarment and Suspension, 45 CFR Part 76, Government-wide Debarment and Suspension, the applicant certifies, to the best of his or her knowledge and belief, that both it and its principals:

a. Are not presently debarred, suspended, proposed for debarment, declared ineligible, or voluntarily excluded from participation in this transaction by any federal department or agency;

b. Have not within a three-year period preceding this bid proposal and/or application been convicted of or had a civil judgment rendered against them for commission of fraud or a criminal offense in connection with obtaining, attempting to obtain, or performing a public (federal, state, or local) transaction or contract under a public transaction, violation of federal or state antitrust statutes or commission of embezzlement, theft, forgery, bribery, falsification or destruction of records, making false statements, or receiving stolen property;

c. Are not presently indicted for or otherwise criminally or civilly charged by a government entity with commission of any of the offenses enumerated herein; and

d. Have not within a three-year period preceding this bid proposal and/or application had one or more public transactions terminated for cause or default.

Signature:_____
Print Name:_____
Title:_____
Telephone Number:_____
Date:_____

If the bidder is unable to certify to all of the statements in this Certification, such bidder should attach an explanation to this proposal.

Exhibit "G"

Title VI Appendices
"A" through "E"

APPENDIX A

During the performance of this contract, the contractor, for itself, its assignees, and successors in interest (hereinafter referred to as the "contractor") agrees as follows:

1. **Compliance with Regulations**: The contractor (hereinafter includes consultants)will comply with the Acts and the Regulations relative to Nondiscrimination in Federally-assisted programs of the U.S. Department of Transportation, the Federal Highway Administration, as they may be amended from time to time, which are herein incorporated by reference and made a part of this contract.

2. **Nondiscrimination**: The contractor, with regard to the work performed by it during the contract, will not discriminate on the grounds of race, color, or national origin in the selection and retention of subcontractors, including procurements of materials and leases of equipment. The contractor will not participate directly or indirectly in the discrimination prohibited by the Acts and the Regulations, including employment practices when the contract covers any activity, project, or program set forth in Appendix B of49 CFR Part 21.

3. **Solicitations for Subcontracts, Including Procurements of Materials and Equipment**: In all solicitations, either by competitive bidding, or negotiation made by the contractor for work to be performed under a subcontract, including procurements of materials, or leases of equipment, each potential subcontractor or supplier will be notified by the contractor of the contractor's obligations under this contract and the Acts and the Regulations relative to Nondiscrimination on the grounds of race, color, or national origin.

4. **Information and Reports**: The contractor will provide all information and reports required by the Acts, the Regulations, and directives issued pursuant thereto and will permit access to its books, records, accounts, other sources of information, and its facilities as may be determined by the Recipient or the Federal Highway Administration to be pertinent to ascertain compliance with such Acts, Regulations, and instructions. Where any information required of a contractor is in the exclusive possession of another who fails or refuses to furnish the information, the contractor will so certify to the Recipient or the Federal Highway Administration, as appropriate, and will set forth what efforts it has made to obtain the information.

5. **Sanctions for Noncompliance**: In the event of a contractor's noncompliance with the Nondiscrimination provisions of this contract, the Recipient will impose such contract sanctions as it or the Federal Highway Administration may determine to be appropriate, including, but not limited to:

   a. withholding payments to the contractor under the contract until the contractor complies; and/or
   b. cancelling, terminating, or suspending contract, in whole or in part.

6. **Incorporation of Provisions**: The contractor will include the provisions of paragraphs one through six in every subcontract, including procurements of materials and leases of equipment, unless exempt by the Acts, the Regulations and directives issued pursuant thereto. The contractor will take action with respect to any subcontract or procurement as the Recipient or the Federal Highway Administration may direct as a means of enforcing such provisions including sanctions for noncompliance. Provided, that if the contractor becomes involved in, or is threatened with litigation by a subcontractor, or supplier because of such direction, the contractor may request the Recipient to enter into any litigation to protect the interests of the Recipient. In addition, the contractor may request the United States to enter into the litigation to protect the interests of the United States.

APPENDIX B

CLAUSES FOR DEEDS TRANSFERRING UNITED STATES PROPERTY

The following clauses will be included in deeds effecting or recording the transfer of real property, structures, or improvements thereon, or granting interest therein from the United States pursuant to the provisions of Assurance 4:

NOW, THEREFORE, the U.S. Department of Transportation as authorized by law and upon the condition that the **COUNTY OF HIDALGO** will accept title to the lands and maintain the project constructed thereon in accordance with all applicable federal statutes, the Regulations for the Administration of all Department of Transportation programs, and the policies and procedures prescribed by the Federal Highway Administration of the U.S. Department of Transportation in accordance and in compliance with all requirements imposed by Title 49, Code of Federal Regulations, U.S. Department of Transportation, Subtitle A, Office of the Secretary, Part 21, Nondiscrimination in Federally-assisted programs of the U.S. Department of Transportation pertaining to and effectuating the provisions of Title VI of the Civil Rights Act of 1964 (78 Stat. 252; 42 U.S.C. § 2000d to 2000d-4), does hereby remise, release, quitclaim and convey unto the **COUNTY OF HIDALGO** all the right, title and interest of the U.S. Department of Transportation in and to said lands described in Exhibit 1 attached hereto and made a part hereof.

(HABENDUM CLAUSE)

TO HAVE AND TO HOLD said lands and interests therein unto **COUNTY OF HIDALGO** and its successors forever, subject, however, to the covenants, conditions, restrictions and reservations herein contained as follows, which will remain in effect for the period during which the real property or structures are used for a purpose for which Federal financial assistance is extended or for another purpose involving the provision of similar services or benefits and will be binding on the **COUNTY OF HIDALGO**, its successors and assigns.

The **COUNTY OF HIDALGO**, in consideration of the conveyance of said lands and interests in lands, does hereby covenant and agree as a covenant running with the land for itself, its successors and assigns, that (1) no person will on the grounds of race, color, or national origin, be excluded from participation in, be denied the benefits of, or be otherwise subjected to discrimination with regard to any facility located wholly or in part on, over ,or under such lands hereby conveyed [,] [and]* (2) that the **COUNTY OF HIDALGO** will use the lands and interests in lands and interests in lands so conveyed, in compliance with all requirements imposed by or pursuant to Title 49, Code of Federal Regulations, U.S. Department of Transportation, Subtitle A, Office of the Secretary, Part 21, Nondiscrimination in Federally-assisted programs of the U.S. Department of Transportation, Effectuation of Title VI of the Civil Rights Act of 1964, and as said Regulations and Acts may be amended[, and(3) that in the event of breach of any of the above-mentioned nondiscrimination conditions, the Department will have a right to enter or re-enter said lands and facilities on said land ,and that above described land and facilities will thereon revert to and vest in and become the absolute property of the U.S. Department of Transportation and its assigns as such interest existed prior to this instruction].*

(*Reverted clause and related language to be used only when it is determined that such a clause is necessary in order to make clear the purpose of Title VI.)

APPENDIX C

CLAUSES FOR TRANSFER OF REAL PROPERTY ACQUIRED OR IMPROVED UNDER THE ACTIVITY, FACILITY, OR PROGRAM

The following clauses will be included in deeds, licenses, leases, permits, or similar instruments entered into by the **COUNTY OF HIDALGO** pursuant to the provisions of Assurance 7(a):

A. The (grantee, lessee, permittee, etc. as appropriate) for himself/herself, his/her heirs, personal representatives, successors in interest, and assigns, as a part of the consideration hereof, does hereby covenant and agree [in the case of deeds and leases add "as a covenant running with the land"] that:

   1. In the event facilities are constructed, maintained, or otherwise operated on the property described in this (deed, license, lease, permit, etc.) for a purpose for which a U.S. Department of Transportation activity, facility, or program is extended or for another purpose involving the provision of similar services or benefits, the (grantee, licensee, lessee, permitted, etc.) will maintain and operate such facilities and services in compliance with all requirements imposed by the Acts and Regulations (as may be amended)such that no person on the grounds of race, color, or national origin, will be excluded from participation in, denied the benefits of, or be otherwise subjected to discrimination in the use of said facilities.

B. With respect to licenses, leases, permits, etc., in the event of breach of any of the above Nondiscrimination covenants, **COUNTY OF HIDALGO** will have the right to terminate the (lease, license, permit, etc.) and to enter, re-enter, and repossess said lands and facilities thereon, and hold the same as if the (lease, license, permit, etc.) had never been made or issued.*

C. With respect to a deed, in the event of breach of any of the above Nondiscrimination covenants, the **COUNTY OF HIDALGO** will have the right to enter or re-enter the lands and facilities thereon, and the above described lands and facilities will there upon revert to and vest in and become the absolute property of the **COUNTY OF HIDALGO** and its assigns.*

(*Reverted clause and related language to be used only when it is determined that such a clause is necessary in order to make clear the purpose of Title VI.)

APPENDIX D

CLAUSES FOR CONSTRUCTION/USE/ACCESS TO REAL PROPERTY ACQUIRED UNDER THE ACTIVITY, FACILITY OR PROGRAM

The following clauses will be included in deeds, licenses, permits, or similar instruments/agreements entered into by **COUNTY OF HIDALGO** pursuant to the provisions of Assurance 7(b):

A. The (grantee, licensee, permittee, etc., as appropriate) for himself/herself, his/her heirs, personal representatives, successors in interest, and assigns, as a part of the consideration hereof, does hereby covenant and agree (in the case of deeds and leases add, "as a covenant running with the land") that (1) no person on the ground of race, color ,or national origin, will be excluded from participation in, denied the benefits of, or be otherwise subjected to discrimination in the use of said facilities, (2) that in the construction of any improvements on, over, or under such land, and the furnishing of services thereon, no person on the ground of race, color, or national origin, will be excluded from participation in, denied the benefits of, or otherwise be subjected to discrimination, (3) that the (grantee, licensee, lessee, permittee, etc.) will use the premises in compliance with all other requirements imposed by or pursuant to the Acts and Regulations, as amended, set forth in this Assurance.

B. With respect to (licenses, leases, permits, etc.), in the event of breach of any of the above Nondiscrimination covenants, **COUNTY OF HIDALGO** will have the right to terminate the (license, permit, etc., as appropriate) and to enter or re-enter and repossess said land and the facilities thereon, and hold the same as if said(license, permit, etc., as appropriate) had never been made or issued.*

C. With respect to deeds, in the event of breach of any of the above Nondiscrimination covenants, **COUNTY OF HIDALGO** will there upon revert to and vest in and become the absolute property of **COUNTY OF HIDALGO** and its assigns.*

(*Reverted clause and related language to be used only when it is determined that such a clause is necessary in order to make clear the purpose of Title VI.)

APPENDIX E

During the performance of this contract, the contractor, for itself, its assignees, and successors in interest (hereinafter referred to as the "contractor") agrees to comply with the following nondiscrimination statutes and authorities; including but not limited to:

Pertinent Nondiscrimination Authorities:

- Title VI of the Civil Rights Act of 1964 (42 U.S.C. § 2000d et seq., 78 stat. 252), (prohibits discrimination on the basis of race, color, national origin); and 49CFR Part 21.
- The Uniform Relocation Assistance and Real Property Acquisition Policies Act of1970, (42U.S.C. § 4601), (prohibits unfair treatment of persons displaced or whose property has been acquired because of Federal or Federal-aid programs and projects);
- Federal-Aid Highway Act of 1973, (23U.S.C. § 324et seq.), (prohibits discrimination on the basis of sex);
- Section 504 of the Rehabilitation Act of 1973, (29U.S.C. § 794 et seq.), as amended, (prohibits discrimination on the basis of disability); and 49CFRPart 27;
- The Age Discrimination Act of 1975, as amended,(42U.S.C. § 6101 et seq.), (prohibits discrimination on the basis of age);
- Airport and Airway Improvement Act of 1982, (49U.S.C. § 4 71, Section 4 7123),as amended, (prohibits discrimination based on race, creed, color, national origin, or sex);
- The Civil Rights Restoration Act of 1987,(PL 100-209), (Broadened the scope, coverage and applicability of Title VI of the Civil Rights Act of 1964, The Age Discrimination Act of 1975 and Section 504 of the Rehabilitation Act of 1973, by expanding the definition of the terms "programs or activities" to include all of the programs or activities of the Federal-aid recipients, sub recipients and contractors, whether such programs or activities are Federally funded or not);
- Titles II and III of the Americans with Disabilities Act, which prohibit discrimination on the basis of disability in the operation of public entities, public and private transportation systems, places of public accommodation, and certain testing entities (42 U.S.C. §§ 12131-12189)as implemented by Department of Transportation regulations at 49C.F.R. parts 37 and 38;
- The Federal Aviation Administration's Nondiscrimination statute (49U.S.C. § 47123) (prohibits discrimination on the basis of race, color, national origin, and sex);
- Executive Order 12898, Federal Actions to Address Environmental Justice in Minority Populations and Low-Income Populations, which ensures discrimination against minority populations by discouraging programs, policies, and activities with disproportionately high and adverse human health or environmental effects on minority and low-income populations;
- Executive Order 13166, Improving Access to Services for Persons with Limited English Proficiency, and resulting agency guidance, national origin discrimination includes discrimination because of limited English proficiency (LEP). To ensure compliance with Title VI, you must take reasonable steps to ensure that LEP persons have meaningful access to your programs (70 Fed. Reg. at 74087 to 74100);
- Title IX of the Education Amendments of1972, as amended, which prohibits you from discriminating because of sex in education programs or activities (20 U .S.C. 1681 et seq).

Exhibit "H"

Proposer's Affidavit

PROPOSER'S AFFIDAVIT

PROPOSER'S AFFIDAVIT OF NON-COLLUSION
NON-CONFILICT OF INTEREST, AND ANTI-LOBBYING
FOR "ONLINE PHARMACY BILLING SERVICES"
PROJECT NO.: RFP 2017-149-06-21-HGO

STATE OF TEXAS
COUNTY OF HIDALGO

Affiant, _____, being first duly sworn, deposes that:

(1) Affiant does hereby state neither the proposer nor any of the proposer's officers, partners, owners, agents, representatives, employees, or parties in interest, has in any way colluded, conspired, agreed, directly or indirectly with any person, firm, corporation, or other proposer, or potential proposer, to provide any money or other valuable consideration for assistance in procuring or attempting to procure a contract or fix the prices in the attached proposed or the proposal of any other proposer, and further states that no such money or other reward will be hereinafter paid.

(2) Affiant further states they have neither recommended or suggested to Hidalgo County or nay of its officials or employees, any of the terms or provisions set forth in their Request for Proposal and subsequent agreement, except at a meeting open to all interested proposers, of which proper notice was given.

(3) Affiant, further states their officers, employees, or agents have not, and will not attempt to lobby, directly or indirectly, the Hidalgo County Commissioner's Court between proposal submission date and award by the Hidalgo County Commissioner's Court.

(4) Affiant further states no officer, or stockholder of the proposer is a member of the staff, or related to any employee of the Hidalgo County except as noted herein below:

_____

Signature/Title: _____

_____

Subscribed and sworn to before me this _____day of _____, 2017.

_____

Notary Public

My commission expires:_____, 2017

HIDALGO COUNTY
(Including all funding sources, programs, and entities)
REQUEST FOR PROPOSAL
"ONLINE PHARMACY BILLING SERVICES"

RFB No.: 2017-149-06-21-HGO

RFP SUBMITTAL CHECK LIST

All forms listed below must be included in the RFP Response.

Indicate with a check mark (✓) the Forms completed and included in this response:

_____ Page 9 of Legal Notice

_____ Exhibit "B" Bid Page

_____ Exhibit "C" -Acknowledgement forms (Pages 3 & 4)

_____ Exhibit "D" -CIQ Form -Copy of County Clerk File Recording fee receipt. (if applicable)

_____ Exhibit "E" Vendor Bidder Applications and IRS form W-9

_____ Exhibit "F" Certification Regarding Debarment

_____ Exhibit "H" Proposer Affidavit

_____ SAMS.gov Registration Acknowledgement www.sam.gov

_____ One (1) Original, Seven (7) Copies of Bid(s) and One (1) CD in PDF format (see number 2 of Legal Notice).

THE STATE OF TEXAS §
§
COUNTY OF HIDALGO §

SERVICES AGREEMENT
C-00-000-00-00

THIS AGREEMENT is made as of the ___day of _____, **2017** by and between **COUNTY OF HIDALGO, TEXAS,** a political subdivision of the State of Texas ("County") and _____ (the "Company").

W I T N E S S E T H:

WHEREAS, County desires to contract for Online Pharmacy Billing Services for qualified clients of the County Indigent Health Care Level 2 Pilot Program of County's Health & Human Services Department (hereinafter "Health Department") that are more specifically set forth hereinafter;

WHEREAS, Company has submitted a proposal to provide services in accordance with the specifications as bid, a copy of Request for Proposals (RFP) Procurement Packet and Proposal being attached hereto as Exhibits "A" and "B" respectively, and incorporated herein for all purposes (the "Specifications") and agreed to provide the services enumerated hereinafter for Health & Human Services Department; and

WHEREAS, in recognition of and in consideration of Company's agreement to perform the Services in accordance with Specifications, the Commissioner's Court of County awarded the bid to Company.

NOW, THEREFORE, for the mutual consideration expressed hereinafter, County and Company agree as follows:

1. Company agrees to provide to County and its Health & Human Services Department the services required of Online Pharmacy Billing Services for the County's

Health & Human Services Department County Indigent Health Care Level 2 Pilot Program.

These services include, but are not limited to:

a) Provide and maintain a system for pharmacies within the network to bill claims online;

b) Provide a discount for all prescriptions billed online of at least AWP less 40% of net cost for generic and 13% brand drug as starting point;

c) Provide the ability to limit members to three prescriptions per month;

d) Provide the ability to limit members to a certain amount per drug per month;

e) Provide real-time online eligibility management;

f) Provide ability to maintain and develop a network of pharmacies;

g) Provide bi-weekly, monthly and quarterly reports summarizing drug expenditures;

h) Provide Customer Service Help Desk to service the County of Hidalgo members and providers;

i) Provide ability to load electronic eligibility files within 24 hours of receipt;

j) Provide ability to maintain and provide a cost-effective drug formulary;

k) Impose a generic only program with an override feature for any name brand drug;

l) Provide the same pricing to members who exceed the three prescriptions per month as the County would receive;

m) Provide County with all rebates issued by pharmaceutical companies for any medications;

n) Provide electronic billing to interface with software provider for County of Hidalgo Health and Human Services;

o) Provide ability to run real-time online reports;

p) Provide actual numbers of covered lives for any date range requested on reports;

q) Provide a yearly summary report reflecting drug utilization and identify potential cost savings to the County.

This agreement does not extend to any third parties any duties or benefits conferred in any manner hereunder or otherwise.

DRAFT

2. Company represents that it is licensed by the State of Texas and qualified to perform and execute the services provided above. If such license is suspended or revoked, this Contract shall automatically be terminated and Company shall immediately notify the County Judge of Hidalgo.

3. As consideration for the above and foregoing, County agrees to pay Company $_____ (information to be entered for actual contract).

4. When County determines that it needs a quantity of the products to be delivered, it will, according to its Purchasing Policies, complete and submit to Company a Purchase Order describing the type and quantity of the products required. The products are to be delivered by Company to the location in Hidalgo County specified by County in its Purchase Order.

5. As consideration for rendering the Service provided under this Contract, the County agrees to pay Company for each Purchase Order based on the prices set out in Exhibit "B". Company shall render invoices for each Purchase Order, and the invoices shall be paid by County in accordance with the Texas Prompt Payment Act, Tex. Govt. Code Ch. 2251.

4. Company must comply with all applicable laws and regulations of the State of Texas and County and Health & Human Services Department policies. Notwithstanding the foregoing sentence, Company represents and maintains that Company is an independent Contractor and is not an employee of County, the Health & Human Services Department, or any agency thereof, and represents and warrants that Company does not desire or request any fringe benefits provided to employees of County, Health & Human Services Department and/or any agency of County.

DRAFT

5. This Agreement may be terminated by County without cause upon thirty (30) days written notice.

6. Company agrees to provide liability insurance covering all activities in providing the services for County in an amount not less than the minimum amounts prescribed by the Texas Tort Claims Act, §100.001, et seq., Texas Civil Practices and Remedies Code, and shall furnish County a certificate issued by the insurer that such insurance is in full force and effect.

7. Company may not assign the obligations or rights under this Contract to any person without the prior written consent of County.

8. **Indemnification: Company will indemnify and hold County harmless from any and all claims, actions, liability, and expenses (including costs of judgments, settlements, court costs, and attorneys' fees, regardless of the outcome of such claim or action) caused by, resulting from, or alleging negligent or intentional acts or omissions or any failure to perform any obligation undertaken or any covenant in this Contract, whether such act, omission, or failure was the Company's or that of any person providing services hereunder through or for the Company. Upon written notice from the County, the Company will resist and defend at its own expense, and by counsel reasonably satisfactory to County, any such claim or action. The Company will carry proper insurance with the County as an additional named insured.**

9. This Contract shall be for a period of _____ months commencing upon Commissioners' Court approval _____and expiring on _____2017.

10. **Texas Law to Apply.** This Contract shall be construed under and in accordance with the laws of the State of Texas, and all obligations of the parties created

hereunder are performable in Hidalgo County, Texas. The parties hereby consent to personal jurisdiction in Hidalgo County, Texas.

11. **Entire Agreement.** This Agreement contains the entire contract between the parties hereto, and each party acknowledges that neither has made (either directly or through any agent or representative) any representation or agreement in connection with this Agreement not specifically set forth herein. This Agreement may be modified or amended only by agreement in writing executed by the parties hereto, and not otherwise.

12. **Immunities.** Nothing in this Agreement is intended to and County does not hereby waive, release or relinquish any right to assert any of the defenses County enjoys by virtue of the state or federal constitution, laws, rules or regulations, and any sovereign, official or qualified immunity available to County as to any claim or action of any person, entity, or individual against County.

13. Except as may be otherwise specifically provided in this Contract, all notices, demands, requests or communications required or permitted hereunder shall be in writing and shall either be (i) personally delivered against a written receipt, or (ii) sent by registered or certified mail, return receipt requested, postage prepaid and addressed to the parties at the addresses set forth below, or at such other addresses as may have been theretofore specified by written notice delivered in accordance herewith:

If to County: County of Hidalgo, Texas
Attention: County Judge
100 East Cano, 2nd Floor
Edinburg, Texas 78539

If to Company:

DRAFT

Each notice, demand, request or communication which shall be delivered or mailed in the manner described above shall be deemed sufficiently given for all purposes at such time as it is personally delivered to the addressee or, if mailed, at such time as it is deposited in the Unites States mail.

14. **Commitment of Current Revenues Only.** In the event that, during any term hereof, the Commissioners Court does not appropriate sufficient funds to meet the obligations of County under this Agreement, County may terminate this Agreement upon ten (10) days written notice to Company. County agrees, however, to use reasonable efforts to secure funds necessary for the continuing right to terminate this Agreement at the expiration of each budget period of County.

15. **Nondiscrimination:** Company/Contractor/Vendor, including subcontractors, assignees and successors in interest, ensures that no person shall on the grounds of race, religion, color, national origin, sex, age, disability, or any other protected class under law, be excluded from participation in, be denied the benefits of, or be otherwise subjected to discrimination or retaliation in any federally or non-federally funded program or activity when providing any services described herein under this contract/agreement.

16. **Additional Documents.** The parties hereto covenant and agree that they will execute each such other and further instruments and documents as are or may

become necessary or convenient to effectuate and carry out the terms of this contract/agreement.

17. Company shall provide a sufficient number of trucks, vehicles, personnel and equipment available to safely and efficiently provide the Services.

18. In case any one or more of the provisions contained in this Agreement shall for any reason be held to be invalid, illegal or unenforceable in any respect, such invalidity, illegality, or unenforceability shall not affect any other provision thereof and this Agreement shall be construed as if such invalid, illegal, or unenforceable provision had never been contained herein.

19. This Agreement shall be binding upon and inure to the benefit of and be enforceable by the parties hereto and their respective heirs, executors, administrators, legal representatives, successors, and assigns where permitted by this Agreement.

DRAFT

EXECUTED and effective as of the day and year first written above.

Approved by Commissioners' Court on this the _____day of _____ , 2017.

COUNTY OF HIDALGO, TEXAS

By: _____
Ramon Garcia, County Judge

Date: _____

ATTEST:

By: _____
Arturo Guajardo, Jr., County Clerk

Date: _____

COMPANY:

By: _____

Printed: _____

Date: _____

Approved as to form:
Office of Criminal District Attorney
Ricardo Rodriguez, Jr.

By: _____
Josephine Ramirez, ADA

Date: _____

DRAFT

EXHIBIT "A"
REQUEST FOR PROPOSALS PROCUREMENT PACKET

DRAFT

EXHIBIT "B"

PROPOSAL

DRAFT

DRAFT

EXHIBIT "C"

INSURANCE

Zimbra **heidi.ortiz@co.hidalgo.tx.us**

Re: Online Pharmacy Billing Services

From : Robert Vina <robert.vina@da.co.hidalgo.tx.us> Fri, May 26, 2017 10:10 AM

1 attachment

Subject : Re: Online Pharmacy Billing Services

To : Heidi Garcia Ortiz <heidi.ortiz@co.hidalgo.tx.us>

Cc : Josephine Ramirez <josephine.ramirez@da.co.hidalgo.tx.us>

Heidi,
Please find attached the draft services agreement for online pharmacy services with suggested revisions. Including, additions of provisions from other service contracts and removal of references to Physician. Please note, revisions to exhibit A and Exhibit B pages to reflect language regarding the proposal packet on first page of contract rather than physician documentation. Please verify if language is correct.

With the inclusion of the revision made on the attached form it is approved as to form. Please let us know if you have any questions.
Thank you,

Robert Viña III

Assistant District Attorney
Civil Litigation Division

Office of the Criminal District Attorney
Hidalgo County, Texas
100 E. Cano
Edinburg, TX 78539
(956) 292-7609 EXT 8187
(956) 292-7619 FAX

robert.vina@da.co.hidalgo.tx.us

****

The information contained in this e-mail may be 1.SUBJECT TO THE ATTORNEY-CLIENT PRIVILEGE; 2.ATTORNEY WORK PRODUCT; and/or 3.CONFIDENTIAL. It is intended only for the individual or entity designated above. Any distribution, copying, or use of or reliance upon the information contained in this e-mail by or to anyone other than the recipient designated above by the sender is unauthorized and strictly prohibited. **IF**

YOU HAVE RECEIVED THIS COMMUNICATION IN ERROR, PLEASE ADVISE THE SENDER BY REPLY E-MAIL TO robert.vina@da.co.hidalgo.tx.us AND DELETE THE COMMUNICATION.

****

On Wed, May 24, 2017 at 2:50 PM, Heidi Garcia Ortiz <heidi.ortiz@co.hidalgo.tx.us> wrote:

> Hi Robert:
>
> Attached you will find the draft contract on the above-referenced project. The Health Dept and Precinct 2 are requesting that the packet is placed on the agenda for the 30th for authority to advertise. I am certain that there will be changes for the final contract, however, I just need the draft to complete my packet. Please let me know if you need anything else.
>
> Thank you,
>
> Heidi
>
> --
> Heidi Garcia Ortiz, Buyer III
> Hidalgo County Purchasing Department
> 2802 S. Business Hwy 281
> Edinburg, TX 78539
> 956-292-7000 Ext. 4877
> 956-900-4455 Cell Phone
> 956-292-7612 Fax
> heidi.ortiz@co.hidalgo.tx.us

REVISED-Draft Online Pharmacy Service Contract.docx
28 KB

Hidalgo County Purchasing Department
2812 S. Business Highway 281
New Administration Building
Edinburg, Texas 78539
(956) 318-2626/ Fax: (956) 318-2629

MEMORANDUM

(Department's Approval)

TO: **Hidalgo County Health Department**

ATTN: Dairen Sarmiento
via email: dairen.sarmiento@hchd.org

FROM: Heidi Garcia Ortiz, Buyer III
Hidalgo County Purchasing Department

DATE: May 26, 2017

RE: **Approval or Disapproval of Specifications for: *Proposal No.-2017-149-06-21-HGO*-HIDALGO COUNTY HEALTH DEPARTMENT "Online Pharmacy Billing Services"**

Please review the **SPECIFICATIONS** and verify if all requirements are met by signing below and indicating **APPROVE** (or) **DISAPPROVE.** If specifications are **NOT** met, make any and all modifications necessary and return the copy to the designated Buyer in the Purchasing Department.

If you have any questions, please call me at (956) 318-2626 ext# 4877.

APPROVE ☑	**DISAPPROVE** ☐
APPROVE WITH MODIFICATIONS ☐	

Funds Availability: ✓ YES/_____ NO/_____

Other (Specify) _____

Budget Account No.: 7-1100-444-00-240-005-0-843

Dairen Sarmiento Dairen Sarmiento HHS 5-26-17

SIGNATURE *PRINTED NAME* *DEPARTMENT* *DATE*

SUBMIT THIS FORM TO THE HIDALGO COUNTY PURCHASING DEPARTMENT, VIA FAX TO (956) 292-7612 or e-mail: heidi.ortiz@co.hidalgo.tx.us by no later than Friday, May 26, 2017.

AI-59743 **Purchasing Department** **22. G. 1.**

CC - REGULAR

Meeting Date: 05/30/2017

Submitted For: Marty Salazar, PURCHASING DEPT.

Submitted By: Matilde Faz, PURCHASING DEPT.

Department: PURCHASING DEPT.

Information

CAPTION

Presentation of Bids received (as detailed in tabulation sheet contained herein) for the purpose of award to the responsible multiple vendors submitting the lowest and best bids (including meeting specifications and/or requirements) with approval of contract document for project titled: Hidalgo County "Pipes & Related Miscellaneous Items" through RFB No.: 2017-046-04-05-FAZ as follow:

A. Rio Valley Pipe, LLC d/b/a CAPA;
B. HD Supply Waterworks, LTD
C. Act Pipe & Supply, Inc.
D. Ferguson Enterprises d/b/a Ferguson Waterworks
E. Aguaworks Pipe & Supply, LLC

BACKGROUND

I. 22 bid packets distributed to vendors;
2. 5 bids received for tabulation

Multiple Bids;
A. Rio Valley Pipe, LLC d/b/a CAPA;
B. HD Supply Waterworks, LTD
C. Act Pipe & Supply, Inc.
D. Ferguson Enterprises d/b/a Ferguson Waterworks
E. Aguaworks Pipe & Supply, LLC

1. Current contract expires: June 29, 2017
2. New contract will commence: June 30, 2017
3. Contract document was reviewed and approved as to form by Legal Counsel.

Fiscal Impact

CALENDAR YEAR: **ACCT. #:**

FUNDS AVAILABLE Y/N?: **MATCHING FUNDS Y/N?:**

BUDGETARY IMPACT:

Funds available, services are on an "as needed" basis.

Attachments

Recommendation of Award Memos
Tabulation Sheet
Participating Log
HB 1295 Signed, Notarized & Acknowledged & Insurances
legal approval
contract
contract
legal approval
contract
legal approval
contract
legal approval

Form Review

Inbox	Reviewed By	Date
Purchasing - Internal	Marty Salazar	05/22/2017 11:46 AM
Budget & Management	Veronica Ortiz	05/22/2017 01:29 PM
Final Approval	Monica Salinas	05/26/2017 02:58 PM
Form Started By: Matilde Faz		Started On: 05/08/2017 09:17 AM
Final Approval Date: 05/26/2017		

Hidalgo County Purchasing Department
2812 S. Business Highway 281
Administration Building
Edinburg, Texas 78539
(956) 318-2626 / Fax: (956) 292-7612

MEMORANDUM

(Department's Recommendation)

TO: **ALL DEPARTMENT HEAD AND/OR ASSIGN PERSONAL**

FROM: Matilde "Maty" Faz, Buyer II
Hidalgo County Purchasing Department

DATE: May 2, 2017

RE: **BID AWARD RECOMMENDATION/CONCURRENCE REQUEST**
Bid No.-2017-046-04-05-FAZ
HIDALGO COUNTY- (All Funding Sources, Programs & Entities)
"Pipes & Related Miscellaneous Items"

We have received FIVE (5) qualifying responses in reference to the above mentioned project. Refer to enclosed copy of the bid tabulation sheet for your review and recommendation/non-recommendation. Please advice if you wish to proceed with this bid to award or do you wish to reject and re-advertise?

We would like to present your recommendation on the next Commissioner's Court Meeting: therefore, we need your response no later than **May 5, 2017 @ 10:00 a.m. or if possible earlier**. Please indicate your recommendation or any concerns on the space provided below and reply to the Purchasing Department via fax to (956) 292-7612 or via email to: matilde.faz@co.hidalgo.tx.us

☑ **APPROVE** ☐ **DISAPPROVE and/or REJECT**

PCT #1
ROAD & BRIDGE
BUDGET ACCOUNT No.: 2-1200-431-00-121-005-0- bID

Recommendation (Indicate vendor(s) and reason):

Award to multiple vendors.

Should you have any questions or require further information please do not hesitate to call me at 318-2626 - ext. 4854. Thank you for your attention and cooperation to this matter.

AUTHORIZED SIGNATURE	PRINTED NAME	DEPARTMENT	DATE
Amy Sanz-Smith	Amy Sanz-Smith	PCT 1	5/4/17

Enclosures

Hidalgo County Purchasing Department
2812 S. Business Highway 281
Administration Building
Edinburg, Texas 78539
(956) 318-2626 / Fax: (956) 292-7612

MEMORANDUM

(Department's Recommendation)

TO: **ALL DEPARTMENT HEAD AND/OR ASSIGN PERSONAL**

FROM: Matilde "Maty" Faz, Buyer II
Hidalgo County Purchasing Department

DATE: May 2, 2017

RE: **BID AWARD RECOMMENDATION/CONCURRENCE REQUEST**
Bid No.-2017-046-04-05-FAZ
HIDALGO COUNTY- (All Funding Sources, Programs & Entities)
"Pipes & Related Miscellaneous Items"

We have received FIVE (5) qualifying responses in reference to the above mentioned project. Refer to enclosed copy of the bid tabulation sheet for your review and recommendation/non-recommendation. Please advice if you wish to proceed with this bid to award or do you wish to reject and re-advertise?

We would like to present your recommendation on the next Commissioner's Court Meeting: therefore, we need your response no later than **May 5, 2017 @ 10:00 a.m. or if possible earlier**. Please indicate your recommendation or any concerns on the space provided below and reply to the Purchasing Department via fax to (956) 292-7612 or via email to: **matilde.faz@co.hidalgo.tx.us**

☑ **APPROVE** ☐ **DISAPPROVE and/or REJECT**

BUDGET ACCOUNT No.: 7-1200-431-00-123-005-0-610

Recommendation (Indicate vendor(s) and reason):

Award Bids each Category

Should you have any questions or require further information please do not hesitate to call me at 318-2626 - ext. 4854. Thank you for your attention and cooperation to this matter.

AUTHORIZED SIGNATURE	PRINTED NAME	DEPARTMENT	DATE
	Joe M. Flores	Pct #3	5/8/17

Enclosures

Hidalgo County Purchasing Department
2812 S. Business Highway 281
Administration Building
Edinburg, Texas 78539
(956) 318-2626 / Fax: (956) 292-7612

MEMORANDUM

(Department's Recommendation)

TO: **ALL DEPARTMENT HEAD AND/OR ASSIGN PERSONAL**

FROM: Matilde "Maty" Faz, Buyer II
Hidalgo County Purchasing Department

DATE: May 2, 2017

RE: **BID AWARD RECOMMENDATION/CONCURRENCE REQUEST**
Bid No.-2017-046-04-05-FAZ
HIDALGO COUNTY- (All Funding Sources, Programs & Entities)
"Pipes & Related Miscellaneous Items"

We have received FIVE (5) qualifying responses in reference to the above mentioned project. Refer to enclosed copy of the bid tabulation sheet for your review and recommendation/non-recommendation. Please advice if you wish to proceed with this bid to award or do you wish to reject and re-advertise?

We would like to present your recommendation on the next Commissioner's Court Meeting: therefore, we need your response no later than **May 5, 2017 @ 10:00 a.m. or if possible earlier**. Please indicate your recommendation or any concerns on the space provided below and reply to the Purchasing Department via fax to (956) 292-7612 or via email to: **matilde.faz@co.hidalgo.tx.us**

☑ **APPROVE** ☐ **DISAPPROVE and/or REJECT**

BUDGET ACCOUNT No.: 7-1200-431-00-124-007-0-610

Recommendation (Indicate vendor(s) and reason):

Multiple Award.

Should you have any questions or require further information please do not hesitate to call me at 318-2626 - ext. 4854. Thank you for your attention and cooperation to this matter.

	Ramon Rodriguez	Road & Bridge	5/5/17
AUTHORIZED SIGNATURE	**PRINTED NAME**	**DEPARTMENT**	**DATE**

Enclosures

TABULATION SHEET
Hidalgo County (All funding sources, programs & entities)
"PIPES & Related Miscellaneous Items"
RFB No.: 2017-046-04-05-FAZ

CORRUGATED POLYVINYL CHLORIDE (PVC) STORM SEWER PIPE

NIGP CODE: 665-89 Polyvinyl Chloride (PVC)

VENDORS	Rio Valley Pipe LLC d/b/a CAPA	HD Supply Water Works	Act Pipe & Supply	Ferguson Waterworks	Aguaworks Pipe & Supply
12" LF	No bid	7.53	No bid	6.69	No bid
15" LF	No bid	11.12	No bid	11.71	No bid
18" LF	No bid	16.14	No bid	15.74	No bid
24" LF	No bid	32.38	No bid	30.82	No bid
30" LF	No bid	39.68	No bid	44.40	No bid
36" LF	No bid	55.17	No bid	65.63	No bid
42" LF	No bid	No bid	No bid	85.86	No bid
48" LF	No bid	No bid	No bid	No bid	No bid

CATEGORY (A) – PIPES

CORRUGATED STEEL STORM SEWER PIPE

NIGP CODE: 210-29 Corrugated Galvanized Metal Pipe

(UNIT PRICE INCLUDES ONE GASKETED BAND CONNECTION FOR EVERY 20 FOOT JOINT)

TYPE "IR" PIPE

VENDORS	Rio Valley Pipe LLC d/b/a CAPA	HD Supply Water Works	Act Pipe & Supply	Ferguson Waterworks	Aguaworks Pipe & Supply
12" LF	No bid	No bid	No bid	No bid	No bid
15" LF	No bid	No bid	No bid	No bid	No bid
18" LF	No bid	No bid	No bid	No bid	No bid
24" LF	No bid	No bid	No bid	No bid	No bid
30" LF	No bid	No bid	No bid	No bid	No bid
36" LF	No bid	No bid	No bid	No bid	No bid
42" LF	No bid	No bid	No bid	No bid	No bid
48" LF	No bid	No bid	No bid	No bid	No bid
54" LF	No bid	No bid	No bid	No bid	No bid
60" LF	No bid	No bid	No bid	No bid	No bid
66" LF	No bid	No bid	No bid	No bid	No bid
72" LF	No bid	No bid	No bid	No bid	No bid
78" LF	No bid	No bid	No bid	No bid	No bid
84" LF	No bid	No bid	No bid	No bid	No bid
90" LF	No bid	No bid	No bid	No bid	No bid
96" LF	No bid	No bid	No bid	No bid	No bid
102"LF	No bid	No bid	No bid	No bid	No bid
108" LF	No bid	No bid	No bid	No bid	No bid
114" LF	No bid	No bid	No bid	No bid	No bid
120" LF	No bid	No bid	No bid	No bid	No bid
126" LF	No bid	No bid	No bid	No bid	No bid
132" LF	No bid	No bid	No bid	No bid	No bid
138" LF	No bid	No bid	No bid	No bid	No bid
144" LF	No bid	No bid	No bid	No bid	No bid

"CONTINUED"
CORRUGATED STEEL STORM SEWER PIPE
NIGP CODE: 210-29 Corrugated Galvanized Metal Pipe
(UNIT PRICE INCLUDES ONE GASKETED BAND CONNECTION FOR EVERY 20 FOOT JOINT)
TYPE "I" PIPE

VENDORS	Rio Valley Pipe LLC d/b/a CAPA	HD Supply Water Works	Act Pipe & Supply	Ferguson Waterworks	Aguaworks Pipe & Supply
12" LF	No bid	No bid	No bid	No bid	No bid
15" LF	No bid	No bid	No bid	No bid	No bid
18" LF	No bid	No bid	No bid	No bid	No bid
24" LF	No bid	No bid	No bid	No bid	No bid
30" LF	No bid	No bid	No bid	No bid	No bid
36" LF	No bid	No bid	No bid	No bid	No bid
42" LF	No bid	No bid	No bid	No bid	No bid
48" LF	No bid	No bid	No bid	No bid	No bid
54" LF	No bid	No bid	No bid	No bid	No bid
60" LF	No bid	No bid	No bid	No bid	No bid
66" LF	No bid	No bid	No bid	No bid	No bid
72" LF	No bid	No bid	No bid	No bid	No bid
78" LF	No bid	No bid	No bid	No bid	No bid
84" LF	No bid	No bid	No bid	No bid	No bid
90" LF	No bid	No bid	No bid	No bid	No bid
96" LF	No bid	No bid	No bid	No bid	No bid
102" LF	No bid	No bid	No bid	No bid	No bid
108" LF	No bid	No bid	No bid	No bid	No bid
114" LF	No bid	No bid	No bid	No bid	No bid
120" LF	No bid	No bid	No bid	No bid	No bid
126" LF	No bid	No bid	No bid	No bid	No bid
132" LF	No bid	No bid	No bid	No bid	No bid
138" LF	No bid	No bid	No bid	No bid	No bid
144" LF	No bid	No bid	No bid	No bid	No bid

"CONTINUED"
CORRUGATED STEEL STORM SEWER PIPE
NIGP CODE: 210-29 Corrugated Galvanized Metal Pipe
(UNIT PRICE INCLUDES ONE GASKETED BAND CONNECTION FOR EVERY 20 FOOT JOINT)
TYPE "IA" PIPE

VENDORS	Rio Valley Pipe LLC d/b/a CAPA	HD Supply Water Works	Act Pipe & Supply	Ferguson Waterworks	Aguaworks Pipe & Supply
12" LF	No bid	No bid	No bid	No bid	No bid
15" LF	No bid	No bid	No bid	No bid	No bid
18" LF	No bid	No bid	No bid	No bid	No bid
24" LF	No bid	No bid	No bid	No bid	No bid
30" LF	No bid	No bid	No bid	No bid	No bid
36" LF	No bid	No bid	No bid	No bid	No bid
42" LF	No bid	No bid	No bid	No bid	No bid
48" LF	No bid	No bid	No bid	No bid	No bid
54" LF	No bid	No bid	No bid	No bid	No bid
60" LF	No bid	No bid	No bid	No bid	No bid
66" LF	No bid	No bid	No bid	No bid	No bid
72" LF	No bid	No bid	No bid	No bid	No bid
78" LF	No bid	No bid	No bid	No bid	No bid
84" LF	No bid	No bid	No bid	No bid	No bid
90" LF	No bid	No bid	No bid	No bid	No bid
96" LF	No bid	No bid	No bid	No bid	No bid
102" LF	No bid	No bid	No bid	No bid	No bid
108" LF	No bid	No bid	No bid	No bid	No bid
114" LF	No bid	No bid	No bid	No bid	No bid
120" LF	No bid	No bid	No bid	No bid	No bid
126" LF	No bid	No bid	No bid	No bid	No bid
132" LF	No bid	No bid	No bid	No bid	No bid
138" LF	No bid	No bid	No bid	No bid	No bid
144" LF	No bid	No bid	No bid	No bid	No bid

TABULATION SHEET
Hidalgo County (All funding sources, programs & entities)
"PIPES & Related Miscellaneous Items"
RFB No.: 2017-046-04-05-FAZ

REINFORCED CONCRETE PIPE – RUBBER GASKET JOINT PIPE

NIGP CODE: 658-68

VENDORS	Rio Valley Pipe LLC d/b/a CAPA			HD Supply Water Works			Act Pipe & Supply			Ferguson Waterworks			Aguaworks Pipe & Supply		
	CLASS III	CLASS IV	CLASS V	CLASS III	CLASS IV	CLASS V	CLASS III	CLASS IV	CLASS V	CLASS III	CLASS IV	CLASS V	CLASS III	CLASS IV	CLASS V
12" LF	15.64	20.10	22.22	17.05	17.05	18.95	No bid	No bid	No bid	No bid	No bid	No bid	No bid	No bid	No bid
15" LF	18.40	23.28	25.39	21.47	24.00	24.00	No bid	No bid	No bid	No bid	No bid	No bid	No bid	No bid	No bid
18" LF	21.16	26.45	28.57	24.63	26.53	29.05	No bid	No bid	No bid	No bid	No bid	No bid	No bid	No bid	No bid
24" LF	29.60	33.86	35.97	34.11	42.32	44.84	No bid	No bid	No bid	No bid	No bid	No bid	No bid	No bid	No bid
30" LF	43.80	47.49	50.91	46.74	56.84	73.89	No bid	No bid	No bid	No bid	No bid	No bid	No bid	No bid	No bid
36" LF	61.85	67.71	72.30	70.11	88.42	104.21	No bid	No bid	No bid	No bid	No bid	No bid	No bid	No bid	No bid
42" LF	82.12	83.05	95.31	93.47	117.47	146.53	No bid	No bid	No bid	No bid	No bid	No bid	No bid	No bid	No bid
48" LF	94.67	104.74	120.41	113.05	146.53	194.53	No bid	No bid	No bid	No bid	No bid	No bid	No bid	No bid	No bid
54" LF	112.78	128.34	146.64	133.26	205.89	223.58	No bid	No bid	No bid	No bid	No bid	No bid	No bid	No bid	No bid
60" LF	141.43	159.51	188.88	168.00	234.32	267.16	No bid	No bid	No bid	No bid	No bid	No bid	No bid	No bid	No bid
72" LF	195.29	225.18	276.28	235.58	298.74	366.95	No bid	No bid	No bid	No bid	No bid	No bid	No bid	No bid	No bid

REINFORCED CONCRETE PIPE – TONGUE & GROOVE PIPE

NIGP CODE: 658-68

VENDORS	Rio Valley Pipe LLC d/b/a CAPA			HD Supply Water Works			Act Pipe & Supply			Ferguson Waterworks			Aguaworks Pipe & Supply		
	CLASS III	CLASS IV	CLASS V	CLASS III	CLASS IV	CLASS V	CLASS III	CLASS IV	CLASS V	CLASS III	CLASS IV	CLASS V	CLASS III	CLASS IV	CLASS V
12" LF	12.88	16.93	18.22	15.05	15.05	17.11	No bid	No bid	No bid	No bid	No bid	No bid	No bid	No bid	No bid
15" LF	15.64	20.10	21.25	16.42	17.11	21.89	No bid	No bid	No bid	No bid	No bid	No bid	No bid	No bid	No bid
18" LF	18.40	23.28	24.29	20.53	21.89	23.95	No bid	No bid	No bid	No bid	No bid	No bid	No bid	No bid	No bid
24" LF	26.00	29.62	30.36	28.74	36.26	37.63	No bid	No bid	No bid	No bid	No bid	No bid	No bid	No bid	No bid
30" LF	39.68	41.45	50.37	40.37	49.26	64.32	No bid	No bid	No bid	No bid	No bid	No bid	No bid	No bid	No bid
36" LF	54.37	60.09	70.57	58.84	68.42	108.79	No bid	No bid	No bid	No bid	No bid	No bid	No bid	No bid	No bid
42" LF	73.98	76.18	85.29	83.47	98.53	152.58	No bid	No bid	No bid	No bid	No bid	No bid	No bid	No bid	No bid
48" LF	93.21	100.10	113.74	99.89	146.42	202.53	No bid	No bid	No bid	No bid	No bid	No bid	No bid	No bid	No bid
54" LF	109.49	121.93	137.07	137.53	202.53	232.63	No bid	No bid	No bid	No bid	No bid	No bid	No bid	No bid	No bid
60" LF	135.22	153.30	174.65	160.11	230.58	279.84	No bid	No bid	No bid	No bid	No bid	No bid	No bid	No bid	No bid
72" LF	195.29	225.18	254.98	230.58	289.42	381.11	No bid	No bid	No bid	No bid	No bid	No bid	No bid	No bid	No bid

REINFORCED POLYTHYLENE PIPE – 20 FOOT JOINTS

NIGP CODE: 658-58

VENDORS	Rio Valley Pipe LLC d/b/a CAPA	HD Supply Water Works	Act Pipe & Supply	Ferguson Waterworks	Aguaworks Pipe & Supply
24" LF	No Bid	No Bid	No bid	No bid	No bid
30" LF	No Bid	No Bid	No bid	No bid	No bid
36" LF	No Bid	No Bid	No bid	No bid	No bid
42" LF	No Bid	No Bid	No bid	No bid	No bid
48" LF	No Bid	No Bid	No bid	No bid	No bid
54" LF	No Bid	No Bid	No bid	No bid	No bid
60" LF	No Bid	No Bid	No bid	No bid	No bid
72" LF	No Bid	No Bid	No bid	No bid	No bid
84" LF	No Bid	No Bid	No bid	No bid	No bid
96" LF	No Bid	No Bid	No bid	No bid	No bid

TABULATION SHEET
Hidalgo County (All funding sources, programs & entities)
"PIPES & Related Miscellaneous Items"
RFB No.: 2017-046-04-05-FAZ

AWWA C900 PVC PLASTIC PRESSURE PIPE

NIGP CODE:658-56 PLASTIC PIPES **OR**
NIGP CODE: 658-60 PVC PIPES

VENDORS	Rio Valley Pipe LLC d/b/a CAPA			HD Supply Water Works			Act Pipe & Supply			Ferguson Waterworks			Aguaworks Pipe & Supply		
	DR 14	DR 18	DR 25	DR 14	DR 18	DR 25	DR 14	DR 18	DR 25	DR 14	DR 18	DR 25	DR 14	DR 18	DR 25
4" LF	No Bid	No Bid	No Bid	2.72	2.13	1.55	2.82	2.21	1.61	2.48	1.94	1.42	No bid	No bid	No bid
6" LF	No Bid	No Bid	No Bid	5.28	4.20	3.06	5.52	4.39	3.20	4.82	3.84	2.79	No bid	No bid	No bid
8" LF	No Bid	No Bid	No Bid	9.07	7.28	5.26	9.48	7.60	5.48	8.28	6.65	4.80	No bid	No bid	No bid
10" LF	No Bid	No Bid	No Bid	13.81	10.94	7.95	14.42	11.42	8.30	12.60	9.98	7.25	No bid	No bid	No bid
12" LF	No Bid	No Bid	No Bid	19.52	15.43	11.24	20.38	16.12	11.73	17.80	14.08	10.25	No bid	No bid	No bid

AWWA C905 PVC PLASTIC WATER PIPE

NIGP CODE: 658-56 PLASTIC PIPES **OR**

NIGP CODE: 658-60 PVC PIPES

VENDORS	Rio Valley Pipe LLC d/b/a CAPA					HD Supply Water Works					Act Pipe & Supply					Ferguson Waterworks					Aguaworks Pipe & Supply				
	DR 18	DR 25	DR 32.5	DR 41	DR 51	DR 18	DR 25	DR 32.5	DR 41	DR 51	DR 18	DR 25	DR 32.5	DR 41	DR 51	DR 18	DR 25	DR 32.5	DR 41	DR 51	DR 18	DR 25	DR 32.5	DR 41	DR 51
14" LF	--	--	--	--	--	27.89	20.53	15.79	13.16	No Bid	--	--	--	--	--	20.58	15.12	--	--	--	--	--	--	--	--
16" LF	--	--	--	--	--	36.32	26.32	20.53	18.42	No Bid	--	--	--	--	--	26.63	19.59	--	--	--	--	--	--	--	--
18" LF	--	--	--	--	--	45.79	33.35	25.79	23.16	No Bid	--	--	--	--	--	33.49	24.77	--	--	--	--	--	--	--	--
24" LF	--	--	--	--	--	80.32	58.95	45.26	41.05	No Bid	--	--	--	--	--	75.11	54.98	--	--	--	--	--	--	--	--
30" LF	--	--	--	--	--	131.58	91.58	70.53	65.26	60.00	--	--	--	--	--	120.13	91.24	--	--	--	--	--	--	--	--
36" LF	--	--	--	--	--	No Bid	131.58	102.11	91.58	82.11	--	--	--	--	--	206.71	150.76	--	--	--	--	--	--	--	--
42" LF	--	--	--	--	--	No Bid	236.84	138.95	123.16	100.00	--	--	--	--	--	No Bid	No Bid	--	--	--	--	--	--	--	--
48" LF	--	--	--	--	--	No Bid	315.79	247.37	230.53	198.95	--	--	--	--	--	No Bid	No Bid	--	--	--	--	--	--	--	--

*-- No Bid *-- No Bid *-- No Bid

TABULATION SHEET
Hidalgo County (All funding sources, programs & entities)
"PIPES & Related Miscellaneous Items"
RFB No.: 2017-046-04-05-FAZ

SDR 26 AND SDR 35 GASKETED GRAVITY SANITARY SEWER PIPE

NIGP CODE: 210-35

SEWER PIPE JOINT SEALING COMPOUND

VENDORS	Rio Valley Pipe LLC d/b/a CAPA		HD Supply Water Works		Act Pipe & Supply		Ferguson Waterworks		Aguaworks Pipe & Supply	
	SDR 26	SDR 35	SDR 26	SDR 35	SDR 26	SDR 35	SDR 26	SDR 35	SDR 26	SDR 35
4" LF	No Bid	No Bid	1.17	.87	1.22	.91	1.07	.80	No Bid	No Bid
6" LF	No Bid	No Bid	2.51	1.89	2.63	1.98	2.28	1.72	No Bid	No Bid
8" LF	No Bid	No Bid	4.52	3.39	4.74	3.55	4.12	3.09	No Bid	No Bid
10" LF	No Bid	No Bid	7.08	5.32	7.42	5.57	6.46	4.84	No Bid	No Bid
12" LF	No Bid	No Bid	10.09	7.63	10.57	8.00	9.20	6.95	No Bid	No Bid
15" LF	No Bid	No Bid	15.34	11.36	16.05	11.89	13.98	10.30	No Bid	No Bid

HIGH PERFORMANCE (HP) POLYPROPYLENE STORM PIPE

VENDORS	Rio Valley Pipe LLC d/b/a CAPA	HD Supply Water Works	Act Pipe & Supply	Ferguson Waterworks	Aguaworks Pipe & Supply
12" LF	No Bid	7.26	7.27	8.15	7.27
15" LF	No Bid	9.07	9.07	10.17	9.07
18" LF	No Bid	11.96	11.97	13.42	11.97
24" LF	No Bid	20.18	20.19	22.25	20.18
30" LF	No Bid	31.39	31.39	34.60	31.39
36" LF	No Bid	36.34	36.34	40.06	36.34
42" LF	No Bid	46.64	46.65	51.42	46.64
48" LF	No Bid	61.16	61.16	67.42	61.16
60" LF	No Bid	95.86	95.87	105.67	95.87

HIGH DESTINY POLYETHYLENE PIPE (HDPE)

NIGP CODE: 658-58 Polyethylene Pipe And Fitting

VENDORS	Rio Valley Pipe LLC d/b/a CAPA	HD Supply Water Works	Act Pipe & Supply	Ferguson Waterworks	Aguaworks Pipe & Supply
4"LF	No Bid	.93	.94	1.07	.94
6"LF	No Bid	2.32	2.33	2.66	2.33
8"LF	No Bid	3.84	3.85	4.39	3.85
10"LF	No Bid	5.40	5.40	6.17	5.40
12"LF	No Bid	5.58	5.59	6.17	5.59
15"LF	No Bid	8.54	8.55	9.42	8.55
18"LF	No Bid	11.60	11.61	12.80	11.61
24"LF	No Bid	18.00	18.00	19.84	18.00
30"LF	No Bid	27.75	27.75	30.59	27.75
36"LF	No Bid	34.91	34.92	38.49	34.92
42"LF	No Bid	48.57	48.58	53.55	48.58
48"LF	No Bid	53.86	53.87	59.58	53.87
54"LF	No Bid	No Bid	No Bid	No Bid	No Bid
60"LF	No Bid	93.13	93.13	102.60	93.13

PLUMBING PIPES – 20 FOOT SECTIONS NIGP CODE: 967-60 PVC					
VENDORS	Rio Valley Pipe LLC d/b/a CAPA	HD Supply Water Works	Act Pipe & Supply	Ferguson Waterworks	Aguaworks Pipe & Supply
½"	No Bid	.40	No Bid	2.80	No Bid
1 ½"	No Bid	.75	No Bid	9.20	No Bid
2"	No Bid	.95	No Bid	11.60	No Bid
3"	No Bid	1.50	No Bid	23.80	No Bid
4"	No Bid	2.25	No Bid	37.80	No Bid

PLUMBING PIPES – 20 FOOT SECTIONS NIGP CODE: 967-60 COPPER					
VENDORS	Rio Valley Pipe LLC d/b/a CAPA	HD Supply Water Works	Act Pipe & Supply	Ferguson Waterworks	Aguaworks Pipe & Supply
½"	No Bid	No Bid	No Bid	35.00	No Bid
¾"	No Bid	No Bid	No Bid	62.60	No Bid

CATEGORY (B) – INLETS

NIGP CODE: 210-31

INLETS, AREA, SEWER DRAIN, PRECAST, CONCRETE, STORM DRAIN, **NO BOTTOM FLOORS**

DESCRIPTION		Rio Valley Pipe LLC d/b/a CAPA	HD Supply Water Works	Act Pipe & Supply	Ferguson Waterworks	Aguaworks Pipe & Supply
Type "A" Inlet (5' x 3')	2'	No Bid	No Bid	No Bid	915.00	No Bid
	2 ½'	904.14	No Bid	No Bid	981.00	No Bid
	3'	908.98	No Bid	No Bid	1,025.00	No Bid
	3 ½'	928.50	No Bid	No Bid	1,092.00	No Bid
	4'	968.58	No Bid	No Bid	1,136.00	No Bid
	4 ½'	1,023.16	No Bid	No Bid	1,203.00	No Bid
	5'	1,079.06	No Bid	No Bid	1,247.00	No Bid
	5 ½'	1,143.25	No Bid	No Bid	1,314.00	No Bid
	6'	1,224.10	No Bid	No Bid	1,358.00	No Bid
	6 ½'	1,293.84	No Bid	No Bid	1,425.00	No Bid
	7'	1,363.59	No Bid	No Bid	1,469.00	No Bid
	7 ½'	1,430.57	No Bid	No Bid	1,481.00	No Bid
	8'	1,483.68	No Bid	No Bid	1,581.00	No Bid
	8 ½'	1,501.12	No Bid	No Bid	1,647.00	No Bid
	9'	1,516.34	No Bid	No Bid	1,691.00	No Bid
	9 ½'	1,570.92	No Bid	No Bid	1,758.00	No Bid
	10'	1,626.82	No Bid	No Bid	1,803.00	No Bid
Type "A-1" Inlet (5' x 4')	2'	No Bid	No Bid	No Bid	No Bid	No Bid
	2 ½'	No Bid	No Bid	No Bid	No Bid	No Bid
	3'	No Bid	No Bid	No Bid	No Bid	No Bid
	3 ½'	No Bid	No Bid	No Bid	No Bid	No Bid
	4'	No Bid	No Bid	No Bid	No Bid	No Bid
	4 ½'	No Bid	No Bid	No Bid	No Bid	No Bid
	5'	No Bid	No Bid	No Bid	No Bid	No Bid
	5 ½'	No Bid	No Bid	No Bid	No Bid	No Bid
	6'	No Bid	No Bid	No Bid	No Bid	No Bid
	6 ½'	No Bid	No Bid	No Bid	No Bid	No Bid
	7'	No Bid	No Bid	No Bid	No Bid	No Bid
	7 ½'	No Bid	No Bid	No Bid	No Bid	No Bid
	8'	No Bid	No Bid	No Bid	No Bid	No Bid
	8 ½'	No Bid	No Bid	No Bid	No Bid	No Bid
	9'	No Bid	No Bid	No Bid	No Bid	No Bid
	9 ½'	No Bid	No Bid	No Bid	No Bid	No Bid
	10'	No Bid	No Bid	No Bid	No Bid	No Bid
Type "A-2" Inlet (5' x 5')	2'	No Bid	No Bid	No Bid	995.00	No Bid
	2 ½'	No Bid	No Bid	No Bid	1,076.00	No Bid
	3'	No Bid	No Bid	No Bid	1,140.00	No Bid
	3 ½'	No Bid	No Bid	No Bid	1,212.00	No Bid
	4'	No Bid	No Bid	No Bid	1,267.00	No Bid
	4 ½'	No Bid	No Bid	No Bid	1,347.00	No Bid
	5'	No Bid	No Bid	No Bid	1,402.00	No Bid
	5 ½'	No Bid	No Bid	No Bid	1,484.00	No Bid
	6'	No Bid	No Bid	No Bid	1,538.00	No Bid
	6 ½'	No Bid	No Bid	No Bid	1,620.00	No Bid
	7'	No Bid	No Bid	No Bid	1,675.00	No Bid
	7 ½'	No Bid	No Bid	No Bid	1,756.00	No Bid
	8'	No Bid	No Bid	No Bid	1,810.00	No Bid

	8 ½'	No Bid	No Bid	No Bid	1,893.00	No Bid
	9'	No Bid	No Bid	No Bid	1,945.00	No Bid
	9 ½'	No Bid	No Bid	No Bid	2,026.00	No Bid
	10'	No Bid	No Bid	No Bid	2,083.00	No Bid
Type "A-3" Inlet (5' x 6')	2'	No Bid	No Bid	No Bid	No Bid	No Bid
	2 ½'	No Bid	No Bid	No Bid	No Bid	No Bid
	3'	No Bid	No Bid	No Bid	No Bid	No Bid
	3 ½'	No Bid	No Bid	No Bid	No Bid	No Bid
	4'	No Bid	No Bid	No Bid	No Bid	No Bid
	4 ½'	No Bid	No Bid	No Bid	No Bid	No Bid
	5'	No Bid	No Bid	No Bid	No Bid	No Bid
	5 ½'	No Bid	No Bid	No Bid	No Bid	No Bid
	6'	No Bid	No Bid	No Bid	No Bid	No Bid
	6 ½'	No Bid	No Bid	No Bid	No Bid	No Bid
	7'	No Bid	No Bid	No Bid	No Bid	No Bid
	7 ½'	No Bid	No Bid	No Bid	No Bid	No Bid
	8'	No Bid	No Bid	No Bid	No Bid	No Bid
	8 ½'	No Bid	No Bid	No Bid	No Bid	No Bid
	9'	No Bid	No Bid	No Bid	No Bid	No Bid
	9 ½'	No Bid	No Bid	No Bid	No Bid	No Bid
	10'	No Bid	No Bid	No Bid	No Bid	No Bid
Type "A" (SPL-1) Inlet (5' x 3')	2'	No Bid	No Bid	No Bid	No Bid	No Bid
	2 ½'	No Bid	No Bid	No Bid	No Bid	No Bid
	3'	No Bid	No Bid	No Bid	No Bid	No Bid
	3 ½'	No Bid	No Bid	No Bid	No Bid	No Bid
	4'	No Bid	No Bid	No Bid	No Bid	No Bid
	4 ½'	No Bid	No Bid	No Bid	No Bid	No Bid
	5'	No Bid	No Bid	No Bid	No Bid	No Bid
	5 ½'	No Bid	No Bid	No Bid	No Bid	No Bid
	6'	No Bid	No Bid	No Bid	No Bid	No Bid
	6 ½'	No Bid	No Bid	No Bid	No Bid	No Bid
	7'	No Bid	No Bid	No Bid	No Bid	No Bid
	7 ½'	No Bid	No Bid	No Bid	No Bid	No Bid
	8'	No Bid	No Bid	No Bid	No Bid	No Bid
	8 ½'	No Bid	No Bid	No Bid	No Bid	No Bid
	9'	No Bid	No Bid	No Bid	No Bid	No Bid
	9 ½'	No Bid	No Bid	No Bid	No Bid	No Bid
	10'	No Bid	No Bid	No Bid	No Bid	No Bid
Type "A-1" (SPL-1) Inlet (5' x 4')	2'	No Bid	No Bid	No Bid	No Bid	No Bid
	2 ½'	No Bid	No Bid	No Bid	No Bid	No Bid
	3'	No Bid	No Bid	No Bid	No Bid	No Bid
	3 ½'	No Bid	No Bid	No Bid	No Bid	No Bid
	4'	No Bid	No Bid	No Bid	No Bid	No Bid
	4 ½'	No Bid	No Bid	No Bid	No Bid	No Bid
	5'	No Bid	No Bid	No Bid	No Bid	No Bid
	5 ½'	No Bid	No Bid	No Bid	No Bid	No Bid
	6'	No Bid	No Bid	No Bid	No Bid	No Bid

	6 ½'	No Bid	No Bid	No Bid	No Bid	No Bid
	7'	No Bid	No Bid	No Bid	No Bid	No Bid
	7 ½'	No Bid	No Bid	No Bid	No Bid	No Bid
	8'	No Bid	No Bid	No Bid	No Bid	No Bid
	8 ½'	No Bid	No Bid	No Bid	No Bid	No Bid
	9'	No Bid	No Bid	No Bid	No Bid	No Bid
	9 ½'	No Bid	No Bid	No Bid	No Bid	No Bid
	10'	No Bid	No Bid	No Bid	No Bid	No Bid
Type "A-2" (SPL-1) Inlet (5' x 5')	2'	No Bid	3,538.68	No Bid	No Bid	No Bid
	2 ½'	No Bid	3,538.68	No Bid	No Bid	No Bid
	3'	No Bid	3,538.68	No Bid	No Bid	No Bid
	3 ½'	No Bid	3,538.68	No Bid	No Bid	No Bid
	4'	No Bid	3,538.68	No Bid	No Bid	No Bid
	4 ½'	No Bid	3,538.68	No Bid	No Bid	No Bid
	5'	No Bid	3,538.68	No Bid	No Bid	No Bid
	5 ½'	No Bid	3,628.61	No Bid	No Bid	No Bid
	6'	No Bid	3,718.54	No Bid	No Bid	No Bid
	6 ½'	No Bid	3,808.46	No Bid	No Bid	No Bid
	7'	No Bid	3,898.39	No Bid	No Bid	No Bid
	7 ½'	No Bid	3,988.32	No Bid	No Bid	No Bid
	8'	No Bid	4,078.24	No Bid	No Bid	No Bid
	8 ½'	No Bid	4,168.17	No Bid	No Bid	No Bid
	9'	No Bid	4,258.09	No Bid	No Bid	No Bid
	9 ½'	No Bid	4,348.02	No Bid	No Bid	No Bid
	10'	No Bid	4,437.95	No Bid	No Bid	No Bid
Type "A-3" (SPL-1) Inlet (5' x 6')	2'	No Bid	No Bid	No Bid	No Bid	No Bid
	2 ½'	No Bid	No Bid	No Bid	No Bid	No Bid
	3'	No Bid	No Bid	No Bid	No Bid	No Bid
	3 ½'	No Bid	No Bid	No Bid	No Bid	No Bid
	4'	No Bid	No Bid	No Bid	No Bid	No Bid
	4 ½'	No Bid	No Bid	No Bid	No Bid	No Bid
	5'	No Bid	No Bid	No Bid	No Bid	No Bid
	5 ½'	No Bid	No Bid	No Bid	No Bid	No Bid
	6'	No Bid	No Bid	No Bid	No Bid	No Bid
	6 ½'	No Bid	No Bid	No Bid	No Bid	No Bid
	7'	No Bid	No Bid	No Bid	No Bid	No Bid
	7 ½'	No Bid	No Bid	No Bid	No Bid	No Bid
	8'	No Bid	No Bid	No Bid	No Bid	No Bid
	8 ½'	No Bid	No Bid	No Bid	No Bid	No Bid
	9'	No Bid	No Bid	No Bid	No Bid	No Bid
	9 ½'	No Bid	No Bid	No Bid	No Bid	No Bid
	10'	No Bid	No Bid	No Bid	No Bid	No Bid
TYPE "C" Inlet (2' X 2')	2'	No Bid	442.89	No Bid	412.00	No Bid
	2 ½'	640.02	484.51	No Bid	478.00	No Bid
	3'	696.79	526.12	No Bid	468.00	No Bid

	3 ½'	753.57	567.73	No Bid	700.00	No Bid
	4'	806.78	609.34	No Bid	728.00	No Bid
	4 ½'	863.57	650.95	No Bid	850.00	No Bid
	5'	916.78	692.56	No Bid	895.00	No Bid
	5 ½'	973.56	734.17	No Bid	962.00	No Bid
	6'	1,026.77	775.78	No Bid	1,006.00	No Bid
	6 ½'	1,090.67	817.39	No Bid	1,128.00	No Bid
	7'	1,136.77	859.00	No Bid	1,173.00	No Bid
	7 ½'	1,193.55	900.61	No Bid	1,295.00	No Bid
	8'	1,246.76	942.22	No Bid	1,339.00	No Bid
	8 ½'	1,303.55	983.83	No Bid	1,462.00	No Bid
	9'	1,356.76	1,025.44	No Bid	1,512.00	No Bid
	9 ½'	1,413.55	1,067.05	No Bid	1,634.00	No Bid
	10'	1,466.76	1,108.66	No Bid	1,673.00	No Bid
TYPE "C" Inlet (3' X 3')	2'	No Bid	1,043.26	No Bid	784.00	No Bid
	2 ½'	829.80	1,043.26	No Bid	815.00	No Bid
	3'	901.51	1,043.26	No Bid	946.00	No Bid
	3 ½'	973.21	1,098.74	No Bid	1,076.00	No Bid
	4'	1,044.91	1,154.21	No Bid	1,090.00	No Bid
	4 ½'	1,116.61	1,209.68	No Bid	1,220.00	No Bid
	5'	1,188.31	1,265.16	No Bid	1,252.00	No Bid
	5 ½'	1,260.01	1,320.63	No Bid	1,382.00	No Bid
	6'	1,331.71	1,376.11	No Bid	1,414.00	No Bid
	6 ½'	1,403.41	1,431.58	No Bid	1,544.00	No Bid
	7'	1,475.11	1,487.05	No Bid	1,576.00	No Bid
	7 ½'	1,546.81	1,542.53	No Bid	1,699.00	No Bid
	8'	1,618.51	1,598.00	No Bid	1,738.00	No Bid
	8 ½'	1,690.22	1,653.47	No Bid	1,868.00	No Bid
	9'	1,761.92	1,708.95	No Bid	1,900.00	No Bid
	9 ½'	1,833.62	1,765.42	No Bid	2,030.00	No Bid
	10'	1,905.32	1,819.89	No Bid	2,062.00	No Bid
TYPE "C" Inlet (4' X 4')	2'	No Bid	1,690.16	No Bid	1,022.00	No Bid
	2 ½'	1,136.62	1,690.16	No Bid	1,076.00	No Bid
	3'	1,240.17	1,690.16	No Bid	1,270.00	No Bid
	3 ½'	1,347.26	1,690.16	No Bid	1,324.00	No Bid
	4'	1,450.81	1,690.16	No Bid	1,517.00	No Bid
	4 ½'	1,554.35	1,690.16	No Bid	1,711.00	No Bid
	5'	1,661.45	1,764.42	No Bid	1,765.00	No Bid
	5 ½'	1,764.99	1,838.68	No Bid	1,958.00	No Bid
	6'	1,868.53	1,987.21	No Bid	2,012.00	No Bid
	6 ½'	1,972.07	2,061.47	No Bid	2,206.00	No Bid
	7'	2,079.17	2,135.74	No Bid	2,260.00	No Bid
	7 ½'	2,182.71	2,210.00	No Bid	2,453.00	No Bid
	8'	2,286.26	2,284.26	No Bid	2,507.00	No Bid

	8 ½'	2,396.91	2,358.53	No Bid	2,701.00	No Bid
	9'	2,500.46	2,432.79	No Bid	2,755.00	No Bid
	9 ½'	2,604.00	2,507.05	No Bid	2,948.00	No Bid
	10'	2,711.10	2,581.32	No Bid	3,002.00	No Bid
TYPE "CC" Inlet (5' x 3')	2'	No Bid	1,082.63	No Bid	1,144.00	No Bid
	2 ½'	1,262.14	1,082.63	No Bid	1,180.00	No Bid
	3'	1,267.29	1,082.63	No Bid	1,360.00	No Bid
	3 ½'	1,288.03	1,082.63	No Bid	1,396.00	No Bid
	4'	1,303.28	1,082.63	No Bid	1,526.00	No Bid
	4 ½'	1,357.86	1,175.26	No Bid	1,756.00	No Bid
	5'	1,413.76	1,266.95	No Bid	1,792.00	No Bid
	5 ½'	1,477.95	1,359.11	No Bid	1,972.00	No Bid
	6'	1,558.80	1,451.26	No Bid	2,008.00	No Bid
	6 ½'	1,628.54	1,543.42	No Bid	2,188.00	No Bid
	7'	1,698.29	1,635.58	No Bid	2,224.00	No Bid
	7 ½'	1,765.27	1,727.74	No Bid	2,404.00	No Bid
	8'	1,818.38	1,819.89	No Bid	2,440.00	No Bid
	8 ½'	1,835.79	1,912.05	No Bid	2,620.00	No Bid
	9'	1,851.04	2,004.21	No Bid	2,656.00	No Bid
	9 ½'	1,905.62	2,096.37	No Bid	2,836.00	No Bid
	10'	1,961.52	2,188.53	No Bid	2,872.00	No Bid
Type "F" Inlet (W=3')	2'	No Bid	No Bid	No Bid	No Bid	No Bid
	2 ½'	No Bid	No Bid	No Bid	No Bid	No Bid
	3'	No Bid	No Bid	No Bid	2,035.00	No Bid
	3 ½'	No Bid	No Bid	No Bid	2,220.00	No Bid
	4'	No Bid	No Bid	No Bid	2,300.00	No Bid
	4 ½'	No Bid	No Bid	No Bid	2,485.00	No Bid
	5'	No Bid	No Bid	No Bid	2,565.00	No Bid
	5 ½'	No Bid	No Bid	No Bid	2,750.00	No Bid
	6'	No Bid	No Bid	No Bid	2,830.00	No Bid
	6 ½'	No Bid	No Bid	No Bid	3,015.00	No Bid
	7'	No Bid	No Bid	No Bid	3,095.00	No Bid
	7 ½'	No Bid	No Bid	No Bid	3,280.00	No Bid
	8'	No Bid	No Bid	No Bid	3,360.00	No Bid
	8 ½'	No Bid	No Bid	No Bid	3,545.00	No Bid
	9'	No Bid	No Bid	No Bid	3,625.00	No Bid
	9 ½'	No Bid	No Bid	No Bid	3,810.00	No Bid
	10'	No Bid	No Bid	No Bid	3,940.00	No Bid
Type "F-1" Inlet (W=4')	2'	No Bid	No Bid	No Bid	No Bid	No Bid
	2 ½'	No Bid	No Bid	No Bid	No Bid	No Bid
	3'	No Bid	No Bid	No Bid	No Bid	No Bid
	3 ½'	No Bid	No Bid	No Bid	No Bid	No Bid
	4'	No Bid	No Bid	No Bid	No Bid	No Bid
	4 ½'	No Bid	No Bid	No Bid	No Bid	No Bid

	5'	No Bid	No Bid	No Bid	No Bid	No Bid
	5 ½'	No Bid	No Bid	No Bid	No Bid	No Bid
	6'	No Bid	No Bid	No Bid	No Bid	No Bid
	6 ½'	No Bid	No Bid	No Bid	No Bid	No Bid
	7'	No Bid	No Bid	No Bid	No Bid	No Bid
	7 ½'	No Bid	No Bid	No Bid	No Bid	No Bid
	8'	No Bid	No Bid	No Bid	No Bid	No Bid
	8 ½'	No Bid	No Bid	No Bid	No Bid	No Bid
	9'	No Bid	No Bid	No Bid	No Bid	No Bid
	9 ½'	No Bid	No Bid	No Bid	No Bid	No Bid
	10'	No Bid	No Bid	No Bid	No Bid	No Bid
Type "F-2" Inlet (W=5')	2'	No Bid	No Bid	No Bid	No Bid	No Bid
	2 ½'	No Bid	No Bid	No Bid	No Bid	No Bid
	3'	No Bid	No Bid	No Bid	No Bid	No Bid
	3 ½'	No Bid	No Bid	No Bid	No Bid	No Bid
	4'	No Bid	No Bid	No Bid	No Bid	No Bid
	4 ½'	No Bid	No Bid	No Bid	No Bid	No Bid
	5'	No Bid	No Bid	No Bid	No Bid	No Bid
	5 ½'	No Bid	No Bid	No Bid	No Bid	No Bid
	6'	No Bid	No Bid	No Bid	No Bid	No Bid
	6 ½'	No Bid	No Bid	No Bid	No Bid	No Bid
	7'	No Bid	No Bid	No Bid	No Bid	No Bid
	7 ½'	No Bid	No Bid	No Bid	No Bid	No Bid
	8'	No Bid	No Bid	No Bid	No Bid	No Bid
	8 ½'	No Bid	No Bid	No Bid	No Bid	No Bid
	9'	No Bid	No Bid	No Bid	No Bid	No Bid
	9 ½'	No Bid	No Bid	No Bid	No Bid	No Bid
	10'	No Bid	No Bid	No Bid	No Bid	No Bid
Type "F-3" Inlet (W=6')	2'	No Bid	No Bid	No Bid	No Bid	No Bid
	2 ½'	No Bid	No Bid	No Bid	No Bid	No Bid
	3'	No Bid	No Bid	No Bid	No Bid	No Bid
	3 ½'	No Bid	No Bid	No Bid	No Bid	No Bid
	4'	No Bid	No Bid	No Bid	No Bid	No Bid
	4 ½'	No Bid	No Bid	No Bid	No Bid	No Bid
	5'	No Bid	No Bid	No Bid	No Bid	No Bid
	5 ½'	No Bid	No Bid	No Bid	No Bid	No Bid
	6'	No Bid	No Bid	No Bid	No Bid	No Bid
	6 ½'	No Bid	No Bid	No Bid	No Bid	No Bid
	7'	No Bid	No Bid	No Bid	No Bid	No Bid
	7 ½'	No Bid	No Bid	No Bid	No Bid	No Bid
	8'	No Bid	No Bid	No Bid	No Bid	No Bid
	8 ½'	No Bid	No Bid	No Bid	No Bid	No Bid
	9'	No Bid	No Bid	No Bid	No Bid	No Bid

	9 ½'	No Bid	No Bid	No Bid	No Bid	No Bid
	10'	No Bid	No Bid	No Bid	No Bid	No Bid
Type "F" (SPL-1) Inlet (W=3')	2'	No Bid	No Bid	No Bid	No Bid	No Bid
	2 ½'	No Bid	No Bid	No Bid	No Bid	No Bid
	3'	No Bid	No Bid	No Bid	No Bid	No Bid
	3 ½'	No Bid	No Bid	No Bid	No Bid	No Bid
	4'	No Bid	No Bid	No Bid	No Bid	No Bid
	4 ½'	No Bid	No Bid	No Bid	No Bid	No Bid
	5'	No Bid	No Bid	No Bid	No Bid	No Bid
	5 ½'	No Bid	No Bid	No Bid	No Bid	No Bid
	6'	No Bid	No Bid	No Bid	No Bid	No Bid
	6 ½'	No Bid	No Bid	No Bid	No Bid	No Bid
	7'	No Bid	No Bid	No Bid	No Bid	No Bid
	7 ½'	No Bid	No Bid	No Bid	No Bid	No Bid
	8'	No Bid	No Bid	No Bid	No Bid	No Bid
	8 ½'	No Bid	No Bid	No Bid	No Bid	No Bid
	9'	No Bid	No Bid	No Bid	No Bid	No Bid
	9 ½'	No Bid	No Bid	No Bid	No Bid	No Bid
	10'	No Bid	No Bid	No Bid	No Bid	No Bid
Type "F-1" (SPL-1) Inlet (W=4')	2'	No Bid	No Bid	No Bid	No Bid	No Bid
	2 ½'	No Bid	No Bid	No Bid	No Bid	No Bid
	3'	No Bid	No Bid	No Bid	No Bid	No Bid
	3 ½'	No Bid	No Bid	No Bid	No Bid	No Bid
	4'	No Bid	No Bid	No Bid	No Bid	No Bid
	4 ½'	No Bid	No Bid	No Bid	No Bid	No Bid
	5'	No Bid	No Bid	No Bid	No Bid	No Bid
	5 ½'	No Bid	No Bid	No Bid	No Bid	No Bid
	6'	No Bid	No Bid	No Bid	No Bid	No Bid
	6 ½'	No Bid	No Bid	No Bid	No Bid	No Bid
	7'	No Bid	No Bid	No Bid	No Bid	No Bid
	7 ½'	No Bid	No Bid	No Bid	No Bid	No Bid
	8'	No Bid	No Bid	No Bid	No Bid	No Bid
	8 ½'	No Bid	No Bid	No Bid	No Bid	No Bid
	9'	No Bid	No Bid	No Bid	No Bid	No Bid
	9 ½'	No Bid	No Bid	No Bid	No Bid	No Bid
	10'	No Bid	No Bid	No Bid	No Bid	No Bid
Type "F-2" (SPL-1) Inlet (W=5')	2'	No Bid	No Bid	No Bid	No Bid	No Bid
	2 ½'	No Bid	No Bid	No Bid	No Bid	No Bid
	3'	No Bid	No Bid	No Bid	No Bid	No Bid
	3 ½'	No Bid	No Bid	No Bid	No Bid	No Bid
	4'	No Bid	No Bid	No Bid	No Bid	No Bid
	4 ½'	No Bid	No Bid	No Bid	No Bid	No Bid
	5'	No Bid	No Bid	No Bid	No Bid	No Bid
	5 ½'	No Bid	No Bid	No Bid	No Bid	No Bid
	6'	No Bid	No Bid	No Bid	No Bid	No Bid
	6 ½'	No Bid	No Bid	No Bid	No Bid	No Bid

	7'	No Bid	No Bid	No Bid	No Bid	No Bid
	7 ½'	No Bid	No Bid	No Bid	No Bid	No Bid
	8'	No Bid	No Bid	No Bid	No Bid	No Bid
	8 ½'	No Bid	No Bid	No Bid	No Bid	No Bid
	9'	No Bid	No Bid	No Bid	No Bid	No Bid
	9 ½'	No Bid	No Bid	No Bid	No Bid	No Bid
	10'	No Bid	No Bid	No Bid	No Bid	No Bid
Type "F-3" (SPL-1) Inlet (W=6')	2'	No Bid	No Bid	No Bid	No Bid	No Bid
	2 ½'	No Bid	No Bid	No Bid	No Bid	No Bid
	3'	No Bid	No Bid	No Bid	No Bid	No Bid
	3 ½'	No Bid	No Bid	No Bid	No Bid	No Bid
	4'	No Bid	No Bid	No Bid	No Bid	No Bid
	4 ½'	No Bid	No Bid	No Bid	No Bid	No Bid
	5'	No Bid	No Bid	No Bid	No Bid	No Bid
	5 ½	No Bid	No Bid	No Bid	No Bid	No Bid
	6'	No Bid	No Bid	No Bid	No Bid	No Bid
	6 ½'	No Bid	No Bid	No Bid	No Bid	No Bid
	7'	No Bid	No Bid	No Bid	No Bid	No Bid
	7 ½'	No Bid	No Bid	No Bid	No Bid	No Bid
	8'	No Bid	No Bid	No Bid	No Bid	No Bid
	8 ½'	No Bid	No Bid	No Bid	No Bid	No Bid
	9'	No Bid	No Bid	No Bid	No Bid	No Bid
	9 ½'	No Bid	No Bid	No Bid	No Bid	No Bid
	10'	No Bid	No Bid	No Bid	No Bid	No Bid

CATEGORY (C) – MANHOLES, NO BOTTOM FLOORS

DESCRIPTION		VENDORS / PRICE				
		Rio Valley Pipe LLC d/b/a CAPA	HD Supply Water Works	Act Pipe & Supply	Ferguson Waterworks	Aguaworks Pipe & Supply
TYPE "A" MANHOLE	3'		845.20	No Bid	945.00	No Bid
	3 ½'		845.20	No Bid	1,012.00	No Bid
	4'		886.06	No Bid	1,056.00	No Bid
	4 ½'		926.78	No Bid	1,123.00	No Bid
	5'		967.49	No Bid	1,167.00	No Bid
	5 ½'		1,008.21	No Bid	1,234.00	No Bid
	6'		1,048.93	No Bid	1,278.00	No Bid
	6 ½'		1,089.64	No Bid	1,345.00	No Bid
	7'		1,130.36	No Bid	1,389.00	No Bid
	7 ½'		1,171.07	No Bid	1,456.00	No Bid
	8'		1,211.79	No Bid	1,500.00	No Bid
	8 ½'		1,252.51	No Bid	1,567.00	No Bid
	9'		1,293.22	No Bid	1,612.00	No Bid
	9 ½'		1,333.94	No Bid	1,678.00	No Bid
	10'		1,374.65	No Bid	1,723.00	No Bid
TYPE "A-1" MANHOLE	3'	596.40	No Bid	No Bid	No Bid	No Bid
	3 ½'	650.40	No Bid	No Bid	No Bid	No Bid
	4'	703.55	No Bid	No Bid	No Bid	No Bid
	4 ½'	739.55	No Bid	No Bid	No Bid	No Bid
	5'	789.20	No Bid	No Bid	No Bid	No Bid
	5 ½'	825.20	No Bid	No Bid	No Bid	No Bid
	6'	881.80	No Bid	No Bid	No Bid	No Bid
	6 ½'	917.80	No Bid	No Bid	No Bid	No Bid
	7'	970.90	No Bid	No Bid	No Bid	No Bid
	7 ½'	1,006.90	No Bid	No Bid	No Bid	No Bid
	8'	1,060.05	No Bid	No Bid	No Bid	No Bid
	8 ½'	1,096.05	No Bid	No Bid	No Bid	No Bid
	9'	1,145.70	No Bid	No Bid	No Bid	No Bid
	9 ½'	1,181.70	No Bid	No Bid	No Bid	No Bid
	10'	1,288.30	No Bid	No Bid	No Bid	No Bid
TYPE "M" MANHOLE	3'	No Bid	No Bid	No Bid	No Bid	No Bid
	3 ½'	No Bid	No Bid	No Bid	No Bid	No Bid
	4'	No Bid	No Bid	No Bid	No Bid	No Bid
	4 ½'	No Bid	No Bid	No Bid	No Bid	No Bid
	5'	No Bid	No Bid	No Bid	No Bid	No Bid
	5 ½'	No Bid	No Bid	No Bid	No Bid	No Bid
	6'	No Bid	No Bid	No Bid	No Bid	No Bid
	6 ½'	No Bid	No Bid	No Bid	No Bid	No Bid
	7'	No Bid	No Bid	No Bid	No Bid	No Bid
	7 ½'	No Bid	No Bid	No Bid	No Bid	No Bid
	8'	No Bid	No Bid	No Bid	No Bid	No Bid
	8 ½'	No Bid	No Bid	No Bid	No Bid	No Bid
	9'	No Bid	No Bid	No Bid	No Bid	No Bid
	9 ½'	No Bid	No Bid	No Bid	No Bid	No Bid
	10'	No Bid	No Bid	No Bid	No Bid	No Bid

CATEGORY (D) – MISCELLANEOUS

DESCRIPTION					
Vendors	Rio Valley Pipe LLC d/b/a CAPA	HD Supply Water Works	Act Pipe & Supply	Ferguson Waterworks	Aguaworks Pipe & Supply
WATER VALVE					
2" ea.	No Bid	295.00	353.40	210.00	No Bid
4" ea.	No Bid	576.00	453.38	350.00	No Bid
6" ea.	No Bid	770.00	578.54	440.00	No Bid
8" ea.	No Bid	995.00	921.48	698.00	No Bid
10" ea.	No Bid	1,440.00	1,436.85	1,160.00	No Bid
90 DEGREE ELBOW					
2" ea.	No Bid	92.10	No Bid	16.54	No Bid
4" ea.	No Bid	140.00	No Bid	30.34	No Bid
6" ea.	No Bid	160.00	No Bid	49.61	No Bid
8" ea.	No Bid	270.00	No Bid	72.16	No Bid
10" ea.	No Bid	350.00	No Bid	114.80	No Bid
45 DEGREE ELBOW					
2" ea.	No Bid	105.10	No Bid	16.54	No Bid
4" ea.	No Bid	147.50	No Bid	25.01	No Bid
6" ea.	No Bid	160.00	No Bid	40.18	No Bid
8" ea.	No Bid	270.00	No Bid	58.63	No Bid
10" ea.	No Bid	350.00	No Bid	85.69	No Bid
STEEL PIPE CASING WITH SPACERS					
4" lf	No Bid	61.11	No Bid	5.95	No Bid
6" lf	No Bid	83.85	No Bid	12.50	No Bid
12" lf	No Bid	98.57	No Bid	26.00	No Bid
16" lf	No Bid	128.66	No Bid	35.00	No Bid
24" lf	No Bid	190.20	No Bid	49.00	No Bid
FIRE HYDRANT W/VALVE ea.	No Bid	2,495.00	No Bid	2,080.00	No Bid
PVC SCHEDULE 40 WATER LINE DR 18					
2" lf	No Bid	.85	No Bid	.58	No Bid
8" lf	No Bid	7.40	No Bid	6.65	No Bid
PVC SCHEDULE 40					
1.5" lf	No Bid	.65	No Bid	.46	No Bid
0.75"lf	No Bid	.45	No Bid	.23	No Bid
0.5"lf	No Bid	No Bid	No Bid	.15	No Bid
WATER SADDLE W/2' CORPORATE VALVE					
8" x 2" ea.	No Bid	470.00	358.83	307.75	No Bid

HP Dual Wall Marmac Couplers					
Vendor	Rio Valley Pipe LLC d/b/a CAPA	HD Supply Water Works	Act Pipe & Supply	Ferguson Waterworks	Aguaworks Pipe & Supply
PIPE SIZE					
12" ea.	No Bid	46.00	43.44	47.11	No Bid
15" ea.	No Bid	52.11	49.22	53.38	No Bid
18" ea.	No Bid	64.11	60.56	65.66	No Bid
24" ea.	No Bid	82.94	78.33	86.94	No Bid
30" ea.	No Bid	101.23	95.61	103.67	No Bid
36" ea.	No Bid	118.45	111.88	121.31	No Bid
42" ea.	No Bid	131.90	124.58	135.08	No Bid
48" ea.	No Bid	145.97	137.87	149.50	No Bid
60"ea.	No Bid	239.61	225.86	244.90	No Bid

HP Dual Wall Fabricated Tees					
Vendor	Rio Valley Pipe LLC d/b/a CAPA	HD Supply Water Works	Act Pipe & Supply	Ferguson Waterworks	Aguaworks Pipe & Supply
PIPE SIZE					
12" ea.	No Bid	174.29	164.61	177.42	No Bid
15" ea.	No Bid	260.51	246.04	265.20	No Bid
18" ea.	No Bid	365.44	345.14	372.01	No Bid
24" ea.	No Bid	565.01	533.62	568.35	No Bid
30" ea.	No Bid	1,378.23	1,301.67	1,346.56	No Bid
36" ea.	No Bid	1,553.81	1,448.60	1,498.56	No Bid
42"ea.	No Bid	2,048.08	1,934.30	2,001.00	No Bid
48" ea.	No Bid	2,075.20	2,474.17	2,559.49	No Bid
60" ea.	No Bid	4,503.24	4,253.06	4,399.69	No Bid

TABULATION SHEET
Hidalgo County (All funding sources, programs & entities)
"PIPES & Related Miscellaneous Items"
RFB No.: 2017-046-04-05-FAZ

HP Dual Wall Fabricated Bends

Vendors	Rio Valley Pipe LLC d/b/a CAPA					HD Supply Water Works					Act Pipe & Supply					Ferguson Waterworks					Aguaworks Pipe & Supply				
PIPE SIZE	11.25 Bend	22.5 Bend	30* Bend	45* Bend	90* Bend	11.25 Bend	22.5 Bend	30* Bend	45* Bend	90* Bend	11.25 Bend	22.5 Bend	30* Bend	45* Bend	90* Bend	11.25 Bend	22.5 Bend	30* Bend	45* Bend	90* Bend	11.25 Bend	22.5 Bend	30* Bend	45* Bend	90* Bend
12" ea.	--	--	--	--	--	74.79	74.79	83.60	103.01	90.72	70.63	70.63	78.96	97.29	85.68	75.68	76.13	85.10	105.49	92.90	--	--	--	--	--
15" ea.	--	--	--	--	--	103.75	115.95	125.82	120.92	163.99	109.51	109.51	118.83	134.20	154.88	118.75	118.75	128.86	145.52	167.94	--	--	--	--	--
18" ea.	--	--	--	--	--	157.75	157.75	173.04	189.33	230.06	148.99	148.99	163.42	178.81	217.28	161.65	161.65	177.20	193.89	235.60	--	--	--	--	--
24" ea.	--	--	--	--	--	336.92	342.40	363.22	386.66	454.91	318.19	323.38	343.04	365.18	429.63	334.93	340.40	361.10	384.40	452.25	--	--	--	--	--
30" ea.	--	--	--	--	--	466.36	528.73	608.96	602.14	775.68	440.46	499.36	575.12	568.69	732.59	463.64	525.64	605.40	598.62	771.13	--	--	--	--	--
36" ea.	--	--	--	--	--	658.41	753.63	854.81	816.65	988.46	621.83	711.77	807.32	771.28	933.54	650.76	744.87	844.36	870.64	976.96	--	--	--	--	--
42" ea.	--	--	--	--	--	830.24	996.79	1,030.03	1,058.05	1,271.88	784.11	941.41	972.80	999.27	1,201.22	815.84	979.51	1,012.16	1,039.70	1,249.82	--	--	--	--	--
48" ea.	--	--	--	--	--	1,017.08	1,247.73	1,291.33	1,316.46	1,385.39	960.58	1,178.41	1,219.59	1,243.32	1,308.42	993.70	1,219.05	1,261.65	1,286.19	1,353.54	--	--	--	--	--
60" ea.	--	--	--	--	--	1,512.47	2,006.56	1,960.08	2,222.88	2,571.40	1,428.44	1,895.09	1,851.18	2,099.39	2,428.54	1,460.91	1,938.16	1,893.25	2,147.10	2,483.74	--	--	--	--	--

TABULATION SHEET
Hidalgo County (All funding sources, programs & entities)
"PIPES & Related Miscellaneous Items"
RFB No.: 2017-046-04-05-FAZ

BIDDER/COMPANY NAME: _____

ADDRESS: _____

CITY: _ STATE: _____ **ZIPCODE:** _____

PHONE No: _____ **FAX No:** _____ **CELL №** _____

AUTHORIZED SIGNATURE: _____

PRINTED NAME: _____

TITLE: _____ **DATE:** _____

EMAIL: _____

HIDALGO COUNTY PURCHASING DEPARTMENT
PARTICIPATING BIDDER'S LOG

BID OPENING DATE: April 05, 2017 **BID OPENING TIME: 9:30 A.M.**
DEPARTMENT/BID DESCRIPTION: "HIDALGO COUNTY - PIPES & Related Misc. Items"
BID No.: 2017-046-04-05-FAZ **BUYER: MATY FAZ**

NAME OF VENDOR: COMPANY/FIRM/EMAIL ADDRESS	BID REQUEST *VIA	SIGNATURE (IF APPLICABLE) OR INITIALS OF STAFF ADDRESSING MAIL OUT	DATE	ADDRESS & PHONE No.
1. Ferguson Waterworks Jorge Valladares frank.guerra@ferguson.com Jorge.valladares@ferguson.com	EM	Maty Faz	03/20/17	1900 W. Exp. 83 Mission, Texas 78572 Tel: 956-584-8199
2. ACT Pipe Supply Jorge Zavala jzavala@actpipeandsupply.com	EM	Maty Faz	03/20/17	1004 N. Shary Rd. Mission, Texas 78572 Tel: 956-583-1558
3. Contech Engineered Solutions Kevin Bain baink@contech-cpi.com not deliverable byazdaniha@conteches.com "Mary Sherrill" <MSherrill@conteches.com>	EM	Maty Faz	03/20/17	404 E. Ramsey Suite 109 San Antonio, TX 78216 Tel: 210-737-1129
4. Texas Irrigation Supply Rick Lake Rick.lake@txisupply.com	EM	Maty Faz	03/20/17	16816 Calply Drive Round Rock, Texas 78664 Tel: 210-323-8906
5. Virtual Builders Exchange Karen Sesters karen@virtualbx.com Jeannette@virtualbx.com	EM	Maty Faz	03/20/17	4047 Naco Perrin, Ste. 100 San Antonio, Texas 78217 Tel 210-564-6900 ext 105
6. Alamo Iron Works David W. Dennis wdennis@aiwnet.com	EM	Maty Faz	03/20/17	Tel: 210-704-8272 Fax 210-704-8517
7. Bascale Group, Inc. Carlos A. Velasco cvelasco@bascarle.com	EM	Maty Faz	03/20/17	PO Box 157 Cypress, Texas 77410-0157
8. Advantage Drainage Systems-**Manufacturer** Armando.blanco@ads-pipe.com	EM	Maty Faz	03/20/17	3137 Obsidian Drive Brownsville, Texas 78526 956-592-3215
9. HD Waterworks Joel.garcia@hdsupply.com Ruby.martinez@hdsupply.com	EM	Maty Faz	03/20/17	PO Box 2227 McAllen, Texas 78502 631-3341
10. Aguaworks Pipe & Supply thomasbennett@aguaworkspipe.com	EM	Maty Faz	03/20/17	Brownsville, Texas
11. Morrison Supply company mbuttles@yahoo.com	EM	Maty Faz	03/20/17	Harlingen, Texas
12. Concrete Asphalt Pipe Associates (CAPA) dba Rio Valley Pipe sboyd@capatexas.com	EM	Maty Faz	03/20/17	7301 W. Exp 83 Mission, Texas 78572 956-432-0600
13. Royal Ready Mix Joel Mendiola jm@royalreadymix.com	EM	Maty Faz	03/20/17	5361 N. Abram Rd Mission, Texas 78574 956-581-0044
14. IOC Company ernie@ioccompany.com **undeliverable** receptionist@ioccompany.com	EM	Maty Faz	03/20/17	9312 E. Curve Rd. Edinburg, TX 78542 (956) 380-2897
15. L & R precast Cris Tameyo Lrprecast1@aol.com	EM	Maty Faz	03/20/17	3807 N. Bentsen Palms Dr. Mission, Texas 78572 956-583-6293 956-605-5048
16. Prime Vendor Bids20@prime-vendor.com	EM	Maty Faz	03/20/17	4622 Cedar Ave. Bldg. 5 Suite 124 Wilmington, NC 28403 800-746-9554
17. CORIX Water Products James Stautzenberger james.stautzenberger@corix.com	EM	Maty Faz	03/20/17	210-724-4276 512-800-1064
18. Rio Grande Valley Chapter-AGC Attn: San Juana Schwarz-Plan Room Mgr. "Sanjuana" <sanjuana@rgvagc.org>	EMR	Maty Faz	03/20/17	(956) 423-4091 (956) 423-0174

19. d/b/a CAPA Rio Valley Pipe, LLC Magic Valley Concrete, LLC Upper Valley Materials, LLC Attn: Larry Hinojosa, Sales Administrator	EMR	Maty Faz	3/21/17	3609 W Palma Vista Dr. Palmview, TX 78572 P: (956) 432-0600|Sales Fax: (956) 583-2086 www.capatexas.com "Steve Boyd" <sboyd@capatexas.com>, dmadrigal@capatexas.com, sales@capatexas.com
20. Sunshades Tenso, McAllen, LLC Attn: Monica De La Rosa "Monica de la Rosa" <mdelarosa@tenzosunshades.com>	EMR	Maty Faz	3/27/17	
21. Aguaworks Pipe & Supply Attn: Felipe Garcia felipe.garcia@aguaworkspipe.com	IP	Maty Faz	4/5/17	501 W. FM 83 Edinburg, TX (956) 383-8600
22. Customer Solutions Coordinator Contech Engineered Solutions LLC Attn: Mary Sherrill msherrill@conteches.com www.Conteches.com	EM	Maty Faz		2201 W. Royal Lane Suite 260 |Irving, TX 75063 Office: 972-590-2011 | 888-821-3032 Fax: 972-362-6023 msherrill@conteches.com www.Conteches.com

***VIA:** **IN PERSON (IP)** **TELEPHONE REQUEST (TR)**

FACSIMILE (FAX) **BIDDER LIST MAIL OUT (BLM)** **E-MAIL (EM)**

CERTIFICATE OF LIABILITY INSURANCE

DATE (MM/DD/YYYY): 4/3/2017

THIS CERTIFICATE IS ISSUED AS A MATTER OF INFORMATION ONLY AND CONFERS NO RIGHTS UPON THE CERTIFICATE HOLDER. THIS CERTIFICATE DOES NOT AFFIRMATIVELY OR NEGATIVELY AMEND, EXTEND OR ALTER THE COVERAGE AFFORDED BY THE POLICIES BELOW. THIS CERTIFICATE OF INSURANCE DOES NOT CONSTITUTE A CONTRACT BETWEEN THE ISSUING INSURER(S), AUTHORIZED REPRESENTATIVE OR PRODUCER, AND THE CERTIFICATE HOLDER.

IMPORTANT: If the certificate holder is an ADDITIONAL INSURED, the policy(ies) must be endorsed. If SUBROGATION IS WAIVED, subject to the terms and conditions of the policy, certain policies may require an endorsement. A statement on this certificate does not confer rights to the certificate holder in lieu of such endorsement(s).

PRODUCER
Carroll Insurance Agency, Ltd.
14906 FM 529
Houston TX 77095

CONTACT NAME: Braxton Watson
PHONE (A/C, No, Ext): (281)656-3000 **FAX (A/C, No):** (281)656-3001
E-MAIL ADDRESS: service@carrollins.com

INSURER(S) AFFORDING COVERAGE	NAIC #
INSURER A : Phoenix Insurance Company	25623
INSURER B : Travelers Indemnity Co of America	25666
INSURER C : Travelers Indemnity Company of CT	25682
INSURER D :	
INSURER E :	
INSURER F :	

INSURED
ACT Pipe & Supply Inc
6950 W Sam Houston Pkwy N
Houston TX 77041-4023

COVERAGES **CERTIFICATE NUMBER:** 16-17 All Lines **REVISION NUMBER:**

THIS IS TO CERTIFY THAT THE POLICIES OF INSURANCE LISTED BELOW HAVE BEEN ISSUED TO THE INSURED NAMED ABOVE FOR THE POLICY PERIOD INDICATED. NOTWITHSTANDING ANY REQUIREMENT, TERM OR CONDITION OF ANY CONTRACT OR OTHER DOCUMENT WITH RESPECT TO WHICH THIS CERTIFICATE MAY BE ISSUED OR MAY PERTAIN, THE INSURANCE AFFORDED BY THE POLICIES DESCRIBED HEREIN IS SUBJECT TO ALL THE TERMS, EXCLUSIONS AND CONDITIONS OF SUCH POLICIES. LIMITS SHOWN MAY HAVE BEEN REDUCED BY PAID CLAIMS.

INSR LTR	TYPE OF INSURANCE	ADDL INSD	SUBR WVD	POLICY NUMBER	POLICY EFF (MM/DD/YYYY)	POLICY EXP (MM/DD/YYYY)	LIMITS	
A	X COMMERCIAL GENERAL LIABILITY CLAIMS-MADE / X OCCUR GEN'L AGGREGATE LIMIT APPLIES PER: POLICY X PRO-JECT LOC OTHER:			630-4246R291-PHX-16	10/1/2016	10/1/2017	EACH OCCURRENCE DAMAGE TO RENTED PREMISES (Ea occurrence) MED EXP (Any one person) PERSONAL & ADV INJURY GENERAL AGGREGATE PRODUCTS - COMP/OP AGG Project Aggregate	$ 1,000,000 $ 100,000 $ 5,000 $ 1,000,000 $ 2,000,000 $ 2,000,000 $ 2,000,000
B	AUTOMOBILE LIABILITY X ANY AUTO ALL OWNED AUTOS / SCHEDULED AUTOS HIRED AUTOS / NON-OWNED AUTOS X COMP $1000 X COLL $1000			810-4246R310-TIA	10/1/2016	10/1/2017	COMBINED SINGLE LIMIT (Ea accident) BODILY INJURY (Per person) BODILY INJURY (Per accident) PROPERTY DAMAGE (Per accident) 	$ 1,000,000 $ $ $ $
C	X UMBRELLA LIAB X OCCUR EXCESS LIAB / CLAIMS-MADE DED X RETENTION $ 10,000			CUP-4246R309-TCT-16	10/1/2016	10/1/2017	EACH OCCURRENCE AGGREGATE 	$ 15,000,000 $ 15,000,000 $
A	WORKERS COMPENSATION AND EMPLOYERS' LIABILITY ANY PROPRIETOR/PARTNER/EXECUTIVE OFFICER/MEMBER EXCLUDED? Y/N: N (N/A) (Mandatory in NH) If yes, describe under DESCRIPTION OF OPERATIONS below			UB-4246R28-A-16	10/1/2016	10/1/2017	X PER STATUTE / OTH-ER E.L. EACH ACCIDENT E.L. DISEASE - EA EMPLOYEE E.L. DISEASE - POLICY LIMIT	 $ 1,000,000 $ 1,000,000 $ 1,000,000

DESCRIPTION OF OPERATIONS / LOCATIONS / VEHICLES (ACORD 101, Additional Remarks Schedule, may be attached if more space is required)
RFB Bid No: 2017-046-04-05-FAZ "Pipes & Related Miscellaneous Items"

See attached Comments/Remark page (Form OFREMARK) for additional information.

CERTIFICATE HOLDER
rocio.villarreal@co.hidalg
Hidalgo County
Purchasing Dept
2812 S. Business Hwy 281
Edinburg, TX 78539

CANCELLATION
SHOULD ANY OF THE ABOVE DESCRIBED POLICIES BE CANCELLED BEFORE THE EXPIRATION DATE THEREOF, NOTICE WILL BE DELIVERED IN ACCORDANCE WITH THE POLICY PROVISIONS.

AUTHORIZED REPRESENTATIVE
D A. Carroll/HJENSE

© 1988-2014 ACORD CORPORATION. All rights reserved.

COMMENTS/REMARKS

The General Liability and Auto policies include a blanket additional insured endorsement provision that provides additional insured status to the certificate holder only when there is a written contract that requires such status. The contractual liability coverage provided by the General Liability is standard and may not cover all liabilities assumed by the named insured under its contract with the certificate holder.

The General Liability, Auto and Workers Compensation policy includes a blanket automatic waiver of subrogation endorsement that provides this feature only when there is a written contract between the named insured and certificate holder that requires it.

The policy includes a blanket notice of cancellation to certificate holders endorsement providing 30 days advanced notice if the policy is cancelled by the company other than for non payment of premium, 10 days notice after the policy is cancelled for nonpayment of premium. Notice is sent to certificate holders with mailing addresses on file with the agent or the company. The endorsement does not provide for notice of cancellation if the named insured requests cancellation.

Umbrella Follow Form: Any person or organization, other than the Named Insured, included as an additional insured under Schedule Underlying Insurance, but not for broader coverage than would be afforded by such Scheduled Underlying Insurance.

COPYRIGHT 2000, AMS SERVICES INC.

CERTIFICATE OF INTERESTED PARTIES

FORM 1295

Complete Nos. 1 - 4 and 6 if there are interested parties.
Complete Nos. 1, 2, 3, 5, and 6 if there are no interested parties.

OFFICE USE ONLY
CERTIFICATION OF FILING

Certificate Number:
2017-186828

Date Filed:
04/03/2017

Date Acknowledged:

1 Name of business entity filing form, and the city, state and country of the business entity's place of business.
ACT Pipe & Supply, Inc
Mission, TX United States

2 Name of governmental entity or state agency that is a party to the contract for which the form is being filed.
Hidalgo County

3 Provide the identification number used by the governmental entity or state agency to track or identify the contract, and provide a description of the services, goods, or other property to be provided under the contract.
RFB No.: 2017-046-04-05-FAZ
Pipes & Related Miscellaneous Items - Annual Bid

4 Name of Interested Party	City, State, Country (place of business)	Nature of interest (check applicable)	
		Controlling	Intermediary

5 Check only if there is NO Interested Party. [X]

6 AFFIDAVIT

I swear, or affirm, under penalty of perjury, that the above disclosure is true and correct.

NOTARY PUBLIC STATE OF TEXAS
SHARON HOLLENSHEAD
My Notary ID # 125013714
Expires August 6, 2020

Signature of authorized agent of contracting business entity

AFFIX NOTARY STAMP / SEAL ABOVE

Sworn to and subscribed before me, by the said Matthew Wolfe, this the 5 day of May, 20 17, to certify which, witness my hand and seal of office.

Signature of officer administering oath	Printed name of officer administering oath	Title of officer administering oath
	Matthew Wolfe	Sr. Fin. Mgr.

CERTIFICATE OF INTERESTED PARTIES

FORM 1295

Complete Nos. 1 - 4 and 6 if there are interested parties.
Complete Nos. 1, 2, 3, 5, and 6 if there are no interested parties.

OFFICE USE ONLY
CERTIFICATION OF FILING

Certificate Number:
2017-186828

Date Filed:
04/03/2017

Date Acknowledged:
05/05/2017

1 Name of business entity filing form, and the city, state and country of the business entity's place of business.
ACT Pipe & Supply, Inc
Mission, TX United States

2 Name of governmental entity or state agency that is a party to the contract for which the form is being filed.
Hidalgo County

3 Provide the identification number used by the governmental entity or state agency to track or identify the contract, and provide a description of the services, goods, or other property to be provided under the contract.
RFB No.: 2017-046-04-05-FAZ
Pipes & Related Miscellaneous Items - Annual Bid

4 Name of Interested Party	City, State, Country (place of business)	Nature of interest (check applicable)	
		Controlling	Intermediary

5 Check only if there is NO Interested Party. [X]

6 AFFIDAVIT

I swear, or affirm, under penalty of perjury, that the above disclosure is true and correct.

_____
Signature of authorized agent of contracting business entity

AFFIX NOTARY STAMP / SEAL ABOVE

Sworn to and subscribed before me, by the said _____, this the _____ day of _____, 20_____, to certify which, witness my hand and seal of office.

_____ _____ _____
Signature of officer administering oath | Printed name of officer administering oath | Title of officer administering oath

CERTIFICATE OF LIABILITY INSURANCE

DATE (MM/DD/YYYY): 05/02/2017

THIS CERTIFICATE IS ISSUED AS A MATTER OF INFORMATION ONLY AND CONFERS NO RIGHTS UPON THE CERTIFICATE HOLDER. THIS CERTIFICATE DOES NOT AFFIRMATIVELY OR NEGATIVELY AMEND, EXTEND OR ALTER THE COVERAGE AFFORDED BY THE POLICIES BELOW. THIS CERTIFICATE OF INSURANCE DOES NOT CONSTITUTE A CONTRACT BETWEEN THE ISSUING INSURER(S), AUTHORIZED REPRESENTATIVE OR PRODUCER, AND THE CERTIFICATE HOLDER.

IMPORTANT: If the certificate holder is an ADDITIONAL INSURED, the policy(ies) must have ADDITIONAL INSURED provisions or be endorsed. If SUBROGATION IS WAIVED, subject to the terms and conditions of the policy, certain policies may require an endorsement. A statement on this certificate does not confer rights to the certificate holder in lieu of such endorsement(s).

PRODUCER

StateFarm

TITO RESENDEZ, AGENT
STATE FARM INSURANCE
922 E HARRISON AVENUE
HARLINGEN, TEXAS 78550 956 423-8486

CONTACT NAME: LAUREN HAIRE
PHONE (A/C, No, Ext): 956-423-8486 FAX (A/C, No): 956-423-8765
E-MAIL ADDRESS: LAUREN.HAIRE.KQL3@STATEFARM.COM

INSURER(S) AFFORDING COVERAGE		NAIC #
INSURER A :	State Farm Lloyds	43419
INSURER B :	State Farm Mutual Automobile Insurance Company	25178
INSURER C :	State Farm Fire and Casualty Company	25143
INSURER D :	TEXAS MUTUAL INSURANCE COMPANY	525190
INSURER E :		
INSURER F :		

INSURED

AGUAWORKS PIPE & SUPPLY LLC
2907 N CENTRAL AVENUE
BROWNSVILLE, TEXAS 78526

COVERAGES **CERTIFICATE NUMBER:** **REVISION NUMBER:**

THIS IS TO CERTIFY THAT THE POLICIES OF INSURANCE LISTED BELOW HAVE BEEN ISSUED TO THE INSURED NAMED ABOVE FOR THE POLICY PERIOD INDICATED. NOTWITHSTANDING ANY REQUIREMENT, TERM OR CONDITION OF ANY CONTRACT OR OTHER DOCUMENT WITH RESPECT TO WHICH THIS CERTIFICATE MAY BE ISSUED OR MAY PERTAIN, THE INSURANCE AFFORDED BY THE POLICIES DESCRIBED HEREIN IS SUBJECT TO ALL THE TERMS, EXCLUSIONS AND CONDITIONS OF SUCH POLICIES. LIMITS SHOWN MAY HAVE BEEN REDUCED BY PAID CLAIMS.

INSR LTR	TYPE OF INSURANCE	ADDL INSD	SUBR WVD	POLICY NUMBER	POLICY EFF (MM/DD/YYYY)	POLICY EXP (MM/DD/YYYY)	LIMITS	
A	COMMERCIAL GENERAL LIABILITY ☐ CLAIMS-MADE ☒ OCCUR GEN'L AGGREGATE LIMIT APPLIES PER: ☒ POLICY ☐ PRO-JECT ☐ LOC OTHER:	Y		90-B7-K903-4	06/01/2016	06/01/2017	EACH OCCURRENCE DAMAGE TO RENTED PREMISES (Ea occurrence) MED EXP (Any one person) PERSONAL & ADV INJURY GENERAL AGGREGATE PRODUCTS - COMP/OP AGG	$ 1,000,000 $ 300,000 $ 5,000 $ 1,000,000 $ 2,000,000 $ 2,000,000
B	AUTOMOBILE LIABILITY ANY AUTO OWNED AUTOS ONLY ☒ HIRED AUTOS ONLY ☒ SCHEDULED AUTOS ☒ NON-OWNED AUTOS ONLY	Y		151 6741-A25	01/25/2017	01/25/2018	COMBINED SINGLE LIMIT (Ea accident) BODILY INJURY (Per person) BODILY INJURY (Per accident) PROPERTY DAMAGE (Per accident)	$ 500,000 $ $ $
C	☒ UMBRELLA LIAB ☐ OCCUR EXCESS LIAB ☐ CLAIMS-MADE DED RETENTION $	Y		90-LS-9565-4	02/03/2017	02/03/2018	EACH OCCURRENCE AGGREGATE	$ 1,000,000 $ 1,000,000
D	WORKERS COMPENSATION AND EMPLOYERS' LIABILITY ANY PROPRIETOR/PARTNER/EXECUTIVE OFFICER/MEMBER EXCLUDED? Y / N ☐ (Mandatory in NH) If yes, describe under DESCRIPTION OF OPERATIONS below	N / A		0001323394	04/13/2017	04/13/2018	PER STATUTE ☐ OTH-ER E.L. EACH ACCIDENT E.L. DISEASE - EA EMPLOYEE E.L. DISEASE - POLICY LIMIT	$ 1,000,000 $ 1,000,000 $ 1,000,000

DESCRIPTION OF OPERATIONS / LOCATIONS / VEHICLES (ACORD 101, Additional Remarks Schedule, may be attached if more space is required)

COUNTY OF HIDALGO SHALL BE NAMED AS ADDITIONAL INSURED ON ALL COMMERCIAL GENERAL LIABILITY POLICIES.

CERTIFICATE HOLDER

HIDALGO COUNTY
ATTN: PURCHASING DEPARTMENT
2812 S HIGHWAY BUS. 281
EDINBURG, TEXAS 78539

CANCELLATION

SHOULD ANY OF THE ABOVE DESCRIBED POLICIES BE CANCELLED BEFORE THE EXPIRATION DATE THEREOF, NOTICE WILL BE DELIVERED IN ACCORDANCE WITH THE POLICY PROVISIONS.

AUTHORIZED REPRESENTATIVE

Tito Resendez/by Mundaca

© 1988-2015 ACORD CORPORATION. All rights reserved.

Insurance Requirement Acknowledgment

I, Joe Flores, authorized representative for Aguaworks Pipe & Supply,LLC,
Company/Vendor

hereby acknowledge receipt of the County's required insurance limits. Said requirements:

- will be acquired within 10 working days after notification from Purchasing Department of bid awarded by the Hidalgo County Commissioners' Court;
- will acquire additional amounts required to meet the County's requirements within 10 working days after notification from Purchasing Department of bid award by the Hidalgo County Commissioners' Court; currently carry the following:

  Automobile Liability: $300,000.00 General Liability: $500,000.00

(X) have already been met, see attached copy of insurance certificate.

Joe Flores — Authorized Representative

05/02/17 — Date

Notice to Bidder:
A certificate of insurance for the required insurance limits shall be provided to the Purchasing Department's Contract Managers in order to qualify for award of bid and to execute a contract between your Company and the County

Failure to provide Certificates of Insurance to the Purchasing Department's Contract Managers will cause the bid award to be rescinded and re-awarded to next lowest bidder. Certificates of Insurance will be monitored and verified on a **quarterly basis** to ensure coverage policy is in place. It is the Company's obligation to maintain the appropriate insurance coverage throughout the term of the contract.

THIS FORM MUST ACCOMPANY BID PACKET

PROJECT REQUIREMENTS
ACKNOWLEDGMENT

This is to certify that I, Joe Flores, possess all of the APPLICABLE:

1. Licenses: n/a.
2. Bond (if applicable) n/a
3. Certificates: Accord Proof Insurance Certificate.
4. Permits: n/a.
5. Other: n/a.

necessary to carry out the required project. Furthermore, I am providing copies of the required documentation so that, if my company is awarded this bid, I may be eligible to enter into a contract with Hidalgo County and proceed to complete the project in a timely manner.

* Any licenses, bonds (if applicable),certificates, permits, etc. which are required must be presented as part of the bid packet in order to expedite the bid evaluation process.

Joe Flores
Authorized Signature

5/2/17.
Date

Aguaworks Pipe & Supply,LLC.
Company

2907 N Central Avenue.
Address

Brownsville, Texas 78526.
City, State, Zip

THIS FORM MUST ACCOMPANY BID PACKET

CERTIFICATE OF INTERESTED PARTIES

FORM 1295

Complete Nos. 1 - 4 and 6 if there are interested parties.
Complete Nos. 1, 2, 3, 5, and 6 if there are no interested parties.

OFFICE USE ONLY
CERTIFICATION OF FILING

Certificate Number:
2017-201237

Date Filed:
05/02/2017

Date Acknowledged:

1 Name of business entity filing form, and the city, state and country of the business entity's place of business.
Aguaworks Pipe & Supply,LLC.
Brownsville, TX United States

2 Name of governmental entity or state agency that is a party to the contract for which the form is being filed.
Hidalgo County

3 Provide the identification number used by the governmental entity or state agency to track or identify the contract, and provide a description of the services, goods, or other property to be provided under the contract.
2017-046d
Water and Wastewater materials

4 Name of Interested Party	City, State, Country (place of business)	Nature of interest (check applicable)	
		Controlling	Intermediary

5 Check only if there is NO Interested Party. [X]

6 AFFIDAVIT

I swear, or affirm, under penalty of perjury, that the above disclosure is true and correct.

PATRICIA RIVERA
Notary Public, State of Texas
Comm. Expires 03-22-2021
Notary ID 131055533

Signature of authorized agent of contracting business entity

AFFIX NOTARY STAMP / SEAL ABOVE

Sworn to and subscribed before me, by the said Joe Flores, this the 2nd day of May, 20[illegible], to certify which, witness my hand and seal of office.

Signature of officer administering oath	Printed name of officer administering oath	Title of officer administering oath
	Patricia Rivera	Notary

CERTIFICATE OF INTERESTED PARTIES

FORM 1295

Complete Nos. 1 - 4 and 6 if there are interested parties.
Complete Nos. 1, 2, 3, 5, and 6 if there are no interested parties.

OFFICE USE ONLY
CERTIFICATION OF FILING

Certificate Number:
2017-201237

Date Filed:
05/02/2017

Date Acknowledged:
05/08/2017

1 Name of business entity filing form, and the city, state and country of the business entity's place of business.

Aguaworks Pipe & Supply,LLC.
Brownsville, TX United States

2 Name of governmental entity or state agency that is a party to the contract for which the form is being filed.

Hidalgo County

3 Provide the identification number used by the governmental entity or state agency to track or identify the contract, and provide a description of the services, goods, or other property to be provided under the contract.

2017-046d
Water and Wastewater materials

4 Name of Interested Party	City, State, Country (place of business)	Nature of interest (check applicable)	
		Controlling	Intermediary

5 Check only if there is NO Interested Party. [X]

6 AFFIDAVIT

I swear, or affirm, under penalty of perjury, that the above disclosure is true and correct.

_____
Signature of authorized agent of contracting business entity

AFFIX NOTARY STAMP / SEAL ABOVE

Sworn to and subscribed before me, by the said _____, this the _____ day of _____, 20_____, to certify which, witness my hand and seal of office.

_____ _____ _____
Signature of officer administering oath | Printed name of officer administering oath | Title of officer administering oath

CERTIFICATE OF LIABILITY INSURANCE

DATE (MM/DD/YYYY): 04/12/2017

THIS CERTIFICATE IS ISSUED AS A MATTER OF INFORMATION ONLY AND CONFERS NO RIGHTS UPON THE CERTIFICATE HOLDER. THIS CERTIFICATE DOES NOT AFFIRMATIVELY OR NEGATIVELY AMEND, EXTEND OR ALTER THE COVERAGE AFFORDED BY THE POLICIES BELOW. THIS CERTIFICATE OF INSURANCE DOES NOT CONSTITUTE A CONTRACT BETWEEN THE ISSUING INSURER(S), AUTHORIZED REPRESENTATIVE OR PRODUCER, AND THE CERTIFICATE HOLDER.

IMPORTANT: If the certificate holder is an ADDITIONAL INSURED, the policy(ies) must have ADDITIONAL INSURED provisions or be endorsed. If SUBROGATION IS WAIVED, subject to the terms and conditions of the policy, certain policies may require an endorsement. A statement on this certificate does not confer rights to the certificate holder in lieu of such endorsement(s).

PRODUCER

Willis of Pennsylvania
100 Matsonford Road
Building Five, Suite 200
Radnor, PA 19087-4582

CONTACT NAME:
PHONE (A/C, NO, EXT): 610-964-8700 FAX (A/C, NO): 610-254-5600
E-MAIL ADDRESS: certificates@willis.com

INSURER(S) AFFORDING COVERAGE		NAIC #
INSURER A:	National Union Fire Ins. Co. of Pittsburg	19445-002
INSURER B:	National Union Fire Ins. Co. of Pittsburg	19445-000
INSURER C:	National Union Fire Ins. Co. of Pittsburg	19445-001
INSURER D:	New Hampshire Insurance Company	23841-001
INSURER E:		
INSURER F:		

INSURED

Ferguson Enterprises, Inc. and Subsidiaries
(See Attached Named Insured Schedule)
12500 Jefferson Avenue
Newport News, VA 23602

COVERAGES **CERTIFICATE NUMBER: 25421909** **REVISION NUMBER:**

THIS IS TO CERTIFY THAT THE POLICIES OF INSURANCE LISTED BELOW HAVE BEEN ISSUED TO THE INSURED NAMED ABOVE FOR THE POLICY PERIOD INDICATED. NOTWITHSTANDING ANY REQUIREMENT, TERM OR CONDITION OF ANY CONTRACT OR OTHER DOCUMENT WITH RESPECT TO WHICH THIS CERTIFICATE MAY BE ISSUED OR MAY PERTAIN. THE INSURANCE AFFORDED BY THE POLICIES DESCRIBED HEREIN IS SUBJECT TO ALL THE TERMS, EXCLUSIONS AND CONDITIONS OF SUCH POLICIES. LIMITS SHOWN MAY HAVE BEEN REDUCED BY PAID CLAIMS.

INSR LTR	TYPE OF INSURANCE	ADDL INSD	SUBR WVD	POLICY NUMBER	POLICY EFF (MM/DD/YYYY)	POLICY EXP (MM/DD/YYYY)	LIMITS	
A	X COMMERCIAL GENERAL LIABILITY	Y		GL712-9880	5/1/2017	5/1/2018	EACH OCCURRENCE	$ 2,000,000
	CLAIMS-MADE X OCCUR						DAMAGE TO RENTED PREMISES (Ea occurence)	$ 1,000,000
							MED EXP (Any one person)	$ 10,000
							PERSONAL & ADV INJURY	$ 2,000,000
	GEN'L AGGREGATE LIMIT APPLIES PER:						GENERAL AGGREGATE	$ 5,000,000
	POLICY X PRO-JECT X LOC						PRODUCTS - COMP/OP AGG	$ 2,000,000
	OTHER:							$
B	AUTOMOBILE LIABILITY			AOS CA1921927	5/1/2017	5/1/2018	COMBINED SINGLE LIMIT (Ea accident)	$ 5,000,000
B	X ANY AUTO			MA CA1921928	5/1/2017	5/1/2018	BODILY INJURY(Per person)	$
C	OWNED AUTOS ONLY / SCHEDULED AUTOS			VA CA1921929	5/1/2017	5/1/2018	BODILY INJURY(Per accident)	$
	X HIRED AUTOS ONLY / X NON-OWNED AUTOS ONLY						PROPERTY DAMAGE (Per accident)	$
	X Self-Insured / X Physical Damage							$
	UMBRELLA LIAB OCCUR						EACH OCCURRENCE	$
	EXCESS LIAB CLAIMS-MADE						AGGREGATE	$
	DED RETENTION $							$
D	WORKERS COMPENSATION AND EMPLOYERS' LIABILITY Y/N	N/A		WC023102516	5/1/2017	5/1/2018	X PER STATUTE / OTH-ER	
	ANY PROPRIETOR/PARTNER/EXECUTIVE OFFICER/MEMBER EXCLUDED? N (Mandatory in NH) If yes, describe under DESCRIPTION OF OPERATIONS below						E.L. EACH ACCIDENT	$ 2,000,000
							E.L. DISEASE - EA EMPLOYEE	$ 2,000,000
							E.L. DISEASE - POLICY LIMIT	$ 2,000,000

DESCRIPTION OF OPERATIONS / LOCATIONS / VEHICLES (ACORD 101, Additional Remarks Schedule, may be attached if more space is required)

See Attached for Additional Workers' Compensation Policies:

Workers' Compensation - ME
Policy No. WC023102515
Carrier: New Hampshire Insurance Company
Policy Period: 05/1/17 - 05/01/2018
Statutory
Limits:

CERTIFICATE HOLDER

Hidalgo County
Attn: Purchasing Department
2812 S. Highway Bus 281
Edinburg, TX 78539

CANCELLATION

SHOULD ANY OF THE ABOVE DESCRIBED POLICIES BE CANCELLED BEFORE THE EXPIRATION DATE THEREOF, NOTICE WILL BE DELIVERED IN ACCORDANCE WITH THE POLICY PROVISIONS.

AUTHORIZED REPRESENTATIVE

Linda D. Buelke

Coll:5060711 Tpl:2142944 Cert:25421909

© 1988-2015 ACORD CORPORATION. All rights reserved.

The ACORD name and logo are registered marks of ACORD

AGENCY CUSTOMER ID: 031419

LOC#:

ADDITIONAL REMARKS SCHEDULE

AGENCY	NAMED INSURED
Willis of Pennsylvania	Ferguson Enterprises, Inc. and Subsidiaries (See Attached Named Insured Schedule) 12500 Jefferson Avenue Newport News, VA 23602
POLICY NUMBER See First Page	
CARRIER: See First Page / NAIC CODE	EFFECTIVE DATE: See First Page

ADDITIONAL REMARKS

THIS ADDITIONAL REMARKS FORM IS A SCHEDULE TO ACORD FORM,
FORM NUMBER: 25 FORM TITLE: CERTIFICATE OF LIABILITY INSURANCE

EL Each Accident $2,000,000
EL Disease - Each Employee $2,000,000
EL Disease - Policy Limit $2,000,000

Workers' Compensation - CA
Policy No. WC023102514
Carrier: American Home Assurance Company
Policy Period: 05/1/2017-05/1/2018
Statutory
Limits:
EL Each Accident $2,000,000
EL Disease - Each Employee $2,000,000
EL Disease - Policy Limit $2,000,000

Workers' Compensation - FL
Policy No. WC02310513
Carrier: Illinois National Insurance Company
Policy Period: 05/1/2017-05/1/2018
Statutory
Limits:
EL Each Accident $2,000,000
EL Disease - Each Employee $2,000,000
EL Disease - Policy Limit $2,000,000

Workers' Compensation - MA & WI
Policy No. WC023102518
Carrier: New Hampshire Insurance Company
Policy Period: 05/1/2017-05/1/2018
Statutory
Limits:
EL Each Accident $2,000,000
EL Disease - Each Employee $2,000,000
EL Disease - Policy Limit $2,000,000

Workers' Compensation - AK,AZ,IL,KY,NC,NH,NJ,PA,UT,VA,VT
Policy No. WC023102517
Carrier: New Hampshire Insurance Company
Policy Period: 05/1/2017-05/1/2018
Statutory
Limits:
EL Each Accident $2,000,000
EL Disease - Each Employee $2,000,000
EL Disease - Policy Limit $2,000,000

County of Hidalgo is included as an Additional Insured under General Liability as required by written contract but only with respect to liability arising out of Named Insured's operations.

 © 2008 ACORD CORPORATION. All rights reserved.
The ACORD name and logo are registered marks of ACORD

Willis

Ferguson Enterprises, Inc. and Subsidiaries.
List of Named Insureds

Air Cold Supply
Air Cold Supply/Webb Distributors
Alamo Pipe & Supply
Alaska Pipe & Supply
Andrews Lighting Gallery, Inc. (dba Andrews Lighting & Hardware Gallery)
Arkansas Supply, Inc.
Ar-Jay Building Products, Inc. (dba The Ar-Jay Center)
Atlantic American Fire Equipment Company
Arkansas Supply
The Bath + Beyond
Bruce-Rogers Company
Build.com, Inc.
Builders Appliance Center, LLC
CAL-STEAM, a Wolseley Company
Camellia Valley Supply
Castle Supply Company, Inc.
CastleNorth
Central Pipe & Supply
CFP
Chadwick
City Lights Design Showroom
Clawfoot Supply, LLC
Clayton Group, Inc.
Clayton International, LLC
Cline Contract Sales
Colgan Cabinets
Colgan Distributors
Crow Company
Custom Lighting Incorporated
Custom Hardware and Accessories, Inc.
D & C Plumbing & Heating Supply
Davis & Warshow, Inc.
Davidson Electric Wholesale Supply
The Davidson Corporation, a Delaware Corporation
The Davidson Group Companies, Inc
Davidson Group Leasing
Davidson Pipe Company Inc., a New York Corporation
Davidson Pipe Supply Company, Inc.
Davies Water
Dealernet, LLC dba Dealernet
Decorative Product Source, Inc.
E & J Plumbing & Heating Supply Co.
Economy Plumbing and Heating Supply Co.
Endries International, Inc.
Energy & Process Corporation
Equarius, Inc. dba Equarius Waterworks, Meter & Automation Group
Factory Direct Appliance
Ferguson Bath Kitchen and Lighting Gallery
Ferguson Enterprises IV, Inc.
Ferguson Enterprises of Montana, Inc.
Ferguson Enterprises of Virginia, Inc.
Ferguson Enterprises V, Inc.
Ferguson Enterprises, Inc.
Ferguson Enterprises, Inc. dba WPCC Forwarding
Ferguson Enterprises, Inc. A Corp of Virginia
Ferguson Enterprises NY – Metro, Inc.
Ferguson Fire & Fabrication, Inc.
Ferguson Fire & Fabrication, Inc. (fka Action Fire Fab & Supply, Inc.)
Ferguson Fire & Fabrication, Inc. (fka Sierra Craft, Inc.)
Ferguson Full Service Supply
Ferguson Heating & Cooling
Ferguson Holdings, Inc.
Ferguson Hospitality Sales
Ferguson Industrial Plastics and Pump Division
Ferguson Integrated Systems Division, Inc.
Ferguson Intermountain Piping
Ferguson International
Ferguson Process Services
Ferguson Valve & Automation
Ferguson Waterworks
Ferguson Waterworks - Midwest Pipe
Ferguson Waterworks - Municipal Pipe
Ferguson Waterworks - Red Hed
Ferguson Waterworks EPPCO
Ferguson Waterworks International
Frischkorn, Inc.
Gabriel Scientific & Machine, LLC
Galleria Bath & Kitchen Showplace
Gilmour Supply Company, Inc.
Global HVAC Distributors, Inc.
Ferguson Enterprises, Inc. dba Groeniger

Willis

Ferguson Enterprises, Inc. and Subsidiaries.
List of Named Insureds

& Company
Gulf Refrigeration Supply
High Country Plumbing Supply
Home Equipment Company, Inc.
HP Products Corporation
HP Logistics, Inc.
Indiana Plumbing Supply Co., Inc.
Industrial Hub of the Carolinas
J&G Products
J.D. Daddario Company
Joseph G. Pollard Co., Inc.
Kandall Fabricating
Karl's Appliances, A Ferguson Enterprise
Lane Piping Co.
Lawrence Plumbing Supply Co.
Lighting Unlimited, LLC
Lincoln Products
Linwood Pipe and Supply
Living Direct, Inc.
Louisiana Utilities Supply Company
Louisiana Chemical Pipe, Valve & Fitting, Inc. dba Wolseley Industrial Group
LUSCO
Lyon Conklin & Co., Inc.
Mastercraft Cabinets
Matera Paper Company, Inc.
McFarland Supply Co., Inc.
Michigan Meter Technology
Michigan Pipe &Valve-Flint, Inc.
Michigan Pipe &Valve-Lansing, Inc.
Monotube Pile Corporation
Northern Water Works Supply, Inc.
Onda-Lay Pipe and Rental, Inc.
Page's Appliances
Palermo Supply
Park Supply
PCS Industries d/b/a HP Products Corp.
Pipe Products
Plumbing Décor
Plumb Source
Powell Pipe & Supply Company
Power Equipment Direct Inc.
P.V. Sullivan Supply Co., Inc.
R Supply Company
Ramapo Wholesalers
Record Supply Company
Redlon & Johnson
Reese Kitchen, Bath & Lighting Gallery
RenWes Sales
S.G. Supply Company

S.G. Supply Company dba SG Supply Co., a Ferguson Enterprise
Sierra Craft, Inc.
Signature Hardware
Ship-Pac, Inc. d/b/a HP Products Corp.
SOS Sales
Specialty Pipe & Tube, Inc.
Specialty Pipe & Tube of Texas, Inc.
Stock Loan Services LLC
Summer & Dunbar
Supply North Central Group
Tarpon Wholesale Supplies
T & A Valve Industries, Inc.
The Parnell-Martin Companies LLC
The Plumbers Warehouse
The Plumbing Source Inc.
The Stock Market
Tubeco Fabrication, Inc.
Underground Pipe & Valve Inc.
United Automatic
Water Works Supplies
Webb Distributors
Western Air Systems and Controls, Inc.
Westfield Lighting
WIA of California, Inc.
Wolseley Industrial Group
Wolseley Industrial Plastics
Wolseley Investments Acquisitions, Inc.
Wolseley Investments, Inc.
Wolseley NA Construction Services, LLC
Wolseley North America, Inc.
Wolseley North American Consulting, LLC
Wolseley North American Services, Inc.
WPCC Forwarding

CERTIFICATE OF INTERESTED PARTIES

FORM **1295**

Complete Nos. 1 - 4 and 6 if there are interested parties.
Complete Nos. 1, 2, 3, 5, and 6 if there are no interested parties.

OFFICE USE ONLY
CERTIFICATION OF FILING

Certificate Number:
2017-201296

Date Filed:
05/02/2017

Date Acknowledged:

1 **Name of business entity filing form, and the city, state and country of the business entity's place of business.**

Ferguson Enterprises, Inc. dba Ferguson Waterworks
Mission, TX United States

2 **Name of governmental entity or state agency that is a party to the contract for which the form is being filed.**

Hidalgo County

3 **Provide the identification number used by the governmental entity or state agency to track or identify the contract, and provide a description of the services, goods, or other property to be provided under the contract.**

2017-046C
Pipes & Miscellaneous Items

4 Name of Interested Party	City, State, Country (place of business)	Nature of interest (check applicable)	
		Controlling	Intermediary

5 **Check only if there is NO Interested Party.** [X]

6 **AFFIDAVIT**

I swear, or affirm, under penalty of perjury, that the above disclosure is true and correct.

ROBERTO OLVERA
Notary Public State of Texas
ID# 10049882-9
My Commission Expires
01-15-2020

AFFIX NOTARY STAMP / SEAL ABOVE

Francisco Guerra

Signature of authorized agent of contracting business entity

Sworn to and subscribed before me, by the said Francisco Guerra III, this the 2nd day of May, 20 17, to certify which, witness my hand and seal of office.

Signature of officer administering oath

Roberto Olvera
Printed name of officer administering oath

BCM/CBB.
Title of officer administering oath

CERTIFICATE OF INTERESTED PARTIES

FORM 1295

Complete Nos. 1 - 4 and 6 if there are interested parties.
Complete Nos. 1, 2, 3, 5, and 6 if there are no interested parties.

OFFICE USE ONLY
CERTIFICATION OF FILING

Certificate Number:
2017-201296

Date Filed:
05/02/2017

Date Acknowledged:
05/04/2017

1 Name of business entity filing form, and the city, state and country of the business entity's place of business.

Ferguson Enterprises, Inc. dba Ferguson Waterworks
Mission, TX United States

2 Name of governmental entity or state agency that is a party to the contract for which the form is being filed.

Hidalgo County

3 Provide the identification number used by the governmental entity or state agency to track or identify the contract, and provide a description of the services, goods, or other property to be provided under the contract.

2017-046-04-05-FAZ
Pipes & Miscellaneous Items

4 Name of Interested Party	City, State, Country (place of business)	Nature of interest (check applicable)	
		Controlling	Intermediary

5 Check only if there is NO Interested Party. [X]

6 AFFIDAVIT

I swear, or affirm, under penalty of perjury, that the above disclosure is true and correct.

_____
Signature of authorized agent of contracting business entity

AFFIX NOTARY STAMP / SEAL ABOVE

Sworn to and subscribed before me, by the said _____, this the _____ day of _____, 20_____, to certify which, witness my hand and seal of office.

_____ _____ _____
Signature of officer administering oath | Printed name of officer administering oath | Title of officer administering oath

CERTIFICATE OF LIABILITY INSURANCE

DATE(MM/DD/YYYY) 08/01/2016

THIS CERTIFICATE IS ISSUED AS A MATTER OF INFORMATION ONLY AND CONFERS NO RIGHTS UPON THE CERTIFICATE HOLDER. THIS CERTIFICATE DOES NOT AFFIRMATIVELY OR NEGATIVELY AMEND, EXTEND OR ALTER THE COVERAGE AFFORDED BY THE POLICIES BELOW. THIS CERTIFICATE OF INSURANCE DOES NOT CONSTITUTE A CONTRACT BETWEEN THE ISSUING INSURER(S), AUTHORIZED REPRESENTATIVE OR PRODUCER, AND THE CERTIFICATE HOLDER.

IMPORTANT: If the certificate holder is an ADDITIONAL INSURED, the policy(ies) must have ADDITIONAL INSURED provisions or be endorsed. If SUBROGATION IS WAIVED, subject to the terms and conditions of the policy, certain policies may require an endorsement. A statement on this certificate does not confer rights to the certificate holder in lieu of such endorsement(s).

Holder Identifier :

PRODUCER	CONTACT NAME:	
Aon Risk Services Northeast, Inc. New York NY Office 199 Water Street New York NY 10038-3551 USA	PHONE (A/C. No. Ext): (866) 283-7122	FAX (A/C. No.): (800) 363-0105
	E-MAIL ADDRESS:	

RECEIVED AUG 08 2016

INSURED	INSURER(S) AFFORDING COVERAGE		NAIC #
HD Supply, Inc. and its subsidiaries Cumberland Center II 3100 Cumberland Blvd Atlanta GA 30339 USA	INSURER A:	National Union Fire Ins Co of Pittsburgh	19445
	INSURER B:	New Hampshire Ins Co	23841
	INSURER C:	American Home Assurance Co.	19380
	INSURER D:	Illinois National Insurance Co	23817
	INSURER E:		
	INSURER F:		

COVERAGES **CERTIFICATE NUMBER:** 570063267478 **REVISION NUMBER:**

THIS IS TO CERTIFY THAT THE POLICIES OF INSURANCE LISTED BELOW HAVE BEEN ISSUED TO THE INSURED NAMED ABOVE FOR THE POLICY PERIOD INDICATED. NOTWITHSTANDING ANY REQUIREMENT, TERM OR CONDITION OF ANY CONTRACT OR OTHER DOCUMENT WITH RESPECT TO WHICH THIS CERTIFICATE MAY BE ISSUED OR MAY PERTAIN, THE INSURANCE AFFORDED BY THE POLICIES DESCRIBED HEREIN IS SUBJECT TO ALL THE TERMS, EXCLUSIONS AND CONDITIONS OF SUCH POLICIES. LIMITS SHOWN MAY HAVE BEEN REDUCED BY PAID CLAIMS. **Limits shown are as requested**

INSR LTR	TYPE OF INSURANCE	ADDL INSD	SUBR WVD	POLICY NUMBER	POLICY EFF (MM/DD/YYYY)	POLICY EXP (MM/DD/YYYY)	LIMITS	
A	X COMMERCIAL GENERAL LIABILITY			GL3796702	08/30/2016	08/30/2017	EACH OCCURRENCE	$2,000,000
	[ ] CLAIMS-MADE [X] OCCUR						DAMAGE TO RENTED PREMISES (Ea occurrence)	$1,000,000
							MED EXP (Any one person)	$5,000
							PERSONAL & ADV INJURY	$2,000,000
	GEN'L AGGREGATE LIMIT APPLIES PER:						GENERAL AGGREGATE	$5,000,000
	X POLICY [ ] PRO-JECT [ ] LOC						PRODUCTS - COMP/OP AGG	$4,000,000
	OTHER:							
A	AUTOMOBILE LIABILITY			CA 2935911 AOS	08/30/2016	08/30/2017	COMBINED SINGLE LIMIT (Ea accident)	$5,000,000
A	X ANY AUTO			CA 2935910 MA	08/30/2016	08/30/2017	BODILY INJURY (Per person)	
A	[ ] OWNED AUTOS ONLY [ ] SCHEDULED AUTOS [ ] HIRED AUTOS ONLY [ ] NON-OWNED AUTOS ONLY			CA 2935912 VA	08/30/2016	08/30/2017	BODILY INJURY (Per accident)	
							PROPERTY DAMAGE (Per accident)	
	[ ] UMBRELLA LIAB [ ] OCCUR						EACH OCCURRENCE	
	[ ] EXCESS LIAB [ ] CLAIMS-MADE						AGGREGATE	
	[ ] DED [ ] RETENTION							
B	WORKERS COMPENSATION AND EMPLOYERS' LIABILITY			WC014111982 AOS	08/30/2016	08/30/2017	X PER STATUTE [ ] OTH-ER	
B	ANY PROPRIETOR / PARTNER / EXECUTIVE OFFICER/MEMBER EXCLUDED? (Mandatory in NH) Y / N [N]	N/A		WC014111985 AK, AZ, VA	08/30/2016	08/30/2017	E.L. EACH ACCIDENT	$1,000,000
	If yes, describe under DESCRIPTION OF OPERATIONS below						E.L. DISEASE-EA EMPLOYEE	$1,000,000
							E.L. DISEASE-POLICY LIMIT	$1,000,000

Certificate No : 570063267478

DESCRIPTION OF OPERATIONS / LOCATIONS / VEHICLES (ACORD 101, Additional Remarks Schedule, may be attached if more space is required)

RE: PIPES - (REINFORCED POLYETHYLENE PIPE, CORRUGATES PVC AND STEEL STORM SEWER PIPES, PLUMBING PIPES, AND ADDITIONAL MISCELLANEOUS ITEMS) - BID NO. 2013-064-02-27-YZV. HIDALGO COUNTY IS INCLUDED AS ADDITIONAL INSURED IN ACCORDANCE WITH THE POLICY PROVISIONS OF THE GENERAL LIABILITY POLICY. HD SUPPLY INC.

CERTIFICATE HOLDER

HIDALGO COUNTY
Attn: PURCHASING DEPARTMENT
2812 S BUSINESS HWY 281
EDINBURG TX 78539 USA

CANCELLATION

SHOULD ANY OF THE ABOVE DESCRIBED POLICIES BE CANCELLED BEFORE THE EXPIRATION DATE THEREOF, NOTICE WILL BE DELIVERED IN ACCORDANCE WITH THE POLICY PROVISIONS.

AUTHORIZED REPRESENTATIVE

Aon Risk Services Northeast, Inc.

©1988-2015 ACORD CORPORATION. All rights reserved.

The ACORD name and logo are registered marks of ACORD

CERTIFICATE OF INTERESTED PARTIES

FORM 1295

Complete Nos. 1 - 4 and 6 if there are interested parties.
Complete Nos. 1, 2, 3, 5, and 6 if there are no interested parties.

OFFICE USE ONLY
CERTIFICATION OF FILING

Certificate Number:
2017-203701

Date Filed:
05/08/2017

Date Acknowledged:

1 Name of business entity filing form, and the city, state and country of the business entity's place of business.

HD Supply Waterworks, Ltd.
McAllen, TX United States

2 Name of governmental entity or state agency that is a party to the contract for which the form is being filed.

Hidalgo County Purchasing Department

3 Provide the identification number used by the governmental entity or state agency to track or identify the contract, and provide a description of the services, goods, or other property to be provided under the contract.

RFB: No. 2017-046-04-05-FAZ
Pipes & Related Miscellaneous Items

4 Name of Interested Party	City, State, Country (place of business)	Nature of interest (check applicable)	
		Controlling	Intermediary

5 Check only if there is NO Interested Party. [X]

6 AFFIDAVIT

I swear, or affirm, under penalty of perjury, that the above disclosure is true and correct.

ROSA E. COSS
Notary Public, State of Texas
ID# 12430155-8
My Commission Expires
08-13-2018

Signature of authorized agent of contracting business entity

AFFIX NOTARY STAMP / SEAL ABOVE

Sworn to and subscribed before me, by the said Joel Garcia, this the 8th day of May, 20 17, to certify which, witness my hand and seal of office.

Rosa E Coss — Signature of officer administering oath
Rosa E Coss — Printed name of officer administering oath
Notary Public — Title of officer administering oath

CERTIFICATE OF INTERESTED PARTIES

FORM 1295

Complete Nos. 1 - 4 and 6 if there are interested parties.
Complete Nos. 1, 2, 3, 5, and 6 if there are no interested parties.

OFFICE USE ONLY
CERTIFICATION OF FILING

Certificate Number:
2017-203701

Date Filed:
05/08/2017

Date Acknowledged:
05/08/2017

1 Name of business entity filing form, and the city, state and country of the business entity's place of business.

HD Supply Waterworks, Ltd.
McAllen, TX United States

2 Name of governmental entity or state agency that is a party to the contract for which the form is being filed.

Hidalgo County Purchasing Department

3 Provide the identification number used by the governmental entity or state agency to track or identify the contract, and provide a description of the services, goods, or other property to be provided under the contract.

RFB: No. 2017-046-04-05-FAZ
Pipes & Related Miscellaneous Items

4 Name of Interested Party	City, State, Country (place of business)	Nature of interest (check applicable)	
		Controlling	Intermediary

5 Check only if there is NO Interested Party. [X]

6 AFFIDAVIT

I swear, or affirm, under penalty of perjury, that the above disclosure is true and correct.

_____
Signature of authorized agent of contracting business entity

AFFIX NOTARY STAMP / SEAL ABOVE

Sworn to and subscribed before me, by the said _____, this the _____ day of _____, 20_____, to certify which, witness my hand and seal of office.

_____ _____ _____
Signature of officer administering oath | Printed name of officer administering oath | Title of officer administering oath

CERTIFICATE OF LIABILITY INSURANCE

DATE (MM/DD/YYYY): 2/22/2017

THIS CERTIFICATE IS ISSUED AS A MATTER OF INFORMATION ONLY AND CONFERS NO RIGHTS UPON THE CERTIFICATE HOLDER. THIS CERTIFICATE DOES NOT AFFIRMATIVELY OR NEGATIVELY AMEND, EXTEND OR ALTER THE COVERAGE AFFORDED BY THE POLICIES BELOW. THIS CERTIFICATE OF INSURANCE DOES NOT CONSTITUTE A CONTRACT BETWEEN THE ISSUING INSURER(S), AUTHORIZED REPRESENTATIVE OR PRODUCER, AND THE CERTIFICATE HOLDER.

IMPORTANT: If the certificate holder is an ADDITIONAL INSURED, the policy(ies) must be endorsed. If SUBROGATION IS WAIVED, subject to the terms and conditions of the policy, certain policies may require an endorsement. A statement on this certificate does not confer rights to the certificate holder in lieu of such endorsement(s).

PRODUCER	CONTACT NAME: Consuelo Cavazos, CISR
McAfee Insurance Agency P. O. Box 625 321 Second Street Mercedes TX 78570	PHONE (A/C, No, Ext): (956) 565-2481 FAX (A/C, No): (956) 565-2733 E-MAIL ADDRESS: consuelo@mcafeeagency.com

INSURER(S) AFFORDING COVERAGE	NAIC #
INSURER A: Ironshore Specialty Ins. Co	
INSURER B: National Liability & Fire Ins	
INSURER C: Texas Mutual Ins. Co.	
INSURER D:	
INSURER E:	
INSURER F:	

INSURED
Rio Valley Pipe, LLC
3609 West Palma Vista Drive
Palmview TX 78572-1861

COVERAGES **CERTIFICATE NUMBER:2017-2018** **REVISION NUMBER:**

THIS IS TO CERTIFY THAT THE POLICIES OF INSURANCE LISTED BELOW HAVE BEEN ISSUED TO THE INSURED NAMED ABOVE FOR THE POLICY PERIOD INDICATED. NOTWITHSTANDING ANY REQUIREMENT, TERM OR CONDITION OF ANY CONTRACT OR OTHER DOCUMENT WITH RESPECT TO WHICH THIS CERTIFICATE MAY BE ISSUED OR MAY PERTAIN, THE INSURANCE AFFORDED BY THE POLICIES DESCRIBED HEREIN IS SUBJECT TO ALL THE TERMS, EXCLUSIONS AND CONDITIONS OF SUCH POLICIES. LIMITS SHOWN MAY HAVE BEEN REDUCED BY PAID CLAIMS.

INSR LTR	TYPE OF INSURANCE	ADDL INSD	SUBR WVD	POLICY NUMBER	POLICY EFF (MM/DD/YYYY)	POLICY EXP (MM/DD/YYYY)	LIMITS	
A	X COMMERCIAL GENERAL LIABILITY CLAIMS-MADE [X] OCCUR GEN'L AGGREGATE LIMIT APPLIES PER: POLICY [X] PRO-JECT [ ] LOC OTHER:			003075700	2/22/2017	2/22/2018	EACH OCCURRENCE DAMAGE TO RENTED PREMISES (Ea occurrence) MED EXP (Any one person) PERSONAL & ADV INJURY GENERAL AGGREGATE PRODUCTS - COMP/OP AGG Employee Benefits	$ 1,000,000 $ 500,000 $ 25,000 $ 1,000,000 $ 2,000,000 $ 2,000,000 $ 1,000,000
B	AUTOMOBILE LIABILITY ANY AUTO ALL OWNED AUTOS [X] SCHEDULED AUTOS X HIRED AUTOS [X] NON-OWNED AUTOS			73TRS073449	2/22/2017	2/22/2018	COMBINED SINGLE LIMIT (Ea accident) BODILY INJURY (Per person) BODILY INJURY (Per accident) PROPERTY DAMAGE (Per accident)	$ 1,000,000 $ $ $
A	UMBRELLA LIAB [X] OCCUR X EXCESS LIAB CLAIMS-MADE DED RETENTION $			003075800	2/22/2017	2/22/2018	EACH OCCURRENCE AGGREGATE	$ 1,000,000 $ 1,000,000 $
C	WORKERS COMPENSATION AND EMPLOYERS' LIABILITY Y/N ANY PROPRIETOR/PARTNER/EXECUTIVE OFFICER/MEMBER EXCLUDED? (Mandatory in NH) N/A If yes, describe under DESCRIPTION OF OPERATIONS below			0001198034	10/27/2016	10/27/2017	X PER STATUTE OTH-ER E.L. EACH ACCIDENT E.L. DISEASE - EA EMPLOYEE E.L. DISEASE - POLICY LIMIT	 $ 1,000,000 $ 1,000,000 $ 1,000,000

DESCRIPTION OF OPERATIONS / LOCATIONS / VEHICLES (ACORD 101, Additional Remarks Schedule, may be attached if more space is required)
Contract No. C-15-013A-04-28 "Pipes and Miscellaneous Items" Hidalgo County

CERTIFICATE HOLDER

Hidalgo County Purchasing Department
2802 S Business Hwy 281
Edinburg, TX 78539

CANCELLATION

SHOULD ANY OF THE ABOVE DESCRIBED POLICIES BE CANCELLED BEFORE THE EXPIRATION DATE THEREOF, NOTICE WILL BE DELIVERED IN ACCORDANCE WITH THE POLICY PROVISIONS.

AUTHORIZED REPRESENTATIVE
Robert R Garza/CO

© 1988-2014 ACORD CORPORATION. All rights reserved.

The ACORD name and logo are registered marks of ACORD

CERTIFICATE OF INTERESTED PARTIES

FORM 1295

Complete Nos. 1 - 4 and 6 if there are interested parties.
Complete Nos. 1, 2, 3, 5, and 6 if there are no interested parties.

OFFICE USE ONLY
CERTIFICATION OF FILING

Certificate Number:
2017-201867

Date Filed:
05/03/2017

Date Acknowledged:

1 Name of business entity filing form, and the city, state and country of the business entity's place of business.
Rio Valley Pipe, LLC
Palmview, TX United States

2 Name of governmental entity or state agency that is a party to the contract for which the form is being filed.
Hidalgo County Purchasing Department

3 Provide the identification number used by the governmental entity or state agency to track or identify the contract, and provide a description of the services, goods, or other property to be provided under the contract.
2017-046-04-05-FAZ
Pipes & Related Miscellaneous Items

4 Name of Interested Party	City, State, Country (place of business)	Nature of interest (check applicable)	
		Controlling	Intermediary

5 Check only if there is NO Interested Party. [X]

6 AFFIDAVIT

I swear, or affirm, under penalty of perjury, that the above disclosure is true and correct.

NANCY M. RODRIGUEZ
Notary Public, State of Texas
Comm. Expires 08-24-2020
Notary ID 11425683

Signature of authorized agent of contracting business entity

AFFIX NOTARY STAMP / SEAL ABOVE

Sworn to and subscribed before me, by the said Larry Hinojosa, this the 3rd day of May, 20 17, to certify which, witness my hand and seal of office.

Signature of officer administering oath | Nancy M. Rodriguez — Printed name of officer administering oath | Notary — Title of officer administering oath

CERTIFICATE OF INTERESTED PARTIES

FORM 1295

Complete Nos. 1 - 4 and 6 if there are interested parties.
Complete Nos. 1, 2, 3, 5, and 6 if there are no interested parties.

OFFICE USE ONLY
CERTIFICATION OF FILING

Certificate Number:
2017-201867

Date Filed:
05/03/2017

Date Acknowledged:
05/04/2017

1 Name of business entity filing form, and the city, state and country of the business entity's place of business.

Rio Valley Pipe, LLC
Palmview, TX United States

2 Name of governmental entity or state agency that is a party to the contract for which the form is being filed.

Hidalgo County Purchasing Department

3 Provide the identification number used by the governmental entity or state agency to track or identify the contract, and provide a description of the services, goods, or other property to be provided under the contract.

2017-046-04-05-FAZ
Pipes & Related Miscellaneous Items

4 Name of Interested Party	City, State, Country (place of business)	Nature of interest (check applicable)	
		Controlling	Intermediary

5 Check only if there is NO Interested Party. [X]

6 AFFIDAVIT

I swear, or affirm, under penalty of perjury, that the above disclosure is true and correct.

_____
Signature of authorized agent of contracting business entity

AFFIX NOTARY STAMP / SEAL ABOVE

Sworn to and subscribed before me, by the said _____, this the _____ day of _____, 20_____, to certify which, witness my hand and seal of office.

_____ _____ _____
Signature of officer administering oath | Printed name of officer administering oath | Title of officer administering oath

Zimbra **rocio.villarreal@co.hidalgo.tx.us**

RE: C-17-046-06-13-RIO VALLEY PIPES

From : Steve Crain <scrain@atlashall.com> Tue, May 30, 2017 01:53 PM
Subject : RE: C-17-046-06-13-RIO VALLEY PIPES
To : 'Rocio Villarreal' <rocio.villarreal@co.hidalgo.tx.us>

The contract is OK.

From: Rocio Villarreal [mailto:rocio.villarreal@co.hidalgo.tx.us]
Sent: Tuesday, May 30, 2017 9:03 AM
To: Steve Crain <scrain@atlashall.com>
Subject: Re: C-17-046-06-13-RIO VALLEY PIPES

Mr. Crain:
Attached as requested is the agreement including the scheduled of auto. Please review and approve as to form.

Thank you.

ROCIO VILLARREAL
HIDALGO COUNTY PURCHASING DEPT.
CONTRACTS MANAGER
(956) 318-2626 Work
(956) 292-7000 Ext. 4868 Work
rocio.villarreal@co.hidalgo.tx.us
2812 S. Business Hwy 281
Edinburg, Texas 78539

From: "Steve Crain" <scrain@atlashall.com>
To: "Rocio Villarreal" <rocio.villarreal@co.hidalgo.tx.us>
Sent: Monday, May 29, 2017 5:16:12 PM
Subject: RE: C-17-046-06-13-RIO VALLEY PIPES

Autos are not scheduled.

From: Rocio Villarreal [mailto:rocio.villarreal@co.hidalgo.tx.us]
Sent: Friday, May 26, 2017 1:34 PM
To: Steve Crain <scrain@atlashall.com>
Subject: C-17-046-06-13-RIO VALLEY PIPES

Mr. Crain:

Can you please review and approve as to form.

Thank you.

ROCIO VILLARREAL
HIDALGO COUNTY PURCHASING DEPT.
CONTRACTS MANAGER
(956) 318-2626 Work
(956) 292-7000 Ext. 4868 Work
rocio.villarreal@co.hidalgo.tx.us
2812 S. Business Hwy 281
Edinburg, Texas 78539

REQUIREMENTS AGREEMENT
C-17-046-05-30

THIS AGREEMENT (the "Agreement") is entered into effective as of the 30th day of May, 2017 by and between Rio Valley Pipe, LLC ("Seller") and Hidalgo County, Texas ("Buyer").

WHEREAS, Buyer has solicited sealed bids for the supply of its requirements of **Hidalgo County** for the **"Pipes and Misc. Items,"** (the "Product") for **HIDALGO COUNTY**, as further described in Exhibit "A", Request for Bids (RFB) Procurement Packet as attached hereto and incorporated herein by reference for all purposes (the "RFB") for a period of **one (1) year** and;

WHEREAS, Seller has submitted a proposal to supply Buyer's requirements; and

WHEREAS, Buyer has determine that Seller has submitted the lowest and best bid to meet Buyer's requirements for certain of the Products, as herein after described.

NOW THEREFORE, for and in consideration of the mutual covenants and conditions hereinafter set forth, and other good and valuable consideration, the receipt and sufficiency of which is hereby acknowledged, the parties hereto agree as follows:

1. Buyer agrees to purchase from Seller, and Seller agrees to sell and deliver to Buyer, all of the Products listed on Exhibit "B", which is attached hereto and incorporated herein by reference, that Buyer may require for use by Buyer in Hidalgo County projects for a period of a **one (1) year** with the County's option to extend/renew for an additional one (1) year period under the same rates, terms and conditions. Hidalgo County reserves the right to continue this bid for an additional sixty (60) day grace period, under the same rates, terms and conditions at the end of the contract term for unforeseen delays in award of new bid for the next contract term. This Contract shall commence on **June 30, 2017** and expire on **June 29, 2018** and it is agreed that the Products will meet the Specifications in the Request for Bids (RFB) Procurement Packet set forth in Exhibit "A" hereto.

2. When Buyer determines that it needs a quantity of the Products to be delivered, it will, according to its Purchasing Policies, complete and submit to Seller a Purchase Order describing the type and quantity of the Products required. The Products are to be delivered by Seller to the location in Hidalgo County specified by Buyer in its Purchase Order.

3. Buyer agrees to pay Seller for each Purchase Order based on the prices set out in Exhibit "B". Seller shall render invoices for each Purchase Order, and the invoices shall be paid by Buyer on or before the 30th day following receipt of the invoice.

4. General Provisions.

a. **Conflict with Applicable Law.** Nothing in this Agreement shall be

construed so as to require the commission of any act contrary to law, and whenever there is any conflict between any provision of this Agreement and any present or future law, ordinance or administrative, executive or judicial regulation, order or decree, or amendment thereof, contrary to which the parties have no legal right to contract, the latter shall prevail, but in such event the affected provision or provisions of this Agreement shall be modified only to the extent necessary to bring them within the legal requirements and only during the time such conflict exists.

b. **No Waiver.** No waiver by Buyer of any breach of any provision of this Agreement shall be deemed to be a waiver of any preceding or succeeding breach of the same or any other provision hereof.

c. **Entire Agreement.** This Agreement contains the entire contract between the parties hereto, and each party acknowledges that neither has made (either directly or through any agent or representative) any representations or agreements in connection with this Agreement not specifically set forth herein. This Agreement may be modified or amended only by agreement in writing executed by Buyer and Seller, and not otherwise.

d. **Texas Law to Apply.** This Agreement shall be construed under and in accordance with the laws of the State of Texas, and all obligations of the parties created hereunder are performable in Hidalgo County, Texas. The parties hereby consent to personal jurisdiction in Hidalgo County, Texas.

e. **Notice.** Except as may be otherwise specifically provided in this Agreement, all notices, demands, requests or communications required or permitted hereunder shall be in writing and shall either be (i) personally delivered against a written receipt, or (ii) sent by registered or certified mail, return receipt requested, postage prepaid and addressed to the parties at the addresses set forth below, or at such other addresses as may have been theretofore specified by written notice delivered in accordance herewith:

If to Buyer:
Hidalgo County
Attention: County Judge
1615 South Closner, Suite J
Edinburg, Texas 78539

If to Seller:
Rio Valley Pipe
Attention: Larry Hinojosa, Sales Administrator
3609 W. Palma Vista Drive
Palmview, Texas 78572

Each notice, demand, request or communication which shall be delivered or mailed in the manner described above shall be deemed sufficiently given for all purposes at such time as it is personally delivered to the addressee or, if mailed, at such time as it is deposited in the Unites States mail.

f. **Termination.** Buyer may terminate this Agreement at any time for any reason or no reason at all upon giving thirty (30) days written notice.

g. **Additional Documents.** The parties hereto covenant and agree that they will execute such other and further instruments and documents as are or may become necessary or convenient to effectuate and carry out the terms of this Agreement.

h. **Successors.** This Agreement shall be binding upon and inure to the benefit of the parties hereto and their respective heirs, executors, administrators, legal representatives, successors, and assigns where permitted by this Agreement.

i. **Assignment.** This Agreement shall not be assignable.

j. **Headings.** The headings and captions contained in this Agreement are solely for convenient reference and shall not be deemed to affect the meaning or interpretation of any provision or paragraph hereof.

k. **Gender and Number.** All pronouns used in this Agreement shall include the other gender, whether used in the masculine, feminine or neuter gender, and the singular shall include the plural whenever and as often as may be appropriate

l. **Authority to Execute.** The execution and performance of this Agreement by Buyer and Seller have been duly authorized by all necessary laws, resolutions or corporate action, and this Agreement constitutes the valid and enforceable obligations of Buyer and Seller in accordance with its terms.

m. **Insurance.** Seller shall provide, to the extend it deems necessary, insurance in force on all persons connected with providing services under this Contract naming Buyer as an additional insured, and shall furnish to Buyer certificates of such insurance coverage Exhibit "C", which is attached hereto.

n. **Commitment of Current Revenues Only**. In the event that, during any term hereof, the Commissioners Court of Buyer does not appropriate sufficient funds to meet the obligations of Buyer under this Agreement, Buyer may terminate this Agreement upon ninety (90) days written notice to Seller. Buyer agrees, however, to use reasonable efforts to secure funds necessary for the continued performance of this Agreement. The parties intend this provision to be a continuing right to terminate this Agreement at the expiration of each budget period of Buyer pursuant to the provisions of Tex. Loc. Govt. Code Ann. ' 271.903

(Vernon Supp. 1996).

o. **Purchasing Ethics**. Seller represents and warrants it has not, during the process of being awarded this contract violated the following ethical standards of Buyer and, upon and after the execution of this Agreement, agrees to abide by the following ethical standards of Buyer:

(1) It shall be a breach of ethics to offer, give or agree to give any elected official, department head or employee, or former elected official, department head or employee, of Hidalgo County, or for any elected official, department head or employee or former elected official, department head or employee of Hidalgo County, to solicit, demand, accept or agree to accept from another person, entity or organization, a gratuity or an officer of employment in connection with any decision, approval, disapproval, recommendation, preparation or any part of a program requirement or purchase request, influencing the content of any specification or procurement standard, rendering of advise, investigation, auditing, or in any other advisory capacity in any proceeding or application, request for ruling, determination, claim or controversy, or other particular matter pertaining to any program requirement or a contract or subcontract, or to any solicitation or proposal therefore pending before any department or agency of Hidalgo County.

(2) It shall be a breach of ethics for any payment, gratuity or offer of employment to be made by or on behalf of a subcontractor under a contract to the prime contractor or higher tier subcontractor for any contract for Hidalgo County, or any person associated therewith, as an inducement for the award of a subcontract or order.

p. **Immunities.** Nothing in this Agreement is intended to and Buyer does not hereby waive, release or relinquish any right to assert any of the defenses Buyer enjoys by virtue of the state or federal constitution, laws, rules or regulations, and any soverign, official or qualified immunity available to Buyer as to any claim or action of any person, entity, or individual against Buyer.

EXECUTED effective as of the day and year first above written.

APPROVED AS TO FORM:
Atlas, Hall & Rodriguez, LLP

By: _____
Stephen L. Crain

COUNTY OF HIDALGO

By:_____
Ramon Garcia, County Judge

ATTEST:

_____
Arturo Guajardo Jr., County Clerk

RIO VALLEY PIPE LLC

By:_____
Printed Name: _____
Title: _____

EXHIBIT “A”

REQUEST FOR SEALED BIDS (RFB) PROCUREMENT PACKET

Hidalgo County Purchasing Office
2812 S. Business Highway 281
Administration Building
Edinburg, Texas 78539
(956) 318-2626 / Fax: (956) 292-7612

March 20, 2017

Bidder's name

Address

City

State, Zip Code

Re: **HIDALGO COUNTY (All funding sources, programs & entities)**
Request for Bids - **"Pipes & Related Miscellaneous Items"**
RFB Bid No.: 2017-046-04-05-FAZ

Dear Gentleman/Ladies:

Enclosed, please find the Request for Bids (RFB) packet. **Modifications and new requirements** have been added and implemented. Carefully read and review all instructions, Requirements and Specifications.

Hidalgo County Purchasing Department welcomes and appreciates your participation in the Request for Bids process.

If any further assistance is required, please do not hesitate to call the Purchasing Department (956) 318-2626 x 4854.

Sincerely,

Martha L. Salazar, CPPB
Hidalgo County Purchasing Agent

MLS/faz
Enclosures

HIDALGO COUNTY PURCHASING OFFICE
2812 S. Business Highway 281
Administration Building
Edinburg, Texas 78539
(956) 318-2626 / Fax: (956) 292-7612

TABLE OF CONTENTS
REQUEST FOR BIDS (RFB)
HIDALGO COUNTY (All funding sources, programs & entities)
"Pipes & Related Miscellaneous Items"
RFB No.: 2017-046-04-05-FAZ

ITEM	DESCRIPTION	No. OF PAGES
1.	Request For Bid Letter	1
2.	Request for Bid, Legal Notice	8
3.	Exhibit A, Specifications	15
4.	Exhibit B, Bid Page	9
5.	Exhibit C, Insurance Requirements	4
6.	Exhibit D, (CIQ) Conflict of Interest Questionnaire (if applicable)	2
7.	Exhibit E, Vendor/Bidder Application and W-9 form(s)	6
8.	Exhibit F, Certification Regarding Debarment	1
9.	Exhibit G, Title VI Appendices "A" through "E"	6
10.	Draft Contract	8
11.	RFB Submittal Checklist	1

The above mentioned items shall be found in this Request for Bids-Goods/Products-RFB packet that is attached herewith. Should you find that any of the listed items are not attached in its entirety, please contact Purchasing by calling (956) 318-2626 or e-mail, to advise us of the missing documentation, and Purchasing will forward information either through facsimile, e-mail or by U.S. Mail.

Thank you.

Martha L Salazar
Martha L. Salazar, CPPB, Purchasing Agent

3-10-
Date

Revised 09/13/16

LEGAL NOTICE

REQUEST FOR BIDS

Hidalgo County

(All funding sources, programs & entities)

"Pipes & Related Miscellaneous Items"

RFB No.: 2017-046-04-05-FAZ

REQUEST FOR BIDS

HIDALGO COUNTY (All funding sources, programs & entities)

"Pipes & Related Miscellaneous Items"

BID OPENING DATE

APRIL 5, 2017

Contact Person:

Martha L. Salazar, CPPB, Purchasing Agent
Hidalgo County Purchasing Department
Physical Address: 2802 S. Business Hwy. 281 - Administration Building
Mailing/Postal Address: 2812 S. Business Hwy. 281
Edinburg, Texas 78539
(956) 318-2626

Form HCPD-03

1. Sealed bids will be received for **"HIDALGO COUNTY (All funding sources, programs & entities) - "*Pipes & Related Miscellaneous Items*"** in accordance with the specifications attached as **Exhibit "A"** hereto. Bids should address all specifications set forth. Bidders may suggest substitutions of features which they feel would be in the best interest of Hidalgo County ("County"). Strong rationale must be presented for any deviation from the specifications. Hidalgo County reserves the right to reject the deviation and its effect on the overall bid.

2. **One (1) original and Three (3) copies** of all bids are required with the bidders name and return address clearly typed and or/printed on upper left hand corner and the proper notation clearly typed/printed on the lower left hand corner of the envelope and/or package: **BID No.: 2017-046-04-05-FAZ "HIDALGO COUNTY (All funding sources, programs & entities) - *Pipes & Related Miscellaneous Items*"** and at County's Purchasing Department with a physical address: 2802 S. Business 281 and a mailing address: 2812 S. Business Hwy 281, Administration Building, Edinburg, Texas, **on or before 9:30 A.M, WEDNESDAY, APRIL 5, 2017. NO FACSIMILES, EMAILS OR LATE ARRIVALS WILL BE ACCEPTED. ANY RFB RECEIVED AFTER THAT TIME WILL NOT BE OPENED AND WILL BE RETURNED. OVERNIGHT MAIL MUST ALSO BE PROPERLY LABELED ON THE OUTSIDE OF EXPRESS ENVELOPE OR PACKAGE WITH REFERENCE TO** RFB No.: **2017-046-04-05-FAZ "HIDALGO COUNTY (All funding sources, programs & entities) - *Pipes & Related Miscellaneous Items*"** Hidalgo County reserves the right to refuse and reject any/all bids and to waive any/all formalities or technicalities, or to accept the bids considered the best and most advantageous to Hidalgo County.

   Additionally, all forms listed below must be properly executed and included with your bid:

   1. Legal Notice (See page 8);
   2. Bid Page – Procurement Form – Areas of Specialization (See **Exhibit "B"**);
   3. Insurance pages with Acknowledgment Forms (See **Exhibit "C"**);
   4. Form CIQ-Conflict of Interest Questionnaire (See **Exhibit "D"**);
   5. Vendor Bidder Application & W-9 forms (See **Exhibit "E"**);
   6. Certification Regarding Debarment (See **Exhibit "F"**); and
   7. SAMS.gov Registration Acknowledgement (See Number 18 below).

3. Hidalgo County reserves the right to: A. separate and accept, or eliminate any item(s) listed under this bid that it deems necessary to accommodate budgetary and/or operational requirements; B. reject any or all bids submitted and further reserves the right to design the evaluation criteria to be used in selecting the lowest and best bid for approval; C. award the bid to one bidder or to multiple bidders if the County determines it is in its best interest to do so; D. award the contract to the responsible bidder who submits the lowest and best bid. "Lowest and best" means a bid or offer providing the best value considering associated direct and indirect costs, including transport, maintenance, reliability, and life cycle, warranties, and customer service after a sale.

4. The Bidder shall not substitute items named in the bid without the express written consent of Hidalgo County. Failure of the delivered item to perform as specified or failure to meet the stated delivery schedule shall release Hidalgo County from all obligations to the contracting party with regard to the item(s) in question. In such event, County may elect to award the contract to the next-lowest responsible bidder, or to reject all bids and re-advertise.

5. For work to be performed at a County owned or operated location, each bidder shall, in its sole discretion, visit the job site before preparing the bid and thoroughly familiarize himself/herself with existing conditions. Bidder should take field dimensions and note all circumstances which affect the dollar amount of the bid.

6. Descriptive specifications are referenced in this document to indicate the general kind and quality of equipment desired by Hidalgo County. Due to various styles and models of equipment, bidders are required to include illustrations, specifications, explanation of warranties, and service data with their bid including catalogue numbers and any necessary references.

7. No bid may be withdrawn within thirty (30) days from the scheduled time to open bids.

8. Proposed prices are to remain firm for a minimum of ninety (90) days after bid opening.

9. Any interpretations, amendments, corrections or changes to this bid document must be in a written addendum and signed by the County Judge or his designee. Addenda will be mailed to all who are known to have received a copy of the Request for Bids. Bidders shall acknowledge receipt of all addenda as a part of their bid.

10. County reserves the right to accept or reject any or all Bids.

11. Costs are to be net F.O.B., County Prepaid.

12. County is exempt from Federal Excise Tax, State Tax and Local Tax. Do Not include tax in cost figure. If it is determined that tax was included in the cost figures it will not be included in the tabulation of any awards. Tax exemption certificates will be furnished upon request.

13. Funds for this procurement have been provided through the County budget for this fiscal year only. County, on an annual basis, has the right to reconsider a contract during the budget process for ensuing years if financial resources of County are insufficient to meet the liabilities of said contract. The award of a bid or contract hereunder will not be construed to create a debt of the County which is payable out of funds beyond the current fiscal year.

14. Upon award and prior to execution of a contract, Sole Proprietorships are required to submit a copy of their social security cards to the Hidalgo County Auditor's Office in order to establish an account with the County. All awarded vendors must submit a completed W-9 and a copy of their Federal ID Number Certificate.

15. DELIVERY INSTRUCTIONS:
    - No deliveries accepted after 3:00 P.M., Monday-Friday.
    - At least seventy two (72) hours prior notice of delivery must be given to Martha L. Salazar, Purchasing Agent before delivery will be accepted.
    - If you need additional information call the office listed below:

      Hidalgo County Purchasing Department
      Martha L. Salazar, Purchasing Agent
      (956) 318-2626

16. BILLING AND PAYMENT INSTRUCTIONS:
    - Invoices must include:
      a) Name and address of successful bidder
      b) Name and address of receiving department or official
      c) Purchase Order Number (if any)
      d) Notation - "HIDALGO COUNTY (All funding sources, programs & entities) -RFB No.: 2017-046-04-05-FAZ "*Pipes & Related Miscellaneous Items*"

Descriptive information as to the items or services delivered, including product code, item number, quantity, etc.

e) Contract number must be indicated on all invoices

- Discount payments will be considered when offered.
- Contact person for Billing and Payment questions:

Hidalgo County Auditor's Office
2808 S. Business Hwy 281
Edinburg, TX 78539
(956) 318-2511

17. SCHEDULE OF EVENTS

Bid Opening, 9:30 A.M.	**APRIL 5, 2017**
Award of Contract	**, 2017**
Commence Work or Deliver Products	**, 2017**

18. BID OR PERFORMANCE BOND AND DEBARMENT CERTIFICATION; PAYMENT UNDER CONTRACT:

. If the contract proposed is for the construction of public works or is for a contract for goods & services exceeding $100,000, all bidders shall furnish a good and sufficient bid bond in the amount of five percent of the total contract price. A bid bond must be executed with a surety company authorized to do business in Texas. All bidders are also required to furnish a certification or acknowledgment stating that the contractor or vendor is free from suspension or debarment pursuant to federal regulation 45CFR Part 76. Register at SAMs System for Award Management @ www.sam.gov.

. Together with the signing of a contract or issuance of a purchase order following the acceptance of a bid, and prior to commencement of the actual work, the bidder shall furnish a performance bond to the County for the full amount of the contract, if that contract exceeds $50,000.

. If the contract is for $50,000 or less, no money will be paid to the contractor until completion and acceptance of the work or the fulfillment of the purchase obligation to the County, and, if applicable, the receipt by County of satisfactory evidence that all subcontractors and material men have been paid.

. If a contract is for the construction, alteration or repair of public buildings or public works, the contractor *shall* provide a payment bond for a contract in excess of Twenty Five Thousand Dollars ($25,000.00), as required by Tex. Govt. Code Ch. 2253.

For requirements contracts, bond requirements are determined by applying the proposed unit price to the estimated quantities included in the specifications.

19. TITLE VI NOTICE/ N ,DISCRIMATION

a. "The County of Hidalgo, in accordance with the provisions of Title VI of the Civil Rights Act of 1964 (78 Stat.252, 42 U.S.C. §§2000d to 2000d-4) and the Regulations, hereby notifies all bidders that it will affirmatively ensure that any contract entered into pursuant to this advertisement, disadvantaged business enterprises will be afforded full and fair opportunity to submit bids in response to this invitation and will not be discriminated against on the grounds of race, color, or national origin in consideration for an award."

b. The appropriate clauses of Appendices "A" through "E" as delineated in the USDOT Standard Title VI/Nondiscrimination Assurances - Specific Assurances are hereby incorporated by reference as applicable. Title VI Appendices "A" through "E" are attached as **Exhibit "G.**

c. Bidder will attach all applicable notices to which it is obligated to provide or submit as part of the bid, including Form FHWA 1273 to be submitted by all contractors and subcontractors in relation to construction contracts.

20. ETHICAL STANDARDS:

. It shall be a breach of ethics to offer, give or agree to give any elected official, department head or employee, or former elected official, department head or employee, of the County, or for any elected official, department head or employee or former elected official, department head or employee of the County, to solicit, demand, accept or agree to accept from another person, entity or organization, a gratuity or an offer of employment in connection with any decision, approval, disapproval, recommendation, preparation or any part of a program requirement or purchase request, influencing the content of any specification or procurement standard, rendering of advice, investigation, auditing, or in any other advisory capacity in any proceeding or application, request for ruling, determination, claim or controversy, or other particular matter pertaining to any program requirement or a contract or subcontract, or to any solicitation or proposal therefore pending before any department or agency of the County.

. It shall be a breach of ethics for any payment, gratuity or offer of employment to be made by or on behalf of a subcontractor under a contract to the prime contractor or higher tier subcontractor for any contract for the County, or any person associated therewith, as an inducement for the award of a subcontract or order.

. No public official shall have an interest in a contract awarded hereunder except in accordance with Tex. Loc. Govt. Code Chapter 171.

NOTICE:
ALL COMMUNICATIONS BY A VENDOR TO THE COUNTY, ITS OFFICIALS, AND DEPARTMENT HEADS REGARDING THIS PROCUREMENT SHALL BE DONE THROUGH THE HIDALGO COUNTY PURCHASING DEPARTMENT.

21. DISCLOSURE OF CONFLICT OF INTEREST

. Effective January 1, 2016, Chapter 176 of the Texas Local Government Code requires that any vendor, person, consultant or contractor considering doing business with Hidalgo County ("the County") to disclose in the Conflict of Interest Questionnaire (the "CIQ") attached as Exhibit E, the vendor, person, consultant or contractor's affiliation or business relationship that might cause a conflict of interest with the County. By law, the CIQ must be filed with the Hidalgo County Clerk's Office no later than the seventh business day after the date the person becomes aware of facts that require that statement to be filed. The disclosure requirement applies to a person or business who contracts or seeks to contract with Hidalgo County for the

sale or purchase of property, goods or service. Any purchase order or contract resulting from this process shall be considered null and void if the successful bidder fails to comply with Texas Local Government Code Chapter 176. Vendors, consultants, contractors and others who desire to conduct business with Hidalgo County are encouraged to refer to Texas Local Government Code Chapter 176 for the details of this law. An offense under Texas Local Government Code Chapter 176 is a Class C Misdemeanor.

Completed Form CIQ must be submitted to the Hidalgo County Clerk's Office located at 100 N. Closner, Edinburg, Texas 78539 - Hidalgo County Courthouse.

COMPLETION AND SUBMISSION OF FORM CIQ IS THE SOLE RESPONSIBILITY OF THE PROSPECTIVE RESPONDENT. QUESTIONS REGARDING COMPLIANCE SHOULD BE DIRECTED TO YOUR LEGAL COUNSEL.

22. CERTIFICATE OF INTERESTED PARTIES (FORM HB1295)

As of January 1, 2016, to comply with Texas Government Code Section §2252.908, and the rules issued by the Texas Ethics Commission found in Title 1, Section 46.1, 46.3 and 46.5 of the Texas Administrative Code, we have updated and revised our RFB packet. In accordance with these requirements, business must submit a completed Certificate of Interested Parties Form 1295 to the County before the County may enter into a contract with the business entity. In box 3 of Form 1295, you will provide the RFB Project No. (2017-046), as shown on the packet. Once completed and filed with the Texas Ethics Commission, Form 1295 must be printed and signed in the presence of a notary and submitted to our office either by facsimile transmission to (956) 292-7612 or via email to: matilde.faz@co.hidalgo.tx.us. Hidalgo County cannot enter into a contract until Form 1295 is submitted. Therefore, failure to timely submit Form 1295 signed and notarized may result in delay of award. Full instructions for completion and submittal of Form 1295 may be found on the Texas Ethics Commission website:

https://www.ethics.state.tx.us/tec/1295-Info.htm

THE AWARDED VENDOR WILL HAVE THIRTY (30) DAYS FROM THE DATE THE HIDALGO COUNTY COMMISSIONER'S COURT APPROVES THIS AGREEMENT TO SUBMIT THE SIGNED NOTARIZED FORM 1295. *HIDALGO COUNTY CANNOT ENTER INTO A CONTRACT UNTIL FORM 1295 IS SUBMITTED.*

23. If, during the life of any contract or bid awarded, the successful bidder's net prices generally available to other customers for items awarded herein are reduced below the contracted price, it is understood and agreed that the benefits of such reduction shall be extended to the County.

24. Bids, and all goods and services provided hereunder, shall comply with all federal, state and local laws concerning this type(s) of goods and/or services.

25. Minimum Standards for Responsible Prospective Bidders: A prospective bidder must affirmatively demonstrate bidder's responsibility. A prospective bidder, by submitting a bid, represents to County that it meets the following requirements:
    - Possess or is able to obtain adequate financial resources as required to perform under the bid;
    - Be able to comply with the required or proposed delivery schedule;
    - Have a satisfactory record of performance;
    - Have a satisfactory record of integrity and ethics;
    - Be otherwise qualified and eligible to receive an award.

26. Successful bidder will pay or cause to be paid, without cost or expenses to County, all FICA, FUTA/SUTA and Federal Income Withholding Taxes of all employees, and all wages and benefits as required by Federal or State law. Successful bidder's officers, agents and/or employees will not be entitled to any benefits of an employee or elected official of County, including, but not limited to, benefits associated with County's civil service system.

27. Any contract award to a successful bidder will be in effect until (a) the contract expires, (b) delivery and acceptance of products, and/or performance of services ordered, or (c) terminated by County with thirty day's written notice prior to cancellation.

28. County reserves the right to enforce performance of any contract awarded hereunder in any manner prescribed by law or deemed to be in the best interest of the County in the event of breach or default by successful bidder; County reserves the right to terminate any contract immediately in the event a successful bidder fails to:

    A. Meet schedules;
    B. Pay any required fees or taxes; or
    C. Otherwise perform in accordance with the specifications.

29. Successful bidder shall defend, indemnify and save harmless County and all its elected officials, officers, agents and employees from all suits, actions, or other claims of any character, name and description brought for or on account of any injuries or damages received or sustained by any person, persons, or property on account of any negligent act or fault of the successful bidder, or of any agent, employee, subcontractor or supplier of successful bidder in the execution of, or performance under, any contract which may result from bid award or which arises from any event or casualty happening on or within County premises themselves or happening upon or in any halls, elevators, entrances, stairways or approaches of or to such County facilities. Successful bidder shall pay any judgment with costs which may be obtained against county growing out of such injury or damages, and shall, upon request, provide a defense to County by counsel reasonably acceptable to County. Successful bidder's indemnity hereunder shall include, but is not limited to, claims relating to patent, copyright or trademark infringement, and the like, arising out of the goods and services provided by successful bidder.

30. Successful bidder shall warrant that all items/services shall conform to the specifications and/or all warranties provided under the Uniform Commercial Code and be free from all defects in material, workmanship and the like. Items supplied under a contract pursuant to this Request for Bids shall be subject to County's approval. Items found to be defective or not meeting specifications shall be replaced by successful bidder within two business days at no expense to County. Items not picked up within one (1) week after notification shall be deemed a donation to County and may be used or disposed of at County's discretion and without waiver of any other rights of County as to the item's nonconformity.

31. This document and any disputes arising hereunder shall be governed and construed according to the laws of the State of Texas, and will be performable exclusively in Hidalgo County, Texas.

32. The successful bidder shall not assign, sell, transfer or convey its rights under any awarded contract, in whole or in part, without the prior written consent of County.

LEGAL NOTICE

Bid

For

HIDALGO COUNTY (All funding sources, programs & entities)

"Pipes & Related Miscellaneous Items"

BID No.: 2017-046-04-05-FAZ

To: Martha L. Salazar, CPPB, Purchasing Agent
Physical Address: 2802 S. Business Hwy. 281 - Administration Building
Mailing/Postal Address: 2812 S. Business Hwy. 281
Edinburg, Texas 78539

In accordance with the Specifications, and subject to all laws and regulations of the United States and state and local laws, the undersigned bidder proposes and commits to furnish all labor, equipment, material, software and services as set forth in the documents hereinbefore mentioned. The undersigned bidder further agrees, upon acceptance of its bid, to execute a contract and/or Purchase Order issued by Hidalgo County for performing and completing the work described in the Specifications within the time stated and for the prices proposed in the documents attached hereto and made a part hereof.

Bidder acknowledges receipt of all of the pages of the documents referenced in the Invitation to Bid Checklist presented in connection with this procurement. Bidder understands that Hidalgo County reserves the right to reject any or all bids and further reserves the right to design the evaluation criteria to be used in selecting the lowest and best bid.

Bidder agrees that this bid shall be good and may not be withdrawn for a period of ninety (90) calendar days after the scheduled closing time for receiving bids, as contained in the Specifications.

Respectfully submitted,

Bidder: _____

Address: _____

By: _____

Printed Name: _____

Title: _____

EXHIBIT "A"

SPECIFICATIONS/REQUIREMENTS

REQUEST FOR BIDS

Hidalgo County

(All funding sources, programs & entities)

"Pipes & Related Miscellaneous Items"

RFB No.: 2017-046-04-05-FAZ

SPECIFICATIONS AND/OR REQUIREMENTS:

Bidder(s) shall supply, where needed (on an "as needed" basis) in Hidalgo County or job site, **"PIPES, Inlets, Manholes & Miscellaneous Items".**

Bid information will be furnished to all Hidalgo County departments requiring pipes and **delivery** will involve numerous locations within Hidalgo County.

I. LOCATIONS – Departments requiring pipes.

II. DELIVERY INSTRUCTIONS
Delivery hours will be arranged with each department requiring pipes. **Bidder(s) shall deliver** the amount of product requested to **location or job site** required within 24 hours, or earlier, if requested. Bidder(s) agree(s) that, to the extent an item is unavailable from bidder's own inventory; bidder(s) will be responsible for locating an alternative supplier and for providing the product to Hidalgo County for the bid price. **VENDOR(S) MUST UNLOAD ANY/ALL ITEMS LISTED AT THE REQUESTED SITE(S).**

III. BID AWARD

1. Hidalgo County may award the bid on a lump sum basis to one (1) bidder or to multiple bidders on an item by item basis in each category, whichever is in the best interest of the County. For evaluation and consideration of items bid, samples will be submitted upon request. Categories will be as follows:

   - Category A: Pipes
   - Category B: Inlets
   - Category C: Manholes
   - Category D: Miscellaneous

CATEGORY (A) – PIPES
CORRUGATED PVC STORM SEWER PIPE SPECIFICATION

1.0 SCOPE:
Polyvinyl chloride (PVC) storm sewer/drain pipe and fitting shall be manufactured and tested in accordance with AASHTO Specifications M304.

2.0 MATERIAL AND DESIGN
The structural design of thermoplastic pipes shall be in accordance with AASHTO Standard Specifications for Highway Bridge; Section 8 titled "Soil-Thermoplastic Pipe Interaction Systems". To ensure long-term design strength properties, PVC Pipe shall be manufactured from 12454B or 12454C cell class material per ASTM D1784.

3.0 JOINING SYSTEM:
Joints may be either plastic sleeve with gaskets or an integral bell-gasket joint. When the joint is assembled, it shall prevent misalignment of adjacent pipes and form either a soil (2 psi hydrostatic test per AASHTO Standard Specifications for Highway Bridges: Section 26.4.2.4) or watertight joint (10.8 psi test per ASTM D3212 "Standard Specifications for Joints for Drain and Sewer Plastic Pipes Using Flexible Elastomeric Seals" as required.

4.0 INSTALLATION
PVC thermoplastic pipe and fittings manufactured to these specifications shall be installed in accordance with ASTM D2321-89.

Heights of Cover

DIAMETER	CORRUGATED PVC PIPE (AASHTO M304)
INCHES	FEET
12	49
15	47
18	51
24	50
30	50

*Minimum cover (H-20 live load) = (ASTM D2321 with Class A1 embedment)

CORRUGATED STEEL STORM SEWER PIPE SPECIFICATIONS

1.0 GENERAL
This item shall govern the furnishings of corrugated steel pipe and pipe-arch for culverts and storm sewer for the types, sizes and designations as specified in these specifications.

2.0 MATERIALS
This pipe shall be fabricated from sheets conforming to the current AASHTO M-274 (ASTM A819) specification for ALUMINIZED STEEL Type 2 material or the current AASHTO M-246 (ASTM 742) specification for POLYMER coated galvanized steel material.

3.0 MANUFACTURE
This pipe shall meet the requirements of AASHTO M-36 (ASTM A760) for corrugated steel pipe. All pipe shall be manufactured with a minimum of two-re-rolled annular ends.

4.0 CLASSIFICATION (TYPE) FOR DIAMETERS 46" THROUGH 96"
This pipe shall be manufactured to conform to the current AASHTO M-36 (ASTM A 760) specification and shall have an extended helical corrugation pattern of ¾ x ¾" 7 ½" as described in AASHTO M-36 (ASTM A 760).

All round pipe shall be manufactured to conform to the current AASHTO M 245 (ASTM A 762 & A 760) specification and shall have a full circular cross section with a smooth steel liner and helically corrugated shell, integrally attached at helical lock seams. All round pipe shall conform to the Type IA pipe classification. All pipe arches shall conform to the Type IIA classification.

Type I pipe classifications will also be considered. These pipes shall be manufactured out of ALUMINIZED STEEL Type 2 or POLYMER coated galvanized steel as referenced above.

5.0 POST APPLIED COATING
All Pipes manufactured with ALUMINIZED STEEL Type 2 shall be fully coated both inside and out with a minimum thickness of 0.05 in. (1.3 mm) measured from the crest of the corrugations, on the top of ribs, (as in Type IR pipe) or on the smooth inside surface of the pipe. The coating shall be uniform Class B (bituminous) or Class M (mastic) material as described in AASHTO M-190 (ASTM A 849).

6.0 GAUGE
Unless otherwise specified on the specifications, gauges shall be minimum as follows:

TYPE IR (SPIRAL CORRUGATION)	
DIAMETER	GAUGE
36-48"	16
54-60"	14
66-96"	12
TYPE I (STANDARD)	
54-138"	12
144"	10
All Types IA shall be 12 gauge shell and 18 gauge liner.	

7.0 COUPLING BANDS

Coupling bands shall be of the same base material and coating as the pipe. Coupling bands shall lap evenly on each of the pipes being connected and shall fit securely into at least one full circumferential corrugation to form a tightly closed joint.

All pipes shall be field jointed with corrugated locking bands. Connecting bands shall be drawn together by means of not less than two bolts not less than ½ in. (13 mm) diameter through angles or bar and strap device suitable welded or riveted.

Coupling bands shall be no more than three normal sheet thickness lighter than the pipe to be connected and in no case thinner than 0.052 in. (1.32 mm).

8.0 INSTALLATION

Corrugated steel pipe shall be installed as outlined in AASHTO Standard Specifications for Highway Bridges, Section 26 and ASTM A798.

9.0 MEASUREMENT

Corrugated steel pipe will be measured by linear foot. Such measurements shall be made between the ends of the barrel along its central axis. Where spurs or branches, or connections to existing pipe lines are involved, measurements of the spur or new connecting pipe will be made from the intersection of the central axis with the outside surface of the pipe into which it connects. Where inlets, headwalls, catch basins, manholes, junction chambers or other structures are included in lines of pipe that length of pipe tying into the other structure wall will be included for measurement but no other portion of the structure length or width will be included.

For multiple pipes, the measured length will be the sum of the lengths of the barrels, measured as prescribed above.

In the event of a change in design which either increases or decreases the quantity of pipe, the variation in quantity will be measured as prescribed above and the quantity shown in the specifications will be increased or decreased as the case may be.

10.0 PAYMENT

Payment for corrugated steel pipe, measured as prescribed above will be made at the contract unit price bid per linear foot for various sizes, gauges and types of corrugated steel pipe.

Payments shall be full compensation for furnishings, transporting and installing the pipe. This includes materials, labor, equipment, tools and incidentals necessary to complete the installation in accordance to these specifications.

CATEGORY (A) – PIPES
REINFORCED CONCRETE PIPE - GASKET JOINT PIPE SPECIFICATIONS

REINFORCED CONCRETE PIPE - GASKET JOINT PIPE SPECIFICATIONS						
CLASS III - ASTM C76 STANDARDS						
PIPE I.D.	WALL THICKNESS	CONCRETE STRENGTH	CAGE			PIPE WEIGHT
(in)	(in)	(PSI)	TYPE	INNER	OUTER	(LBS)
15	3.00	4,000	SINGLE	3"x6"-W1.75/W2.5		1,520
18	3.25					1,920
24	3.75					2,840
30	4.25			3"x6"-W2.5/W2.5		4,020
36	4.75		DOUBLE		3"x6"-W1.75/W2.5	5,520
42	5.25			3"x8"-W3.0/W2.0		7,100
48	5.75			3"x6"-W4.0/W2.5	3"x6"-W2.5/W2.5	8,280
54	6.25			3"x8"-W5.25/W2.5	3"x6"-W3.5/W2.5	9,800
60	6.75			2"x6"-W4.5/W2.5	3"x6"-W4.0/W2.5	12,184
72	7.75			2"x6"-W6.0/W2.5	3"x8"-W5.75/W3.0	15,900

REINFORCED CONCRETE PIPE - GASKET JOINT PIPE SPECIFICATIONS						
CLASS IV - ASTM C76 STANDARDS						
PIPE I.D.	WALL THICKNESS	CONCRETE STRENGTH	CAGE			PIPE WEIGHT
(in)	(in)	(PSI)	TYPE	INNER	OUTER	(LBS)
15	3.00	4,000	SINGLE	3"x6"-W2.5/W2.5		1,520
18	3.25					1,920
24	3.75			3"x6"-W3.5/W2.5		2,840
30	4.25			3"x6"-W4.0/W2.5		4,020
36	4.75		DOUBLE	3"x6"-W3.5/W2.5	3"x6"-W2.0/W2.0	5,520
42	5.25			3"x8"-W5.0/W2.5	3"x6"-W3.0/W2.5	7,100
48	5.75			3"x6"-W6.5/W3.0	3"x6"-W4.0/W2.5	8,280
54	6.25			2"x8"-W5.75/W3.0	3"x8"-W5.0/W2.5	9,800
60	6.75	5,000		2"x8"-W7.0/W3.0	3"x6"-W6.25/W3.0	12,184
72	7.75			2"x8"-W10.0/W4.0	2"x8"-W6.0/W2.5	15,900

REINFORCED CONCRETE PIPE - GASKET JOINT PIPE SPECIFICATIONS						
CLASS V - ASTM C76 STANDARDS						
PIPE I.D.	WALL THICKNESS	CONCRETE STRENGTH	CAGE			PIPE WEIGHT
(in)	(in)	(PSI)	TYPE	INNER	OUTER	(LBS)
15	3.00	6,000	SINGLE	3"x6"-W2.5/W2.5		1,520
18	3.25					1,920
24	3.75		DOUBLE	3"x6"-W3.0/W2.5	3"x6"-W2.5/W2.5	2,840
30	4.25			3"x6"-W4.5/W2.5	3"x6"-W3.0/W2.5	4,020
36	4.75			2"x6"-W4.5/W2.5	3"x6"-W4.0/W2.5	5,520
42	5.25			2"x8"-W6.0/W2.5	3"x8"-W5.75/W3.0	7,100
48	5.75			2"x8"-W8.0/W3.5	3"x8"-W7.0/W3.0	8,280
54	6.25			2"x8"-W10.0/W4.0	2"x8"-W6.0/W2.5	9,800
60	6.75			2"x8"-W11.5/W4.5	2"x8"-W7.0/W3.0	12,184
72	7.75			2"x6"-W8.5/W6.5	2"x8"-W10.0/W4.0	15,900

General Note:

1. Concrete gasket pipe shall meet Bureau of Reclamation R-4 Joint O-Ring gasket ASTM C361 Standards and price quote shall be included with the pipes.
2. All welded Wire Fabric Steel shall meet ASTM 82 and ASTM 185 Standards.
3. Aggregates shall meet ASTM C 33 Standards.
4. Fly Ash shall meet ASTM C 618-97 Standards.
5. Type II Cement shall meet ASTM C 150 Standards.
6. The maximum lengths of pipe sections shall be 8 feet.

The following are the technical requirements for the Reinforced Gasket Joint Concrete Pipe ASTM C-76 Class III.

D.1 GENERAL:
Pipe shall be manufactured and tested according to ASTM Designation: C-361 except as hereinafter changed and further specified. The requirements for cement, admixture, concrete strength, wall thickness, joints, manufacture and handling of pipe shall be in accordance with Paragraphs C-2, C-3, C-4, C-5, C-6, C-7, C-8, C-10, C-11, C-12, C-13 and C-14, respectively.

D.2 STEEL REINFORCEMENTS:
The reinforcing steel shall conform to requirements of Class III reinforced pipe, ASTM Designation: C-76. Reinforcements may be circular or elliptical.

D-3 PHYSICAL TEST REQUIREMENTS:
The test for internal hydrostatic pressure on the pipe shall not be less than that shown in Table "A" Paragraph C-10 thereof. The test for minimum 3-edge bearing load (pounds per linear foot) shall not be less than that required for Class III reinforced concrete pipe, ASTM Designation C-76.

RELATED PARAGRAPHS C-2 CEMENT:
The cement shall be Type II, low alkali in accordance with Federal Specifications SS-C 1960/3. The Contractor shall furnish certificates from the mill manufacturing the cement evidencing compliance with these specifications.

C-3 ADMIXTURE:
All concrete in concrete pipe placed by the placing and vibrated method shall have air-entraining agent conforming to ASTM Designations: C260. The amount of air-entraining agent used shall be such as will effect the entrainment of 2-1/2 $\pm$ 1 percent of air by volume, of the concrete as discharged from the mixer. Natural cement, slag cement, pozzolon or other mixtures shall not be added to the concrete without the written authorization of the Engineer in charge of the project.

C-4 CONCRETE STRENGTH:
The strength requirements shall be 4,000 pounds per square inch in 28 days. The 4,000 PSI concrete test shall be in accordance with the latest edition of ASTM Designation: C-76.

C-5 CONCRETE MIXTURE:
The aggregate requirements of the latest ASTM Designation: C361 are changed to include, "the maximum size coarse aggregate shall be of the largest size practicable for placement considering the wall thickness of the pipe but shall not exceed 1-1/2 inches. The percentage of coarse aggregate to the total aggregate shall be as high as practicable for manufacture of the pipe".

C-6 CURING REQUIREMENTS:
The curing requirements in the latest edition of ASTM Designation: C361 are changed to include this additional requirement at the end of the paragraph: "If forms are stripped immediately after the pipe is cast and moved to the curing area, the concrete pipe shall not be lifted or tipped until a minimum concrete compressive strength of 2,500 PSI is attained. Determination of the required strength shall be accomplished by tests of concrete cylinders as described in the latest edition of ASTM Designation: C361".

C-7 WALL THICKNESS:
The thickness of the pipe wall shall be not less than that shown in Table A, Paragraph C-10, Physical Test Requirements", hereof.

C-8 PIPE LENGTHS:
The maximum lengths of pipe sections shall be 8 feet.

C-10 PHYSICAL TEST REQUIREMENTS:
The hydrostatic test pressures for the pipe and rubber gasket joint required in the latest edition of ASTM Designations 361 are changed to those specified in Table A. The Contractor shall also perform external load crushing strength test on the pipe. The external load crushing strength test shall be in accordance with the minimum three-edge bearing load as specified in Table A.

TABLE A: PHYSICAL TEST REQUIREMENTS

Internal diameter (inches)	Minimum Shell Thickness (inches)	Internal Hydrostatic Pressure On Individual Section of Pipe (PSI)	Minimum 3-Edge Bearing Load (pounds per linear foot)
15	2	50	1,700
16	2	50	1,800
18	2	50	1,900
21	2 – ¼	45	2,100
24	2 – ½	40	2,200
30	2 – ¾	35	2,500
36	3	30	4.050
42	4 – ½	30	4,725
48	5	30	5,400
54	4 – ½	25	6,075
60	6	25	6,750
72	7	25	8,100

C-11 JOINTS:
Joints shall be made with round rubber gasket in conformance with the latest edition of ASTM Designation: C-361 and price quote shall be included with the pipes.

REINFORCED CONCRETE PIPE - TONGUE & GROOVE PIPE SPECIFICATIONS

REINFORCED CONCRETE PIPE - TONGUE & GROOVE PIPE SPECIFICATIONS						
CLASS III - ASTM C76 STANDARDS						
PIPE I.D.	WALL THICKNESS	CONCRETE STRENGTH	CAGE			PIPE WEIGHT
(in)	(in)	(PSI)	TYPE	INNER	OUTER	(LBS)
15	2.25	4,000	SINGLE	3"x6"-W1.75/W2.5		1,045
18	2.50					1,400
24	3.00					2,100
30	3.50			2"x8"-W5.0/W2.5		3,050
36	4.00			2"x8"-W6.0/W2.5		4,200
42	5.25		DOUBLE	3"x8"-W3.0/W2.0	3"x6"-W1.75/W2.5	6,250
48	5.75			3"x6"-W4.0/W2.5	3"x6"-W2.5/W2.5	8,100
54	6.25			3"x8"-W5.25/W2.5	3"x6"-W3.5/W2.5	9,420
60	6.75			2"x6"-W4.5/W2.5	3"x6"-W4.0/W2.5	11,500
72	7.75			2"x6"-W6.0/W2.5	3"x6"-W5.75/W3.0	15,900

REINFORCED CONCRETE PIPE - TONGUE & GROOVE PIPE SPECIFICATIONS						
CLASS IV - ASTM C76 STANDARDS						
PIPE I.D.	WALL THICKNESS	CONCRETE STRENGTH	CAGE			PIPE WEIGHT
(in)	(in)	(PSI)	TYPE	INNER	OUTER	(LBS)
15	3.00	4,000	SINGLE	3"x6"-W2.5/W2.5		1,045
18	3.25			2"x6"-W2.5/W2.5		1,400
24	3.75			2"x6"-W4.5/W2.5		2,100
30	4.25			2"x8"-W6.0/W2.5		3,050
36	4.75		DOUBLE	2"x8"-W5.0/W3.0	3"x8"-W4.5/W2.5	4,200
42	5.25			3"x6"-W5.0/W2.5	3"x6"-W3.0/W2.5	6,250
48	5.75			3"x6"-W6.5/W3.0	3"x6"-W4.0/W2.5	8,100
54	6.25			2"x8"-W5.75/W3.0	3"x6"-W5.0/W2.5	9,420
60	6.75			2"x8"-W7.0/W3.0	3"x8"-W6.25/W3.0	11,500
72	7.75	5,000		2"x8"-W10.0/W4.0	2"x8"-W6.0/W2.5	15,900

REINFORCED CONCRETE PIPE - TONGUE & GROOVE PIPE SPECIFICATIONS						
CLASS V - ASTM C76 STANDARDS						
PIPE I.D.	WALL THICKNESS	CONCRETE STRENGTH	CAGE			PIPE WEIGHT
(in)	(in)	(PSI)	TYPE	INNER	OUTER	(LBS)
15	3.00	6,000	SINGLE	3"x6"-W3.5/W2.5		1,045
18	3.25			3"x8"-W4.75/W2.5		1,400
24	3.75			3"x8"-W6.0/W2.5		2,100
30	4.25		DOUBLE	2"x8"-W7.0/W3.0	3"x8"-W6.25/W3.0	3,050
36	4.75			2"x8"-W8.25/W3.5	2"x8"-W5.0/W3.0	4,200
42	5.25			2"x8"-W6.0/W2.5	3"x8"-W5.75/W3.0	6,250
48	5.75			2"x8"-W8.0/W3.5	3"x8"-W7.0/W3.0	8,100
54	6.25			2"x8"-W10.0/W4.0	2"x8"-W6.0/W2.5	9,420
60	6.75			2"x8"-W11.5/W4.5	2"x8"-W7.0/W3.0	11,500
72	7.75			2"x6"-W8.5/W6.5	2"x8"-W10.0/W4.0	15,900

General Note:

1. All welded wire fabric steel shall meet ASTM 82 and ASTM 185 standards.
2. Aggregates shall meet ASTM C 33 standards.
3. Fly ash shall meet ASTM C 618-97 standards.
4. Type II cement shall meet ASTM C 150 standards.
5. Concrete joint sealant shall meet ASTM C 990 standards.
6. Concrete joint primer shall meet ASTM D 41 standards.
7. The maximum lengths of pipe sections shall be 8 feet.

REINFORCED POLYETHYLENE PIPE SPECIFICATIONS

SCOPE
This specification(s) describes reinforced polyethylene pipe for use in gravity flow storm drain and culvert applications in 24" through 96" nominal diameters.

DESCRIPTION
This pipe shall have a smooth waterway and exterior profile that is reinforced with high strength galvanized steel ribs. The continuous reinforcing ribs are completely encased within the polyethylene profile. Reinforced polyethylene pipe is manufactured using a helical winding process that results in continuously fusion welded circumferential lap seam. The pipe profile is manufactured using high pressure-rated thermoplastic meeting the requirements of ASTM F2562 "Standard Specification for Steel Reinforced Thermoplastic Ribbed Pipe and Fittings for Non-Pressure Drainage and Sewerage". For the purposes of hydraulic design, the recommended Manning's "n" value shall be 0.013 for pipe diameters included within this specification.

MATERIAL PROPERTIES
Virgin high density polyethylene pressure-related resins are used to manufacture reinforced polyethylene pipe and complimentary fabricated fittings. Resins shall conform to be minimum requirements of cell classification 345464 C as defined and described in the latest version of ASTM D3350 "Standard Specification for Polyethylene Plastic Pipe and Fittings Materials".

JOINT PERFORMANCE
Pipe lengths shall be joined on site using bell & spigots especially designed for reinforced polyethylene pipe. Both bell and spigot shall be reinforced with steel that is fully encased in pressure rated high density polyethylene meeting the requirements set forth in the above Material Properties paragraph and shall be watertight to an internal water pressure of 15 PSI when tested in accordance with ASTM D3212 "Standard Specification for Joints for Drain and Sewer Plastic Pipes Using Flexible Elastometric Seals".

FITTINGS
All fittings shall be fabricated from reinforced polyethylene pipe using fusion welded construction to ensure no loss of structural integrity of water-tightness at welded seams and joints.

INSTALLATION
Installation shall be in accordance with ASTM D2321 "Practice for Underground Installation of Thermoplastic Pipe for Sewers and Other Gravity-Flow Applications" along with product-specific recommendation by the manufacturer. Minimum cover shall be 1 ft. and maximum cover shall be 30 ft.

AWWA C900 PVC PLASTIC PRESSURE PIPE SPECIFICATIONS

SCOPE
This specification designates general requirements for 4" through 12" C.I.O.D.'s pipe produced in blue or white un-plasticized polyvinyl chloride (PVC) plastic pressure pipe with integral bell and spigot joints for the conveyance of water and other fluids. This pipe shall meet the requirements of AWWA Standard C900 "Polyvinyl Chloride (PVC) Water Distribution Pipe".

MATERIALS
All pipes shall be made from quality PVC resin, compounded to provide physical and mechanical properties that equal or exceed cell class 12454 as defined in ASTM D1784.

HYDROSTATIC PROOF TESTING
Each standard length of pipe is tested up to 400 psi for Pressure Class 165; 600 psi for Pressure Class 235; 800 psi for Pressure Class 305 for a minimum of 5 seconds. The integral bell shall be tested with the pipe.

STANDARD LAYING LENGTHS
Standard laying lengths are 20 feet for all sizes.

PIPE

All pipes shall be suitable for use as pressure conduit. Provisions must be made for expansion and contraction at each joint with an elastomeric gasket. The bell shall consist of an integral wall section with a factory installed, solid cross section Rieber or other elastomeric gasket, which meets the requirements of ASTM F477. The bell section shall be designed to be at least as hydrostatically strong as the pipe barrel and meet the requirements of AWWA C900. The joint design shall meet the requirements of ASTM D3139 under both pressure and 22 in. Hg vacuum. Sized and dimensions shall be as shown in this specification.

QUICK BURST TEST

Randomly selected samples testing in accordance with AWWA C900 and UL 1285 shall withstand, without failure, the pressures listed below when applied for 60-70 seconds.

DR	PRESSURE CLASS (psi)		MINIMUM BURST PRESSURE AT 73 F (psi)
	AWWA C900-97/FM 1612	AWWA C900-07	
25	100	165	535
18	150	235	755
14	200	305	985

DROP IMPACT TEST

Pipe shall withstand, without failure using Tup "B" and Flat Rate Holder "B", at 73 F, a tup impact energy of 100 ft-lbf for all Pressure Class of 4"-12" trade sizes. There shall be no visible evidence of shattering or splitting when the energy is imposed.

AWWA C905 PVC PLASTIC WATER PIPE SPECIFICATIONS

SCOPE

This specification designates general requirements for 14" through 48" un-plasticized polyvinyl chloride (PVC) plastic water pipe with integral bell and spigot joints for the conveyance of water and other fluids. This pipe shall meet AWWA C905 ANSI/NSF-61 and ANSI/UL 1285 (14" – 24").

MATERIALS

Pipe shall meet the requirements of AWWA Standard C905 "Polyvinyl Chloride (PVC) Water Transmission Pipe." All pipes shall be made from quality PVC resin, compounded to provide physical and mechanical properties that equal or exceed cell class 12454 as defined in ASTM D1784.

STANDARD LAYING LENGTHS

Standard laying lengths are 20 feet for all sizes.

PIPE

All pipes shall be suitable for use as pressure conduit. Provisions must be made for expansion and contraction at each joint with an elastomeric gasket. The bell shall consist of an integral wall section with a factory installed, solid cross section Rieber/other elastomeric gasket, which meets the requirements of ASTM F477. The bell section shall be designed to be at least as hydrostatically strong as the pipe barrel and meet the requirement of AWWA C905. The joint designs shall meet requirements of ASTM D3139, under both pressure and 22 in. Hg vacuum. Sizes and dimensions shall be as shown in this specification.

QUICK BURST TEST

Randomly selected samples tested in accordance with ANSI/UL 1285 shall withstand, without failure, the pressures listed below when applied for 60-70 seconds.

DR	PRESSURE RATING (psi)	MINIMUM BURST
18	235	755
25	165	535
32.5	125	400
41	100	315
51	80	255

FLATTENING TEST

Specimens of pipe, a minimum of 6 in. (150 mm) long, shall be flattened between parallel plates in a suitable press until the distance between the plates is 40 percent of OD of the pipe. The rate of flattening shall be uniform and such that the compression is completed within 2 to 5 minutes. There shall be no evidence of splitting, cracking or breaking.

SDR 26 AND SDR 35 GASKETED GRAVITY SANITARY SEWER PIPE

PVC gravity sewer pipe shall be made from a compound conforming to a cell classification of 12454 or 12364 as defined by ASTM D1784 and in accordance with ASTM D3034 for sizes four inch through fifteen inch. The wall thickness, when tested according to ASTM D3412, shall correspond to a dimension ratio of SDR 35 with a pipe stiffness value of 46 or SDR 26 with a pipe stiffness of 115 for heavy wall pipe. Integral bells shall incorporate locked in gaskets meeting the requirements of ASTM D3212 and F477. The pipe shall be provided in lengths of 14 feet or 20 feet as required.

ASTM D3034 GASKETED GRAVITY SEWER PIPE

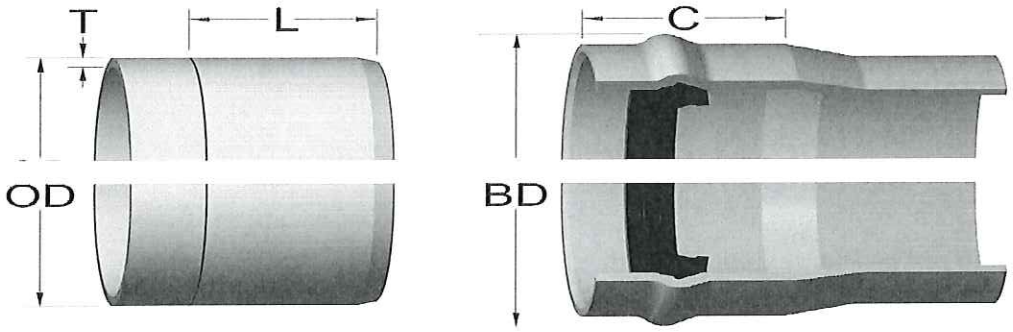

NOMINAL PIPE SIZE	OUTISDE DIA. – NOM. (OD)	*APPROX. BELL DIA. (BD)	**APPROX. BELL DEPTH (C)	INSERT MARK (L)
4"	4.215	5.25	3.75	3.13
6"	6.275	7.50	4.63	4.00
8"	8.400	10.00	5.25	4.13
10"	10.500	12.25	5.88	5.13
12"	12.500	14.25	6.50	5.38
15"	15.300	17.25	7.75	7.38

NOMINAL PIPE SIZE	SDR 35 (T)	SDR 26 (T)
4"	.120	.162
6"	.180	.241
8"	.240	.323
10"	.300	.404
12"	.360	.481
15"	.437	.588

HIGH PERFORMANCE (HP) POLYPROPYLENE STORM PIPE

1.0 SCOPE:

This specification includes materials and test methods for 12 to 60 inch diameter HP Polypropylene Pipe. The requirements of this specification are intended to provide pipe and fittings suitable for underground use in gravity-flow applications such as storm sewers, drainage and under-drains.

2.0 PIPE:

12 to 30 inch HP Polypropylene Pipe shall have a smooth interior and annular exterior corrugation and are required to meet or exceed ASTM F2736 and AASHTO M330. 36 to 60 inch pipe shall have a smooth interior and annular exterior corrugations and are required to meet or exceed ASTM F2881 and AASHTO M330. Pipe and fittings shall be homogeneous throughout and free from visible cracks, holes, foreign inclusions or other injurious defects.

3.0 FITTINGS:
Fittings shall conform to ASTM F2736, ASTM F2881 and AASHTO M330, for the respective diameters. Bell & spigot connections shall utilize a spun-on, welded or integral bell and spigot with gaskets meeting ASTM F477. Bell & spigot fittings joint shall meet the watertight joint performance requirements of ASTM D3212. Corrugated couplings shall be split collar, engaging at least 2 full corrugations.

4.0 JOINTS:
HP Polypropylene Pipe shall be joined with a gasketed integral bell & spigot joint meeting the requirements of ASTM F2736 or F2881, for the respective diameters.

HP Polypropylene Pipe shall be watertight according to the requirements of ASTM D3212. Spigots shall have gaskets meeting the requirements of ASTM F477. Gasket shall be installed by the pipe manufacturer and covered with a removable, protective wrap to ensure the gasket is free from debris. A joint lubricant available from the manufacturer shall be used on the gasket and bell during assembly.

HP Polypropylene Pipe shall have a reinforced bell with a polymer composite band installed by the manufacturer.

5.0 MATERIAL PROPERTIES:
Polypropylene compound for pipe and fitting production shall be impact modified copolymer meeting the material requirements of ASTM F2736, Section 4, ASTM F2881, Section 5 and AASHTO M330, Section 6.1, for the respective diameters.

6.0 INSTALLATION:
Installation shall be in accordance with ASTM D2321, manufacturers recommended installation guidelines and plan specifications.

7.0 PIPE DIMENSIONS:

Nominal Pipe I.D. in (mm)	12 (300)	15 (375)	18 (450)	24 (600)	30 (750)	36 (900)	42 (1050)	48 (1200)	60 (1500)
Average Pipe I.D. In (mm)	12.1 (307)	14.9 (378)	18.0 (457)	24.1 (612)	30.1 (765)	35.7 (907)	41.8 (1062)	47.3 (1201)	59.3 (1506)
Average Pipe O.D. in (mm)	14.5 (368)	17.6 (447)	21.2 (538)	28.0 (711)	35.4 (899)	41.1 (1044)	47.2 (1199)	53.8 (1367)	66.5 (1689)
Minimum Pipe Stiffness * @ 5% Deflection* #/in./in. (kN/m^2)	75 (520)	60 (411)	56 (385)	50 (343)	46 (320)	40 (275)	35 (240)	35 (240)	30 (205)

HIGH DENSITY POLYETHYLENE PIPE (HDPE)

SCOPE:
This specification describes 4- through 60 inch (100 to 1500 mm) HDPE pipe (per ASTM F2648) for use in gravity-flow land drainage applications.

PIPE Requirements:
HDPE pipe (per ASTM F2648) shall have smooth interior and annular exterior corrugations.

- 4-through 60 inch (100 to 1500 mm) shall meet ASTM F2648
- Manning's "n" value for use in design shall be 0.012

Joint Performance:
Pipe shall be joined using a bell & spigot joint meeting ASTM F2648. The joint shall be soil-tight and gaskets, when applicable, shall meet the requirements of ASTM F477. Gaskets shall be installed by the pipe manufacturer and covered with a removable wrap to ensure the gasket is free from debris. A joint lubricant supplied by the manufacturer shall be used on the gasket and bell during assembly.

Fittings:
Fittings shall conform to ASTM F 2306. Bell and spigot connections shall utilize a spun-on or welded bell and valley or saddle gasket meeting the soil-tight joint performance requirements of ASTM F 2306.

Material Properties
Material for pipe production shall be an engineered compound of virgin and recycled high density polyethylene conforming with the minimum requirements of cell classification 424420C (ESCR Test Condition B) for 4-through 10 inch (100 to 250 mm) diameters, and 435420C (ESCR Test Condition B) for 12 through 60 inch (300 to 1500 mm) diameters, as defined and described in the latest version of ASTM D3350, except that carbon black content should not exceed 4%. The design engineer shall verify compatibility with overall system including structural, hydraulic, material and installation requirements for a given application.

Installation
Installation shall be in accordance with ASTM D2321 and manufacturers published installation guidelines, with the exception that minimum cover in trafficked areas for 4-through 48 inch (100 to 1200 mm) diameters shall be one foot. (0.3 m) and for 60 inch (1500 mm) diameters, the minimum cover shall be 2 ft. (0.6 mm) in single run applications. Backfill for minimum fill heights depend on embedment material and compaction level; please refer to manufactures guide lines.

Pipe I.D In mm	4 (100)	6 (150)	8 (200)	10 (250)	12 (300)	15 (375)	18 (450)	24 (600)	30 (750)	36 (900)	42 (1050)	48 (1200)	60 (1500)
Pipe O.D. * In mm	4.8 (122)	6.9 (175)	9.1 (231)	11.4 (290)	14.5 (368)	18 (457)	22 (559)	28 (711)	36 (914)	42 (1067)	48 (1219)	54 (1372)	67 (1702)
Perforations	All diameters availability with or without perforation												

*Pipe O.D. values ar provided for reference purposes only. Values stated for 12 through 60 inch are +/- 1 inch.

TERMS & CONDITIONS:

1. The contract term will be for a period of one (1) year period with Hidalgo County's option to extend the contract for an additional one (1) year under the same rates, terms and conditions.

2. Hidalgo County reserves the right to continue this bid for an additional sixty (60) day grace period at the end of the contract term for unforeseen delay in award of new bid for next contract.

3. Hidalgo County reserves the right to hold the bids received for a period of ninety (90) days without taking action hereon.

4. Hidalgo County may award the bid on a lump sum basis to one (1) bidder or to multiple bidders on an item by item basis in each category, whichever is in the best interest of the County. For evaluation and consideration of items bid, samples will be submitted upon request. Categories will be as follows.

5. Hidalgo County reserves the right to reject any/all bids, to waive any/all formalities or Technicalities, or to accept the bid considered the best and most advantageous to the County.

6. After bid is awarded and low bidder(s) default(s) in meeting the general instructions to bidders and/or comply with contractual agreement, Hidalgo County reserves the right to seek services from the next low bidder(s). In such event, County shall charge the successful bidder(s) the difference for any additional cost of such item(s).

7. Any contract awarded to a successful bidder will be in effect until:
   (a) The contract expires,
   (b) Delivery and acceptance of products and/or performance of service ordered,
   (c) Terminated by County with thirty (30) days written notice prior to cancellation.

8. It is understood and agreed that in case Hidalgo County should need "any items listed" and it is not available within the time frame needed from the successful Bidder during the term of this contract, Hidalgo County reserves the right to purchase these items from other sources other than the successful Bidder and shall not be in violation of any terms or conditions of said contract.

9. After Bid is awarded and successful awarded contractor(s) default(s) in meeting the general instructions to bidder(s) and/or compiling with Bid agreement, Hidalgo County reserves the right to seek services from the next low bidder. In such event, County shall charge the successful bidder the difference for any additional cost to such item.

10. Hidalgo County reserves the right to seek purchases from State awarded vendors or any other Cooperative Purchasing programs, whenever it is in the best interest of the County to do so.

11. Insurance requirements for this project to be maintained throughout the contract term (Refer to limits on the Exhibit "C" for limits); insurance certificate must be submitted to the Purchasing Department prior to any services being performed by the awarded bidder.

12. The bidder(s) awarded the contract **cannot** engage the services of a **subcontractor without prior written consent of Hidalgo County** to perform services hereunder. The successful bidder(s) must present evidence that the proposed subcontractor possess all the necessary licenses and permits to perform the services and that subcontractor has obtained the required insurance.

13. Bidder(s) agree that to the extent an item(s) in unavailable for Bidder's own inventory, Bidder(s) will be responsible for locating an alternative supplier and for providing the product or service to Hidalgo County.

14. Unit prices quoted shall remain firm for the period of the contract and shall include the cost of shipping and delivery of all items to the designated FOB point and must include any and all cost in the delivered unit price.

All costs and expenses associated with the preparation and submission of proposals shall be the responsibility of the submitter and no reimbursements for such charges or expenses shall be passed onto the County.

Market Volatility and Unit Price Adjustments:
Hidalgo County recognizes that during periods of national crisis and unstable economic conditions, unforeseen price increases might affect costs for goods and services contracted on an annual basis. The following procedure may be employed to mediate price volatility:

- **Requesting Price Adjustment**: Upon written request of the Vendor to the County Purchasing Agent, the County may review evidence of prevailing industry-wide market conditions that warrant an adjustment in bid prices contained in the contract.
- A Vendor must tie any price change clause to an industry-wide or otherwise nationally recognized index, or some other form of verifiable document. Such written request must be accompanied by a certified copy of the supplier's advisory or notification to the vendor of the price changes.
- The Vendor must put the Purchasing Agent on the mailing lists for such publications so that the Purchasing Agent can monitor said changes. Such membership shall be at no cost to the County.
- The County Purchasing Agent retains the right to determine whether or not such proposed price changes are in the best interest of the County.
- No price escalation will be authorized in excess of the amount of the increase referred to in the supplier's notice.
- The County may only grant a price increase if the evidence presented is deemed reliable. Should the County allow a price increase, the approved price change shall be honored for all orders received by the vendor or contractor after the effective date of such price change. Approved price changes are not applicable to orders already issued and in process at time of price change.
- **Price Reduction**: Vendor shall notify the County at the time when the Vendor's costs for items and/or supplies reduce due to stabilization in the market at which time prices for items on this contract shall be reduced accordingly. Failure by the Vendor to notify the County of a decrease in costs for items and/or supplies for which the Vendor was granted a price adjustment, may result in immediate termination of this contract and the County shall not be obligated to pay the Vendor the difference between the contract price and the price adjustment.

- **Time Frame for Adjusted Price Increases:** Price increases are only valid for the quarter in which they are requested and approved. Prices shall return to the original contract price at the beginning of the following quarter unless a Vendor notifies the County in writing within ten (10) days of expiration of the quarter in which the price increase is in effect, that it desires to have the price increase continue or that the Vendor is requesting a different price increase for the following quarter. Such request must be supplemented with sufficient justification to demonstrate that the price increase remains necessary. The County Purchasing Department shall have sole discretion whether to grant the price increase extension. The County too, shall have discretion to unilaterally reduce, eliminate or extend a price adjustment to the Vendor at any time upon written notice from the County to the Vendor demonstrating justification for such reduction, elimination or extension of the price adjustment.

- **Allowable Review Periods**: Price adjustment reviews may only be requested by the Vendor on a quarterly basis. However, the County may at its own discretion, conduct temporary price adjustment reviews at any time. The County Purchasing Agent and/or the County Auditor reserve the right to audit and/or examine any pertinent books, documents, papers, records or invoices relating directly to the contract transaction in question after reasonable notice and during normal business hours.

- **Dollar Limit to Price Changes**: The total increase in contract price shall not exceed twenty-five percent (25%) of the original contract price during the contract term.

ADDITIONAL INFORMATION

Hidalgo County is requesting that any and all questions, inquiries, and clarifications regarding quotes, bids, proposals, or statements of qualifications be addressed to, Martha L. Salazar, CPPB, Purchasing Agent, 2812 S. Business Hwy. 281, Edinburg, Texas 78539. **TELEPHONE INQUIRIES WILL NOT BE ACCEPTED.**

All written inquiries will be accepted via facsimile (956) 292-7612 or via e-mail to matilde.faz@co.hidalgo.tx.us by no later than, Monday, March 27, 2017 by 5:00 p.m. Responses to said inquiries will be sent to all applicants via-email by no later than Wednesday, March 29, 2017 by 5:00 p.m.

EXHIBIT "B"

BID PAGE

REQUEST FOR BIDS

Hidalgo County

(All funding sources, programs & entities)

"Pipes & Related Miscellaneous Items"

RFB No.: 2017-046-04-05-FAZ

CATEGORY (A) – PIPES

CORRUGATED POLYVINYL CHLORIDE (PVC) STORM SEWER PIPE **NIGP CODE: 665-89** Polyvinyl Chloride (PVC)		
DESCRIPTION	PRICE	
12"		LF
15"		LF
18"		LF
24"		LF
30"		LF
36"		LF
42"		LF
48"		LF

CORRUGATED STEEL STORM SEWER PIPE **NIGP CODE: 210-29** Corrugated Galvanized Metal Pipe **(UNIT PRICE INCLUDES ONE GASKETED BAND CONNECTION FOR EVERY 20 FOOT JOINT)**				
DIAMETER	TYPE "IR"PIPE PRICE	TYPE "I" PIPE PRICE	TYPE "IA" PIPE PRICE	
12"				LF
15"				LF
18"				LF
24"				LF
30"				LF
36"				LF
42"				LF
48"				LF
54"				LF
60"				LF
66"				LF
72"				LF
78"				LF
84"				LF
90"				LF
96"				LF
102"				LF
108"				LF
114"				LF
120"				LF
126"				LF
132"				LF
138"				LF
144"				LF

REINFORCED CONCRETE PIPE – RUBBER GASKET JOINT PIPE NIGP CODE: 658-68						
DESCRIPTION	CLASS III PRICE		CLASS IV PRICE		CLASS V PRICE	
12"		LF		LF		LF
15"		LF		LF		LF
18"		LF		LF		LF
24"		LF		LF		LF
30"		LF		LF		LF
36"		LF		LF		LF
42"		LF		LF		LF
48"		LF		LF		LF
54"		LF		LF		LF
60"		LF		LF		LF
72"		LF		LF		LF

REINFORCED CONCRETE PIPE – TONGUE & GROOVE PIPE NIGP CODE: 658-68						
DESCRIPTION	CLASS III PRICE		CLASS IV PRICE		CLASS V PRICE	
12"		LF		LF		LF
15"		LF		LF		LF
18"		LF		LF		LF
24"		LF		LF		LF
30"		LF		LF		LF
36"		LF		LF		LF
42"		LF		LF		LF
48"		LF		LF		LF
54"		LF		LF		LF
60"		LF		LF		LF
72"		LF		LF		LF

REINFORCED POLYTHYLENE PIPE – 20 FOOT JOINTS NIGP CODE: 658-58		
DESCRIPTION	PRICE	
24"		LF
30"		LF
36"		LF
42"		LF
48"		LF
54"		LF
60"		LF
72"		LF
84"		LF
96"		LF

AWWA C900 PVC PLASTIC PRESSURE PIPE NIGP CODE: 658-56 PLASTIC PIPES OR NIGP CODE: 658-60 PVC PIPES						
DESCRIPTION	DR 14 PRICE		DR 18 PRICE		DR 25 PRICE	
4"		LF		LF		LF
6"		LF		LF		LF
8"		LF		LF		LF
10"		LF		LF		LF
12"		LF		LF		LF

AWWA C905 PVC PLASTIC WATER PIPE NIGP CODE: 658-56 PLASTIC PIPES OR NIGP CODE: 658-60 PVC PIPES									
DESCRIPTION	DR 18 PRICE		DR 25 PRICE		DR 32.5 PRICE		DR 41 PRICE		DR 51 PRICE	
14"		LF		LF		LF		LF		LF
16"		LF		LF		LF		LF		LF
18"		LF		LF		LF		LF		LF
24"		LF		LF		LF		LF		LF
30"		LF		LF		LF		LF		LF
36"		LF		LF		LF		LF		LF
42"		LF		LF		LF		LF		LF
48"		LF		LF		LF		LF		LF

SDR 26 AND SDR 35 GASKETED GRAVITY SANITARY SEWER PIPE NIGP CODE: 210-35 SEWER PIPE JOINT SEALING COMPOUND				
SIZE OF PIPE	SDR 26		SDR 35	
4"		LF		LF
6"		LF		LF
8"		LF		LF
10"		LF		LF
12"		LF		LF
15"		LF		LF

HIGH PERFORMANCE (HP) POLYPROPYLENE STORM PIPE		
DESCRIPTION	PRICE	
12"		LF
15"		LF
18"		LF
24"		LF
30"		LF
36"		LF
42"		LF
48"		LF
60"		LF

HIGH DESTINY POLYETHYLENE PIPE (HDPE) NIGP CODE: 658-58 Polyethylene Pipe And Fitting		
DESCRIPTION	PRICE	
4"		LF
6"		LF
8"		LF
10"		LF
12"		LF
15"		LF
18"		LF
24"		LF
30"		LF
36"		LF
42"		LF
48"		LF
54"		LF
60"		LF

PLUMBING PIPES – 20 FOOT SECTIONS NIGP CODE: 967-60	
PVC	PRICE
½"	
1 ½"	
2"	
3"	
4"	

PLUMBING PIPES – 20 FOOT SECTIONS NIGP CODE: 967-60	
COPPER	PRICE
½"	
¾"	

CATEGORY (B) – INLETS

NIGP CODE: 210-31

INLETS, AREA, SEWER DRAIN, PRECAST, CONCRETE, STORM DRAIN, **NO BOTTOM FLOORS**

DESCRIPTION	PRICE																
	2'	2 ½'	3'	3 ½'	4'	4 ½'	5'	5 ½'	6'	6 ½'	7'	7 ½'	8'	8 ½'	9'	9 ½'	10'
Type "A" Inlet (5' x 3')																	
Type "A-1" Inlet (5' x 4')																	
Type "A-2" Inlet (5' x 5')																	
Type "A-3" Inlet (5' x 6')																	
Type "A" (SPL-1) Inlet (5' x 3')																	
Type "A-1" (SPL-1) Inlet (5' x 4')																	
Type "A-2" (SPL-1) Inlet (5' x 5')																	
Type "A-3" (SPL-1) Inlet (5' x 6')																	
TYPE "C" INLET 2' X 2'																	
TYPE "C" INLET 3' X 3'																	
TYPE "C" INLET 4' X 4'																	
TYPE "CC" INLET 5' x 3'																	

Type "F" Inlet (W=3')																
Type "F-1" Inlet (W=4')																
Type "F-2" Inlet (W=5')																
Type "F-3" Inlet (W=6')																
Type "F" (SPL-1) Inlet (W=3')																
Type "F-1" (SPL-1) Inlet (W=4')																
Type "F-2" (SPL-1) Inlet (W=5')																
Type "F-3" (SPL-1) Inlet (W=6')																

CATEGORY (C) – MANHOLES, NO BOTTOM FLOORS

NIGP CODE: 890-30

MANHOLES

DESCRIPTION	PRICE														
	3'	3 ½'	4'	4 ½'	5'	5 ½'	6'	6 ½'	7'	7 ½'	8'	8 ½'	9'	9 ½'	10'
TYPE "A" MANHOLE															
TYPE "A-1" MANHOLE															
TYPE "M" MANHOLE															

CATEGORY (D) – MISCELLANEOUS

DESCRIPTION		
WATER VALVE	UNIT	PRICE
2"	EA	
4"	EA	
6"	EA	
8"	EA	
10"	EA	
90 DEGREE ELBOW		
2"	EA	
4"	EA	
6"	EA	
8"	EA	
10"	EA	
45 DEGREE ELBOW		
2"	EA	
4"	EA	
6"	EA	
8"	EA	
10"	EA	
STEEL PIPE CASING WITH SPACERS		
4"	LF	
6"	LF	
12"	LF	
16"	LF	
24"	LF	
FIRE HYDRANT W/VALVE	EA	
PVC SCHEDULE 40 WATER LINE DR 18		
2"	LF	
8"	LF	
PVC SCHEDULE 40		
1.5"	LF	
0.75"	LF	
0.5"	LF	
WATER SADDLE W/2' CORPORATE VALVE		
8" x 2"	EA	

HP Dual Wall Marmac Couplers		
PIPE SIZE	**PRICE**	**UNIT**
12"		EA
15"		EA
18"		EA
24"		EA
30"		EA
36"		EA
42"		EA
48"		EA
60"		EA

HP Dual Wall Fabricated Tees		
PIPE SIZE	**PRICE**	**UNIT**
12"		EA
15"		EA
18"		EA
24"		EA
30"		EA
36"		EA
42"		EA
48"		EA
60"		EA

HP Dual Wall Fabricated Bends						
PIPE SIZE	**11.25 Bend**	**22.5 Bend**	**30* Bend**	**45* Bend**	**90* Bend**	**Unit**
12"						EA
15"						EA
18"						EA
24"						EA
30"						EA
36"						EA
42"						EA
48"						EA
60"						EA

EXHIBIT "B" – BID PAGE
Hidalgo County (All funding sources, programs & entities)
"PIPES & Related Miscellaneous Items"
RFB No.: 2017-046-04-05-FAZ

BIDDER/COMPANY NAME:_____

ADDRESS: _____

CITY: _____ **STATE:** _____ **ZIPCODE:**_____

PHONE No:_____ **FAX No:** _____ **CELL №**_____

AUTHORIZED SIGNATURE:_____

PRINTED NAME: _____

TITLE: _____ **DATE:**_____

EMAIL:_____

EXHIBIT "C"

INSURANCE REQUIREMENTS

REQUEST FOR BIDS

Hidalgo County

(All funding sources, programs & entities)

"Pipes & Related Miscellaneous Items"

RFB No.: 2017-046-04-05-FAZ

EXHIBIT "C"

Insurance Requirements
Applicable to the Acquisition of Goods and /or Services
(other than Professional Services)

The Bidder awarded the contract shall furnish proof of insurance, which will also include any subcontractor that is subcontracted by the bidder in at least the following limits, to be in place prior to providing any services under this Contract and to continue at all times in force in effect during the term of this Contract:

1. A Five Hundred Thousand Dollar ($500,000.00) Comprehensive General Liability insurance policy providing additional coverage to all underlying liabilities of County.

2. Automobile liability insurance policy with limits of at least Three Hundred Thousand Dollars ($300,000.00) per person and Five Hundred Thousand Dollars ($500,000.00) per occurrence. Coverage should include injury to or death of persons and property damage claims with limits up to Five Hundred Thousand ($500,000.00) arising out of the services provided to County hereunder.

3. Uninsured/Underinsured motorist coverage in an amount equal to the bodily injury limits set forth immediately above;

4. Workers compensation insurance in amounts established by Texas law, unless the Bidder is specifically exempted from the Texas Workers Compensation Act, Texas Labor Code Chapter 401, et. seq.

Hidalgo County will only accept certificates of insurance on an Acord form (as attached hereto). Certificates of insurance naming County as an **additional insured** shall be submitted to County for approval prior to any services being performed by Contractor. Each policy of insurance required hereunder shall extend for a period equivalent to, or longer than the term of the Contract, and any insurer hereunder shall be required to give at least thirty (30) days written notice to the County prior to the cancellation of any such coverage on the termination date, or otherwise. This Contract shall be automatically suspended upon the cancellation, or other termination, of any required policy of insurance hereunder, and such suspension shall continue until evidence adequate replacement coverage is provided to County. If replacement coverage is not provided within thirty (30) days following suspension of the Contract, this Contract shall automatically terminate.

ACORD CERTIFICATE OF INSURANCE

DATE (MM/DD/YY)

PRODUCER	THIS CERTIFICATE IS ISSUED AS A MATTER OF INFORMATION ONLY AND CONFERS NO RIGHTS UPON THE CERTIFICATE HOLDER. THIS CERTIFICATE DOES NOT AMEND, EXTEND OR ALTER THE COVERAGE AFFORDED BY THE POLICIES BELOW.
	INSURERS AFFORDING COVERAGE
INSURED	INSURER A:
	INSURER B:
	INSURER C:
	INSURER D:
	INSURER E:

COVERAGES

THE POLICIES OF INSURANCE LISTED BELOW HAVE BEEN ISSUED TO THE INSURED NAMED ABOVE FOR THE POLICY PERIOD INDICATED. NOTWITHSTANDING ANY REQUIREMENT, TERM OR CONDITION OF ANY CONTRACT OR OTHER DOCUMENT WITH RESPECT TO WHICH THIS CERTIFICATE MAY BE ISSUED OR MAY PERTAIN, THE INSURANCE AFFORDED BY THE POLICIES DESCRIBED HEREIN IS SUBJECT TO ALL THER TERMS, EXCLUSIONS AND CONDITIONS OF SUCH POLICIES. AGGREGATE LIMITS SHOWN MAY HAVE BEEN REDUCED BY PAID CLAIMS.

INSR LTR	TYPE OF INSURANCE	POLICY NUMBER	POLICY EFFECTIVE DATE (MM/DD/YY)	POLICY EXPIRATION DATE (MM/DD/YY)	LIMITS	
A	**GENERAL LIABILITY** ☐ COMMERCIAL GENERAL LIABILITY ☐☐ CLAIMS MADE OCCUR ☐ OWNER'S & CONT. PROT ☐ OWNER'S PROTECTIVE LIABILITY GEN'L AGGREGATE LIMIT APPLIES PER: ☐ POLICY PROJECT ☐ LOC				EACH OCCURRENCE FIRE DAMAGE (Any one fire) MED (Any one person) PERS & ADV INJURY AL AGGREGATE ODUCTS – COMP/OP GG	$ $ $ $ $ $
B	**AUTOMOBILE LIABILITY** ☐ ANY AUTO ☐ ALL OWNED AUTOS ☐ SCHEDULED AUTOS ☐ HIRED AUTOS ☐ NON-OWNED AUTOS				COMBINED SINGLE LIMIT (Ea accident) BODILY INJURY (Per person) BODILY INJURY (Per accident) PROPERTY DAMAGE (Per accident)	$ $ $ $
	GARAGE LIABILITY ☐ ANY AUTO				AUTO ONLY-EA ACCIDENT OTHER THAN AUTO ONLY EA ACC AGG	$ $ $
C	**EXCESS LIABILITY** ☐ OCCUR ☐ CLAIM DE ☐ DEDUCTIBLE ☐ RETENTION $				EACH OCCURENCE AGGREGATE	$ $ $ $ $
D	**WORKERS COMPENSATION AND EMPLOYER'S LIABILIT**				WC STATU- ☐ OTHER TORY LIMITS E.L. EACH ACCIDENT E.L. DISEASE-EA EMPLOYEE E.L. DISEASE-POLICY LIMIT	$ $ $
	OTHER					

DESCRIPTION OF OPERATIONS / LOCATION / VEHICLES / EXCLUSIONS ADDED BY ENDORSEMENT / SPECIAL PROVISIONS

County of Hidalgo shall be named as additional insured on all Commercial General Liability policies.

CERTIFICATE HOLDER	ADDITIONAL INSURED; INSURER LETTER: _____ CANCELLATION
Hidalgo County **Attn: Purchasing Department** **2812 S Highway Bus. 281** **Edinburg, Texas 78539**	SHOULD ANY OF THE ABOVE DESCRIBED POLICIES BY CANCELLED BEFORE THE EXPIRATION DATE THEREOF, THE ISSUING INSURER WILL ENDEAVOR TO MAIL ***30*** DAYS WRITTEN NOTICE TO THE CERTIFICATE HOLDER NAMED TO THE LEFT, BUT FAILURE TO DO SO SHALL IMPOSE NO OBLIGATION OR LIABILITY OF ANY KIND UPON THE INSURER, ITS AGENTS OR REPRESENTATIVES. AUTHORIZED REPRESENTATIVE

SAMPLE

Insurance Requirement Acknowledgment

I, _____, authorized representative for _____,
Company/Vendor

hereby acknowledge receipt of the County's required insurance limits. Said requirements:

- will be acquired within 10 working days after notification from Purchasing Department of bid awarded by the Hidalgo County Commissioners' Court;
- will acquire additional amounts required to meet the County's requirements within 10 working days after notification from Purchasing Department of bid award by the Hidalgo County Commissioners' Court; currently carry the following:

  Automobile Liability: $_____ General Liability: $_____
- have already been met, see attached copy of insurance certificate.

_____ _____.
Authorized Representative Date

Notice to Bidder:
A certificate of insurance for the required insurance limits shall be provided to the Purchasing Department's Contract Managers in order to qualify for award of bid and to execute a contract between your Company and the County

Failure to provide Certificates of Insurance to the Purchasing Department's Contract Managers will cause the bid award to be rescinded and re-awarded to next lowest bidder. Certificates of Insurance will be monitored and verified on a **quarterly basis** to ensure coverage policy is in place. It is the Company's obligation to maintain the appropriate insurance coverage throughout the term of the contract.

THIS FORM MUST ACCOMPANY BID PACKET

PROJECT REQUIREMENTS ACKNOWLEDGMENT

This is to certify that I, _____, possess all of the APPLICABLE:

1. Licenses: _____.
2. Bond (if applicable)_____
3. Certificates: _____.
4. Permits: _____.
5. Other: _____.

necessary to carry out the required project. Furthermore, I am providing copies of the required documentation so that, if my company is awarded this bid, I may be eligible to enter into a contract with Hidalgo County and proceed to complete the project in a timely manner.

* Any licenses, bonds (if applicable),certificates, permits, etc. which are required must be presented as part of the bid packet in order to expedite the bid evaluation process.

_____ _____.
Authorized Signature Date

_____.
Company

_____.
Address

_____.
City, State, Zip

THIS FORM MUST ACCOMPANY BID PACKET

EXHIBIT "D"

CIQ FORM
CONFLICT OF INTEREST QUESTIONNAIRE

REQUEST FOR BIDS

Hidalgo County

(All funding sources, programs & entities)

"Pipes & Related Miscellaneous Items"

RFB No.: 2017-046-04-05-FAZ

CONFLICT OF INTEREST QUESTIONNAIRE

FORM CIQ

For vendor doing business with local governmental entity

This questionnaire reflects changes made to the law by H.B. 23, 84th Leg., Regular Session.

This questionnaire is being filed in accordance with Chapter 176, Local Government Code, by a vendor who has a business relationship as defined by Section 176.001(1-a) with a local governmental entity and the vendor meets requirements under Section 176.006(a).

By law this questionnaire must be filed with the records administrator of the local governmental entity not later than the 7th business day after the date the vendor becomes aware of facts that require the statement to be filed. *See* Section 176.006(a-1), Local Government Code.

A vendor commits an offense if the vendor knowingly violates Section 176.006, Local Government Code. An offense under this section is a misdemeanor.

OFFICE USE ONLY

Date Received

1 **Name of vendor who has a business relationship with local governmental entity.**

2 ☐ **Check this box if you are filing an update to a previously filed questionnaire.** (The law requires that you file an updated completed questionnaire with the appropriate filing authority not later than the 7th business day after the date on which you became aware that the originally filed questionnaire was incomplete or inaccurate.)

3 **Name of local government officer about whom the information is being disclosed.**

_____

Name of Officer

4 **Describe each employment or other business relationship with the local government officer, or a family member of the officer, as described by Section 176.003(a)(2)(A). Also describe any family relationship with the local government officer. Complete subparts A and B for each employment or business relationship described. Attach additional pages to this Form CIQ as necessary.**

A. Is the local government officer or a family member of the officer receiving or likely to receive taxable income, other than investment income, from the vendor?

☐ Yes ☐ No

B. Is the vendor receiving or likely to receive taxable income, other than investment income, from or at the direction of the local government officer or a family member of the officer AND the taxable income is not received from the local governmental entity?

☐ Yes ☐ No

5 **Describe each employment or business relationship that the vendor named in Section 1 maintains with a corporation or other business entity with respect to which the local government officer serves as an officer or director, or holds an ownership interest of one percent or more.**

6 ☐ Check this box if the vendor has given the local government officer or a family member of the officer one or more gifts as described in Section 176.003(a)(2)(B), excluding gifts described in Section 176.003(a-1).

7

_____ _____

Signature of vendor doing business with the governmental entity Date

CONFLICT OF INTEREST QUESTIONNAIRE
For vendor doing business with local governmental entity

A complete copy of Chapter 176 of the Local Government Code may be found at http://www.statutes.legis.state.tx.us/Docs/LG/htm/LG.176.htm. For easy reference, below are some of the sections cited on this form.

Local Government Code § 176.001(1-a): "Business relationship" means a connection between two or more parties based on commercial activity of one of the parties. The term does not include a connection based on:

(A) a transaction that is subject to rate or fee regulation by a federal, state, or local governmental entity or an agency of a federal, state, or local governmental entity;

(B) a transaction conducted at a price and subject to terms available to the public; or

(C) a purchase or lease of goods or services from a person that is chartered by a state or federal agency and that is subject to regular examination by, and reporting to, that agency.

Local Government Code § 176.003(a)(2)(A) and (B):

(a) A local government officer shall file a conflicts disclosure statement with respect to a vendor if:

***

(2) the vendor:

(A) has an employment or other business relationship with the local government officer or a family member of the officer that results in the officer or family member receiving taxable income, other than investment income, that exceeds $2,500 during the 12-month period preceding the date that the officer becomes aware that

(i) a contract between the local governmental entity and vendor has been executed; or

(ii) the local governmental entity is considering entering into a contract with the vendor;

(B) has given to the local government officer or a family member of the officer one or more gifts that have an aggregate value of more than $100 in the 12-month period preceding the date the officer becomes aware that:

(i) a contract between the local governmental entity and vendor has been executed; or

(ii) the local governmental entity is considering entering into a contract with the vendor.

Local Government Code § 176.006(a) and (a-1)

(a) A vendor shall file a completed conflict of interest questionnaire if the vendor has a business relationship with a local governmental entity and:

(1) has an employment or other business relationship with a local government officer of that local governmental entity, or a family member of the officer, described by Section 176.003(a)(2)(A);

(2) has given a local government officer of that local governmental entity, or a family member of the officer, one or more gifts with the aggregate value specified by Section 176.003(a)(2)(B), excluding any gift described by Section 176.003(a-1); or

(3) has a family relationship with a local government officer of that local governmental entity.

(a-1) The completed conflict of interest questionnaire must be filed with the appropriate records administrator not later than the seventh business day after the later of:

(1) the date that the vendor:

(A) begins discussions or negotiations to enter into a contract with the local governmental entity; or

(B) submits to the local governmental entity an application, response to a request for proposals or bids, correspondence, or another writing related to a potential contract with the local governmental entity; or

(2) the date the vendor becomes aware:

(A) of an employment or other business relationship with a local government officer, or a family member of the officer, described by Subsection (a);

(B) that the vendor has given one or more gifts described by Subsection (a); or

(C) of a family relationship with a local government officer.

VENDOR'S APPLICATION & W-9 FORM

REQUEST FOR BIDS

Hidalgo County

(All funding sources, programs & entities)

"Pipes & Related Miscellaneous Items"

RFB No.: 2017-046-04-05-FAZ

HIDALGO COUNTY
PURCHASING DEPARTMENT
Bidder/Vendor Application

Complete in print or type. Please return this application to the Hidalgo County Purchasing Department thru Facsimile: (956) 318-2629 or (956) 292-7612 in person or regular mail to: 2812 S. Business Hwy. 281 , Edinburg, Texas 78539 or email: purchasing@co.hidalgo.tx.us

Company Name: **Telephone No. ( )**
dba Name:
Legal Name:
Mailing Address : **Fax No. ( )**
Physical Address:
City, State, Zip **Tax I.D. No.**
Remit to Address : **City, State, Zip**
E-Mail Address:
Representative(s) Name(s) & Title(s)
Type of Organization (check one): _____ Individual _____ Partnership _____ Corporation _____Non-Profit _____ LLC _____ Sole Proprietor _____ Other, Specify **State Identification No._____ (Please attached completed W-9 form with this application)** **Federal Identification No. or (if individual) SS No.**
State of Incorporation: _____ Date:_____ Other:
Type of Business (check one): _____ Manufacturer _____ Wholesaler _____ Retailer _____ Broker _____ Distributor _____ Service Organization _____ Other, Specify
Name & Title of Person(s) Authorized to Sign Bids, Proposals, and/or Contracts:
Small and/or Disadvantaged Business Information (check application criteria) **Small Business:_____Disadvantaged Business (At Least 51% Ownership)** ☐ Less than 125,000 annual gross receipt ☐ Black American ☐ Native American ☐ Less than 250,000 annual gross receipt ☐ Hispanic American ☐ Women ☐ Less than 499,000 annual gross receipt ☐ Asian Pacific American ☐ Other ☐ More than 500,000 annual gross receipt **Have you been certified as a HUB or an MBE/WBE source?:** ☐ Yes ☐ No **Indicate Certification No.(s):_____ or are Certificate(s) attached?:** ☐ Yes ☐ No
What type of product(s) is/are solicited by your company?: **Would you like to be provided with specifications for procurements of such products?:** ☐ Yes ☐ No
To Be Completed by the County: Rec'd by (Purchasing):_____ Date Rec'd by (Purchasing): **Date Forwarded Information to Auditor's Office:_____Entry Date: _____ Vendor No.:**

Revised12/14/06

HISTORICALLY UNDERUTILIZED BUSINESS (HUB) DECLARATION

The primary objective of the Hidalgo County HUB Program is to ensure Historically Underutilized Businesses receive a fair and equal opportunity for participation in the County's procurement process. This fact holds true for Services (Professional & Non-Professional), Commodities, and Construction contracts and any subcontracts thereto. The program strongly encourages Prime Contractors to provide subcontracting opportunities to Certified Hub Contractors/Vendors. Our goal for HUB contractor/vendor participation, as well as HUB subcontractor participation is 30%. To be considered as a "Certified HUB Contractor/Vendor" the contractor/vendor must have been certified by, and hold a current and valid certification with any of the three agencies listed below.

Have you been Certified as a HUB or an MBE/WBE source?: ☐Yes ☐ No

If yes, by whom?: ☐ Texas Building & Procurement Commission ☐ Other_____

Indicate Certification No(s).:_____ or Are Certificate(s) Attached?: ☐ Yes ☐ No

---

LIST OF CERTIFIED HUB SUBCONTRACTORS

(Attach additional pages if necessary)

What percentage of the Bid, RFP,or RFQ is to be subcontracted with Certified HUB sources?: _____%
(List HUB Subcontractor information below).

HUB Subcontractor Name: _____ HUB Status:
Certifying Agency (Check all applicable): ☐Texas Building & Procurement Commission ☐ Other
Address: _____ City: _____ State: _____ Zip:
Contact Person: _____ Title: _____ Phone No.: ( )
Subcontract Amount: $_____ Description of Work to be Performed:

HUB Subcontractor Name: _____ HUB Status:
Certifying Agency (Check all applicable): ☐Texas Building & Procurement Commission ☐ Other
Address: _____ City: _____ State: _____ Zip:
Contact Person: _____ Title: _____ Phone No.: ( )
Subcontract Amount: $_____ Description of Work to be Performed:

HUB Subcontractor Name: _____ HUB Status:
Certifying Agency (Check all applicable): ☐Texas Building & Procurement Commission ☐ Other
Address: _____ City: _____ State: _____ Zip:
Contact Person: _____ Title: _____ Phone No.: ( )
Subcontract Amount: $_____ Description of Work to be Performed:

Form **W-9**
(Rev. December 2014)
Department of the Treasury
Internal Revenue Service

Request for Taxpayer Identification Number and Certification

Give Form to the requester. Do not send to the IRS.

Print or type
See Specific Instructions on page 2.

1 Name (as shown on your income tax return). Name is required on this line; do not leave this line blank.

2 Business name/disregarded entity name, if different from above

3 Check appropriate box for federal tax classification; check only **one** of the following seven boxes:

☐ Individual/sole proprietor or single-member LLC ☐ C Corporation ☐ S Corporation ☐ Partnership ☐ Trust/estate

☐ Limited liability company. Enter the tax classification (C=C corporation, S=S corporation, P=partnership) ▶ _____

Note. For a single-member LLC that is disregarded, do not check LLC; check the appropriate box in the line above for the tax classification of the single-member owner.

☐ Other (see instructions) ▶

4 Exemptions (codes apply only to certain entities, not individuals; see instructions on page 3):

Exempt payee code (if any) _____

Exemption from FATCA reporting code (if any) _____

(Applies to accounts maintained outside the U.S.)

5 Address (number, street, and apt. or suite no.)

Requester's name and address (optional)

6 City, state, and ZIP code

7 List account number(s) here (optional)

Part I Taxpayer Identification Number (TIN)

Enter your TIN in the appropriate box. The TIN provided must match the name given on line 1 to avoid backup withholding. For individuals, this is generally your social security number (SSN). However, for a resident alien, sole proprietor, or disregarded entity, see the Part I instructions on page 3. For other entities, it is your employer identification number (EIN). If you do not have a number, see *How to get a TIN* on page 3.

Note. If the account is in more than one name, see the instructions for line 1 and the chart on page 4 for guidelines on whose number to enter.

Social security number

			–		–				

or

Employer identification number

		–							

Part II Certification

Under penalties of perjury, I certify that:

1. The number shown on this form is my correct taxpayer identification number (or I am waiting for a number to be issued to me); and
2. I am not subject to backup withholding because: (a) I am exempt from backup withholding, or (b) I have not been notified by the Internal Revenue Service (IRS) that I am subject to backup withholding as a result of a failure to report all interest or dividends, or (c) the IRS has notified me that I am no longer subject to backup withholding; and
3. I am a U.S. citizen or other U.S. person (defined below); and
4. The FATCA code(s) entered on this form (if any) indicating that I am exempt from FATCA reporting is correct.

Certification instructions. You must cross out item 2 above if you have been notified by the IRS that you are currently subject to backup withholding because you have failed to report all interest and dividends on your tax return. For real estate transactions, item 2 does not apply. For mortgage interest paid, acquisition or abandonment of secured property, cancellation of debt, contributions to an individual retirement arrangement (IRA), and generally, payments other than interest and dividends, you are not required to sign the certification, but you must provide your correct TIN. See the instructions on page 3.

Sign Here | **Signature of U.S. person** ▶ | **Date** ▶

General Instructions

Section references are to the Internal Revenue Code unless otherwise noted.

Future developments. Information about developments affecting Form W-9 (such as legislation enacted after we release it) is at *www.irs.gov/fw9*.

Purpose of Form

An individual or entity (Form W-9 requester) who is required to file an information return with the IRS must obtain your correct taxpayer identification number (TIN) which may be your social security number (SSN), individual taxpayer identification number (ITIN), adoption taxpayer identification number (ATIN), or employer identification number (EIN), to report on an information return the amount paid to you, or other amount reportable on an information return. Examples of information returns include, but are not limited to, the following:

- Form 1099-INT (interest earned or paid)
- Form 1099-DIV (dividends, including those from stocks or mutual funds)
- Form 1099-MISC (various types of income, prizes, awards, or gross proceeds)
- Form 1099-B (stock or mutual fund sales and certain other transactions by brokers)
- Form 1099-S (proceeds from real estate transactions)
- Form 1099-K (merchant card and third party network transactions)
- Form 1098 (home mortgage interest), 1098-E (student loan interest), 1098-T (tuition)
- Form 1099-C (canceled debt)
- Form 1099-A (acquisition or abandonment of secured property)

Use Form W-9 only if you are a U.S. person (including a resident alien), to provide your correct TIN.

If you do not return Form W-9 to the requester with a TIN, you might be subject to backup withholding. See *What is backup withholding?* on page 2.

By signing the filled-out form, you:

1. Certify that the TIN you are giving is correct (or you are waiting for a number to be issued),
2. Certify that you are not subject to backup withholding, or
3. Claim exemption from backup withholding if you are a U.S. exempt payee. If applicable, you are also certifying that as a U.S. person, your allocable share of any partnership income from a U.S. trade or business is not subject to the withholding tax on foreign partners' share of effectively connected income, and
4. Certify that FATCA code(s) entered on this form (if any) indicating that you are exempt from the FATCA reporting, is correct. See *What is FATCA reporting?* on page 2 for further information.

Note. If you are a U.S. person and a requester gives you a form other than Form W-9 to request your TIN, you must use the requester's form if it is substantially similar to this Form W-9.

Definition of a U.S. person. For federal tax purposes, you are considered a U.S. person if you are:

- An individual who is a U.S. citizen or U.S. resident alien;
- A partnership, corporation, company, or association created or organized in the United States or under the laws of the United States;
- An estate (other than a foreign estate); or
- A domestic trust (as defined in Regulations section 301.7701-7).

Special rules for partnerships. Partnerships that conduct a trade or business in the United States are generally required to pay a withholding tax under section 1446 on any foreign partners' share of effectively connected taxable income from such business. Further, in certain cases where a Form W-9 has not been received, the rules under section 1446 require a partnership to presume that a partner is a foreign person, and pay the section 1446 withholding tax. Therefore, if you are a U.S. person that is a partner in a partnership conducting a trade or business in the United States, provide Form W-9 to the partnership to establish your U.S. status and avoid section 1446 withholding on your share of partnership income.

In the cases below, the following person must give Form W-9 to the partnership for purposes of establishing its U.S. status and avoiding withholding on its allocable share of net income from the partnership conducting a trade or business in the United States:

- In the case of a disregarded entity with a U.S. owner, the U.S. owner of the disregarded entity and not the entity;
- In the case of a grantor trust with a U.S. grantor or other U.S. owner, generally, the U.S. grantor or other U.S. owner of the grantor trust and not the trust; and
- In the case of a U.S. trust (other than a grantor trust), the U.S. trust (other than a grantor trust) and not the beneficiaries of the trust.

Foreign person. If you are a foreign person or the U.S. branch of a foreign bank that has elected to be treated as a U.S. person, do not use Form W-9. Instead, use the appropriate Form W-8 or Form 8233 (see Publication 515, Withholding of Tax on Nonresident Aliens and Foreign Entities).

Nonresident alien who becomes a resident alien. Generally, only a nonresident alien individual may use the terms of a tax treaty to reduce or eliminate U.S. tax on certain types of income. However, most tax treaties contain a provision known as a "saving clause." Exceptions specified in the saving clause may permit an exemption from tax to continue for certain types of income even after the payee has otherwise become a U.S. resident alien for tax purposes.

If you are a U.S. resident alien who is relying on an exception contained in the saving clause of a tax treaty to claim an exemption from U.S. tax on certain types of income, you must attach a statement to Form W-9 that specifies the following five items:

1. The treaty country. Generally, this must be the same treaty under which you claimed exemption from tax as a nonresident alien.
2. The treaty article addressing the income.
3. The article number (or location) in the tax treaty that contains the saving clause and its exceptions.
4. The type and amount of income that qualifies for the exemption from tax.
5. Sufficient facts to justify the exemption from tax under the terms of the treaty article.

Example. Article 20 of the U.S.-China income tax treaty allows an exemption from tax for scholarship income received by a Chinese student temporarily present in the United States. Under U.S. law, this student will become a resident alien for tax purposes if his or her stay in the United States exceeds 5 calendar years. However, paragraph 2 of the first Protocol to the U.S.-China treaty (dated April 30, 1984) allows the provisions of Article 20 to continue to apply even after the Chinese student becomes a resident alien of the United States. A Chinese student who qualifies for this exception (under paragraph 2 of the first protocol) and is relying on this exception to claim an exemption from tax on his or her scholarship or fellowship income would attach to Form W-9 a statement that includes the information described above to support that exemption.

If you are a nonresident alien or a foreign entity, give the requester the appropriate completed Form W-8 or Form 8233.

Backup Withholding

What is backup withholding? Persons making certain payments to you must under certain conditions withhold and pay to the IRS 28% of such payments. This is called "backup withholding." Payments that may be subject to backup withholding include interest, tax-exempt interest, dividends, broker and barter exchange transactions, rents, royalties, nonemployee pay, payments made in settlement of payment card and third party network transactions, and certain payments from fishing boat operators. Real estate transactions are not subject to backup withholding.

You will not be subject to backup withholding on payments you receive if you give the requester your correct TIN, make the proper certifications, and report all your taxable interest and dividends on your tax return.

Payments you receive will be subject to backup withholding if:

1. You do not furnish your TIN to the requester,
2. You do not certify your TIN when required (see the Part II instructions on page 3 for details),
3. The IRS tells the requester that you furnished an incorrect TIN,
4. The IRS tells you that you are subject to backup withholding because you did not report all your interest and dividends on your tax return (for reportable interest and dividends only), or
5. You do not certify to the requester that you are not subject to backup withholding under 4 above (for reportable interest and dividend accounts opened after 1983 only).

Certain payees and payments are exempt from backup withholding. See *Exempt payee code* on page 3 and the separate Instructions for the Requester of Form W-9 for more information.

Also see *Special rules for partnerships* above.

What is FATCA reporting?

The Foreign Account Tax Compliance Act (FATCA) requires a participating foreign financial institution to report all United States account holders that are specified United States persons. Certain payees are exempt from FATCA reporting. See *Exemption from FATCA reporting code* on page 3 and the Instructions for the Requester of Form W-9 for more information.

Updating Your Information

You must provide updated information to any person to whom you claimed to be an exempt payee if you are no longer an exempt payee and anticipate receiving reportable payments in the future from this person. For example, you may need to provide updated information if you are a C corporation that elects to be an S corporation, or if you no longer are tax exempt. In addition, you must furnish a new Form W-9 if the name or TIN changes for the account; for example, if the grantor of a grantor trust dies.

Penalties

Failure to furnish TIN. If you fail to furnish your correct TIN to a requester, you are subject to a penalty of $50 for each such failure unless your failure is due to reasonable cause and not to willful neglect.

Civil penalty for false information with respect to withholding. If you make a false statement with no reasonable basis that results in no backup withholding, you are subject to a $500 penalty.

Criminal penalty for falsifying information. Willfully falsifying certifications or affirmations may subject you to criminal penalties including fines and/or imprisonment.

Misuse of TINs. If the requester discloses or uses TINs in violation of federal law, the requester may be subject to civil and criminal penalties.

Specific Instructions

Line 1

You must enter one of the following on this line; **do not** leave this line blank. The name should match the name on your tax return.

If this Form W-9 is for a joint account, list first, and then circle, the name of the person or entity whose number you entered in Part I of Form W-9.

a. **Individual.** Generally, enter the name shown on your tax return. If you have changed your last name without informing the Social Security Administration (SSA) of the name change, enter your first name, the last name as shown on your social security card, and your new last name.

Note. ITIN applicant: Enter your individual name as it was entered on your Form W-7 application, line 1a. This should also be the same as the name you entered on the Form 1040/1040A/1040EZ you filed with your application.

b. **Sole proprietor or single-member LLC.** Enter your individual name as shown on your 1040/1040A/1040EZ on line 1. You may enter your business, trade, or "doing business as" (DBA) name on line 2.

c. **Partnership, LLC that is not a single-member LLC, C Corporation, or S Corporation.** Enter the entity's name as shown on the entity's tax return on line 1 and any business, trade, or DBA name on line 2.

d. **Other entities.** Enter your name as shown on required U.S. federal tax documents on line 1. This name should match the name shown on the charter or other legal document creating the entity. You may enter any business, trade, or DBA name on line 2.

e. **Disregarded entity.** For U.S. federal tax purposes, an entity that is disregarded as an entity separate from its owner is treated as a "disregarded entity." See Regulations section 301.7701-2(c)(2)(iii). Enter the owner's name on line 1. The name of the entity entered on line 1 should never be a disregarded entity. The name on line 1 should be the name shown on the income tax return on which the income should be reported. For example, if a foreign LLC that is treated as a disregarded entity for U.S. federal tax purposes has a single owner that is a U.S. person, the U.S. owner's name is required to be provided on line 1. If the direct owner of the entity is also a disregarded entity, enter the first owner that is not disregarded for federal tax purposes. Enter the disregarded entity's name on line 2, "Business name/disregarded entity name." If the owner of the disregarded entity is a foreign person, the owner must complete an appropriate Form W-8 instead of a Form W-9. This is the case even if the foreign person has a U.S. TIN.

Line 2

If you have a business name, trade name, DBA name, or disregarded entity name, you may enter it on line 2.

Line 3

Check the appropriate box in line 3 for the U.S. federal tax classification of the person whose name is entered on line 1. Check only one box in line 3.

Limited Liability Company (LLC). If the name on line 1 is an LLC treated as a partnership for U.S. federal tax purposes, check the "Limited Liability Company" box and enter "P" in the space provided. If the LLC has filed Form 8832 or 2553 to be taxed as a corporation, check the "Limited Liability Company" box and in the space provided enter "C" for C corporation or "S" for S corporation. If it is a single-member LLC that is a disregarded entity, do not check the "Limited Liability Company" box; instead check the first box in line 3 "Individual/sole proprietor or single-member LLC."

Line 4, Exemptions

If you are exempt from backup withholding and/or FATCA reporting, enter in the appropriate space in line 4 any code(s) that may apply to you.

Exempt payee code.

- Generally, individuals (including sole proprietors) are not exempt from backup withholding.
- Except as provided below, corporations are exempt from backup withholding for certain payments, including interest and dividends.
- Corporations are not exempt from backup withholding for payments made in settlement of payment card or third party network transactions.
- Corporations are not exempt from backup withholding with respect to attorneys' fees or gross proceeds paid to attorneys, and corporations that provide medical or health care services are not exempt with respect to payments reportable on Form 1099-MISC.

The following codes identify payees that are exempt from backup withholding. Enter the appropriate code in the space in line 4.

1—An organization exempt from tax under section 501(a), any IRA, or a custodial account under section 403(b)(7) if the account satisfies the requirements of section 401(f)(2)

2—The United States or any of its agencies or instrumentalities

3—A state, the District of Columbia, a U.S. commonwealth or possession, or any of their political subdivisions or instrumentalities

4—A foreign government or any of its political subdivisions, agencies, or instrumentalities

5—A corporation

6—A dealer in securities or commodities required to register in the United States, the District of Columbia, or a U.S. commonwealth or possession

7—A futures commission merchant registered with the Commodity Futures Trading Commission

8—A real estate investment trust

9—An entity registered at all times during the tax year under the Investment Company Act of 1940

10—A common trust fund operated by a bank under section 584(a)

11—A financial institution

12—A middleman known in the investment community as a nominee or custodian

13—A trust exempt from tax under section 664 or described in section 4947

The following chart shows types of payments that may be exempt from backup withholding. The chart applies to the exempt payees listed above, 1 through 13.

IF the payment is for . . .	THEN the payment is exempt for . . .
Interest and dividend payments	All exempt payees except for 7
Broker transactions	Exempt payees 1 through 4 and 6 through 11 and all C corporations. S corporations must not enter an exempt payee code because they are exempt only for sales of noncovered securities acquired prior to 2012.
Barter exchange transactions and patronage dividends	Exempt payees 1 through 4
Payments over $600 required to be reported and direct sales over $5,000[1]	Generally, exempt payees 1 through 5[2]
Payments made in settlement of payment card or third party network transactions	Exempt payees 1 through 4

[1] See Form 1099-MISC, Miscellaneous Income, and its instructions.

[2] However, the following payments made to a corporation and reportable on Form 1099-MISC are not exempt from backup withholding: medical and health care payments, attorneys' fees, gross proceeds paid to an attorney reportable under section 6045(f), and payments for services paid by a federal executive agency.

Exemption from FATCA reporting code. The following codes identify payees that are exempt from reporting under FATCA. These codes apply to persons submitting this form for accounts maintained outside of the United States by certain foreign financial institutions. Therefore, if you are only submitting this form for an account you hold in the United States, you may leave this field blank. Consult with the person requesting this form if you are uncertain if the financial institution is subject to these requirements. A requester may indicate that a code is not required by providing you with a Form W-9 with "Not Applicable" (or any similar indication) written or printed on the line for a FATCA exemption code.

A—An organization exempt from tax under section 501(a) or any individual retirement plan as defined in section 7701(a)(37)

B—The United States or any of its agencies or instrumentalities

C—A state, the District of Columbia, a U.S. commonwealth or possession, or any of their political subdivisions or instrumentalities

D—A corporation the stock of which is regularly traded on one or more established securities markets, as described in Regulations section 1.1472-1(c)(1)(i)

E—A corporation that is a member of the same expanded affiliated group as a corporation described in Regulations section 1.1472-1(c)(1)(i)

F—A dealer in securities, commodities, or derivative financial instruments (including notional principal contracts, futures, forwards, and options) that is registered as such under the laws of the United States or any state

G—A real estate investment trust

H—A regulated investment company as defined in section 851 or an entity registered at all times during the tax year under the Investment Company Act of 1940

I—A common trust fund as defined in section 584(a)

J—A bank as defined in section 581

K—A broker

L—A trust exempt from tax under section 664 or described in section 4947(a)(1)

M—A tax exempt trust under a section 403(b) plan or section 457(g) plan

Note. You may wish to consult with the financial institution requesting this form to determine whether the FATCA code and/or exempt payee code should be completed.

Line 5

Enter your address (number, street, and apartment or suite number). This is where the requester of this Form W-9 will mail your information returns.

Line 6

Enter your city, state, and ZIP code.

Part I. Taxpayer Identification Number (TIN)

Enter your TIN in the appropriate box. If you are a resident alien and you do not have and are not eligible to get an SSN, your TIN is your IRS individual taxpayer identification number (ITIN). Enter it in the social security number box. If you do not have an ITIN, see *How to get a TIN* below.

If you are a sole proprietor and you have an EIN, you may enter either your SSN or EIN. However, the IRS prefers that you use your SSN.

If you are a single-member LLC that is disregarded as an entity separate from its owner (see *Limited Liability Company (LLC)* on this page), enter the owner's SSN (or EIN, if the owner has one). Do not enter the disregarded entity's EIN. If the LLC is classified as a corporation or partnership, enter the entity's EIN.

Note. See the chart on page 4 for further clarification of name and TIN combinations.

How to get a TIN. If you do not have a TIN, apply for one immediately. To apply for an SSN, get Form SS-5, Application for a Social Security Card, from your local SSA office or get this form online at *www.ssa.gov*. You may also get this form by calling 1-800-772-1213. Use Form W-7, Application for IRS Individual Taxpayer Identification Number, to apply for an ITIN, or Form SS-4, Application for Employer Identification Number, to apply for an EIN. You can apply for an EIN online by accessing the IRS website at *www.irs.gov/businesses* and clicking on Employer Identification Number (EIN) under Starting a Business. You can get Forms W-7 and SS-4 from the IRS by visiting IRS.gov or by calling 1-800-TAX-FORM (1-800-829-3676).

If you are asked to complete Form W-9 but do not have a TIN, apply for a TIN and write "Applied For" in the space for the TIN, sign and date the form, and give it to the requester. For interest and dividend payments, and certain payments made with respect to readily tradable instruments, generally you will have 60 days to get a TIN and give it to the requester before you are subject to backup withholding on payments. The 60-day rule does not apply to other types of payments. You will be subject to backup withholding on all such payments until you provide your TIN to the requester.

Note. Entering "Applied For" means that you have already applied for a TIN or that you intend to apply for one soon.

Caution: *A disregarded U.S. entity that has a foreign owner must use the appropriate Form W-8.*

Part II. Certification

To establish to the withholding agent that you are a U.S. person, or resident alien, sign Form W-9. You may be requested to sign by the withholding agent even if items 1, 4, or 5 below indicate otherwise.

For a joint account, only the person whose TIN is shown in Part I should sign (when required). In the case of a disregarded entity, the person identified on line 1 must sign. Exempt payees, see *Exempt payee code* earlier.

Signature requirements. Complete the certification as indicated in items 1 through 5 below.

1. Interest, dividend, and barter exchange accounts opened before 1984 and broker accounts considered active during 1983. You must give your correct TIN, but you do not have to sign the certification.

2. Interest, dividend, broker, and barter exchange accounts opened after 1983 and broker accounts considered inactive during 1983. You must sign the certification or backup withholding will apply. If you are subject to backup withholding and you are merely providing your correct TIN to the requester, you must cross out item 2 in the certification before signing the form.

3. Real estate transactions. You must sign the certification. You may cross out item 2 of the certification.

4. Other payments. You must give your correct TIN, but you do not have to sign the certification unless you have been notified that you have previously given an incorrect TIN. "Other payments" include payments made in the course of the requester's trade or business for rents, royalties, goods (other than bills for merchandise), medical and health care services (including payments to corporations), payments to a nonemployee for services, payments made in settlement of payment card and third party network transactions, payments to certain fishing boat crew members and fishermen, and gross proceeds paid to attorneys (including payments to corporations).

5. Mortgage interest paid by you, acquisition or abandonment of secured property, cancellation of debt, qualified tuition program payments (under section 529), IRA, Coverdell ESA, Archer MSA or HSA contributions or distributions, and pension distributions. You must give your correct TIN, but you do not have to sign the certification.

What Name and Number To Give the Requester

For this type of account:	Give name and SSN of:
1. Individual	The individual
2. Two or more individuals (joint account)	The actual owner of the account or, if combined funds, the first individual on the account[1]
3. Custodian account of a minor (Uniform Gift to Minors Act)	The minor[2]
4. a. The usual revocable savings trust (grantor is also trustee) b. So-called trust account that is not a legal or valid trust under state law	The grantor-trustee[1] The actual owner[1]
5. Sole proprietorship or disregarded entity owned by an individual	The owner[3]
6. Grantor trust filing under Optional Form 1099 Filing Method 1 (see Regulations section 1.671-4(b)(2)(i)(A))	The grantor*
For this type of account:	**Give name and EIN of:**
7. Disregarded entity not owned by an individual	The owner
8. A valid trust, estate, or pension trust	Legal entity[4]
9. Corporation or LLC electing corporate status on Form 8832 or Form 2553	The corporation
10. Association, club, religious, charitable, educational, or other tax-exempt organization	The organization
11. Partnership or multi-member LLC	The partnership
12. A broker or registered nominee	The broker or nominee
13. Account with the Department of Agriculture in the name of a public entity (such as a state or local government, school district, or prison) that receives agricultural program payments	The public entity
14. Grantor trust filing under the Form 1041 Filing Method or the Optional Form 1099 Filing Method 2 (see Regulations section 1.671-4(b)(2)(i)(B))	The trust

[1] List first and circle the name of the person whose number you furnish. If only one person on a joint account has an SSN, that person's number must be furnished.

[2] Circle the minor's name and furnish the minor's SSN.

[3] You must show your individual name and you may also enter your business or DBA name on the "Business name/disregarded entity" name line. You may use either your SSN or EIN (if you have one), but the IRS encourages you to use your SSN.

[4] List first and circle the name of the trust, estate, or pension trust. (Do not furnish the TIN of the personal representative or trustee unless the legal entity itself is not designated in the account title.) Also see *Special rules for partnerships* on page 2.

*Note. Grantor also must provide a Form W-9 to trustee of trust.

Note. If no name is circled when more than one name is listed, the number will be considered to be that of the first name listed.

Secure Your Tax Records from Identity Theft

Identity theft occurs when someone uses your personal information such as your name, SSN, or other identifying information, without your permission, to commit fraud or other crimes. An identity thief may use your SSN to get a job or may file a tax return using your SSN to receive a refund.

To reduce your risk:

- Protect your SSN,
- Ensure your employer is protecting your SSN, and
- Be careful when choosing a tax preparer.

If your tax records are affected by identity theft and you receive a notice from the IRS, respond right away to the name and phone number printed on the IRS notice or letter.

If your tax records are not currently affected by identity theft but you think you are at risk due to a lost or stolen purse or wallet, questionable credit card activity or credit report, contact the IRS Identity Theft Hotline at 1-800-908-4490 or submit Form 14039.

For more information, see Publication 4535, Identity Theft Prevention and Victim Assistance.

Victims of identity theft who are experiencing economic harm or a system problem, or are seeking help in resolving tax problems that have not been resolved through normal channels, may be eligible for Taxpayer Advocate Service (TAS) assistance. You can reach TAS by calling the TAS toll-free case intake line at 1-877-777-4778 or TTY/TDD 1-800-829-4059.

Protect yourself from suspicious emails or phishing schemes. Phishing is the creation and use of email and websites designed to mimic legitimate business emails and websites. The most common act is sending an email to a user falsely claiming to be an established legitimate enterprise in an attempt to scam the user into surrendering private information that will be used for identity theft.

The IRS does not initiate contacts with taxpayers via emails. Also, the IRS does not request personal detailed information through email or ask taxpayers for the PIN numbers, passwords, or similar secret access information for their credit card, bank, or other financial accounts.

If you receive an unsolicited email claiming to be from the IRS, forward this message to *phishing@irs.gov*. You may also report misuse of the IRS name, logo, or other IRS property to the Treasury Inspector General for Tax Administration (TIGTA) at 1-800-366-4484. You can forward suspicious emails to the Federal Trade Commission at: *spam@uce.gov* or contact them at *www.ftc.gov/idtheft* or 1-877-IDTHEFT (1-877-438-4338).

Visit IRS.gov to learn more about identity theft and how to reduce your risk.

Privacy Act Notice

Section 6109 of the Internal Revenue Code requires you to provide your correct TIN to persons (including federal agencies) who are required to file information returns with the IRS to report interest, dividends, or certain other income paid to you; mortgage interest you paid; the acquisition or abandonment of secured property; the cancellation of debt; or contributions you made to an IRA, Archer MSA, or HSA. The person collecting this form uses the information on the form to file information returns with the IRS, reporting the above information. Routine uses of this information include giving it to the Department of Justice for civil and criminal litigation and to cities, states, the District of Columbia, and U.S. commonwealths and possessions for use in administering their laws. The information also may be disclosed to other countries under a treaty, to federal and state agencies to enforce civil and criminal laws, or to federal law enforcement and intelligence agencies to combat terrorism. You must provide your TIN whether or not you are required to file a tax return. Under section 3406, payers must generally withhold a percentage of taxable interest, dividend, and certain other payments to a payee who does not give a TIN to the payer. Certain penalties may also apply for providing false or fraudulent information.

CERTIFICATION REGARDING DEBARMENT

REQUEST FOR BIDS

Hidalgo County

(All funding sources, programs & entities)

"Pipes & Related Miscellaneous Items"

RFB No.: 2017-046-04-05-FAZ

Certification
Regarding Debarment, Suspension and Ineligibility

As is required by the Federal Regulations Implementing Executive Order 12549, Debarment and Suspension, 45 CFR Part 76, Government-wide Debarment and Suspension, the applicant certifies, to the best of his or her knowledge and belief, that both it and its principals:

a. Are not presently debarred, suspended, proposed for debarment, declared ineligible, or voluntarily excluded from participation in this transaction by any federal department or agency;

b. Have not within a three-year period preceding this bid proposal and/or application been convicted of or had a civil judgment rendered against them for commission of fraud or a criminal offense in connection with obtaining, attempting to obtain, or performing a public (federal, state, or local) transaction or contract under a public transaction, violation of federal or state antitrust statutes or commission of embezzlement, theft, forgery, bribery, falsification or destruction of records, making false statements, or receiving stolen property;

c. Are not presently indicted for or otherwise criminally or civilly charged by a government entity with commission of any of the offenses enumerated herein; and

d. Have not within a three-year period preceding this bid proposal and/or application had one or more public transactions terminated for cause or default.

Signature:_____
Print Name:_____
Title:_____
Telephone Number:_____
Date:_____

If the bidder is unable to certify to all of the statements in this Certification, such bidder should attach an explanation to this proposal.

EXHIBIT "G"

APPENDICES

APPENDIX A

During the performance of this contract, the contractor, for itself, its assignees, and successors in interest (hereinafter referred to as the "contractor") agrees as follows:

1. **Compliance with Regulations**: The contractor (hereinafter includes consultants)will comply with the Acts and the Regulations relative to Nondiscrimination in Federally-assisted programs of the U.S. Department of Transportation, the Federal Highway Administration, as they may be amended from time to time, which are herein incorporated by reference and made a part of this contract.

2. **Nondiscrimination**: The contractor, with regard to the work performed by it during the contract, will not discriminate on the grounds of race, color, or national origin in the selection and retention of subcontractors, including procurements of materials and leases of equipment. The contractor will not participate directly or indirectly in the discrimination prohibited by the Acts and the Regulations, including employment practices when the contract covers any activity, project, or program set forth in Appendix B of49 CFR Part 21.

3. **Solicitations for Subcontracts, Including Procurements of Materials and Equipment**: In all solicitations, either by competitive bidding, or negotiation made by the contractor for work to be performed under a subcontract, including procurements of materials, or leases of equipment, each potential subcontractor or supplier will be notified by the contractor of the contractor's obligations under this contract and the Acts and the Regulations relative to Nondiscrimination on the grounds of race, color, or national origin.

4. **Information and Reports**: The contractor will provide all information and reports required by the Acts, the Regulations, and directives issued pursuant thereto and will permit access to its books, records, accounts, other sources of information, and its facilities as may be determined by the Recipient or the Federal Highway Administration to be pertinent to ascertain compliance with such Acts, Regulations, and instructions. Where any information required of a contractor is in the exclusive possession of another who fails or refuses to furnish the information, the contractor will so certify to the Recipient or the Federal Highway Administration, as appropriate, and will set forth what efforts it has made to obtain the information.

5. **Sanctions for Noncompliance**: In the event of a contractor's noncompliance with the Nondiscrimination provisions of this contract, the Recipient will impose such contract sanctions as it or the Federal Highway Administration may determine to be appropriate, including, but not limited to:

   a. withholding payments to the contractor under the contract until the contractor complies; and/or
   b. cancelling, terminating, or suspending contract, in whole or in part.

6. **Incorporation of Provisions**: The contractor will include the provisions of paragraphs one through six in every subcontract, including procurements of materials and leases of equipment, unless exempt by the Acts, the Regulations and directives issued pursuant thereto. The contractor will take action with respect to any subcontract or procurement as the Recipient or the Federal Highway Administration may direct as a means of enforcing such provisions including sanctions for noncompliance. Provided, that if the contractor becomes involved in, or is threatened with litigation by a subcontractor, or supplier because of such direction, the contractor may request the Recipient to enter into any litigation to protect the interests of the Recipient. In addition, the contractor may request the United States to enter into the litigation to protect the interests of the United States.

APPENDIX B

CLAUSES FOR DEEDS TRANSFERRING UNITED STATES PROPERTY

The following clauses will be included in deeds effecting or recording the transfer of real property, structures, or improvements thereon, or granting interest therein from the United States pursuant to the provisions of Assurance 4:

NOW, THEREFORE, the U.S. Department of Transportation as authorized by law and upon the condition that the **COUNTY OF HIDALGO** will accept title to the lands and maintain the project constructed thereon in accordance with all applicable federal statutes, the Regulations for the Administration of all Department of Transportation programs, and the policies and procedures prescribed by the Federal Highway Administration of the U.S. Department of Transportation in accordance and in compliance with all requirements imposed by Title 49, Code of Federal Regulations, U.S. Department of Transportation, Subtitle A, Office of the Secretary, Part 21, Nondiscrimination in Federally-assisted programs of the U.S. Department of Transportation pertaining to and effectuating the provisions of Title VI of the Civil Rights Act of 1964 (78 Stat. 252; 42 U.S.C. § 2000d to 2000d-4), does hereby remise, release, quitclaim and convey unto the **COUNTY OF HIDALGO** all the right, title and interest of the U.S. Department of Transportation in and to said lands described in Exhibit 1 attached hereto and made a part hereof.

(HABENDUM CLAUSE)

TO HAVE AND TO HOLD said lands and interests therein unto **COUNTY OF HIDALGO** and its successors forever, subject, however, to the covenants, conditions, restrictions and reservations herein contained as follows, which will remain in effect for the period during which the real property or structures are used for a purpose for which Federal financial assistance is extended or for another purpose involving the provision of similar services or benefits and will be binding on the **COUNTY OF HIDALGO**, its successors and assigns.

The **COUNTY OF HIDALGO**, in consideration of the conveyance of said lands and interests in lands, does hereby covenant and agree as a covenant running with the land for itself, its successors and assigns, that (1) no person will on the grounds of race, color, or national origin, be excluded from participation in, be denied the benefits of, or be otherwise subjected to discrimination with regard to any facility located wholly or in part on, over ,or under such lands hereby conveyed [,] [and]* (2) that the **COUNTY OF HIDALGO** will use the lands and interests in lands and interests in lands so conveyed, in compliance with all requirements imposed by or pursuant to Title 49, Code of Federal Regulations, U.S. Department of Transportation, Subtitle A, Office of the Secretary, Part 21, Nondiscrimination in Federally-assisted programs of the U.S. Department of Transportation, Effectuation of Title VI of the Civil Rights Act of 1964, and as said Regulations and Acts may be amended[, and(3) that in the event of breach of any of the above-mentioned nondiscrimination conditions, the Department will have a right to enter or re-enter said lands and facilities on said land ,and that above described land and facilities will thereon revert to and vest in and become the absolute property of the U.S. Department of Transportation and its assigns as such interest existed prior to this instruction].*

(*Reverted clause and related language to be used only when it is determined that such a clause is necessary in order to make clear the purpose of Title VI.)

APPENDIX C

CLAUSES FOR TRANSFER OF REAL PROPERTY ACQUIRED OR IMPROVED UNDER THE ACTIVITY, FACILITY, OR PROGRAM

The following clauses will be included in deeds, licenses, leases, permits, or similar instruments entered into by the **COUNTY OF HIDALGO** pursuant to the provisions of Assurance 7(a):

A. The (grantee, lessee, permittee, etc. as appropriate) for himself/herself, his/her heirs, personal representatives, successors in interest, and assigns, as a part of the consideration hereof, does hereby covenant and agree [in the case of deeds and leases add "as a covenant running with the land"] that:

   1. In the event facilities are constructed, maintained, or otherwise operated on the property described in this (deed, license, lease, permit, etc.) for a purpose for which a U.S. Department of Transportation activity, facility, or program is extended or for another purpose involving the provision of similar services or benefits, the (grantee, licensee, lessee, permitted, etc.) will maintain and operate such facilities and services in compliance with all requirements imposed by the Acts and Regulations (as may be amended)such that no person on the grounds of race, color, or national origin, will be excluded from participation in, denied the benefits of, or be otherwise subjected to discrimination in the use of said facilities.

B. With respect to licenses, leases, permits, etc., in the event of breach of any of the above Nondiscrimination covenants, **COUNTY OF HIDALGO** will have the right to terminate the (lease, license, permit, etc.) and to enter, re-enter, and repossess said lands and facilities thereon, and hold the same as if the (lease, license, permit, etc.) had never been made or issued.*

C. With respect to a deed, in the event of breach of any of the above Nondiscrimination covenants, the **COUNTY OF HIDALGO** will have the right to enter or re-enter the lands and facilities thereon, and the above described lands and facilities will there upon revert to and vest in and become the absolute property of the **COUNTY OF HIDALGO** and its assigns.*

(*Reverted clause and related language to be used only when it is determined that such a clause is necessary in order to make clear the purpose of Title VI.)

APPENDIX D

CLAUSES FOR CONSTRUCTION/USE/ACCESS TO REAL PROPERTY ACQUIRED UNDER THE ACTIVITY, FACILITY OR PROGRAM

The following clauses will be included in deeds, licenses, permits, or similar instruments/agreements entered into by **COUNTY OF HIDALGO** pursuant to the provisions of Assurance 7(b):

A. The (grantee, licensee, permittee, etc., as appropriate) for himself/herself, his/her heirs, personal representatives, successors in interest, and assigns, as a part of the consideration hereof, does hereby covenant and agree (in the case of deeds and leases add, "as a covenant running with the land") that (1) no person on the ground of race, color ,or national origin, will be excluded from participation in, denied the benefits of, or be otherwise subjected to discrimination in the use of said facilities, (2) that in the construction of any improvements on, over, or under such land, and the furnishing of services thereon, no person on the ground of race, color, or national origin, will be excluded from participation in, denied the benefits of, or otherwise be subjected to discrimination, (3) that the (grantee, licensee, lessee, permittee, etc.) will use the premises in compliance with all other requirements imposed by or pursuant to the Acts and Regulations, as amended, set forth in this Assurance.

B. With respect to (licenses, leases, permits, etc.), in the event of breach of any of the above Nondiscrimination covenants, **COUNTY OF HIDALGO** will have the right to terminate the (license, permit, etc., as appropriate) and to enter or re-enter and repossess said land and the facilities thereon, and hold the same as if said(license, permit, etc., as appropriate) had never been made or issued.*

C. With respect to deeds, in the event of breach of any of the above Nondiscrimination covenants, **COUNTY OF HIDALGO** will there upon revert to and vest in and become the absolute property of **COUNTY OF HIDALGO** and its assigns.*

(*Reverted clause and related language to be used only when it is determined that such a clause is necessary in order to make clear the purpose of Title VI.)

APPENDIX E

During the performance of this contract, the contractor, for itself, its assignees, and successors in interest (hereinafter referred to as the "contractor") agrees to comply with the following nondiscrimination statutes and authorities; including but not limited to:

Pertinent Nondiscrimination Authorities:

- Title VI of the Civil Rights Act of 1964 (42 U.S.C. § 2000d et seq., 78 stat. 252), (prohibits discrimination on the basis of race, color, national origin); and 49CFR Part 21.
- The Uniform Relocation Assistance and Real Property Acquisition Policies Act of1970, (42U.S.C. § 4601), (prohibits unfair treatment of persons displaced or whose property has been acquired because of Federal or Federal-aid programs and projects);
- Federal-Aid Highway Act of 1973, (23U.S.C. § 324et seq.), (prohibits discrimination on the basis of sex);
- Section 504 of the Rehabilitation Act of 1973, (29U.S.C. § 794 et seq.), as amended, (prohibits discrimination on the basis of disability); and 49CFRPart 27;
- The Age Discrimination Act of 1975, as amended,(42U.S.C. § 6101 et seq.), (prohibits discrimination on the basis of age);
- Airport and Airway Improvement Act of 1982, (49U.S.C. § 4 71, Section 4 7123),as amended, (prohibits discrimination based on race, creed, color, national origin, or sex);
- The Civil Rights Restoration Act of 1987,(PL 100-209), (Broadened the scope, coverage and applicability of Title VI of the Civil Rights Act of 1964, The Age Discrimination Act of 1975 and Section 504 of the Rehabilitation Act of 1973, by expanding the definition of the terms "programs or activities" to include all of the programs or activities of the Federal-aid recipients, sub recipients and contractors, whether such programs or activities are Federally funded or not);
- Titles II and III of the Americans with Disabilities Act, which prohibit discrimination on the basis of disability in the operation of public entities, public and private transportation systems, places of public accommodation, and certain testing entities (42 U.S.C. §§ 12131-12189)as implemented by Department of Transportation regulations at 49C.F.R. parts 37 and 38;
- The Federal Aviation Administration's Nondiscrimination statute (49U.S.C. § 47123) (prohibits discrimination on the basis of race, color, national origin, and sex);
- Executive Order 12898, Federal Actions to Address Environmental Justice in Minority Populations and Low-Income Populations, which ensures discrimination against minority populations by discouraging programs, policies, and activities with disproportionately high and adverse human health or environmental effects on minority and low-income populations;
- Executive Order 13166, Improving Access to Services for Persons with Limited English Proficiency, and resulting agency guidance, national origin discrimination includes discrimination because of limited English proficiency (LEP). To ensure compliance with Title VI, you must take reasonable steps to ensure that LEP persons have meaningful access to your programs (70 Fed. Reg. at 74087 to 74100);
- Title IX of the Education Amendments of1972, as amended, which prohibits you from discriminating because of sex in education programs or activities (20 U .S.C. 1681 et seq).

HIDALGO COUNTY
(Including all funding sources, programs, and entities)
REQUEST FOR BIDS
"PIPES & RELATED MISCELLANEOUS ITEMS"

RFB No.: 2017-046-04-05-FAZ

RFB SUBMITTAL CHECK LIST

All forms listed below must be included in the RFB response.

Indicate with a check mark (✓) the Forms completed and included in this response:

_____ Page 8 of Legal Notice

_____ Exhibit "B" Bid Page

_____ Exhibit "C" Acknowledgement forms

_____ Exhibit "D" CIQ Form -Copy of Co. Clerk Recording fee receipt (if applicable)

_____ Exhibit "E" Vendor Bidder Applications and IRS form W-9

_____ Exhibit "F" Certification Regarding Debarment

_____ SAMS.gov Registration Acknowledgement www.sam.gov

_____ One (1) Original, Three (3) Copies of Bid(s) (see No. 2 of Legal Notice).

EXHIBIT “B”

BID PAGE

EXHIBIT "B" – BID PAGE
Hidalgo County (All funding sources, programs & entities)
"PIPES & Related Miscellaneous Items"
RFB No.: 2017-046-04-05-FAZ

CATEGORY (A) – PIPES

CORRUGATED POLYVINYL CHLORIDE (PVC) STORM SEWER PIPE

NIGP CODE: 665-89 Polyvinyl Chloride (PVC)

DESCRIPTION	PRICE	
12"	No Bid	LF
15"		LF
18"		LF
24"		LF
30"		LF
36"		LF
42"		LF
48"		LF

CORRUGATED STEEL STORM SEWER PIPE

NIGP CODE: 210-29 Corrugated Galvanized Metal Pipe
(UNIT PRICE INCLUDES ONE GASKETED BAND CONNECTION FOR EVERY 20 FOOT JOINT)

DIAMETER	TYPE "IR"PIPE PRICE	TYPE "I" PIPE PRICE	TYPE "IA" PIPE PRICE	
12"			No Bid	LF
15"				LF
18"				LF
24"				LF
30"				LF
36"				LF
42"				LF
48"				LF
54"				LF
60"				LF
66"				LF
72"				LF
78"				LF
84"				LF
90"				LF
96"				LF
102"				LF
108"				LF
114"				LF
120"				LF
126"				LF
132"				LF
138"				LF
144"				LF

OPENED
9:54
4-5-17
Witnessed

REINFORCED CONCRETE PIPE – RUBBER GASKET JOINT PIPE

NIGP CODE: 658-68

DESCRIPTION	CLASS III PRICE		CLASS IV PRICE		CLASS V PRICE	
12"	15.64	LF	20.10	LF	22.22	LF
15"	18.40	LF	23.28	LF	25.39	LF
18"	21.16	LF	26.45	LF	28.57	LF
24"	29.60	LF	33.86	LF	35.97	LF
30"	43.80	LF	47.49	LF	50.91	LF
36"	61.85	LF	67.71	LF	72.30	LF
42"	82.12	LF	83.05	LF	95.31	LF
48"	94.67	LF	104.74	LF	120.41	LF
54"	112.78	LF	128.34	LF	146.64	LF
60"	141.43	LF	159.51	LF	188.88	LF
72"	195.29	LF	225.18	LF	276.28	LF

REINFORCED CONCRETE PIPE – TONGUE & GROOVE PIPE

NIGP CODE: 658-68

DESCRIPTION	CLASS III PRICE		CLASS IV PRICE		CLASS V PRICE	
12"	12.88	LF	16.93	LF	18.22	LF
15"	15.64	LF	20.10	LF	21.25	LF
18"	18.40	LF	23.28	LF	24.39	LF
24"	26.00	LF	29.62	LF	30.36	LF
30"	39.68	LF	41.45	LF	50.37	LF
36"	54.37	LF	60.09	LF	70.57	LF
42"	73.98	LF	76.18	LF	85.29	LF
48"	93.21	LF	100.10	LF	113.74	LF
54"	109.49	LF	121.93	LF	137.07	LF
60"	135.22	LF	153.30	LF	174.65	LF
72"	195.29	LF	225.18	LF	254.98	LF

REINFORCED POLYTHYLENE PIPE – 20 FOOT JOINTS

NIGP CODE: 658-58

DESCRIPTION	PRICE	
24"	NO BID	LF
30"		LF
36"		LF
42"		LF
48"		LF
54"		LF
60"		LF
72"		LF
84"		LF
96"		LF

OPENED 9:54 45-17 Witnessed

AWWA C900 PVC PLASTIC PRESSURE PIPE

NIGP CODE: 658-56 PLASTIC PIPES OR
NIGP CODE: 658-60 PVC PIPES

DESCRIPTION	DR 14 PRICE		DR 18 PRICE		DR 25 PRICE	
4"	NO BID	LF	NO BID	LF	NO BID	LF
6"	↓	LF	↓	LF	↓	LF
8"		LF		LF		LF
10"		LF		LF		LF
12"		LF		LF		LF

AWWA C905 PVC PLASTIC WATER PIPE

NIGP CODE: 658-56 PLASTIC PIPES OR
NIGP CODE: 658-60 PVC PIPES

DESCRIPTION	DR 18 PRICE		DR 25 PRICE		DR 32.5 PRICE		DR 41 PRICE		DR 51 PRICE	
14"	NO BID	LF	NO BID	LF	NO BID	LF	NO BID	LF	NO BID	LF
16"	↓	LF	↓	LF	↓	LF	↓	LF	↓	LF
18"		LF		LF		LF		LF		LF
24"		LF		LF		LF		LF		LF
30"		LF		LF		LF		LF		LF
36"		LF		LF		LF		LF		LF
42"		LF		LF		LF		LF		LF
48"		LF		LF		LF		LF		LF

OPENED
9:54
4-5-17
Witnessed

SDR 26 AND SDR 35 GASKETED GRAVITY SANITARY SEWER PIPE

NIGP CODE: 210-35
SEWER PIPE JOINT SEALING COMPOUND

SIZE OF PIPE	SDR 26		SDR 35	
4"	NO BID	LF	NO BID	LF
6"	↓	LF	↓	LF
8"		LF		LF
10"		LF		LF
12"		LF		LF
15"		LF		LF

HIGH PERFORMANCE (HP) POLYPROPYLENE STORM PIPE

DESCRIPTION	PRICE	
12"	NO BID	LF
15"	↓	LF
18"		LF
24"		LF
30"		LF
36"		LF
42"		LF
48"		LF
60"		LF

HIGH DESTINY POLYETHYLENE PIPE (HDPE) NIGP CODE: 658-58 Polyethylene Pipe And Fitting		
DESCRIPTION	PRICE	
4"	NO BID	LF
6"		LF
8"		LF
10"		LF
12"		LF
15"		LF
18"		LF
24"		LF
30"		LF
36"		LF
42"		LF
48"		LF
54"		LF
60"		LF

PLUMBING PIPES – 20 FOOT SECTIONS NIGP CODE: 967-60	
PVC	PRICE
½"	NO BID
1 ½"	
2"	
3"	
4"	

OPENED
9:54
4-5-17
Witnessed

PLUMBING PIPES – 20 FOOT SECTIONS NIGP CODE: 967-60	
COPPER	PRICE
½"	NO BID
¾"	

CATEGORY (B) – INLETS

NIGP CODE: 210-31

INLETS, AREA, SEWER DRAIN, PRECAST, CONCRETE, STORM DRAIN, **NO BOTTOM FLOORS**

DESCRIPTION	PRICE																
	2'	2 ½'	3'	3 ½'	4'	4 ½'	5'	5 ½'	6'	6 ½'	7'	7 ½'	8'	8 ½'	9'	9 ½'	10'
Type "A" Inlet (5' x 3')	See attached																
Type "A-1" Inlet (5' x 4')																	
Type "A-2" Inlet (5' x 5')																	
Type "A-3" Inlet (5' x 6')																	
Type "A" (SPL-1) Inlet (5' x 3')	NO BID																
Type "A-1" (SPL-1) Inlet (5' x 4')																	
Type "A-2" (SPL-1) Inlet (5' x 5')																	
Type "A-3" (SPL-1) Inlet (5' x 6')																	
TYPE "C" INLET 2' X 2'																	
TYPE "C" INLET 3' X 3'	See attached																
TYPE "C" INLET 4' X 4'																	
TYPE "CC" INLET 5' x 3'																	

OPENED 9:5[illegible] Witnessed 4-5-17

Type A Curb Inlet

SIZE	BOX COMBO FOR SIZING		COMPLETE PRICING
2.5'	-	-	$ 904.14
3.0'	-	-	$ 908.98
3.5'	-	-	$ 928.50
4.0'	-	-	$ 968.58
4.5'	-	-	$ 1,023.16
5.0'	-	-	$ 1,079.06
5.5'	-	-	$ 1,143.25
6.0'			$ 1,224.10
6.5'			$ 1,293.84
7.0'			$ 1,363.59
7.5'			$ 1,430.57
8.0'			$ 1,483.68
8.5' *	*5.0'*	*3.5'*	$ 1,501.12
9.0' *	*5.0'*	*4.0'*	$ 1,516.34
9.5' *	*5.0'*	*4.5'*	$ 1,570.92
10.0 ' *	*5.0'*	*5.0'*	$ 1,626.82

* these sizes use a combination of boxes to achieve height

OPENED
9:54
4-5-17
Witnessed

Type C 2x2 - GRATE Inlet

SIZE	BOX COMBO FOR SIZING		COMPLETE PRICING
2.5'			$ 640.02
3.0'			$ 696.79
3.5'			$ 753.57
4.0'			$ 806.78
4.5'			$ 863.57
5.0'			$ 916.78
5.5'			$ 973.56
6.0'			$ 1,026.77
6.5'			$ 1,090.67
7.0'			$ 1,136.77
7.5'			$ 1,193.55
8.0'			$ 1,246.76
8.5' *	*5.0'*	*3.5'*	$ 1,303.55
9.0' *	*5.0'*	*4.0'*	$ 1,356.76
9.5' *	*5.0'*	*4.5'*	$ 1,413.55
10.0 ' *	*5.0'*	*5.0'*	$ 1,466.76

* these sizes use a combination of boxes to achieve height

OPENED
9:54
4-5-17
Witnessed

Type C 3X3 - GRATE Inlet

SIZE	BOX COMBO FOR SIZING		COMPLETE PRICING
2.5'			$ 829.80
3.0'			$ 901.51
3.5'			$ 973.21
4.0'			$ 1,044.91
4.5'			$ 1,116.61
5.0'			$ 1,188.31
5.5'			$ 1,260.01
6.0'			$ 1,331.71
6.5'			$ 1,403.41
7.0'			$ 1,475.11
7.5'			$ 1,546.81
8.0'			$ 1,618.51
8.5' *	*5.0'*	*3.5'*	$ 1,690.22
9.0' *	*5.0'*	*4.0'*	$ 1,761.92
9.5' *	*5.0'*	*4.5'*	$ 1,833.62
10.0 ' *	*5.0'*	*5.0'*	$ 1,905.32

* these sizes use a combination of boxes to achieve height

OPENED
9:54
4-5-17
Witnessed

Type C 4x4 - GRATE Inlet

SIZE	BOX COMBO FOR SIZING		COMPLETE PRICING
2.5'			$ 1,136.62
3.0'			$ 1,240.17
3.5'			$ 1,347.26
4.0'			$ 1,450.81
4.5'			$ 1,554.35
5.0'			$ 1,661.45
5.5'			$ 1,764.99
6.0'			$ 1,868.53
6.5'			$ 1,972.07
7.0'			$ 2,079.17
7.5'			$ 2,182.71
8.0'			$ 2,286.26
8.5' *	*5.0'*	*3.5'*	$ 2,396.91
9.0' *	*5.0'*	*4.0'*	$ 2,500.46
9.5' *	*5.0'*	*4.5'*	$ 2,604.00
10.0 ' *	*5.0'*	*5.0'*	$ 2,711.10

* these sizes use a combination of boxes to achieve height

OPENED
9:54
4-5-17
Witnessed

Type "CC" Precast Double Grate Inlet Complete

SIZE	BOX COMBO FOR SIZING		COMPLETE PRICING	
2.5'			$	1,262.14
3.0'			$	1,267.29
3.5'			$	1,288.03
4.0'			$	1,303.28
4.5'			$	1,357.86
5.0'			$	1,413.76
5.5'			$	1,477.95
6.0'			$	1,558.80
6.5'			$	1,628.54
7.0'			$	1,698.29
7.5'			$	1,765.27
8.0'			$	1,818.38
8.5' *	*5.0'*	*3.5'*	$	1,835.79
9.0' *	*5.0'*	*4.0'*	$	1,851.04
9.5' *	*5.0'*	*4.5'*	$	1,905.62
10.0 ' *	*5.0'*	*5.0'*	$	1,961.52

* these sizes use a combination of boxes to achieve height

OPENED
9:54
4-5-17
Witnessed

Type "F" Inlet (W=3')																	
Type "F-1" Inlet (W=4')																	
Type "F-2" Inlet (W=5')																	
Type "F-3" Inlet (W=6')																	
Type "F" (SPL-1) Inlet (W=3')																	
Type "F-1" (SPL-1) Inlet (W=4')																	
Type "F-2" (SPL-1) Inlet (W=5')																	
Type "F-3" (SPL-1) Inlet (W=6')																	

NO BID

CATEGORY (C) – MANHOLES, NO BOTTOM FLOORS

NIGP CODE: 890-30

MANHOLES

DESCRIPTION	PRICE														
	3'	3 ½'	4'	4 ½'	5'	5 ½'	6'	6 ½'	7'	7 ½'	8'	8 ½'	9'	9 ½'	10'
TYPE "A" MANHOLE	See attached														
TYPE "A-1" MANHOLE	See attached														
TYPE "M" MANHOLE		NO BID													

Witnessed 4-5-17

OPENED 9:54

48" MH(Type "A") Precast Manhole Complete

SIZE		COMPLETE PRICING
3.0'	$	596.40
3.5'	$	650.40
4.0'	$	703.55
4.5'	$	739.55
5.0'	$	789.20
5.5'	$	825.20
6.0'	$	881.80
6.5'	$	917.80
7.0'	$	970.90
7.5'	$	1,006.90
8.0'	$	1,060.05
8.5'	$	1,096.05
9.0'	$	1,145.70
9.5'	$	1,181.70
10.0 '	$	1,288.30

60" MH(Type "A-1") Precast Manhole Complete

SIZE		COMPLETE PRICING
3.0'	$	747.05
3.5'	$	765.05
4.0'	$	801.05
4.5'	$	903.05
5.0'	$	939.05
5.5'	$	998.50
6.0'	$	1,034.50
6.5'	$	1,171.00
7.0'	$	1,207.00
7.5'	$	1,306.70
8.0'	$	1,342.70
8.5'	$	1,444.70
9.0'	$	1,480.70
9.5'	$	1,540.15
10.0 '	$	1,576.15

OPENED
9:54
4-5-17
Witnessed

CATEGORY (D) – MISCELLANEOUS

DESCRIPTION		
WATER VALVE	UNIT	PRICE
2"	EA	NO BID
4"	EA	
6"	EA	
8"	EA	
10"	EA	
90 DEGREE ELBOW		
2"	EA	
4"	EA	
6"	EA	
8"	EA	
10"	EA	
45 DEGREE ELBOW		
2"	EA	
4"	EA	
6"	EA	
8"	EA	
10"	EA	
STEEL PIPE CASING WITH SPACERS		
4"	LF	
6"	LF	
12"	LF	
16"	LF	
24"	LF	
FIRE HYDRANT W/VALVE	EA	
PVC SCHEDULE 40 WATER LINE DR 18		
2"	LF	
8"	LF	
PVC SCHEDULE 40		
1.5"	LF	
0.75"	LF	
0.5"	LF	
WATER SADDLE W/2' CORPORATE VALVE		
8" x 2"	EA	

OPENED
9:54
4-5-17
Witnessed

EXHIBIT "B" – BID PAGE
Hidalgo County (All funding sources, programs & entities)
"PIPES & Related Miscellaneous Items"
RFB No.: 2017-046-04-05-FAZ

HP Dual Wall Marmac Couplers		
PIPE SIZE	PRICE	UNIT
12"	NO BID	EA
15"		EA
18"		EA
24"		EA
30"		EA
36"		EA
42"		EA
48"		EA
60"		EA

HP Dual Wall Fabricated Tees		
PIPE SIZE	PRICE	UNIT
12"	NO BID	EA
15"		EA
18"		EA
24"		EA
30"		EA
36"		EA
42"		EA
48"		EA
60"		EA

OPENED
9:54
4-5-17
Witnessed

HP Dual Wall Fabricated Bends						
PIPE SIZE	11.25 Bend	22.5 Bend	30* Bend	45* Bend	90* Bend	Unit
12"	NO BID					EA
15"						EA
18"						EA
24"						EA
30"						EA
36"						EA
42"						EA
48"						EA
60"						EA

BIDDER/COMPANY NAME: Rio Valley Pipe LLC dba CAPA

ADDRESS: 3609 W. Palma Vista Dr.

CITY: Palmview STATE: TX ZIPCODE: 78572

PHONE No: (956) 580-2502 FAX No: (956) 583-2086 CELL №: —

AUTHORIZED SIGNATURE:

PRINTED NAME: Larry Hinojosa

TITLE: Sales Administrator DATE: 4-4-17

EMAIL: sales@capatexas.com

EXHIBIT “C”

CERTIFICATE OF INSURANCE

CERTIFICATE OF LIABILITY INSURANCE

DATE (MM/DD/YYYY): 2/22/2017

THIS CERTIFICATE IS ISSUED AS A MATTER OF INFORMATION ONLY AND CONFERS NO RIGHTS UPON THE CERTIFICATE HOLDER. THIS CERTIFICATE DOES NOT AFFIRMATIVELY OR NEGATIVELY AMEND, EXTEND OR ALTER THE COVERAGE AFFORDED BY THE POLICIES BELOW. THIS CERTIFICATE OF INSURANCE DOES NOT CONSTITUTE A CONTRACT BETWEEN THE ISSUING INSURER(S), AUTHORIZED REPRESENTATIVE OR PRODUCER, AND THE CERTIFICATE HOLDER.

IMPORTANT: If the certificate holder is an ADDITIONAL INSURED, the policy(ies) must be endorsed. If SUBROGATION IS WAIVED, subject to the terms and conditions of the policy, certain policies may require an endorsement. A statement on this certificate does not confer rights to the certificate holder in lieu of such endorsement(s).

PRODUCER	CONTACT NAME: Consuelo Cavazos, CISR
McAfee Insurance Agency P. O. Box 625 321 Second Street Mercedes TX 78570	PHONE (A/C, No, Ext): (956) 565-2481 FAX (A/C, No): (956) 565-2733 E-MAIL ADDRESS: consuelo@mcafeeagency.com

INSURER(S) AFFORDING COVERAGE	NAIC #
INSURER A: Ironshore Specialty Ins. Co	
INSURER B: National Liability & Fire Ins	
INSURER C: Texas Mutual Ins. Co.	
INSURER D:	
INSURER E:	
INSURER F:	

INSURED
Rio Valley Pipe, LLC
3609 West Palma Vista Drive
Palmview TX 78572-1861

COVERAGES **CERTIFICATE NUMBER:2017-2018** **REVISION NUMBER:**

THIS IS TO CERTIFY THAT THE POLICIES OF INSURANCE LISTED BELOW HAVE BEEN ISSUED TO THE INSURED NAMED ABOVE FOR THE POLICY PERIOD INDICATED. NOTWITHSTANDING ANY REQUIREMENT, TERM OR CONDITION OF ANY CONTRACT OR OTHER DOCUMENT WITH RESPECT TO WHICH THIS CERTIFICATE MAY BE ISSUED OR MAY PERTAIN, THE INSURANCE AFFORDED BY THE POLICIES DESCRIBED HEREIN IS SUBJECT TO ALL THE TERMS, EXCLUSIONS AND CONDITIONS OF SUCH POLICIES. LIMITS SHOWN MAY HAVE BEEN REDUCED BY PAID CLAIMS.

INSR LTR	TYPE OF INSURANCE	ADDL INSD	SUBR WVD	POLICY NUMBER	POLICY EFF (MM/DD/YYYY)	POLICY EXP (MM/DD/YYYY)	LIMITS	
A	X COMMERCIAL GENERAL LIABILITY CLAIMS-MADE [X] OCCUR GEN'L AGGREGATE LIMIT APPLIES PER: POLICY [X] PRO-JECT [ ] LOC OTHER:			003075700	2/22/2017	2/22/2018	EACH OCCURRENCE DAMAGE TO RENTED PREMISES (Ea occurrence) MED EXP (Any one person) PERSONAL & ADV INJURY GENERAL AGGREGATE PRODUCTS - COMP/OP AGG Employee Benefits	$ 1,000,000 $ 500,000 $ 25,000 $ 1,000,000 $ 2,000,000 $ 2,000,000 $ 1,000,000
B	AUTOMOBILE LIABILITY ANY AUTO ALL OWNED AUTOS [X] SCHEDULED AUTOS X HIRED AUTOS [X] NON-OWNED AUTOS			73TRS073449	2/22/2017	2/22/2018	COMBINED SINGLE LIMIT (Ea accident) BODILY INJURY (Per person) BODILY INJURY (Per accident) PROPERTY DAMAGE (Per accident)	$ 1,000,000 $ $ $
A	UMBRELLA LIAB [X] OCCUR X EXCESS LIAB CLAIMS-MADE DED RETENTION $			003075800	2/22/2017	2/22/2018	EACH OCCURRENCE AGGREGATE	$ 1,000,000 $ 1,000,000 $
C	WORKERS COMPENSATION AND EMPLOYERS' LIABILITY Y/N ANY PROPRIETOR/PARTNER/EXECUTIVE OFFICER/MEMBER EXCLUDED? (Mandatory in NH) N/A If yes, describe under DESCRIPTION OF OPERATIONS below			0001198034	10/27/2016	10/27/2017	X PER STATUTE OTH-ER E.L. EACH ACCIDENT E.L. DISEASE - EA EMPLOYEE E.L. DISEASE - POLICY LIMIT	 $ 1,000,000 $ 1,000,000 $ 1,000,000

DESCRIPTION OF OPERATIONS / LOCATIONS / VEHICLES (ACORD 101, Additional Remarks Schedule, may be attached if more space is required)
Contract No. C-15-013A-04-28 "Pipes and Miscellaneous Items" Hidalgo County

CERTIFICATE HOLDER

Hidalgo County Purchasing Department
2802 S Business Hwy 281
Edinburg, TX 78539

CANCELLATION

SHOULD ANY OF THE ABOVE DESCRIBED POLICIES BE CANCELLED BEFORE THE EXPIRATION DATE THEREOF, NOTICE WILL BE DELIVERED IN ACCORDANCE WITH THE POLICY PROVISIONS.

AUTHORIZED REPRESENTATIVE
Robert R Garza/CO

© 1988-2014 ACORD CORPORATION. All rights reserved.

The ACORD name and logo are registered marks of ACORD

McAFEE AGENCY INSURANCE
Since 1935

All Valley Trucking, LLP
Upper Valley Materials LLC
Rio Valley Pipe, LLC
DBA CAPA
3609 West Palm Vista Drive
Palmview, TX 78572

June 16, 2016

Reference: Business Auto Policy # 73TRS060979
Effective 2/22/2016 to 2/22/2017

To: Larry Hinojosa

As per our request, below is the current list of scheduled vehicles on the following policy:

*Vehicle #	Cust Veh #	Year	Make	Model	VIN
00001	R	2008	Chevrolet	Silverado	3GCEC13J88G141932
00002	R	2008	Chevrolet	Silverado	1GCEC19018Z146193
00003	R	2008	Chevrolet	Silverado	2GCEC13J381188942
00004	R	2005	Ford	F150	1FTRX12W25NA13479
00005	R	2005	Ford	F150	1FTRF12225NA08525
00006	R	2005	Ford	F150	1FTRF12225NA09612
00007	R	2005	Ford	F150	1FTRX12W95NA11101
00008	R	2005	Ford	F150	1FTRF12225NA49799
00009	R	1992	Ford	Superduty	2FDLF47GXNCA30267
00010	R	2011	Chevy	Silverado	3GCPCSE01BG182395
00011	A	1998	Freightliner	Tractor	1FUYDPYB4WL837260

00012	A	1998	Mack		1M2AA13Y9WW091599
00013	A	1992	Fontaine	Flatbed	13N148302N1554687
00014	A	1999	Mack	Truck Tractor	1M2AA13YXXW111389
00015	A	1992	Fontaine	Flatbed	13N148300N1554641
00016	A	1999	Mack	Truck Tractor	1M2AA13Y6XW111390
00017	A	1992	Fontaine	Flatbed	13N148304N1554657
00018	A	1965	Load Craft	Lowboy	CA65098
00019	A	1996	Mack	Truck Tractor	1M1AA13Y7TW059590
00020	A	1998	Mack		1M2AA13Y5WW093480
00021	A	1998	Mack		1M2AA13Y9WW093482
00022	A	1980	Rogers	Lowboy	18805
00023	A	2000	Mack		1M1AA13Y5YW116716
00024	A	1999	Mack		1M1AA13Y4XW106807
00025	A	1999	Mack		1M1AA13Y8XW112626
00026	A	1998	Mack		1M1AA18Y1WW082635
00027	A	2002	Mack	CX613 T/A	1M1AE07Y92W012939
00028	A	2002	Mack	CX613 T/A	1M1AE07YX2W012920
00029	A	2002	Mack	CX613 T/A	1M1AE07Y62W012932
00030	A	1973	Hyster	Trailer	TR136827

00031	A	2002	Mack	CX613 T/A	1M1AE07Y72W012941
00032	A	1994	Utility Trailer		1UYF52481RA152703
00033	A	1994	Utility Trailer		1UFS2489RA152707
00034	A	2001	Internationa l	4,000 Gal	2HSCEAHRX1C020829
00035	A	1980	Transcraft	Trailer	TC14923
00036	A	1991	Dorsey	Trailer	1DTP16W28MP029595
00037	A	1980	Transcraft	Lowboy	TC14575
00038	A	1979	Transcraft	Lowboy	TC12951
00039	A	1993	Ramco		8760
00040	A	1992	Ramco		8505
00041	A	1998	Vantage	Tank	4EPPA4126WBBA2179
00042	A	1973	Freuhauf	Lowboy	FWR406205
00043	A	1990	Fruehauf		1H4B04222LL029001
00044	A	1984	Heil	Pneumatic	1HLS1M7B2E7T00208
00045	A	2006	Mack	Truck Tractor	1M2AL02Y46M003768
00046	A	2006	Clement	End Dump	5C2BB38BX6M005204
00047	A	2010	Mack	CXU613	1M1AW02Y5AN010579
00048	A	2006	Mack	Truck Tractor	1M2AL02Y66M003769



00049	A	2010	Mack	CXU613	1M1AW02Y9AN010584
00050	A	2010	Mack	CXU613	1M1AW02Y0AN010585
00051	A	2006	Mack	Truck Tractor	1M2AL02Y26M003770
00052	A	2010	Vantage	Pneumatic Trailer	4E7PA4222BABA2775
00053	A	2006	Mack	Truck Tractor	1M2AL02Y46M003771
00054	A	2006	Mack	Truck Tractor	1M2AL02Y66M003772
00055	A	2001	Mack	600	1M1AA12Y11W141443
00056	A	2006	Haul	Flatbed	5JYLB35296P061934
00057	A	2006	Mack	Truck Tractor	1M2AL02Y86M003773
00058	A	2011	Vantage	Trailer	4E7PA4224BABA2776
00059	A	2006	Clement	End Dump	5C2BB38B16M005205
00060	A	2011	Vantage	Trailer	4E7PA4226BABA2777
00061	A	2006	Clement	End Dump	5C2BB38B76M005290
00062	A	2006	Clement	End Dump	5C2BB38B96M005291
00063	A	2009	Mack	GU813	1M1AX16Y59M009477
00064	A	2006	Clement	End Dump	5C2BB38B06M005292
00065	A	2009	Mack	GU813	1M1AX16Y79M009478
00066	A	2006	Vantage	Bulk	4E7PA42276PBA1110
00067	A	2006	Vantage	Bulk	4E7PA42226PBA1113



00068	A	2009	Mack	GU813	1M1AX16Y99M009479
00069	A	2009	Mack	GU813	1M1AX16Y59M009480
00070	A	1978	Load	Lowboy	CJ781607
00071	A	1980	Fruehauf	FB	0MT010814
00072	A	2011	Clement	Starlite	5C2BB38B3BM007225
00073	A	2011	Clement	Starlite	5C2BB38B9BM007228
00074	U	1993	Ramco		1R9BSE502TL008761
00075	A	2011	Clement	Starlite	5C2BB38B8BM007348
00076	A	2011	Clement	Starlite	5C2BB38B0BM007229
00077	A	1987	Transcraft	45' Spreadaxle Flatbed	1TTF45202H1028658
00078	A	1979	Great Dane	45' T/A Flatbed	M22567
00079	A	2007	CTS	Bottom Dump Trailer	5TU1140267S000344
00080	A	2007	CTS	Bottom Dump Trailer	5TU1140227S000339
00081	A	2007	CTS	Bottom Dump Trailer	5TU1140207S000338
00082	A	2007	CTS	Bottom Dump Trailer	5TU11402X7S000377
00083	A	2007	CTS	Bottom Dump Trailer	5TU1140217S000378
00084	A	1998	Freightliner		1FUYDPYBXWL837246
00085	A	1997	Mack	Dump Truck	1M1AA12Y3VW079873
00086	A	2008	Mack	GU813	1M1AX16Y08M001382



00087	A	2008	Mack	GU713	1M1AX09Y38M002466
00088	A	2008	Mack	GU713	1M1AX09Y58M002467
00089	A	2007	Mack	CXN613	1M1AK06Y37N020543
00090	A	2008	Mack	GU713	1M2AX07Y78M003490
00091	U	2008	Ford	F250	1FTSW21RX8EA91079
00092	U	2008	Toyota	Pick Up	3TMKU72N28M015378
00093	U	1999	Chevrolet	C-15 Fleets	1GCEC14W4YF124658
00094	U	2000	Chevrolet	1500 Fleets	2GCEK19T4Y1192526
00095	U	2005	Ford	F150	1FTRF12215NA02036
00096	U	2007	Mercedes	Benz S550	WDDNG71X77A028734
00097	U	2005	Ford	F150	1FTRF12235NA52548
00098	U	1999	Ford	F550	1FDAF56S9XED93966
00099	U	2004	Chevy	Van	1GCGG25UX41246488
00100	U	2004	Chevy	Van	1GCGG25UX41166527
00101	U	1994	Chevy		1GBP7H1J5RJ102860
00102	U	1999	Chevrolet	suburban	3GNFK16R7XG189727
00103	U	2012	Chevrolet	Silverado	3GCPCSE09CG131793
00104	U	2013	Chevy	Silverado	3GCPCPEA5DG121477
00105	U	2013	Chevy	Silverado	1GCNCPEA4CZ350528

00106	A	1982	Fontaine	Trailer	1A11422CBC1536177
00107	A	2007	Dodge	Ram	3D7ML46D27G812860
00108	A	1990	Mack	Dump Truck	1M2AA06Y9LW005046
00109	U	1999	Ford		1FDWF36L8XEE75903
00110	A	2012	Peterbilt	367	1XPTD49X9CD144084
00111	A	2012	Peterbilt	367	1XPTD49X0CD144085
00112	A	2012	Peterbilt	367	1XPTD49X2CD144086
00113	A	2012	Peterbilt	367	1XPTD49X8CD144089
00114	A	2012	Peterbilt	367	1XPTD49X4CD144090
00115	U	1998	International	Harvester	1HTSCABN1WH526021
00116	R	2014	Chevrolet	Silverado 1500	3GCPCREC9FG389561
00117	R	2014	Chevrolet	Silverado 1500	3GCPCREC3EG428919
00118	A	1996	International	Flatbed	1HTSCAAN3TH263527
00119	A	1997	Ford	Louisville	1FDXN80E0VVA34925
00120	A	1979	Tanker		T41495
00121	A	1979	Tanker		T40807
00122	A	2015	Directrailer	Loadstar Flatbed	5UJFS4821FE002572
00123	A	2015	Directrailer	Loadstar Flatbed	5UJFS4823FE002573
00124	A	2015	Directrailer	Loadstar Flatbed	5UJFS4825FE002574

00125	A	2015	Directrailer	Loadstar Flatbed	5UJFS482XFE002571
00126	A	2015	Directrailer	Loadstar Flatbed	5UJFS4828FE002570
00127	A	2015	Directrailer	Loadstar Drop Deck	5UJDS4820FE002568
00128	A	2015	Directrailer	Loadstar Drop Deck	5UJDS4822FE002569
00129	U	1989	BMY	Harsco M930	1044AA019
00130	A	2014	Exa	Pneumatic Tank	3E9J158J2ET034284
00131	A	2014	Exa	Pneumatic Tank	3E9J158J4ET034285
00132	R	2014	Dodge	Ram	3C63RRAL7EG154165
00133	A	2013	Peterbilt	386	1XPHD49X3DD163883
00134	A	2013	Peterbilt	386	1XPHD49X0DD213994
00135	A	2013	Peterbilt	386	1XPHD49X7DD213992
00136	A	2013	Peterbilt	386	1XPHD49X2DD213995
00137	A	2013	Peterbilt	386	1XPHD49X9DD213993
00138	A	1989	Lufkin	Flat Bed	1L01B4526K1082489
00139	A	2015	CTS	End Dump	5TU343727FS000836
00140	A	2015	CTS	End Dump	5TU343729FS000837
00141	A	2015	CTS	End Dump	5TU343720FS000838
00142	A	2015	CTS	End Dump	5TU343729FS000840
00143	A	2015	CTS	End Dump	5TU343720FS000841

00144	U	2001	Peterbilt	330	2NPNLD9X51M560792
00145	R	2008	Ford	F250	1FTSX20548ED54730
00146	R	2010	Ford	F150 King Ranch	1FTFW1EV1AKE33903
00147	A	2008	Ford	F150	1FDAF56R88ED21719
00148	U	2004	Mack	CV713 T/A Fuel & Lube	1M2AG11C74M014079
00149	A	2016	Freightliner	Cascadia	3AKJGBDV6GDGY9959
00150	A	2016	Freightliner	Cascadia	3AKJGBDV2GDGY9960
00151	A	2016	Freightliner	Cascadia	3AKJGBDV4GDGY9961
00152	A	2016	Freightliner	Cascadia	3AKJGBDV6GDGY9962
00153	A	2016	Freightliner	Cascadia	3AKJGBDV8GDGY9963
00154	A	2016	Freightliner	Cascadia	3AKJGBDVXGDGY9964
00155	A	2015	Polar APXS	Aluminum Pneumatic	1PMB14121F5013781
00156	A	2015	Polar APXS	Aluminum Pneumatic	1PMB14128F5013440
00157	A	2015	Polar APXS	Aluminum Pneumatic	1PMB14121F5013778
00158	A	2016	Freightliner	Cascadia	3AKJGBDV6GDGY7077
00159	A	2016	Freightliner	Cascadia	3AKJGBDV8GDGY7078
00160	A	2016	Freightliner	Cascadia	3AKJGBDVXGDGY7079
00161	A	2016	Freightliner	Cascadia	3AKJGBDV6GDGY7080
00162	A	2016	Freightliner	Cascadia	3AKJGBDVXGSGY4310

00163	A	2016	Freightliner	CA113DC	3AKJGBDV3GDHG5486
00164	A	2016	Freightliner	CA113DC	3AKJGBDV5GDGY9967
00165	U	2012	International	4300	1HTMMAAM4CH435805
00166	U	2006	Freightliner	M2 100	1FVACWCS96HW72987
00167	R	2013	Ford	F150	1FTEX1CM9DFA94047
00168	A	1999	Fontaine	TA50NGB	4LF4S5033X3507900
00169	P	2014	MAC	GT16SFC	1M9PT2021EB618522
00170	P	2012	Wylie	500 Gallon	5VUTE1327CP000010
00171	U	2001	Freightliner	FL70 1950 Gallon S/A Asphalt	1FVABTBV01DH31604
00172	R	2016	GMC	Sierra	1GTP1MEC8GG141664
00173	R	2016	GMC	Sierra	3GTP1MEC7GG125735
00174	A	2012	Vantage P42	Pneumatic Bulk Trailer	4E7PA4225CABA3145
00175	A	2012	Vantage P42	Pneumatic Bulk Trailer	4E7PA4223CABA3158
00176	A	2012	Vantage P42	Pneumatic Bulk Trailer	4E7PA4225CABA3162

Let me know if you need any additional information

Thank you
Consuelo Cavazos Lorenzana

321 Second Street/ P O Box 625, Mercedes, TX 78570 Phone (956) 565-2481 Fax (956) 565-2733

REQUIREMENTS AGREEMENT
C-17-046A-05-30

THIS AGREEMENT (the "Agreement") is entered into effective as of the 30th day of May, 2017 by and between HD Supply, Inc. ("Seller") and Hidalgo County, Texas ("Buyer").

WHEREAS, Buyer has solicited sealed bids for the supply of its requirements of **Hidalgo County** for the **"Pipes and Misc. Items,"** (the "Product") for **HIDALGO COUNTY**, as further described in Exhibit "A", Request for Bids (RFB) Procurement Packet as attached hereto and incorporated herein by reference for all purposes (the "RFB") for a period of **one (1) year** and;

WHEREAS, Seller has submitted a proposal to supply Buyer's requirements; and

WHEREAS, Buyer has determine that Seller has submitted the lowest and best bid to meet Buyer's requirements for certain of the Products, as herein after described.

NOW THEREFORE, for and in consideration of the mutual covenants and conditions hereinafter set forth, and other good and valuable consideration, the receipt and sufficiency of which is hereby acknowledged, the parties hereto agree as follows:

1. Buyer agrees to purchase from Seller, and Seller agrees to sell and deliver to Buyer, all of the Products listed on Exhibit "B", which is attached hereto and incorporated herein by reference, that Buyer may require for use by Buyer in Hidalgo County projects for a period of a **one (1) year** with the County's option to extend/renew for an additional one (1) year period under the same rates, terms and conditions. Hidalgo County reserves the right to continue this bid for an additional sixty (60) day grace period, under the same rates, terms and conditions at the end of the contract term for unforeseen delays in award of new bid for the next contract term. This Contract shall commence on **June 30, 2017** and expire on **June 29, 2018** and it is agreed that the Products will meet the Specifications in the Request for Bids (RFB) Procurement Packet set forth in Exhibit "A" hereto.

2. When Buyer determines that it needs a quantity of the Products to be delivered, it will, according to its Purchasing Policies, complete and submit to Seller a Purchase Order describing the type and quantity of the Products required. The Products are to be delivered by Seller to the location in Hidalgo County specified by Buyer in its Purchase Order.

3. Buyer agrees to pay Seller for each Purchase Order based on the prices set out in Exhibit "B". Seller shall render invoices for each Purchase Order, and the invoices shall be paid by Buyer on or before the 30th day following receipt of the invoice.

4. General Provisions.

a. **Conflict with Applicable Law.** Nothing in this Agreement shall be construed so as to require the commission of any act contrary to law, and whenever there is any conflict between any provision of this Agreement and any present or future law, ordinance or administrative, executive or judicial regulation, order or decree, or amendment thereof, contrary to which the parties have no legal right to contract, the latter shall prevail, but in such event the affected provision or provisions of this Agreement shall be modified only to the extent necessary to bring them within the legal requirements and only during the time such conflict exists.

b. **No Waiver.** No waiver by Buyer of any breach of any provision of this Agreement shall be deemed to be a waiver of any preceding or succeeding breach of the same or any other provision hereof.

c. **Entire Agreement.** This Agreement contains the entire contract between the parties hereto, and each party acknowledges that neither has made (either directly or through any agent or representative) any representations or agreements in connection with this Agreement not specifically set forth herein. This Agreement may be modified or amended only by agreement in writing executed by Buyer and Seller, and not otherwise.

d. **Texas Law to Apply.** This Agreement shall be construed under and in accordance with the laws of the State of Texas, and all obligations of the parties created hereunder are performable in Hidalgo County, Texas. The parties hereby consent to personal jurisdiction in Hidalgo County, Texas.

e. **Notice.** Except as may be otherwise specifically provided in this Agreement, all notices, demands, requests or communications required or permitted hereunder shall be in writing and shall either be (i) personally delivered against a written receipt, or (ii) sent by registered or certified mail, return receipt requested, postage prepaid and addressed to the parties at the addresses set forth below, or at such other addresses as may have been theretofore specified by written notice delivered in accordance herewith:

If to Buyer:
Hidalgo County
Attention: County Judge
1615 South Closner, Suite J
Edinburg, Texas 78539

If to Seller:
HD Supply Waterworks, Ltd.
Attention: Joel Garcia, District Manager
100 N. 1St Street
McAllen, Texas 78502

Each notice, demand, request or communication which shall be delivered or mailed in the manner described above shall be deemed sufficiently given for all purposes at such time as it is personally delivered to the addressee or, if mailed, at such time as it is deposited in the Unites States mail.

f. **Termination.** Buyer may terminate this Agreement at any time for any reason or no reason at all upon giving thirty (30) days written notice.

g. **Additional Documents.** The parties hereto covenant and agree that they will execute such other and further instruments and documents as are or may become necessary or convenient to effectuate and carry out the terms of this Agreement.

h. **Successors.** This Agreement shall be binding upon and inure to the benefit of the parties hereto and their respective heirs, executors, administrators, legal representatives, successors, and assigns where permitted by this Agreement.

i. **Assignment.** This Agreement shall not be assignable.

j. **Headings.** The headings and captions contained in this Agreement are solely for convenient reference and shall not be deemed to affect the meaning or interpretation of any provision or paragraph hereof.

k. **Gender and Number.** All pronouns used in this Agreement shall include the other gender, whether used in the masculine, feminine or neuter gender, and the singular shall include the plural whenever and as often as may be appropriate

l. **Authority to Execute.** The execution and performance of this Agreement by Buyer and Seller have been duly authorized by all necessary laws, resolutions or corporate action, and this Agreement constitutes the valid and enforceable obligations of Buyer and Seller in accordance with its terms.

m. **Insurance.** Seller shall provide, to the extend it deems necessary, insurance in force on all persons connected with providing services under this Contract naming Buyer as an additional insured, and shall furnish to Buyer certificates of such insurance coverage Exhibit "C", which is attached hereto.

n. **Commitment of Current Revenues Only**. In the event that, during any term hereof, the Commissioners Court of Buyer does not appropriate sufficient funds to meet the obligations of Buyer under this Agreement, Buyer may terminate this Agreement upon ninety (90) days written notice to Seller. Buyer agrees, however, to use reasonable efforts to secure funds necessary for the continued performance of this Agreement. The parties intend this provision to be a continuing right to terminate this Agreement at the expiration of each budget period of Buyer pursuant to the provisions of Tex. Loc. Govt. Code Ann. ' 271.903 (Vernon Supp. 1996).

o. **Purchasing Ethics**. Seller represents and warrants it has not, during the process of

being awarded this contract violated the following ethical standards of Buyer and, upon and after the execution of this Agreement, agrees to abide by the following ethical standards of Buyer:

(1) It shall be a breach of ethics to offer, give or agree to give any elected official, department head or employee, or former elected official, department head or employee, of Hidalgo County, or for any elected official, department head or employee or former elected official, department head or employee of Hidalgo County, to solicit, demand, accept or agree to accept from another person, entity or organization, a gratuity or an officer of employment in connection with any decision, approval, disapproval, recommendation, preparation or any part of a program requirement or purchase request, influencing the content of any specification or procurement standard, rendering of advise, investigation, auditing, or in any other advisory capacity in any proceeding or application, request for ruling, determination, claim or controversy, or other particular matter pertaining to any program requirement or a contract or subcontract, or to any solicitation or proposal therefore pending before any department or agency of Hidalgo County.

(2) It shall be a breach of ethics for any payment, gratuity or offer of employment to be made by or on behalf of a subcontractor under a contract to the prime contractor or higher tier subcontractor for any contract for Hidalgo County, or any person associated therewith, as an inducement for the award of a subcontract or order.

p. **Immunities.** Nothing in this Agreement is intended to and Buyer does not hereby waive, release or relinquish any right to assert any of the defenses Buyer enjoys by virtue of the state or federal constitution, laws, rules or regulations, and any soverign, official or qualified immunity available to Buyer as to any claim or action of any person, entity, or individual against Buyer.

EXECUTED effective as of the day and year first above written.

APPROVED AS TO FORM:
Atlas, Hall & Rodriguez, LLP

By: _____
Stephen L. Crain

COUNTY OF HIDALGO

By:_____
Ramon Garcia, County Judge

ATTEST:

_____
Arturo Guajardo Jr., County Clerk

HD Supply, Inc.

By:_____
Printed Name: _____
Title: _____

EXHIBIT “A”

REQUEST FOR SEALED BIDS (RFB) PROCUREMENT PACKET

Hidalgo County Purchasing Office
2812 S. Business Highway 281
Administration Building
Edinburg, Texas 78539
(956) 318-2626 / Fax: (956) 292-7612

March 20, 2017

Bidder's name

Address

City

State, Zip Code

Re: **HIDALGO COUNTY (All funding sources, programs & entities)**
Request for Bids - **"Pipes & Related Miscellaneous Items"**
RFB Bid No.: 2017-046-04-05-FAZ

Dear Gentleman/Ladies:

Enclosed, please find the Request for Bids (RFB) packet. **Modifications and new requirements** have been added and implemented. Carefully read and review all instructions, Requirements and Specifications.

Hidalgo County Purchasing Department welcomes and appreciates your participation in the Request for Bids process.

If any further assistance is required, please do not hesitate to call the Purchasing Department (956) 318-2626 x 4854.

Sincerely,

Martha L. Salazar, CPPB
Hidalgo County Purchasing Agent

MLS/faz
Enclosures

HIDALGO COUNTY PURCHASING OFFICE
2812 S. Business Highway 281
Administration Building
Edinburg, Texas 78539
(956) 318-2626 / Fax: (956) 292-7612

TABLE OF CONTENTS
REQUEST FOR BIDS (RFB)
HIDALGO COUNTY (All funding sources, programs & entities)
"Pipes & Related Miscellaneous Items"
RFB No.: 2017-046-04-05-FAZ

ITEM	DESCRIPTION	No. OF PAGES
1.	Request For Bid Letter	1
2.	Request for Bid, Legal Notice	8
3.	Exhibit A, Specifications	15
4.	Exhibit B, Bid Page	9
5.	Exhibit C, Insurance Requirements	4
6.	Exhibit D, (CIQ) Conflict of Interest Questionnaire (if applicable)	2
7.	Exhibit E, Vendor/Bidder Application and W-9 form(s)	6
8.	Exhibit F, Certification Regarding Debarment	1
9.	Exhibit G, Title VI Appendices "A" through "E"	6
10.	Draft Contract	8
11.	RFB Submittal Checklist	1

The above mentioned items shall be found in this Request for Bids-Goods/Products-RFB packet that is attached herewith. Should you find that any of the listed items are not attached in its entirety, please contact Purchasing by calling (956) 318-2626 or e-mail, to advise us of the missing documentation, and Purchasing will forward information either through facsimile, e-mail or by U.S. Mail.

Thank you.

Martha L Salazar
Martha L. Salazar, CPPB, Purchasing Agent

3-10-
Date

Revised 09/13/16

LEGAL NOTICE

REQUEST FOR BIDS

Hidalgo County

(All funding sources, programs & entities)

"Pipes & Related Miscellaneous Items"

RFB No.: 2017-046-04-05-FAZ

REQUEST FOR BIDS

HIDALGO COUNTY (All funding sources, programs & entities)

"Pipes & Related Miscellaneous Items"

BID OPENING DATE

APRIL 5, 2017

Contact Person:

Martha L. Salazar, CPPB, Purchasing Agent
Hidalgo County Purchasing Department
Physical Address: 2802 S. Business Hwy. 281 - Administration Building
Mailing/Postal Address: 2812 S. Business Hwy. 281
Edinburg, Texas 78539
(956) 318-2626

Form HCPD-03

1. Sealed bids will be received for **"HIDALGO COUNTY (All funding sources, programs & entities) - "*Pipes & Related Miscellaneous Items*"** in accordance with the specifications attached as **Exhibit "A"** hereto. Bids should address all specifications set forth. Bidders may suggest substitutions of features which they feel would be in the best interest of Hidalgo County ("County"). Strong rationale must be presented for any deviation from the specifications. Hidalgo County reserves the right to reject the deviation and its effect on the overall bid.

2. **One (1) original and Three (3) copies** of all bids are required with the bidders name and return address clearly typed and or/printed on upper left hand corner and the proper notation clearly typed/printed on the lower left hand corner of the envelope and/or package: **BID No.: 2017-046-04-05-FAZ "HIDALGO COUNTY (All funding sources, programs & entities) - *Pipes & Related Miscellaneous Items*"** and at County's Purchasing Department with a physical address: 2802 S. Business 281 and a mailing address: 2812 S. Business Hwy 281, Administration Building, Edinburg, Texas, **on or before 9:30 A.M, WEDNESDAY, APRIL 5, 2017. NO FACSIMILES, EMAILS OR LATE ARRIVALS WILL BE ACCEPTED. ANY RFB RECEIVED AFTER THAT TIME WILL NOT BE OPENED AND WILL BE RETURNED. OVERNIGHT MAIL MUST ALSO BE PROPERLY LABELED ON THE OUTSIDE OF EXPRESS ENVELOPE OR PACKAGE WITH REFERENCE TO** RFB No.: **2017-046-04-05-FAZ "HIDALGO COUNTY (All funding sources, programs & entities) - *Pipes & Related Miscellaneous Items*"** Hidalgo County reserves the right to refuse and reject any/all bids and to waive any/all formalities or technicalities, or to accept the bids considered the best and most advantageous to Hidalgo County.

   Additionally, all forms listed below must be properly executed and included with your bid:

   1. Legal Notice (See page 8);
   2. Bid Page – Procurement Form – Areas of Specialization (See **Exhibit "B"**);
   3. Insurance pages with Acknowledgment Forms (See **Exhibit "C"**);
   4. Form CIQ-Conflict of Interest Questionnaire (See **Exhibit "D"**);
   5. Vendor Bidder Application & W-9 forms (See **Exhibit "E"**);
   6. Certification Regarding Debarment (See **Exhibit "F"**); and
   7. SAMS.gov Registration Acknowledgement (See Number 18 below).

3. Hidalgo County reserves the right to: A. separate and accept, or eliminate any item(s) listed under this bid that it deems necessary to accommodate budgetary and/or operational requirements; B. reject any or all bids submitted and further reserves the right to design the evaluation criteria to be used in selecting the lowest and best bid for approval; C. award the bid to one bidder or to multiple bidders if the County determines it is in its best interest to do so; D. award the contract to the responsible bidder who submits the lowest and best bid. "Lowest and best" means a bid or offer providing the best value considering associated direct and indirect costs, including transport, maintenance, reliability, and life cycle, warranties, and customer service after a sale.

4. The Bidder shall not substitute items named in the bid without the express written consent of Hidalgo County. Failure of the delivered item to perform as specified or failure to meet the stated delivery schedule shall release Hidalgo County from all obligations to the contracting party with regard to the item(s) in question. In such event, County may elect to award the contract to the next-lowest responsible bidder, or to reject all bids and re-advertise.

5. For work to be performed at a County owned or operated location, each bidder shall, in its sole discretion, visit the job site before preparing the bid and thoroughly familiarize himself/herself with existing conditions. Bidder should take field dimensions and note all circumstances which affect the dollar amount of the bid.

6. Descriptive specifications are referenced in this document to indicate the general kind and quality of equipment desired by Hidalgo County. Due to various styles and models of equipment, bidders are required to include illustrations, specifications, explanation of warranties, and service data with their bid including catalogue numbers and any necessary references.

7. No bid may be withdrawn within thirty (30) days from the scheduled time to open bids.

8. Proposed prices are to remain firm for a minimum of ninety (90) days after bid opening.

9. Any interpretations, amendments, corrections or changes to this bid document must be in a written addendum and signed by the County Judge or his designee. Addenda will be mailed to all who are known to have received a copy of the Request for Bids. Bidders shall acknowledge receipt of all addenda as a part of their bid.

10. County reserves the right to accept or reject any or all Bids.

11. Costs are to be net F.O.B., County Prepaid.

12. County is exempt from Federal Excise Tax, State Tax and Local Tax. Do Not include tax in cost figure. If it is determined that tax was included in the cost figures it will not be included in the tabulation of any awards. Tax exemption certificates will be furnished upon request.

13. Funds for this procurement have been provided through the County budget for this fiscal year only. County, on an annual basis, has the right to reconsider a contract during the budget process for ensuing years if financial resources of County are insufficient to meet the liabilities of said contract. The award of a bid or contract hereunder will not be construed to create a debt of the County which is payable out of funds beyond the current fiscal year.

14. Upon award and prior to execution of a contract, Sole Proprietorships are required to submit a copy of their social security cards to the Hidalgo County Auditor's Office in order to establish an account with the County. All awarded vendors must submit a completed W-9 and a copy of their Federal ID Number Certificate.

15. DELIVERY INSTRUCTIONS:
    - No deliveries accepted after 3:00 P.M., Monday-Friday.
    - At least seventy two (72) hours prior notice of delivery must be given to Martha L. Salazar, Purchasing Agent before delivery will be accepted.
    - If you need additional information call the office listed below:

      Hidalgo County Purchasing Department
      Martha L. Salazar, Purchasing Agent
      (956) 318-2626

16. BILLING AND PAYMENT INSTRUCTIONS:
    - Invoices must include:
      a) Name and address of successful bidder
      b) Name and address of receiving department or official
      c) Purchase Order Number (if any)
      d) Notation - "HIDALGO COUNTY (All funding sources, programs & entities) -RFB No.: 2017-046-04-05-FAZ "*Pipes & Related Miscellaneous Items*"

Descriptive information as to the items or services delivered, including product code, item number, quantity, etc.

e) Contract number must be indicated on all invoices

- Discount payments will be considered when offered.
- Contact person for Billing and Payment questions:

Hidalgo County Auditor's Office
2808 S. Business Hwy 281
Edinburg, TX 78539
(956) 318-2511

17. SCHEDULE OF EVENTS

Bid Opening, 9:30 A.M.	**APRIL 5, 2017**
Award of Contract	**, 2017**
Commence Work or Deliver Products	**, 2017**

18. BID OR PERFORMANCE BOND AND DEBARMENT CERTIFICATION; PAYMENT UNDER CONTRACT:

. If the contract proposed is for the construction of public works or is for a contract for goods & services exceeding $100,000, all bidders shall furnish a good and sufficient bid bond in the amount of five percent of the total contract price. A bid bond must be executed with a surety company authorized to do business in Texas. All bidders are also required to furnish a certification or acknowledgment stating that the contractor or vendor is free from suspension or debarment pursuant to federal regulation 45CFR Part 76. Register at SAMs System for Award Management @ www.sam.gov.

. Together with the signing of a contract or issuance of a purchase order following the acceptance of a bid, and prior to commencement of the actual work, the bidder shall furnish a performance bond to the County for the full amount of the contract, if that contract exceeds $50,000.

. If the contract is for $50,000 or less, no money will be paid to the contractor until completion and acceptance of the work or the fulfillment of the purchase obligation to the County, and, if applicable, the receipt by County of satisfactory evidence that all subcontractors and material men have been paid.

. If a contract is for the construction, alteration or repair of public buildings or public works, the contractor *shall* provide a payment bond for a contract in excess of Twenty Five Thousand Dollars ($25,000.00), as required by Tex. Govt. Code Ch. 2253.

For requirements contracts, bond requirements are determined by applying the proposed unit price to the estimated quantities included in the specifications.

19. TITLE VI NOTICE/ N ,DISCRIMATION

a. "The County of Hidalgo, in accordance with the provisions of Title VI of the Civil Rights Act of 1964 (78 Stat.252, 42 U.S.C. §§2000d to 2000d-4) and the Regulations, hereby notifies all bidders that it will affirmatively ensure that any contract entered into pursuant to this advertisement, disadvantaged business enterprises will be afforded full and fair opportunity to submit bids in response to this invitation and will not be discriminated against on the grounds of race, color, or national origin in consideration for an award."

b. The appropriate clauses of Appendices "A" through "E" as delineated in the USDOT Standard Title VI/Nondiscrimination Assurances - Specific Assurances are hereby incorporated by reference as applicable. Title VI Appendices "A" through "E" are attached as **Exhibit "G.**

c. Bidder will attach all applicable notices to which it is obligated to provide or submit as part of the bid, including Form FHWA 1273 to be submitted by all contractors and subcontractors in relation to construction contracts.

20. ETHICAL STANDARDS:

. It shall be a breach of ethics to offer, give or agree to give any elected official, department head or employee, or former elected official, department head or employee, of the County, or for any elected official, department head or employee or former elected official, department head or employee of the County, to solicit, demand, accept or agree to accept from another person, entity or organization, a gratuity or an offer of employment in connection with any decision, approval, disapproval, recommendation, preparation or any part of a program requirement or purchase request, influencing the content of any specification or procurement standard, rendering of advice, investigation, auditing, or in any other advisory capacity in any proceeding or application, request for ruling, determination, claim or controversy, or other particular matter pertaining to any program requirement or a contract or subcontract, or to any solicitation or proposal therefore pending before any department or agency of the County.

. It shall be a breach of ethics for any payment, gratuity or offer of employment to be made by or on behalf of a subcontractor under a contract to the prime contractor or higher tier subcontractor for any contract for the County, or any person associated therewith, as an inducement for the award of a subcontract or order.

. No public official shall have an interest in a contract awarded hereunder except in accordance with Tex. Loc. Govt. Code Chapter 171.

NOTICE:
ALL COMMUNICATIONS BY A VENDOR TO THE COUNTY, ITS OFFICIALS, AND DEPARTMENT HEADS REGARDING THIS PROCUREMENT SHALL BE DONE THROUGH THE HIDALGO COUNTY PURCHASING DEPARTMENT.

21. DISCLOSURE OF CONFLICT OF INTEREST

. Effective January 1, 2016, Chapter 176 of the Texas Local Government Code requires that any vendor, person, consultant or contractor considering doing business with Hidalgo County ("the County") to disclose in the Conflict of Interest Questionnaire (the "CIQ") attached as Exhibit E, the vendor, person, consultant or contractor's affiliation or business relationship that might cause a conflict of interest with the County. By law, the CIQ must be filed with the Hidalgo County Clerk's Office no later than the seventh business day after the date the person becomes aware of facts that require that statement to be filed. The disclosure requirement applies to a person or business who contracts or seeks to contract with Hidalgo County for the

sale or purchase of property, goods or service. Any purchase order or contract resulting from this process shall be considered null and void if the successful bidder fails to comply with Texas Local Government Code Chapter 176. Vendors, consultants, contractors and others who desire to conduct business with Hidalgo County are encouraged to refer to Texas Local Government Code Chapter 176 for the details of this law. An offense under Texas Local Government Code Chapter 176 is a Class C Misdemeanor.

Completed Form CIQ must be submitted to the Hidalgo County Clerk's Office located at 100 N. Closner, Edinburg, Texas 78539 - Hidalgo County Courthouse.

COMPLETION AND SUBMISSION OF FORM CIQ IS THE SOLE RESPONSIBILITY OF THE PROSPECTIVE RESPONDENT. QUESTIONS REGARDING COMPLIANCE SHOULD BE DIRECTED TO YOUR LEGAL COUNSEL.

22. CERTIFICATE OF INTERESTED PARTIES (FORM HB1295)

As of January 1, 2016, to comply with Texas Government Code Section §2252.908, and the rules issued by the Texas Ethics Commission found in Title 1, Section 46.1, 46.3 and 46.5 of the Texas Administrative Code, we have updated and revised our RFB packet. In accordance with these requirements, business must submit a completed Certificate of Interested Parties Form 1295 to the County before the County may enter into a contract with the business entity. In box 3 of Form 1295, you will provide the RFB Project No. (2017-046), as shown on the packet. Once completed and filed with the Texas Ethics Commission, Form 1295 must be printed and signed in the presence of a notary and submitted to our office either by facsimile transmission to (956) 292-7612 or via email to: matilde.faz@co.hidalgo.tx.us. Hidalgo County cannot enter into a contract until Form 1295 is submitted. Therefore, failure to timely submit Form 1295 signed and notarized may result in delay of award. Full instructions for completion and submittal of Form 1295 may be found on the Texas Ethics Commission website:

https://www.ethics.state.tx.us/tec/1295-Info.htm

THE AWARDED VENDOR WILL HAVE THIRTY (30) DAYS FROM THE DATE THE HIDALGO COUNTY COMMISSIONER'S COURT APPROVES THIS AGREEMENT TO SUBMIT THE SIGNED NOTARIZED FORM 1295. *HIDALGO COUNTY CANNOT ENTER INTO A CONTRACT UNTIL FORM 1295 IS SUBMITTED.*

23. If, during the life of any contract or bid awarded, the successful bidder's net prices generally available to other customers for items awarded herein are reduced below the contracted price, it is understood and agreed that the benefits of such reduction shall be extended to the County.

24. Bids, and all goods and services provided hereunder, shall comply with all federal, state and local laws concerning this type(s) of goods and/or services.

25. Minimum Standards for Responsible Prospective Bidders: A prospective bidder must affirmatively demonstrate bidder's responsibility. A prospective bidder, by submitting a bid, represents to County that it meets the following requirements:
    - Possess or is able to obtain adequate financial resources as required to perform under the bid;
    - Be able to comply with the required or proposed delivery schedule;
    - Have a satisfactory record of performance;
    - Have a satisfactory record of integrity and ethics;
    - Be otherwise qualified and eligible to receive an award.

26. Successful bidder will pay or cause to be paid, without cost or expenses to County, all FICA, FUTA/SUTA and Federal Income Withholding Taxes of all employees, and all wages and benefits as required by Federal or State law. Successful bidder's officers, agents and/or employees will not be entitled to any benefits of an employee or elected official of County, including, but not limited to, benefits associated with County's civil service system.

27. Any contract award to a successful bidder will be in effect until (a) the contract expires, (b) delivery and acceptance of products, and/or performance of services ordered, or (c) terminated by County with thirty day's written notice prior to cancellation.

28. County reserves the right to enforce performance of any contract awarded hereunder in any manner prescribed by law or deemed to be in the best interest of the County in the event of breach or default by successful bidder; County reserves the right to terminate any contract immediately in the event a successful bidder fails to:

    A. Meet schedules;
    B. Pay any required fees or taxes; or
    C. Otherwise perform in accordance with the specifications.

29. Successful bidder shall defend, indemnify and save harmless County and all its elected officials, officers, agents and employees from all suits, actions, or other claims of any character, name and description brought for or on account of any injuries or damages received or sustained by any person, persons, or property on account of any negligent act or fault of the successful bidder, or of any agent, employee, subcontractor or supplier of successful bidder in the execution of, or performance under, any contract which may result from bid award or which arises from any event or casualty happening on or within County premises themselves or happening upon or in any halls, elevators, entrances, stairways or approaches of or to such County facilities. Successful bidder shall pay any judgment with costs which may be obtained against county growing out of such injury or damages, and shall, upon request, provide a defense to County by counsel reasonably acceptable to County. Successful bidder's indemnity hereunder shall include, but is not limited to, claims relating to patent, copyright or trademark infringement, and the like, arising out of the goods and services provided by successful bidder.

30. Successful bidder shall warrant that all items/services shall conform to the specifications and/or all warranties provided under the Uniform Commercial Code and be free from all defects in material, workmanship and the like. Items supplied under a contract pursuant to this Request for Bids shall be subject to County's approval. Items found to be defective or not meeting specifications shall be replaced by successful bidder within two business days at no expense to County. Items not picked up within one (1) week after notification shall be deemed a donation to County and may be used or disposed of at County's discretion and without waiver of any other rights of County as to the item's nonconformity.

31. This document and any disputes arising hereunder shall be governed and construed according to the laws of the State of Texas, and will be performable exclusively in Hidalgo County, Texas.

32. The successful bidder shall not assign, sell, transfer or convey its rights under any awarded contract, in whole or in part, without the prior written consent of County.

LEGAL NOTICE

Bid

For

HIDALGO COUNTY (All funding sources, programs & entities)

"Pipes & Related Miscellaneous Items"

BID No.: 2017-046-04-05-FAZ

To: Martha L. Salazar, CPPB, Purchasing Agent
Physical Address: 2802 S. Business Hwy. 281 - Administration Building
Mailing/Postal Address: 2812 S. Business Hwy. 281
Edinburg, Texas 78539

In accordance with the Specifications, and subject to all laws and regulations of the United States and state and local laws, the undersigned bidder proposes and commits to furnish all labor, equipment, material, software and services as set forth in the documents hereinbefore mentioned. The undersigned bidder further agrees, upon acceptance of its bid, to execute a contract and/or Purchase Order issued by Hidalgo County for performing and completing the work described in the Specifications within the time stated and for the prices proposed in the documents attached hereto and made a part hereof.

Bidder acknowledges receipt of all of the pages of the documents referenced in the Invitation to Bid Checklist presented in connection with this procurement. Bidder understands that Hidalgo County reserves the right to reject any or all bids and further reserves the right to design the evaluation criteria to be used in selecting the lowest and best bid.

Bidder agrees that this bid shall be good and may not be withdrawn for a period of ninety (90) calendar days after the scheduled closing time for receiving bids, as contained in the Specifications.

Respectfully submitted,

Bidder: _____

Address: _____

By: _____

Printed Name: _____

Title: _____

EXHIBIT "A"

SPECIFICATIONS/REQUIREMENTS

REQUEST FOR BIDS

Hidalgo County

(All funding sources, programs & entities)

"Pipes & Related Miscellaneous Items"

RFB No.: 2017-046-04-05-FAZ

SPECIFICATIONS AND/OR REQUIREMENTS:

Bidder(s) shall supply, where needed (on an "as needed" basis) in Hidalgo County or job site, **"PIPES, Inlets, Manholes & Miscellaneous Items".**

Bid information will be furnished to all Hidalgo County departments requiring pipes and **delivery** will involve numerous locations within Hidalgo County.

I. LOCATIONS – Departments requiring pipes.

II. DELIVERY INSTRUCTIONS
Delivery hours will be arranged with each department requiring pipes. **Bidder(s) shall deliver** the amount of product requested to **location or job site** required within 24 hours, or earlier, if requested. Bidder(s) agree(s) that, to the extent an item is unavailable from bidder's own inventory; bidder(s) will be responsible for locating an alternative supplier and for providing the product to Hidalgo County for the bid price. **VENDOR(S) MUST UNLOAD ANY/ALL ITEMS LISTED AT THE REQUESTED SITE(S).**

III. BID AWARD

1. Hidalgo County may award the bid on a lump sum basis to one (1) bidder or to multiple bidders on an item by item basis in each category, whichever is in the best interest of the County. For evaluation and consideration of items bid, samples will be submitted upon request. Categories will be as follows:

   - Category A: Pipes
   - Category B: Inlets
   - Category C: Manholes
   - Category D: Miscellaneous

CATEGORY (A) – PIPES
CORRUGATED PVC STORM SEWER PIPE SPECIFICATION

1.0 SCOPE:
Polyvinyl chloride (PVC) storm sewer/drain pipe and fitting shall be manufactured and tested in accordance with AASHTO Specifications M304.

2.0 MATERIAL AND DESIGN
The structural design of thermoplastic pipes shall be in accordance with AASHTO Standard Specifications for Highway Bridge; Section 8 titled "Soil-Thermoplastic Pipe Interaction Systems". To ensure long-term design strength properties, PVC Pipe shall be manufactured from 12454B or 12454C cell class material per ASTM D1784.

3.0 JOINING SYSTEM:
Joints may be either plastic sleeve with gaskets or an integral bell-gasket joint. When the joint is assembled, it shall prevent misalignment of adjacent pipes and form either a soil (2 psi hydrostatic test per AASHTO Standard Specifications for Highway Bridges: Section 26.4.2.4) or watertight joint (10.8 psi test per ASTM D3212 "Standard Specifications for Joints for Drain and Sewer Plastic Pipes Using Flexible Elastomeric Seals" as required.

4.0 INSTALLATION
PVC thermoplastic pipe and fittings manufactured to these specifications shall be installed in accordance with ASTM D2321-89.

Heights of Cover

DIAMETER	CORRUGATED PVC PIPE (AASHTO M304)
INCHES	FEET
12	49
15	47
18	51
24	50
30	50

*Minimum cover (H-20 live load) = (ASTM D2321 with Class A1 embedment)

CORRUGATED STEEL STORM SEWER PIPE SPECIFICATIONS

1.0 GENERAL
This item shall govern the furnishings of corrugated steel pipe and pipe-arch for culverts and storm sewer for the types, sizes and designations as specified in these specifications.

2.0 MATERIALS
This pipe shall be fabricated from sheets conforming to the current AASHTO M-274 (ASTM A819) specification for ALUMINIZED STEEL Type 2 material or the current AASHTO M-246 (ASTM 742) specification for POLYMER coated galvanized steel material.

3.0 MANUFACTURE
This pipe shall meet the requirements of AASHTO M-36 (ASTM A760) for corrugated steel pipe. All pipe shall be manufactured with a minimum of two-re-rolled annular ends.

4.0 CLASSIFICATION (TYPE) FOR DIAMETERS 46" THROUGH 96"
This pipe shall be manufactured to conform to the current AASHTO M-36 (ASTM A 760) specification and shall have an extended helical corrugation pattern of ¾ x ¾" 7 ½" as described in AASHTO M-36 (ASTM A 760).

All round pipe shall be manufactured to conform to the current AASHTO M 245 (ASTM A 762 & A 760) specification and shall have a full circular cross section with a smooth steel liner and helically corrugated shell, integrally attached at helical lock seams. All round pipe shall conform to the Type IA pipe classification. All pipe arches shall conform to the Type IIA classification.

Type I pipe classifications will also be considered. These pipes shall be manufactured out of ALUMINIZED STEEL Type 2 or POLYMER coated galvanized steel as referenced above.

5.0 POST APPLIED COATING
All Pipes manufactured with ALUMINIZED STEEL Type 2 shall be fully coated both inside and out with a minimum thickness of 0.05 in. (1.3 mm) measured from the crest of the corrugations, on the top of ribs, (as in Type IR pipe) or on the smooth inside surface of the pipe. The coating shall be uniform Class B (bituminous) or Class M (mastic) material as described in AASHTO M-190 (ASTM A 849).

6.0 GAUGE
Unless otherwise specified on the specifications, gauges shall be minimum as follows:

TYPE IR (SPIRAL CORRUGATION)	
DIAMETER	GAUGE
36-48"	16
54-60"	14
66-96"	12
TYPE I (STANDARD)	
54-138"	12
144"	10
All Types IA shall be 12 gauge shell and 18 gauge liner.	

7.0 COUPLING BANDS

Coupling bands shall be of the same base material and coating as the pipe. Coupling bands shall lap evenly on each of the pipes being connected and shall fit securely into at least one full circumferential corrugation to form a tightly closed joint.

All pipes shall be field jointed with corrugated locking bands. Connecting bands shall be drawn together by means of not less than two bolts not less than ½ in. (13 mm) diameter through angles or bar and strap device suitable welded or riveted.

Coupling bands shall be no more than three normal sheet thickness lighter than the pipe to be connected and in no case thinner than 0.052 in. (1.32 mm).

8.0 INSTALLATION

Corrugated steel pipe shall be installed as outlined in AASHTO Standard Specifications for Highway Bridges, Section 26 and ASTM A798.

9.0 MEASUREMENT

Corrugated steel pipe will be measured by linear foot. Such measurements shall be made between the ends of the barrel along its central axis. Where spurs or branches, or connections to existing pipe lines are involved, measurements of the spur or new connecting pipe will be made from the intersection of the central axis with the outside surface of the pipe into which it connects. Where inlets, headwalls, catch basins, manholes, junction chambers or other structures are included in lines of pipe that length of pipe tying into the other structure wall will be included for measurement but no other portion of the structure length or width will be included.

For multiple pipes, the measured length will be the sum of the lengths of the barrels, measured as prescribed above.

In the event of a change in design which either increases or decreases the quantity of pipe, the variation in quantity will be measured as prescribed above and the quantity shown in the specifications will be increased or decreased as the case may be.

10.0 PAYMENT

Payment for corrugated steel pipe, measured as prescribed above will be made at the contract unit price bid per linear foot for various sizes, gauges and types of corrugated steel pipe.

Payments shall be full compensation for furnishings, transporting and installing the pipe. This includes materials, labor, equipment, tools and incidentals necessary to complete the installation in accordance to these specifications.

CATEGORY (A) – PIPES
REINFORCED CONCRETE PIPE - GASKET JOINT PIPE SPECIFICATIONS

REINFORCED CONCRETE PIPE - GASKET JOINT PIPE SPECIFICATIONS						
CLASS III - ASTM C76 STANDARDS						
PIPE I.D.	WALL THICKNESS	CONCRETE STRENGTH	CAGE			PIPE WEIGHT
(in)	(in)	(PSI)	TYPE	INNER	OUTER	(LBS)
15	3.00	4,000	SINGLE	3"x6"-W1.75/W2.5		1,520
18	3.25					1,920
24	3.75					2,840
30	4.25			3"x6"-W2.5/W2.5		4,020
36	4.75		DOUBLE		3"x6"-W1.75/W2.5	5,520
42	5.25			3"x8"-W3.0/W2.0		7,100
48	5.75			3"x6"-W4.0/W2.5	3"x6"-W2.5/W2.5	8,280
54	6.25			3"x8"-W5.25/W2.5	3"x6"-W3.5/W2.5	9,800
60	6.75			2"x6"-W4.5/W2.5	3"x6"-W4.0/W2.5	12,184
72	7.75			2"x6"-W6.0/W2.5	3"x8"-W5.75/W3.0	15,900

REINFORCED CONCRETE PIPE - GASKET JOINT PIPE SPECIFICATIONS						
CLASS IV - ASTM C76 STANDARDS						
PIPE I.D.	WALL THICKNESS	CONCRETE STRENGTH	CAGE			PIPE WEIGHT
(in)	(in)	(PSI)	TYPE	INNER	OUTER	(LBS)
15	3.00	4,000	SINGLE	3"x6"-W2.5/W2.5		1,520
18	3.25					1,920
24	3.75			3"x6"-W3.5/W2.5		2,840
30	4.25			3"x6"-W4.0/W2.5		4,020
36	4.75		DOUBLE	3"x6"-W3.5/W2.5	3"x6"-W2.0/W2.0	5,520
42	5.25			3"x8"-W5.0/W2.5	3"x6"-W3.0/W2.5	7,100
48	5.75			3"x6"-W6.5/W3.0	3"x6"-W4.0/W2.5	8,280
54	6.25			2"x8"-W5.75/W3.0	3"x8"-W5.0/W2.5	9,800
60	6.75	5,000		2"x8"-W7.0/W3.0	3"x6"-W6.25/W3.0	12,184
72	7.75			2"x8"-W10.0/W4.0	2"x8"-W6.0/W2.5	15,900

REINFORCED CONCRETE PIPE - GASKET JOINT PIPE SPECIFICATIONS						
CLASS V - ASTM C76 STANDARDS						
PIPE I.D.	WALL THICKNESS	CONCRETE STRENGTH	CAGE			PIPE WEIGHT
(in)	(in)	(PSI)	TYPE	INNER	OUTER	(LBS)
15	3.00	6,000	SINGLE	3"x6"-W2.5/W2.5		1,520
18	3.25					1,920
24	3.75		DOUBLE	3"x6"-W3.0/W2.5	3"x6"-W2.5/W2.5	2,840
30	4.25			3"x6"-W4.5/W2.5	3"x6"-W3.0/W2.5	4,020
36	4.75			2"x6"-W4.5/W2.5	3"x6"-W4.0/W2.5	5,520
42	5.25			2"x8"-W6.0/W2.5	3"x8"-W5.75/W3.0	7,100
48	5.75			2"x8"-W8.0/W3.5	3"x8"-W7.0/W3.0	8,280
54	6.25			2"x8"-W10.0/W4.0	2"x8"-W6.0/W2.5	9,800
60	6.75			2"x8"-W11.5/W4.5	2"x8"-W7.0/W3.0	12,184
72	7.75			2"x6"-W8.5/W6.5	2"x8"-W10.0/W4.0	15,900

General Note:

1. Concrete gasket pipe shall meet Bureau of Reclamation R-4 Joint O-Ring gasket ASTM C361 Standards and price quote shall be included with the pipes.
2. All welded Wire Fabric Steel shall meet ASTM 82 and ASTM 185 Standards.
3. Aggregates shall meet ASTM C 33 Standards.
4. Fly Ash shall meet ASTM C 618-97 Standards.
5. Type II Cement shall meet ASTM C 150 Standards.
6. The maximum lengths of pipe sections shall be 8 feet.

The following are the technical requirements for the Reinforced Gasket Joint Concrete Pipe ASTM C-76 Class III.

D.1 GENERAL:
Pipe shall be manufactured and tested according to ASTM Designation: C-361 except as hereinafter changed and further specified. The requirements for cement, admixture, concrete strength, wall thickness, joints, manufacture and handling of pipe shall be in accordance with Paragraphs C-2, C-3, C-4, C-5, C-6, C-7, C-8, C-10, C-11, C-12, C-13 and C-14, respectively.

D.2 STEEL REINFORCEMENTS:
The reinforcing steel shall conform to requirements of Class III reinforced pipe, ASTM Designation: C-76. Reinforcements may be circular or elliptical.

D-3 PHYSICAL TEST REQUIREMENTS:
The test for internal hydrostatic pressure on the pipe shall not be less than that shown in Table "A" Paragraph C-10 thereof. The test for minimum 3-edge bearing load (pounds per linear foot) shall not be less than that required for Class III reinforced concrete pipe, ASTM Designation C-76.

RELATED PARAGRAPHS C-2 CEMENT:
The cement shall be Type II, low alkali in accordance with Federal Specifications SS-C 1960/3. The Contractor shall furnish certificates from the mill manufacturing the cement evidencing compliance with these specifications.

C-3 ADMIXTURE:
All concrete in concrete pipe placed by the placing and vibrated method shall have air-entraining agent conforming to ASTM Designations: C260. The amount of air-entraining agent used shall be such as will effect the entrainment of 2-1/2 $\pm$ 1 percent of air by volume, of the concrete as discharged from the mixer. Natural cement, slag cement, pozzolon or other mixtures shall not be added to the concrete without the written authorization of the Engineer in charge of the project.

C-4 CONCRETE STRENGTH:
The strength requirements shall be 4,000 pounds per square inch in 28 days. The 4,000 PSI concrete test shall be in accordance with the latest edition of ASTM Designation: C-76.

C-5 CONCRETE MIXTURE:
The aggregate requirements of the latest ASTM Designation: C361 are changed to include, "the maximum size coarse aggregate shall be of the largest size practicable for placement considering the wall thickness of the pipe but shall not exceed 1-1/2 inches. The percentage of coarse aggregate to the total aggregate shall be as high as practicable for manufacture of the pipe".

C-6 CURING REQUIREMENTS:
The curing requirements in the latest edition of ASTM Designation: C361 are changed to include this additional requirement at the end of the paragraph: "If forms are stripped immediately after the pipe is cast and moved to the curing area, the concrete pipe shall not be lifted or tipped until a minimum concrete compressive strength of 2,500 PSI is attained. Determination of the required strength shall be accomplished by tests of concrete cylinders as described in the latest edition of ASTM Designation: C361".

C-7 WALL THICKNESS:
The thickness of the pipe wall shall be not less than that shown in Table A, Paragraph C-10, Physical Test Requirements", hereof.

C-8 PIPE LENGTHS:
The maximum lengths of pipe sections shall be 8 feet.

C-10 PHYSICAL TEST REQUIREMENTS:
The hydrostatic test pressures for the pipe and rubber gasket joint required in the latest edition of ASTM Designations 361 are changed to those specified in Table A. The Contractor shall also perform external load crushing strength test on the pipe. The external load crushing strength test shall be in accordance with the minimum three-edge bearing load as specified in Table A.

TABLE A: PHYSICAL TEST REQUIREMENTS

Internal diameter (inches)	Minimum Shell Thickness (inches)	Internal Hydrostatic Pressure On Individual Section of Pipe (PSI)	Minimum 3-Edge Bearing Load (pounds per linear foot)
15	2	50	1,700
16	2	50	1,800
18	2	50	1,900
21	2 – ¼	45	2,100
24	2 – ½	40	2,200
30	2 – ¾	35	2,500
36	3	30	4.050
42	4 – ½	30	4,725
48	5	30	5,400
54	4 – ½	25	6,075
60	6	25	6,750
72	7	25	8,100

C-11 JOINTS:
Joints shall be made with round rubber gasket in conformance with the latest edition of ASTM Designation: C-361 and price quote shall be included with the pipes.

REINFORCED CONCRETE PIPE - TONGUE & GROOVE PIPE SPECIFICATIONS

REINFORCED CONCRETE PIPE - TONGUE & GROOVE PIPE SPECIFICATIONS						
CLASS III - ASTM C76 STANDARDS						
PIPE I.D.	WALL THICKNESS	CONCRETE STRENGTH	CAGE			PIPE WEIGHT
(in)	(in)	(PSI)	TYPE	INNER	OUTER	(LBS)
15	2.25	4,000	SINGLE	3"x6"-W1.75/W2.5		1,045
18	2.50					1,400
24	3.00					2,100
30	3.50			2"x8"-W5.0/W2.5		3,050
36	4.00			2"x8"-W6.0/W2.5		4,200
42	5.25		DOUBLE	3"x8"-W3.0/W2.0	3"x6"-W1.75/W2.5	6,250
48	5.75			3"x6"-W4.0/W2.5	3"x6"-W2.5/W2.5	8,100
54	6.25			3"x8"-W5.25/W2.5	3"x6"-W3.5/W2.5	9,420
60	6.75			2"x6"-W4.5/W2.5	3"x6"-W4.0/W2.5	11,500
72	7.75			2"x6"-W6.0/W2.5	3"x6"-W5.75/W3.0	15,900

REINFORCED CONCRETE PIPE - TONGUE & GROOVE PIPE SPECIFICATIONS						
CLASS IV - ASTM C76 STANDARDS						
PIPE I.D.	WALL THICKNESS	CONCRETE STRENGTH	CAGE			PIPE WEIGHT
(in)	(in)	(PSI)	TYPE	INNER	OUTER	(LBS)
15	3.00	4,000	SINGLE	3"x6"-W2.5/W2.5		1,045
18	3.25			2"x6"-W2.5/W2.5		1,400
24	3.75			2"x6"-W4.5/W2.5		2,100
30	4.25			2"x8"-W6.0/W2.5		3,050
36	4.75		DOUBLE	2"x8"-W5.0/W3.0	3"x8"-W4.5/W2.5	4,200
42	5.25			3"x6"-W5.0/W2.5	3"x6"-W3.0/W2.5	6,250
48	5.75			3"x6"-W6.5/W3.0	3"x6"-W4.0/W2.5	8,100
54	6.25			2"x8"-W5.75/W3.0	3"x6"-W5.0/W2.5	9,420
60	6.75			2"x8"-W7.0/W3.0	3"x8"-W6.25/W3.0	11,500
72	7.75	5,000		2"x8"-W10.0/W4.0	2"x8"-W6.0/W2.5	15,900

REINFORCED CONCRETE PIPE - TONGUE & GROOVE PIPE SPECIFICATIONS						
CLASS V - ASTM C76 STANDARDS						
PIPE I.D.	WALL THICKNESS	CONCRETE STRENGTH	CAGE			PIPE WEIGHT
(in)	(in)	(PSI)	TYPE	INNER	OUTER	(LBS)
15	3.00	6,000	SINGLE	3"x6"-W3.5/W2.5		1,045
18	3.25			3"x8"-W4.75/W2.5		1,400
24	3.75			3"x8"-W6.0/W2.5		2,100
30	4.25		DOUBLE	2"x8"-W7.0/W3.0	3"x8"-W6.25/W3.0	3,050
36	4.75			2"x8"-W8.25/W3.5	2"x8"-W5.0/W3.0	4,200
42	5.25			2"x8"-W6.0/W2.5	3"x8"-W5.75/W3.0	6,250
48	5.75			2"x8"-W8.0/W3.5	3"x8"-W7.0/W3.0	8,100
54	6.25			2"x8"-W10.0/W4.0	2"x8"-W6.0/W2.5	9,420
60	6.75			2"x8"-W11.5/W4.5	2"x8"-W7.0/W3.0	11,500
72	7.75			2"x6"-W8.5/W6.5	2"x8"-W10.0/W4.0	15,900

General Note:

1. All welded wire fabric steel shall meet ASTM 82 and ASTM 185 standards.
2. Aggregates shall meet ASTM C 33 standards.
3. Fly ash shall meet ASTM C 618-97 standards.
4. Type II cement shall meet ASTM C 150 standards.
5. Concrete joint sealant shall meet ASTM C 990 standards.
6. Concrete joint primer shall meet ASTM D 41 standards.
7. The maximum lengths of pipe sections shall be 8 feet.

REINFORCED POLYETHYLENE PIPE SPECIFICATIONS

SCOPE
This specification(s) describes reinforced polyethylene pipe for use in gravity flow storm drain and culvert applications in 24" through 96" nominal diameters.

DESCRIPTION
This pipe shall have a smooth waterway and exterior profile that is reinforced with high strength galvanized steel ribs. The continuous reinforcing ribs are completely encased within the polyethylene profile. Reinforced polyethylene pipe is manufactured using a helical winding process that results in continuously fusion welded circumferential lap seam. The pipe profile is manufactured using high pressure-rated thermoplastic meeting the requirements of ASTM F2562 "Standard Specification for Steel Reinforced Thermoplastic Ribbed Pipe and Fittings for Non-Pressure Drainage and Sewerage". For the purposes of hydraulic design, the recommended Manning's "n" value shall be 0.013 for pipe diameters included within this specification.

MATERIAL PROPERTIES
Virgin high density polyethylene pressure-related resins are used to manufacture reinforced polyethylene pipe and complimentary fabricated fittings. Resins shall conform to be minimum requirements of cell classification 345464 C as defined and described in the latest version of ASTM D3350 "Standard Specification for Polyethylene Plastic Pipe and Fittings Materials".

JOINT PERFORMANCE
Pipe lengths shall be joined on site using bell & spigots especially designed for reinforced polyethylene pipe. Both bell and spigot shall be reinforced with steel that is fully encased in pressure rated high density polyethylene meeting the requirements set forth in the above Material Properties paragraph and shall be watertight to an internal water pressure of 15 PSI when tested in accordance with ASTM D3212 "Standard Specification for Joints for Drain and Sewer Plastic Pipes Using Flexible Elastometric Seals".

FITTINGS
All fittings shall be fabricated from reinforced polyethylene pipe using fusion welded construction to ensure no loss of structural integrity of water-tightness at welded seams and joints.

INSTALLATION
Installation shall be in accordance with ASTM D2321 "Practice for Underground Installation of Thermoplastic Pipe for Sewers and Other Gravity-Flow Applications" along with product-specific recommendation by the manufacturer. Minimum cover shall be 1 ft. and maximum cover shall be 30 ft.

AWWA C900 PVC PLASTIC PRESSURE PIPE SPECIFICATIONS

SCOPE
This specification designates general requirements for 4" through 12" C.I.O.D.'s pipe produced in blue or white un-plasticized polyvinyl chloride (PVC) plastic pressure pipe with integral bell and spigot joints for the conveyance of water and other fluids. This pipe shall meet the requirements of AWWA Standard C900 "Polyvinyl Chloride (PVC) Water Distribution Pipe".

MATERIALS
All pipes shall be made from quality PVC resin, compounded to provide physical and mechanical properties that equal or exceed cell class 12454 as defined in ASTM D1784.

HYDROSTATIC PROOF TESTING
Each standard length of pipe is tested up to 400 psi for Pressure Class 165; 600 psi for Pressure Class 235; 800 psi for Pressure Class 305 for a minimum of 5 seconds. The integral bell shall be tested with the pipe.

STANDARD LAYING LENGTHS
Standard laying lengths are 20 feet for all sizes.

PIPE

All pipes shall be suitable for use as pressure conduit. Provisions must be made for expansion and contraction at each joint with an elastomeric gasket. The bell shall consist of an integral wall section with a factory installed, solid cross section Rieber or other elastomeric gasket, which meets the requirements of ASTM F477. The bell section shall be designed to be at least as hydrostatically strong as the pipe barrel and meet the requirements of AWWA C900. The joint design shall meet the requirements of ASTM D3139 under both pressure and 22 in. Hg vacuum. Sized and dimensions shall be as shown in this specification.

QUICK BURST TEST

Randomly selected samples testing in accordance with AWWA C900 and UL 1285 shall withstand, without failure, the pressures listed below when applied for 60-70 seconds.

DR	PRESSURE CLASS (psi)		MINIMUM BURST PRESSURE AT 73 F (psi)
	AWWA C900-97/FM 1612	AWWA C900-07	
25	100	165	535
18	150	235	755
14	200	305	985

DROP IMPACT TEST

Pipe shall withstand, without failure using Tup "B" and Flat Rate Holder "B", at 73 F, a tup impact energy of 100 ft-lbf for all Pressure Class of 4"-12" trade sizes. There shall be no visible evidence of shattering or splitting when the energy is imposed.

AWWA C905 PVC PLASTIC WATER PIPE SPECIFICATIONS

SCOPE

This specification designates general requirements for 14" through 48" un-plasticized polyvinyl chloride (PVC) plastic water pipe with integral bell and spigot joints for the conveyance of water and other fluids. This pipe shall meet AWWA C905 ANSI/NSF-61 and ANSI/UL 1285 (14" – 24").

MATERIALS

Pipe shall meet the requirements of AWWA Standard C905 "Polyvinyl Chloride (PVC) Water Transmission Pipe." All pipes shall be made from quality PVC resin, compounded to provide physical and mechanical properties that equal or exceed cell class 12454 as defined in ASTM D1784.

STANDARD LAYING LENGTHS

Standard laying lengths are 20 feet for all sizes.

PIPE

All pipes shall be suitable for use as pressure conduit. Provisions must be made for expansion and contraction at each joint with an elastomeric gasket. The bell shall consist of an integral wall section with a factory installed, solid cross section Rieber/other elastomeric gasket, which meets the requirements of ASTM F477. The bell section shall be designed to be at least as hydrostatically strong as the pipe barrel and meet the requirement of AWWA C905. The joint designs shall meet requirements of ASTM D3139, under both pressure and 22 in. Hg vacuum. Sizes and dimensions shall be as shown in this specification.

QUICK BURST TEST

Randomly selected samples tested in accordance with ANSI/UL 1285 shall withstand, without failure, the pressures listed below when applied for 60-70 seconds.

DR	PRESSURE RATING (psi)	MINIMUM BURST
18	235	755
25	165	535
32.5	125	400
41	100	315
51	80	255

FLATTENING TEST

Specimens of pipe, a minimum of 6 in. (150 mm) long, shall be flattened between parallel plates in a suitable press until the distance between the plates is 40 percent of OD of the pipe. The rate of flattening shall be uniform and such that the compression is completed within 2 to 5 minutes. There shall be no evidence of splitting, cracking or breaking.

SDR 26 AND SDR 35 GASKETED GRAVITY SANITARY SEWER PIPE

PVC gravity sewer pipe shall be made from a compound conforming to a cell classification of 12454 or 12364 as defined by ASTM D1784 and in accordance with ASTM D3034 for sizes four inch through fifteen inch. The wall thickness, when tested according to ASTM D3412, shall correspond to a dimension ratio of SDR 35 with a pipe stiffness value of 46 or SDR 26 with a pipe stiffness of 115 for heavy wall pipe. Integral bells shall incorporate locked in gaskets meeting the requirements of ASTM D3212 and F477. The pipe shall be provided in lengths of 14 feet or 20 feet as required.

ASTM D3034 GASKETED GRAVITY SEWER PIPE

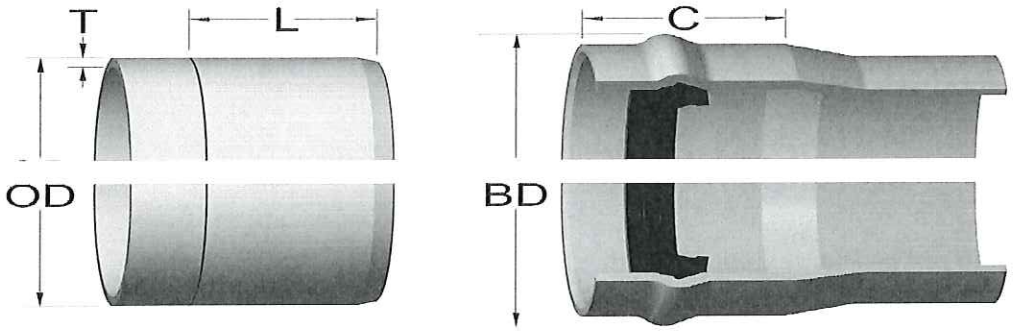

NOMINAL PIPE SIZE	OUTISDE DIA. – NOM. (OD)	*APPROX. BELL DIA. (BD)	**APPROX. BELL DEPTH (C)	INSERT MARK (L)
4"	4.215	5.25	3.75	3.13
6"	6.275	7.50	4.63	4.00
8"	8.400	10.00	5.25	4.13
10"	10.500	12.25	5.88	5.13
12"	12.500	14.25	6.50	5.38
15"	15.300	17.25	7.75	7.38

NOMINAL PIPE SIZE	SDR 35 (T)	SDR 26 (T)
4"	.120	.162
6"	.180	.241
8"	.240	.323
10"	.300	.404
12"	.360	.481
15"	.437	.588

HIGH PERFORMANCE (HP) POLYPROPYLENE STORM PIPE

1.0 SCOPE:

This specification includes materials and test methods for 12 to 60 inch diameter HP Polypropylene Pipe. The requirements of this specification are intended to provide pipe and fittings suitable for underground use in gravity-flow applications such as storm sewers, drainage and under-drains.

2.0 PIPE:

12 to 30 inch HP Polypropylene Pipe shall have a smooth interior and annular exterior corrugation and are required to meet or exceed ASTM F2736 and AASHTO M330. 36 to 60 inch pipe shall have a smooth interior and annular exterior corrugations and are required to meet or exceed ASTM F2881 and AASHTO M330. Pipe and fittings shall be homogeneous throughout and free from visible cracks, holes, foreign inclusions or other injurious defects.

3.0 FITTINGS:
Fittings shall conform to ASTM F2736, ASTM F2881 and AASHTO M330, for the respective diameters. Bell & spigot connections shall utilize a spun-on, welded or integral bell and spigot with gaskets meeting ASTM F477. Bell & spigot fittings joint shall meet the watertight joint performance requirements of ASTM D3212. Corrugated couplings shall be split collar, engaging at least 2 full corrugations.

4.0 JOINTS:
HP Polypropylene Pipe shall be joined with a gasketed integral bell & spigot joint meeting the requirements of ASTM F2736 or F2881, for the respective diameters.

HP Polypropylene Pipe shall be watertight according to the requirements of ASTM D3212. Spigots shall have gaskets meeting the requirements of ASTM F477. Gasket shall be installed by the pipe manufacturer and covered with a removable, protective wrap to ensure the gasket is free from debris. A joint lubricant available from the manufacturer shall be used on the gasket and bell during assembly.

HP Polypropylene Pipe shall have a reinforced bell with a polymer composite band installed by the manufacturer.

5.0 MATERIAL PROPERTIES:
Polypropylene compound for pipe and fitting production shall be impact modified copolymer meeting the material requirements of ASTM F2736, Section 4, ASTM F2881, Section 5 and AASHTO M330, Section 6.1, for the respective diameters.

6.0 INSTALLATION:
Installation shall be in accordance with ASTM D2321, manufacturers recommended installation guidelines and plan specifications.

7.0 PIPE DIMENSIONS:

Nominal Pipe I.D. in (mm)	12 (300)	15 (375)	18 (450)	24 (600)	30 (750)	36 (900)	42 (1050)	48 (1200)	60 (1500)
Average Pipe I.D. In (mm)	12.1 (307)	14.9 (378)	18.0 (457)	24.1 (612)	30.1 (765)	35.7 (907)	41.8 (1062)	47.3 (1201)	59.3 (1506)
Average Pipe O.D. in (mm)	14.5 (368)	17.6 (447)	21.2 (538)	28.0 (711)	35.4 (899)	41.1 (1044)	47.2 (1199)	53.8 (1367)	66.5 (1689)
Minimum Pipe Stiffness * @ 5% Deflection* #/in./in. (kN/m^2)	75 (520)	60 (411)	56 (385)	50 (343)	46 (320)	40 (275)	35 (240)	35 (240)	30 (205)

HIGH DENSITY POLYETHYLENE PIPE (HDPE)

SCOPE:
This specification describes 4- through 60 inch (100 to 1500 mm) HDPE pipe (per ASTM F2648) for use in gravity-flow land drainage applications.

PIPE Requirements:
HDPE pipe (per ASTM F2648) shall have smooth interior and annular exterior corrugations.

- 4-through 60 inch (100 to 1500 mm) shall meet ASTM F2648
- Manning's "n" value for use in design shall be 0.012

Joint Performance:
Pipe shall be joined using a bell & spigot joint meeting ASTM F2648. The joint shall be soil-tight and gaskets, when applicable, shall meet the requirements of ASTM F477. Gaskets shall be installed by the pipe manufacturer and covered with a removable wrap to ensure the gasket is free from debris. A joint lubricant supplied by the manufacturer shall be used on the gasket and bell during assembly.

Fittings:
Fittings shall conform to ASTM F 2306. Bell and spigot connections shall utilize a spun-on or welded bell and valley or saddle gasket meeting the soil-tight joint performance requirements of ASTM F 2306.

Material Properties
Material for pipe production shall be an engineered compound of virgin and recycled high density polyethylene conforming with the minimum requirements of cell classification 424420C (ESCR Test Condition B) for 4-through 10 inch (100 to 250 mm) diameters, and 435420C (ESCR Test Condition B) for 12 through 60 inch (300 to 1500 mm) diameters, as defined and described in the latest version of ASTM D3350, except that carbon black content should not exceed 4%. The design engineer shall verify compatibility with overall system including structural, hydraulic, material and installation requirements for a given application.

Installation
Installation shall be in accordance with ASTM D2321 and manufacturers published installation guidelines, with the exception that minimum cover in trafficked areas for 4-through 48 inch (100 to 1200 mm) diameters shall be one foot. (0.3 m) and for 60 inch (1500 mm) diameters, the minimum cover shall be 2 ft. (0.6 mm) in single run applications. Backfill for minimum fill heights depend on embedment material and compaction level; please refer to manufactures guide lines.

Pipe I.D In mm	4 (100)	6 (150)	8 (200)	10 (250)	12 (300)	15 (375)	18 (450)	24 (600)	30 (750)	36 (900)	42 (1050)	48 (1200)	60 (1500)
Pipe O.D. * In mm	4.8 (122)	6.9 (175)	9.1 (231)	11.4 (290)	14.5 (368)	18 (457)	22 (559)	28 (711)	36 (914)	42 (1067)	48 (1219)	54 (1372)	67 (1702)
Perforations	All diameters availability with or without perforation												

*Pipe O.D. values ar provided for reference purposes only. Values stated for 12 through 60 inch are +/- 1 inch.

TERMS & CONDITIONS:

1. The contract term will be for a period of one (1) year period with Hidalgo County's option to extend the contract for an additional one (1) year under the same rates, terms and conditions.

2. Hidalgo County reserves the right to continue this bid for an additional sixty (60) day grace period at the end of the contract term for unforeseen delay in award of new bid for next contract.

3. Hidalgo County reserves the right to hold the bids received for a period of ninety (90) days without taking action hereon.

4. Hidalgo County may award the bid on a lump sum basis to one (1) bidder or to multiple bidders on an item by item basis in each category, whichever is in the best interest of the County. For evaluation and consideration of items bid, samples will be submitted upon request. Categories will be as follows.

5. Hidalgo County reserves the right to reject any/all bids, to waive any/all formalities or Technicalities, or to accept the bid considered the best and most advantageous to the County.

6. After bid is awarded and low bidder(s) default(s) in meeting the general instructions to bidders and/or comply with contractual agreement, Hidalgo County reserves the right to seek services from the next low bidder(s). In such event, County shall charge the successful bidder(s) the difference for any additional cost of such item(s).

7. Any contract awarded to a successful bidder will be in effect until:
   (a) The contract expires,
   (b) Delivery and acceptance of products and/or performance of service ordered,
   (c) Terminated by County with thirty (30) days written notice prior to cancellation.

8. It is understood and agreed that in case Hidalgo County should need "any items listed" and it is not available within the time frame needed from the successful Bidder during the term of this contract, Hidalgo County reserves the right to purchase these items from other sources other than the successful Bidder and shall not be in violation of any terms or conditions of said contract.

9. After Bid is awarded and successful awarded contractor(s) default(s) in meeting the general instructions to bidder(s) and/or compiling with Bid agreement, Hidalgo County reserves the right to seek services from the next low bidder. In such event, County shall charge the successful bidder the difference for any additional cost to such item.

10. Hidalgo County reserves the right to seek purchases from State awarded vendors or any other Cooperative Purchasing programs, whenever it is in the best interest of the County to do so.

11. Insurance requirements for this project to be maintained throughout the contract term (Refer to limits on the Exhibit "C" for limits); insurance certificate must be submitted to the Purchasing Department prior to any services being performed by the awarded bidder.

12. The bidder(s) awarded the contract **cannot** engage the services of a **subcontractor without prior written consent of Hidalgo County** to perform services hereunder. The successful bidder(s) must present evidence that the proposed subcontractor possess all the necessary licenses and permits to perform the services and that subcontractor has obtained the required insurance.

13. Bidder(s) agree that to the extent an item(s) in unavailable for Bidder's own inventory, Bidder(s) will be responsible for locating an alternative supplier and for providing the product or service to Hidalgo County.

14. Unit prices quoted shall remain firm for the period of the contract and shall include the cost of shipping and delivery of all items to the designated FOB point and must include any and all cost in the delivered unit price.

All costs and expenses associated with the preparation and submission of proposals shall be the responsibility of the submitter and no reimbursements for such charges or expenses shall be passed onto the County.

Market Volatility and Unit Price Adjustments:
Hidalgo County recognizes that during periods of national crisis and unstable economic conditions, unforeseen price increases might affect costs for goods and services contracted on an annual basis. The following procedure may be employed to mediate price volatility:

- **Requesting Price Adjustment**: Upon written request of the Vendor to the County Purchasing Agent, the County may review evidence of prevailing industry-wide market conditions that warrant an adjustment in bid prices contained in the contract.
- A Vendor must tie any price change clause to an industry-wide or otherwise nationally recognized index, or some other form of verifiable document. Such written request must be accompanied by a certified copy of the supplier's advisory or notification to the vendor of the price changes.
- The Vendor must put the Purchasing Agent on the mailing lists for such publications so that the Purchasing Agent can monitor said changes. Such membership shall be at no cost to the County.
- The County Purchasing Agent retains the right to determine whether or not such proposed price changes are in the best interest of the County.
- No price escalation will be authorized in excess of the amount of the increase referred to in the supplier's notice.
- The County may only grant a price increase if the evidence presented is deemed reliable. Should the County allow a price increase, the approved price change shall be honored for all orders received by the vendor or contractor after the effective date of such price change. Approved price changes are not applicable to orders already issued and in process at time of price change.
- **Price Reduction**: Vendor shall notify the County at the time when the Vendor's costs for items and/or supplies reduce due to stabilization in the market at which time prices for items on this contract shall be reduced accordingly. Failure by the Vendor to notify the County of a decrease in costs for items and/or supplies for which the Vendor was granted a price adjustment, may result in immediate termination of this contract and the County shall not be obligated to pay the Vendor the difference between the contract price and the price adjustment.

- **Time Frame for Adjusted Price Increases:** Price increases are only valid for the quarter in which they are requested and approved. Prices shall return to the original contract price at the beginning of the following quarter unless a Vendor notifies the County in writing within ten (10) days of expiration of the quarter in which the price increase is in effect, that it desires to have the price increase continue or that the Vendor is requesting a different price increase for the following quarter. Such request must be supplemented with sufficient justification to demonstrate that the price increase remains necessary. The County Purchasing Department shall have sole discretion whether to grant the price increase extension. The County too, shall have discretion to unilaterally reduce, eliminate or extend a price adjustment to the Vendor at any time upon written notice from the County to the Vendor demonstrating justification for such reduction, elimination or extension of the price adjustment.

- **Allowable Review Periods**: Price adjustment reviews may only be requested by the Vendor on a quarterly basis. However, the County may at its own discretion, conduct temporary price adjustment reviews at any time. The County Purchasing Agent and/or the County Auditor reserve the right to audit and/or examine any pertinent books, documents, papers, records or invoices relating directly to the contract transaction in question after reasonable notice and during normal business hours.

- **Dollar Limit to Price Changes**: The total increase in contract price shall not exceed twenty-five percent (25%) of the original contract price during the contract term.

ADDITIONAL INFORMATION

Hidalgo County is requesting that any and all questions, inquiries, and clarifications regarding quotes, bids, proposals, or statements of qualifications be addressed to, Martha L. Salazar, CPPB, Purchasing Agent, 2812 S. Business Hwy. 281, Edinburg, Texas 78539. **TELEPHONE INQUIRIES WILL NOT BE ACCEPTED.**

All written inquiries will be accepted via facsimile (956) 292-7612 or via e-mail to matilde.faz@co.hidalgo.tx.us by no later than, Monday, March 27, 2017 by 5:00 p.m. Responses to said inquiries will be sent to all applicants via-email by no later than Wednesday, March 29, 2017 by 5:00 p.m.

EXHIBIT "B"

BID PAGE

REQUEST FOR BIDS

Hidalgo County

(All funding sources, programs & entities)

"Pipes & Related Miscellaneous Items"

RFB No.: 2017-046-04-05-FAZ

CATEGORY (A) – PIPES

CORRUGATED POLYVINYL CHLORIDE (PVC) STORM SEWER PIPE **NIGP CODE: 665-89** Polyvinyl Chloride (PVC)		
DESCRIPTION	PRICE	
12"		LF
15"		LF
18"		LF
24"		LF
30"		LF
36"		LF
42"		LF
48"		LF

CORRUGATED STEEL STORM SEWER PIPE **NIGP CODE: 210-29** Corrugated Galvanized Metal Pipe **(UNIT PRICE INCLUDES ONE GASKETED BAND CONNECTION FOR EVERY 20 FOOT JOINT)**				
DIAMETER	TYPE "IR"PIPE PRICE	TYPE "I" PIPE PRICE	TYPE "IA" PIPE PRICE	
12"				LF
15"				LF
18"				LF
24"				LF
30"				LF
36"				LF
42"				LF
48"				LF
54"				LF
60"				LF
66"				LF
72"				LF
78"				LF
84"				LF
90"				LF
96"				LF
102"				LF
108"				LF
114"				LF
120"				LF
126"				LF
132"				LF
138"				LF
144"				LF

REINFORCED CONCRETE PIPE – RUBBER GASKET JOINT PIPE NIGP CODE: 658-68						
DESCRIPTION	CLASS III PRICE		CLASS IV PRICE		CLASS V PRICE	
12"		LF		LF		LF
15"		LF		LF		LF
18"		LF		LF		LF
24"		LF		LF		LF
30"		LF		LF		LF
36"		LF		LF		LF
42"		LF		LF		LF
48"		LF		LF		LF
54"		LF		LF		LF
60"		LF		LF		LF
72"		LF		LF		LF

REINFORCED CONCRETE PIPE – TONGUE & GROOVE PIPE NIGP CODE: 658-68						
DESCRIPTION	CLASS III PRICE		CLASS IV PRICE		CLASS V PRICE	
12"		LF		LF		LF
15"		LF		LF		LF
18"		LF		LF		LF
24"		LF		LF		LF
30"		LF		LF		LF
36"		LF		LF		LF
42"		LF		LF		LF
48"		LF		LF		LF
54"		LF		LF		LF
60"		LF		LF		LF
72"		LF		LF		LF

REINFORCED POLYTHYLENE PIPE – 20 FOOT JOINTS NIGP CODE: 658-58		
DESCRIPTION	PRICE	
24"		LF
30"		LF
36"		LF
42"		LF
48"		LF
54"		LF
60"		LF
72"		LF
84"		LF
96"		LF

AWWA C900 PVC PLASTIC PRESSURE PIPE NIGP CODE: 658-56 PLASTIC PIPES OR NIGP CODE: 658-60 PVC PIPES						
DESCRIPTION	DR 14 PRICE		DR 18 PRICE		DR 25 PRICE	
4"		LF		LF		LF
6"		LF		LF		LF
8"		LF		LF		LF
10"		LF		LF		LF
12"		LF		LF		LF

AWWA C905 PVC PLASTIC WATER PIPE NIGP CODE: 658-56 PLASTIC PIPES OR NIGP CODE: 658-60 PVC PIPES									
DESCRIPTION	DR 18 PRICE		DR 25 PRICE		DR 32.5 PRICE		DR 41 PRICE		DR 51 PRICE	
14"		LF		LF		LF		LF		LF
16"		LF		LF		LF		LF		LF
18"		LF		LF		LF		LF		LF
24"		LF		LF		LF		LF		LF
30"		LF		LF		LF		LF		LF
36"		LF		LF		LF		LF		LF
42"		LF		LF		LF		LF		LF
48"		LF		LF		LF		LF		LF

SDR 26 AND SDR 35 GASKETED GRAVITY SANITARY SEWER PIPE NIGP CODE: 210-35 SEWER PIPE JOINT SEALING COMPOUND				
SIZE OF PIPE	SDR 26		SDR 35	
4"		LF		LF
6"		LF		LF
8"		LF		LF
10"		LF		LF
12"		LF		LF
15"		LF		LF

HIGH PERFORMANCE (HP) POLYPROPYLENE STORM PIPE		
DESCRIPTION	PRICE	
12"		LF
15"		LF
18"		LF
24"		LF
30"		LF
36"		LF
42"		LF
48"		LF
60"		LF

HIGH DESTINY POLYETHYLENE PIPE (HDPE) NIGP CODE: 658-58 Polyethylene Pipe And Fitting		
DESCRIPTION	PRICE	
4"		LF
6"		LF
8"		LF
10"		LF
12"		LF
15"		LF
18"		LF
24"		LF
30"		LF
36"		LF
42"		LF
48"		LF
54"		LF
60"		LF

PLUMBING PIPES – 20 FOOT SECTIONS NIGP CODE: 967-60	
PVC	PRICE
½"	
1 ½"	
2"	
3"	
4"	

PLUMBING PIPES – 20 FOOT SECTIONS NIGP CODE: 967-60	
COPPER	PRICE
½"	
¾"	

CATEGORY (B) – INLETS

NIGP CODE: 210-31

INLETS, AREA, SEWER DRAIN, PRECAST, CONCRETE, STORM DRAIN, **NO BOTTOM FLOORS**

DESCRIPTION	PRICE																
	2'	2 ½'	3'	3 ½'	4'	4 ½'	5'	5 ½'	6'	6 ½'	7'	7 ½'	8'	8 ½'	9'	9 ½'	10'
Type "A" Inlet (5' x 3')																	
Type "A-1" Inlet (5' x 4')																	
Type "A-2" Inlet (5' x 5')																	
Type "A-3" Inlet (5' x 6')																	
Type "A" (SPL-1) Inlet (5' x 3')																	
Type "A-1" (SPL-1) Inlet (5' x 4')																	
Type "A-2" (SPL-1) Inlet (5' x 5')																	
Type "A-3" (SPL-1) Inlet (5' x 6')																	
TYPE "C" INLET 2' X 2'																	
TYPE "C" INLET 3' X 3'																	
TYPE "C" INLET 4' X 4'																	
TYPE "CC" INLET 5' x 3'																	

Type "F" Inlet (W=3')																
Type "F-1" Inlet (W=4')																
Type "F-2" Inlet (W=5')																
Type "F-3" Inlet (W=6')																
Type "F" (SPL-1) Inlet (W=3')																
Type "F-1" (SPL-1) Inlet (W=4')																
Type "F-2" (SPL-1) Inlet (W=5')																
Type "F-3" (SPL-1) Inlet (W=6')																

CATEGORY (C) – MANHOLES, NO BOTTOM FLOORS

NIGP CODE: 890-30

MANHOLES

DESCRIPTION	PRICE														
	3'	3 ½'	4'	4 ½'	5'	5 ½'	6'	6 ½'	7'	7 ½'	8'	8 ½'	9'	9 ½'	10'
TYPE "A" MANHOLE															
TYPE "A-1" MANHOLE															
TYPE "M" MANHOLE															

CATEGORY (D) – MISCELLANEOUS

DESCRIPTION		
WATER VALVE	UNIT	PRICE
2"	EA	
4"	EA	
6"	EA	
8"	EA	
10"	EA	
90 DEGREE ELBOW		
2"	EA	
4"	EA	
6"	EA	
8"	EA	
10"	EA	
45 DEGREE ELBOW		
2"	EA	
4"	EA	
6"	EA	
8"	EA	
10"	EA	
STEEL PIPE CASING WITH SPACERS		
4"	LF	
6"	LF	
12"	LF	
16"	LF	
24"	LF	
FIRE HYDRANT W/VALVE	EA	
PVC SCHEDULE 40 WATER LINE DR 18		
2"	LF	
8"	LF	
PVC SCHEDULE 40		
1.5"	LF	
0.75"	LF	
0.5"	LF	
WATER SADDLE W/2' CORPORATE VALVE		
8" x 2"	EA	

HP Dual Wall Marmac Couplers		
PIPE SIZE	**PRICE**	**UNIT**
12"		EA
15"		EA
18"		EA
24"		EA
30"		EA
36"		EA
42"		EA
48"		EA
60"		EA

HP Dual Wall Fabricated Tees		
PIPE SIZE	**PRICE**	**UNIT**
12"		EA
15"		EA
18"		EA
24"		EA
30"		EA
36"		EA
42"		EA
48"		EA
60"		EA

HP Dual Wall Fabricated Bends						
PIPE SIZE	**11.25 Bend**	**22.5 Bend**	**30* Bend**	**45* Bend**	**90* Bend**	**Unit**
12"						EA
15"						EA
18"						EA
24"						EA
30"						EA
36"						EA
42"						EA
48"						EA
60"						EA

EXHIBIT "B" – BID PAGE
Hidalgo County (All funding sources, programs & entities)
"PIPES & Related Miscellaneous Items"
RFB No.: 2017-046-04-05-FAZ

BIDDER/COMPANY NAME:_____

ADDRESS: _____

CITY: _____ **STATE:** _____ **ZIPCODE:**_____

PHONE No:_____ **FAX No:** _____ **CELL №**_____

AUTHORIZED SIGNATURE:_____

PRINTED NAME: _____

TITLE: _____ **DATE:**_____

EMAIL:_____

EXHIBIT "C"

INSURANCE REQUIREMENTS

REQUEST FOR BIDS

Hidalgo County

(All funding sources, programs & entities)

"Pipes & Related Miscellaneous Items"

RFB No.: 2017-046-04-05-FAZ

EXHIBIT "C"

Insurance Requirements
Applicable to the Acquisition of Goods and /or Services
(other than Professional Services)

The Bidder awarded the contract shall furnish proof of insurance, which will also include any subcontractor that is subcontracted by the bidder in at least the following limits, to be in place prior to providing any services under this Contract and to continue at all times in force in effect during the term of this Contract:

1. A Five Hundred Thousand Dollar ($500,000.00) Comprehensive General Liability insurance policy providing additional coverage to all underlying liabilities of County.

2. Automobile liability insurance policy with limits of at least Three Hundred Thousand Dollars ($300,000.00) per person and Five Hundred Thousand Dollars ($500,000.00) per occurrence. Coverage should include injury to or death of persons and property damage claims with limits up to Five Hundred Thousand ($500,000.00) arising out of the services provided to County hereunder.

3. Uninsured/Underinsured motorist coverage in an amount equal to the bodily injury limits set forth immediately above;

4. Workers compensation insurance in amounts established by Texas law, unless the Bidder is specifically exempted from the Texas Workers Compensation Act, Texas Labor Code Chapter 401, et. seq.

Hidalgo County will only accept certificates of insurance on an Acord form (as attached hereto). Certificates of insurance naming County as an **additional insured** shall be submitted to County for approval prior to any services being performed by Contractor. Each policy of insurance required hereunder shall extend for a period equivalent to, or longer than the term of the Contract, and any insurer hereunder shall be required to give at least thirty (30) days written notice to the County prior to the cancellation of any such coverage on the termination date, or otherwise. This Contract shall be automatically suspended upon the cancellation, or other termination, of any required policy of insurance hereunder, and such suspension shall continue until evidence adequate replacement coverage is provided to County. If replacement coverage is not provided within thirty (30) days following suspension of the Contract, this Contract shall automatically terminate.

ACORD CERTIFICATE OF INSURANCE

DATE (MM/DD/YY)

PRODUCER	THIS CERTIFICATE IS ISSUED AS A MATTER OF INFORMATION ONLY AND CONFERS NO RIGHTS UPON THE CERTIFICATE HOLDER. THIS CERTIFICATE DOES NOT AMEND, EXTEND OR ALTER THE COVERAGE AFFORDED BY THE POLICIES BELOW.
	INSURERS AFFORDING COVERAGE
INSURED	INSURER A:
	INSURER B:
	INSURER C:
	INSURER D:
	INSURER E:

COVERAGES

THE POLICIES OF INSURANCE LISTED BELOW HAVE BEEN ISSUED TO THE INSURED NAMED ABOVE FOR THE POLICY PERIOD INDICATED. NOTWITHSTANDING ANY REQUIREMENT, TERM OR CONDITION OF ANY CONTRACT OR OTHER DOCUMENT WITH RESPECT TO WHICH THIS CERTIFICATE MAY BE ISSUED OR MAY PERTAIN, THE INSURANCE AFFORDED BY THE POLICIES DESCRIBED HEREIN IS SUBJECT TO ALL THER TERMS, EXCLUSIONS AND CONDITIONS OF SUCH POLICIES. AGGREGATE LIMITS SHOWN MAY HAVE BEEN REDUCED BY PAID CLAIMS.

INSR LTR	TYPE OF INSURANCE	POLICY NUMBER	POLICY EFFECTIVE DATE (MM/DD/YY)	POLICY EXPIRATION DATE (MM/DD/YY)	LIMITS	
A	**GENERAL LIABILITY** ☐ COMMERCIAL GENERAL LIABILITY ☐☐ CLAIMS MADE OCCUR ☐ OWNER'S & CONT. PROT ☐ OWNER'S PROTECTIVE LIABILITY GEN'L AGGREGATE LIMIT APPLIES PER: ☐ POLICY PROJECT ☐ LOC				EACH OCCURRENCE FIRE DAMAGE (Any one fire) MED (Any one person) PERS & ADV INJURY AL AGGREGATE ODUCTS – COMP/OP GG	$ $ $ $ $ $
B	**AUTOMOBILE LIABILITY** ☐ ANY AUTO ☐ ALL OWNED AUTOS ☐ SCHEDULED AUTOS ☐ HIRED AUTOS ☐ NON-OWNED AUTOS				COMBINED SINGLE LIMIT (Ea accident) BODILY INJURY (Per person) BODILY INJURY (Per accident) PROPERTY DAMAGE (Per accident)	$ $ $ $
	GARAGE LIABILITY ☐ ANY AUTO				AUTO ONLY-EA ACCIDENT OTHER THAN AUTO ONLY EA ACC AGG	$ $ $
C	**EXCESS LIABILITY** ☐ OCCUR ☐ CLAIM DE ☐ DEDUCTIBLE ☐ RETENTION $				EACH OCCURENCE AGGREGATE	$ $ $ $ $
D	**WORKERS COMPENSATION AND EMPLOYER'S LIABILIT**				WC STATU- ☐ OTHER TORY LIMITS E.L. EACH ACCIDENT E.L. DISEASE-EA EMPLOYEE E.L. DISEASE-POLICY LIMIT	$ $ $
	OTHER					

DESCRIPTION OF OPERATIONS / LOCATION / VEHICLES / EXCLUSIONS ADDED BY ENDORSEMENT / SPECIAL PROVISIONS

County of Hidalgo shall be named as additional insured on all Commercial General Liability policies.

CERTIFICATE HOLDER	ADDITIONAL INSURED; INSURER LETTER: _____ CANCELLATION
Hidalgo County **Attn: Purchasing Department** **2812 S Highway Bus. 281** **Edinburg, Texas 78539**	SHOULD ANY OF THE ABOVE DESCRIBED POLICIES BY CANCELLED BEFORE THE EXPIRATION DATE THEREOF, THE ISSUING INSURER WILL ENDEAVOR TO MAIL ***30*** DAYS WRITTEN NOTICE TO THE CERTIFICATE HOLDER NAMED TO THE LEFT, BUT FAILURE TO DO SO SHALL IMPOSE NO OBLIGATION OR LIABILITY OF ANY KIND UPON THE INSURER, ITS AGENTS OR REPRESENTATIVES. AUTHORIZED REPRESENTATIVE

SAMPLE

Insurance Requirement Acknowledgment

I, _____, authorized representative for _____,
Company/Vendor

hereby acknowledge receipt of the County's required insurance limits. Said requirements:

- will be acquired within 10 working days after notification from Purchasing Department of bid awarded by the Hidalgo County Commissioners' Court;
- will acquire additional amounts required to meet the County's requirements within 10 working days after notification from Purchasing Department of bid award by the Hidalgo County Commissioners' Court; currently carry the following:

  Automobile Liability: $_____ General Liability: $_____
- have already been met, see attached copy of insurance certificate.

_____ _____.
Authorized Representative Date

Notice to Bidder:
A certificate of insurance for the required insurance limits shall be provided to the Purchasing Department's Contract Managers in order to qualify for award of bid and to execute a contract between your Company and the County

Failure to provide Certificates of Insurance to the Purchasing Department's Contract Managers will cause the bid award to be rescinded and re-awarded to next lowest bidder. Certificates of Insurance will be monitored and verified on a **quarterly basis** to ensure coverage policy is in place. It is the Company's obligation to maintain the appropriate insurance coverage throughout the term of the contract.

THIS FORM MUST ACCOMPANY BID PACKET

PROJECT REQUIREMENTS ACKNOWLEDGMENT

This is to certify that I, _____, possess all of the APPLICABLE:

1. Licenses: _____.
2. Bond (if applicable)_____
3. Certificates: _____.
4. Permits: _____.
5. Other: _____.

necessary to carry out the required project. Furthermore, I am providing copies of the required documentation so that, if my company is awarded this bid, I may be eligible to enter into a contract with Hidalgo County and proceed to complete the project in a timely manner.

* Any licenses, bonds (if applicable),certificates, permits, etc. which are required must be presented as part of the bid packet in order to expedite the bid evaluation process.

_____ _____.
Authorized Signature Date

_____.
Company

_____.
Address

_____.
City, State, Zip

THIS FORM MUST ACCOMPANY BID PACKET

EXHIBIT "D"

CIQ FORM
CONFLICT OF INTEREST QUESTIONNAIRE

REQUEST FOR BIDS

Hidalgo County

(All funding sources, programs & entities)

"Pipes & Related Miscellaneous Items"

RFB No.: 2017-046-04-05-FAZ

CONFLICT OF INTEREST QUESTIONNAIRE

FORM CIQ

For vendor doing business with local governmental entity

This questionnaire reflects changes made to the law by H.B. 23, 84th Leg., Regular Session.

This questionnaire is being filed in accordance with Chapter 176, Local Government Code, by a vendor who has a business relationship as defined by Section 176.001(1-a) with a local governmental entity and the vendor meets requirements under Section 176.006(a).

By law this questionnaire must be filed with the records administrator of the local governmental entity not later than the 7th business day after the date the vendor becomes aware of facts that require the statement to be filed. *See* Section 176.006(a-1), Local Government Code.

A vendor commits an offense if the vendor knowingly violates Section 176.006, Local Government Code. An offense under this section is a misdemeanor.

OFFICE USE ONLY

Date Received

1 **Name of vendor who has a business relationship with local governmental entity.**

2 ☐ **Check this box if you are filing an update to a previously filed questionnaire.** (The law requires that you file an updated completed questionnaire with the appropriate filing authority not later than the 7th business day after the date on which you became aware that the originally filed questionnaire was incomplete or inaccurate.)

3 **Name of local government officer about whom the information is being disclosed.**

_____

Name of Officer

4 **Describe each employment or other business relationship with the local government officer, or a family member of the officer, as described by Section 176.003(a)(2)(A). Also describe any family relationship with the local government officer. Complete subparts A and B for each employment or business relationship described. Attach additional pages to this Form CIQ as necessary.**

A. Is the local government officer or a family member of the officer receiving or likely to receive taxable income, other than investment income, from the vendor?

☐ Yes ☐ No

B. Is the vendor receiving or likely to receive taxable income, other than investment income, from or at the direction of the local government officer or a family member of the officer AND the taxable income is not received from the local governmental entity?

☐ Yes ☐ No

5 **Describe each employment or business relationship that the vendor named in Section 1 maintains with a corporation or other business entity with respect to which the local government officer serves as an officer or director, or holds an ownership interest of one percent or more.**

6 ☐ Check this box if the vendor has given the local government officer or a family member of the officer one or more gifts as described in Section 176.003(a)(2)(B), excluding gifts described in Section 176.003(a-1).

7

_____ _____

Signature of vendor doing business with the governmental entity Date

CONFLICT OF INTEREST QUESTIONNAIRE
For vendor doing business with local governmental entity

A complete copy of Chapter 176 of the Local Government Code may be found at http://www.statutes.legis.state.tx.us/Docs/LG/htm/LG.176.htm. For easy reference, below are some of the sections cited on this form.

Local Government Code § 176.001(1-a): "Business relationship" means a connection between two or more parties based on commercial activity of one of the parties. The term does not include a connection based on:

(A) a transaction that is subject to rate or fee regulation by a federal, state, or local governmental entity or an agency of a federal, state, or local governmental entity;

(B) a transaction conducted at a price and subject to terms available to the public; or

(C) a purchase or lease of goods or services from a person that is chartered by a state or federal agency and that is subject to regular examination by, and reporting to, that agency.

Local Government Code § 176.003(a)(2)(A) and (B):

(a) A local government officer shall file a conflicts disclosure statement with respect to a vendor if:

***

(2) the vendor:

(A) has an employment or other business relationship with the local government officer or a family member of the officer that results in the officer or family member receiving taxable income, other than investment income, that exceeds $2,500 during the 12-month period preceding the date that the officer becomes aware that

(i) a contract between the local governmental entity and vendor has been executed; or

(ii) the local governmental entity is considering entering into a contract with the vendor;

(B) has given to the local government officer or a family member of the officer one or more gifts that have an aggregate value of more than $100 in the 12-month period preceding the date the officer becomes aware that:

(i) a contract between the local governmental entity and vendor has been executed; or

(ii) the local governmental entity is considering entering into a contract with the vendor.

Local Government Code § 176.006(a) and (a-1)

(a) A vendor shall file a completed conflict of interest questionnaire if the vendor has a business relationship with a local governmental entity and:

(1) has an employment or other business relationship with a local government officer of that local governmental entity, or a family member of the officer, described by Section 176.003(a)(2)(A);

(2) has given a local government officer of that local governmental entity, or a family member of the officer, one or more gifts with the aggregate value specified by Section 176.003(a)(2)(B), excluding any gift described by Section 176.003(a-1); or

(3) has a family relationship with a local government officer of that local governmental entity.

(a-1) The completed conflict of interest questionnaire must be filed with the appropriate records administrator not later than the seventh business day after the later of:

(1) the date that the vendor:

(A) begins discussions or negotiations to enter into a contract with the local governmental entity; or

(B) submits to the local governmental entity an application, response to a request for proposals or bids, correspondence, or another writing related to a potential contract with the local governmental entity; or

(2) the date the vendor becomes aware:

(A) of an employment or other business relationship with a local government officer, or a family member of the officer, described by Subsection (a);

(B) that the vendor has given one or more gifts described by Subsection (a); or

(C) of a family relationship with a local government officer.

VENDOR'S APPLICATION & W-9 FORM

REQUEST FOR BIDS

Hidalgo County

(All funding sources, programs & entities)

"Pipes & Related Miscellaneous Items"

RFB No.: 2017-046-04-05-FAZ

HIDALGO COUNTY
PURCHASING DEPARTMENT
Bidder/Vendor Application

Complete in print or type. Please return this application to the Hidalgo County Purchasing Department thru Facsimile: (956) 318-2629 or (956) 292-7612 in person or regular mail to: 2812 S. Business Hwy. 281 , Edinburg, Texas 78539 or email: purchasing@co.hidalgo.tx.us

Company Name: **Telephone No. ( )**
dba Name:
Legal Name:
Mailing Address : **Fax No. ( )**
Physical Address:
City, State, Zip **Tax I.D. No.**
Remit to Address : **City, State, Zip**
E-Mail Address:
Representative(s) Name(s) & Title(s)
Type of Organization (check one): _____ Individual _____ Partnership _____ Corporation _____Non-Profit _____ LLC _____ Sole Proprietor _____ Other, Specify **State Identification No._____ (Please attached completed W-9 form with this application)** **Federal Identification No. or (if individual) SS No.**
State of Incorporation: _____ Date:_____ Other:
Type of Business (check one): _____ Manufacturer _____ Wholesaler _____ Retailer _____ Broker _____ Distributor _____ Service Organization _____ Other, Specify
Name & Title of Person(s) Authorized to Sign Bids, Proposals, and/or Contracts:
Small and/or Disadvantaged Business Information (check application criteria) **Small Business:_____Disadvantaged Business (At Least 51% Ownership)** ☐ Less than 125,000 annual gross receipt ☐ Black American ☐ Native American ☐ Less than 250,000 annual gross receipt ☐ Hispanic American ☐ Women ☐ Less than 499,000 annual gross receipt ☐ Asian Pacific American ☐ Other ☐ More than 500,000 annual gross receipt **Have you been certified as a HUB or an MBE/WBE source?:** ☐ Yes ☐ No **Indicate Certification No.(s):_____ or are Certificate(s) attached?:** ☐ Yes ☐ No
What type of product(s) is/are solicited by your company?: **Would you like to be provided with specifications for procurements of such products?:** ☐ Yes ☐ No
To Be Completed by the County: Rec'd by (Purchasing):_____ Date Rec'd by (Purchasing): **Date Forwarded Information to Auditor's Office:_____Entry Date: _____ Vendor No.:**

Revised12/14/06

HISTORICALLY UNDERUTILIZED BUSINESS (HUB) DECLARATION

The primary objective of the Hidalgo County HUB Program is to ensure Historically Underutilized Businesses receive a fair and equal opportunity for participation in the County's procurement process. This fact holds true for Services (Professional & Non-Professional), Commodities, and Construction contracts and any subcontracts thereto. The program strongly encourages Prime Contractors to provide subcontracting opportunities to Certified Hub Contractors/Vendors. Our goal for HUB contractor/vendor participation, as well as HUB subcontractor participation is 30%. To be considered as a "Certified HUB Contractor/Vendor" the contractor/vendor must have been certified by, and hold a current and valid certification with any of the three agencies listed below.

Have you been Certified as a HUB or an MBE/WBE source?: ☐Yes ☐ No

If yes, by whom?: ☐ Texas Building & Procurement Commission ☐ Other_____

Indicate Certification No(s).:_____ or Are Certificate(s) Attached?: ☐ Yes ☐ No

---

LIST OF CERTIFIED HUB SUBCONTRACTORS

(Attach additional pages if necessary)

What percentage of the Bid, RFP,or RFQ is to be subcontracted with Certified HUB sources?: _____%
(List HUB Subcontractor information below).

HUB Subcontractor Name: _____ HUB Status:
Certifying Agency (Check all applicable): ☐Texas Building & Procurement Commission ☐ Other
Address: _____ City: _____ State: _____ Zip:
Contact Person: _____ Title: _____ Phone No.: ( )
Subcontract Amount: $_____ Description of Work to be Performed:

HUB Subcontractor Name: _____ HUB Status:
Certifying Agency (Check all applicable): ☐Texas Building & Procurement Commission ☐ Other
Address: _____ City: _____ State: _____ Zip:
Contact Person: _____ Title: _____ Phone No.: ( )
Subcontract Amount: $_____ Description of Work to be Performed:

HUB Subcontractor Name: _____ HUB Status:
Certifying Agency (Check all applicable): ☐Texas Building & Procurement Commission ☐ Other
Address: _____ City: _____ State: _____ Zip:
Contact Person: _____ Title: _____ Phone No.: ( )
Subcontract Amount: $_____ Description of Work to be Performed:

Form **W-9**
(Rev. December 2014)
Department of the Treasury
Internal Revenue Service

Request for Taxpayer Identification Number and Certification

Give Form to the requester. Do not send to the IRS.

Print or type
See Specific Instructions on page 2.

1 Name (as shown on your income tax return). Name is required on this line; do not leave this line blank.

2 Business name/disregarded entity name, if different from above

3 Check appropriate box for federal tax classification; check only **one** of the following seven boxes:

☐ Individual/sole proprietor or single-member LLC ☐ C Corporation ☐ S Corporation ☐ Partnership ☐ Trust/estate

☐ Limited liability company. Enter the tax classification (C=C corporation, S=S corporation, P=partnership) ▶ _____

Note. For a single-member LLC that is disregarded, do not check LLC; check the appropriate box in the line above for the tax classification of the single-member owner.

☐ Other (see instructions) ▶

4 Exemptions (codes apply only to certain entities, not individuals; see instructions on page 3):

Exempt payee code (if any) _____

Exemption from FATCA reporting code (if any) _____

(Applies to accounts maintained outside the U.S.)

5 Address (number, street, and apt. or suite no.)

Requester's name and address (optional)

6 City, state, and ZIP code

7 List account number(s) here (optional)

Part I Taxpayer Identification Number (TIN)

Enter your TIN in the appropriate box. The TIN provided must match the name given on line 1 to avoid backup withholding. For individuals, this is generally your social security number (SSN). However, for a resident alien, sole proprietor, or disregarded entity, see the Part I instructions on page 3. For other entities, it is your employer identification number (EIN). If you do not have a number, see *How to get a TIN* on page 3.

Note. If the account is in more than one name, see the instructions for line 1 and the chart on page 4 for guidelines on whose number to enter.

Social security number

			–		–				

or

Employer identification number

		–							

Part II Certification

Under penalties of perjury, I certify that:

1. The number shown on this form is my correct taxpayer identification number (or I am waiting for a number to be issued to me); and
2. I am not subject to backup withholding because: (a) I am exempt from backup withholding, or (b) I have not been notified by the Internal Revenue Service (IRS) that I am subject to backup withholding as a result of a failure to report all interest or dividends, or (c) the IRS has notified me that I am no longer subject to backup withholding; and
3. I am a U.S. citizen or other U.S. person (defined below); and
4. The FATCA code(s) entered on this form (if any) indicating that I am exempt from FATCA reporting is correct.

Certification instructions. You must cross out item 2 above if you have been notified by the IRS that you are currently subject to backup withholding because you have failed to report all interest and dividends on your tax return. For real estate transactions, item 2 does not apply. For mortgage interest paid, acquisition or abandonment of secured property, cancellation of debt, contributions to an individual retirement arrangement (IRA), and generally, payments other than interest and dividends, you are not required to sign the certification, but you must provide your correct TIN. See the instructions on page 3.

Sign Here | **Signature of U.S. person** ▶ | **Date** ▶

General Instructions

Section references are to the Internal Revenue Code unless otherwise noted.

Future developments. Information about developments affecting Form W-9 (such as legislation enacted after we release it) is at *www.irs.gov/fw9*.

Purpose of Form

An individual or entity (Form W-9 requester) who is required to file an information return with the IRS must obtain your correct taxpayer identification number (TIN) which may be your social security number (SSN), individual taxpayer identification number (ITIN), adoption taxpayer identification number (ATIN), or employer identification number (EIN), to report on an information return the amount paid to you, or other amount reportable on an information return. Examples of information returns include, but are not limited to, the following:

- Form 1099-INT (interest earned or paid)
- Form 1099-DIV (dividends, including those from stocks or mutual funds)
- Form 1099-MISC (various types of income, prizes, awards, or gross proceeds)
- Form 1099-B (stock or mutual fund sales and certain other transactions by brokers)
- Form 1099-S (proceeds from real estate transactions)
- Form 1099-K (merchant card and third party network transactions)
- Form 1098 (home mortgage interest), 1098-E (student loan interest), 1098-T (tuition)
- Form 1099-C (canceled debt)
- Form 1099-A (acquisition or abandonment of secured property)

Use Form W-9 only if you are a U.S. person (including a resident alien), to provide your correct TIN.

If you do not return Form W-9 to the requester with a TIN, you might be subject to backup withholding. See *What is backup withholding?* on page 2.

By signing the filled-out form, you:

1. Certify that the TIN you are giving is correct (or you are waiting for a number to be issued),
2. Certify that you are not subject to backup withholding, or
3. Claim exemption from backup withholding if you are a U.S. exempt payee. If applicable, you are also certifying that as a U.S. person, your allocable share of any partnership income from a U.S. trade or business is not subject to the withholding tax on foreign partners' share of effectively connected income, and
4. Certify that FATCA code(s) entered on this form (if any) indicating that you are exempt from the FATCA reporting, is correct. See *What is FATCA reporting?* on page 2 for further information.

Note. If you are a U.S. person and a requester gives you a form other than Form W-9 to request your TIN, you must use the requester's form if it is substantially similar to this Form W-9.

Definition of a U.S. person. For federal tax purposes, you are considered a U.S. person if you are:

- An individual who is a U.S. citizen or U.S. resident alien;
- A partnership, corporation, company, or association created or organized in the United States or under the laws of the United States;
- An estate (other than a foreign estate); or
- A domestic trust (as defined in Regulations section 301.7701-7).

Special rules for partnerships. Partnerships that conduct a trade or business in the United States are generally required to pay a withholding tax under section 1446 on any foreign partners' share of effectively connected taxable income from such business. Further, in certain cases where a Form W-9 has not been received, the rules under section 1446 require a partnership to presume that a partner is a foreign person, and pay the section 1446 withholding tax. Therefore, if you are a U.S. person that is a partner in a partnership conducting a trade or business in the United States, provide Form W-9 to the partnership to establish your U.S. status and avoid section 1446 withholding on your share of partnership income.

In the cases below, the following person must give Form W-9 to the partnership for purposes of establishing its U.S. status and avoiding withholding on its allocable share of net income from the partnership conducting a trade or business in the United States:

- In the case of a disregarded entity with a U.S. owner, the U.S. owner of the disregarded entity and not the entity;
- In the case of a grantor trust with a U.S. grantor or other U.S. owner, generally, the U.S. grantor or other U.S. owner of the grantor trust and not the trust; and
- In the case of a U.S. trust (other than a grantor trust), the U.S. trust (other than a grantor trust) and not the beneficiaries of the trust.

Foreign person. If you are a foreign person or the U.S. branch of a foreign bank that has elected to be treated as a U.S. person, do not use Form W-9. Instead, use the appropriate Form W-8 or Form 8233 (see Publication 515, Withholding of Tax on Nonresident Aliens and Foreign Entities).

Nonresident alien who becomes a resident alien. Generally, only a nonresident alien individual may use the terms of a tax treaty to reduce or eliminate U.S. tax on certain types of income. However, most tax treaties contain a provision known as a "saving clause." Exceptions specified in the saving clause may permit an exemption from tax to continue for certain types of income even after the payee has otherwise become a U.S. resident alien for tax purposes.

If you are a U.S. resident alien who is relying on an exception contained in the saving clause of a tax treaty to claim an exemption from U.S. tax on certain types of income, you must attach a statement to Form W-9 that specifies the following five items:

1. The treaty country. Generally, this must be the same treaty under which you claimed exemption from tax as a nonresident alien.
2. The treaty article addressing the income.
3. The article number (or location) in the tax treaty that contains the saving clause and its exceptions.
4. The type and amount of income that qualifies for the exemption from tax.
5. Sufficient facts to justify the exemption from tax under the terms of the treaty article.

Example. Article 20 of the U.S.-China income tax treaty allows an exemption from tax for scholarship income received by a Chinese student temporarily present in the United States. Under U.S. law, this student will become a resident alien for tax purposes if his or her stay in the United States exceeds 5 calendar years. However, paragraph 2 of the first Protocol to the U.S.-China treaty (dated April 30, 1984) allows the provisions of Article 20 to continue to apply even after the Chinese student becomes a resident alien of the United States. A Chinese student who qualifies for this exception (under paragraph 2 of the first protocol) and is relying on this exception to claim an exemption from tax on his or her scholarship or fellowship income would attach to Form W-9 a statement that includes the information described above to support that exemption.

If you are a nonresident alien or a foreign entity, give the requester the appropriate completed Form W-8 or Form 8233.

Backup Withholding

What is backup withholding? Persons making certain payments to you must under certain conditions withhold and pay to the IRS 28% of such payments. This is called "backup withholding." Payments that may be subject to backup withholding include interest, tax-exempt interest, dividends, broker and barter exchange transactions, rents, royalties, nonemployee pay, payments made in settlement of payment card and third party network transactions, and certain payments from fishing boat operators. Real estate transactions are not subject to backup withholding.

You will not be subject to backup withholding on payments you receive if you give the requester your correct TIN, make the proper certifications, and report all your taxable interest and dividends on your tax return.

Payments you receive will be subject to backup withholding if:

1. You do not furnish your TIN to the requester,
2. You do not certify your TIN when required (see the Part II instructions on page 3 for details),
3. The IRS tells the requester that you furnished an incorrect TIN,
4. The IRS tells you that you are subject to backup withholding because you did not report all your interest and dividends on your tax return (for reportable interest and dividends only), or
5. You do not certify to the requester that you are not subject to backup withholding under 4 above (for reportable interest and dividend accounts opened after 1983 only).

Certain payees and payments are exempt from backup withholding. See *Exempt payee code* on page 3 and the separate Instructions for the Requester of Form W-9 for more information.

Also see *Special rules for partnerships* above.

What is FATCA reporting?

The Foreign Account Tax Compliance Act (FATCA) requires a participating foreign financial institution to report all United States account holders that are specified United States persons. Certain payees are exempt from FATCA reporting. See *Exemption from FATCA reporting code* on page 3 and the Instructions for the Requester of Form W-9 for more information.

Updating Your Information

You must provide updated information to any person to whom you claimed to be an exempt payee if you are no longer an exempt payee and anticipate receiving reportable payments in the future from this person. For example, you may need to provide updated information if you are a C corporation that elects to be an S corporation, or if you no longer are tax exempt. In addition, you must furnish a new Form W-9 if the name or TIN changes for the account; for example, if the grantor of a grantor trust dies.

Penalties

Failure to furnish TIN. If you fail to furnish your correct TIN to a requester, you are subject to a penalty of $50 for each such failure unless your failure is due to reasonable cause and not to willful neglect.

Civil penalty for false information with respect to withholding. If you make a false statement with no reasonable basis that results in no backup withholding, you are subject to a $500 penalty.

Criminal penalty for falsifying information. Willfully falsifying certifications or affirmations may subject you to criminal penalties including fines and/or imprisonment.

Misuse of TINs. If the requester discloses or uses TINs in violation of federal law, the requester may be subject to civil and criminal penalties.

Specific Instructions

Line 1

You must enter one of the following on this line; **do not** leave this line blank. The name should match the name on your tax return.

If this Form W-9 is for a joint account, list first, and then circle, the name of the person or entity whose number you entered in Part I of Form W-9.

a. **Individual.** Generally, enter the name shown on your tax return. If you have changed your last name without informing the Social Security Administration (SSA) of the name change, enter your first name, the last name as shown on your social security card, and your new last name.

Note. ITIN applicant: Enter your individual name as it was entered on your Form W-7 application, line 1a. This should also be the same as the name you entered on the Form 1040/1040A/1040EZ you filed with your application.

b. **Sole proprietor or single-member LLC.** Enter your individual name as shown on your 1040/1040A/1040EZ on line 1. You may enter your business, trade, or "doing business as" (DBA) name on line 2.

c. **Partnership, LLC that is not a single-member LLC, C Corporation, or S Corporation.** Enter the entity's name as shown on the entity's tax return on line 1 and any business, trade, or DBA name on line 2.

d. **Other entities.** Enter your name as shown on required U.S. federal tax documents on line 1. This name should match the name shown on the charter or other legal document creating the entity. You may enter any business, trade, or DBA name on line 2.

e. **Disregarded entity.** For U.S. federal tax purposes, an entity that is disregarded as an entity separate from its owner is treated as a "disregarded entity." See Regulations section 301.7701-2(c)(2)(iii). Enter the owner's name on line 1. The name of the entity entered on line 1 should never be a disregarded entity. The name on line 1 should be the name shown on the income tax return on which the income should be reported. For example, if a foreign LLC that is treated as a disregarded entity for U.S. federal tax purposes has a single owner that is a U.S. person, the U.S. owner's name is required to be provided on line 1. If the direct owner of the entity is also a disregarded entity, enter the first owner that is not disregarded for federal tax purposes. Enter the disregarded entity's name on line 2, "Business name/disregarded entity name." If the owner of the disregarded entity is a foreign person, the owner must complete an appropriate Form W-8 instead of a Form W-9. This is the case even if the foreign person has a U.S. TIN.

Line 2

If you have a business name, trade name, DBA name, or disregarded entity name, you may enter it on line 2.

Line 3

Check the appropriate box in line 3 for the U.S. federal tax classification of the person whose name is entered on line 1. Check only one box in line 3.

Limited Liability Company (LLC). If the name on line 1 is an LLC treated as a partnership for U.S. federal tax purposes, check the "Limited Liability Company" box and enter "P" in the space provided. If the LLC has filed Form 8832 or 2553 to be taxed as a corporation, check the "Limited Liability Company" box and in the space provided enter "C" for C corporation or "S" for S corporation. If it is a single-member LLC that is a disregarded entity, do not check the "Limited Liability Company" box; instead check the first box in line 3 "Individual/sole proprietor or single-member LLC."

Line 4, Exemptions

If you are exempt from backup withholding and/or FATCA reporting, enter in the appropriate space in line 4 any code(s) that may apply to you.

Exempt payee code.

- Generally, individuals (including sole proprietors) are not exempt from backup withholding.
- Except as provided below, corporations are exempt from backup withholding for certain payments, including interest and dividends.
- Corporations are not exempt from backup withholding for payments made in settlement of payment card or third party network transactions.
- Corporations are not exempt from backup withholding with respect to attorneys' fees or gross proceeds paid to attorneys, and corporations that provide medical or health care services are not exempt with respect to payments reportable on Form 1099-MISC.

The following codes identify payees that are exempt from backup withholding. Enter the appropriate code in the space in line 4.

1—An organization exempt from tax under section 501(a), any IRA, or a custodial account under section 403(b)(7) if the account satisfies the requirements of section 401(f)(2)

2—The United States or any of its agencies or instrumentalities

3—A state, the District of Columbia, a U.S. commonwealth or possession, or any of their political subdivisions or instrumentalities

4—A foreign government or any of its political subdivisions, agencies, or instrumentalities

5—A corporation

6—A dealer in securities or commodities required to register in the United States, the District of Columbia, or a U.S. commonwealth or possession

7—A futures commission merchant registered with the Commodity Futures Trading Commission

8—A real estate investment trust

9—An entity registered at all times during the tax year under the Investment Company Act of 1940

10—A common trust fund operated by a bank under section 584(a)

11—A financial institution

12—A middleman known in the investment community as a nominee or custodian

13—A trust exempt from tax under section 664 or described in section 4947

The following chart shows types of payments that may be exempt from backup withholding. The chart applies to the exempt payees listed above, 1 through 13.

IF the payment is for . . .	THEN the payment is exempt for . . .
Interest and dividend payments	All exempt payees except for 7
Broker transactions	Exempt payees 1 through 4 and 6 through 11 and all C corporations. S corporations must not enter an exempt payee code because they are exempt only for sales of noncovered securities acquired prior to 2012.
Barter exchange transactions and patronage dividends	Exempt payees 1 through 4
Payments over $600 required to be reported and direct sales over $5,000[1]	Generally, exempt payees 1 through 5[2]
Payments made in settlement of payment card or third party network transactions	Exempt payees 1 through 4

[1] See Form 1099-MISC, Miscellaneous Income, and its instructions.

[2] However, the following payments made to a corporation and reportable on Form 1099-MISC are not exempt from backup withholding: medical and health care payments, attorneys' fees, gross proceeds paid to an attorney reportable under section 6045(f), and payments for services paid by a federal executive agency.

Exemption from FATCA reporting code. The following codes identify payees that are exempt from reporting under FATCA. These codes apply to persons submitting this form for accounts maintained outside of the United States by certain foreign financial institutions. Therefore, if you are only submitting this form for an account you hold in the United States, you may leave this field blank. Consult with the person requesting this form if you are uncertain if the financial institution is subject to these requirements. A requester may indicate that a code is not required by providing you with a Form W-9 with "Not Applicable" (or any similar indication) written or printed on the line for a FATCA exemption code.

A—An organization exempt from tax under section 501(a) or any individual retirement plan as defined in section 7701(a)(37)

B—The United States or any of its agencies or instrumentalities

C—A state, the District of Columbia, a U.S. commonwealth or possession, or any of their political subdivisions or instrumentalities

D—A corporation the stock of which is regularly traded on one or more established securities markets, as described in Regulations section 1.1472-1(c)(1)(i)

E—A corporation that is a member of the same expanded affiliated group as a corporation described in Regulations section 1.1472-1(c)(1)(i)

F—A dealer in securities, commodities, or derivative financial instruments (including notional principal contracts, futures, forwards, and options) that is registered as such under the laws of the United States or any state

G—A real estate investment trust

H—A regulated investment company as defined in section 851 or an entity registered at all times during the tax year under the Investment Company Act of 1940

I—A common trust fund as defined in section 584(a)

J—A bank as defined in section 581

K—A broker

L—A trust exempt from tax under section 664 or described in section 4947(a)(1)

M—A tax exempt trust under a section 403(b) plan or section 457(g) plan

Note. You may wish to consult with the financial institution requesting this form to determine whether the FATCA code and/or exempt payee code should be completed.

Line 5

Enter your address (number, street, and apartment or suite number). This is where the requester of this Form W-9 will mail your information returns.

Line 6

Enter your city, state, and ZIP code.

Part I. Taxpayer Identification Number (TIN)

Enter your TIN in the appropriate box. If you are a resident alien and you do not have and are not eligible to get an SSN, your TIN is your IRS individual taxpayer identification number (ITIN). Enter it in the social security number box. If you do not have an ITIN, see *How to get a TIN* below.

If you are a sole proprietor and you have an EIN, you may enter either your SSN or EIN. However, the IRS prefers that you use your SSN.

If you are a single-member LLC that is disregarded as an entity separate from its owner (see *Limited Liability Company (LLC)* on this page), enter the owner's SSN (or EIN, if the owner has one). Do not enter the disregarded entity's EIN. If the LLC is classified as a corporation or partnership, enter the entity's EIN.

Note. See the chart on page 4 for further clarification of name and TIN combinations.

How to get a TIN. If you do not have a TIN, apply for one immediately. To apply for an SSN, get Form SS-5, Application for a Social Security Card, from your local SSA office or get this form online at *www.ssa.gov*. You may also get this form by calling 1-800-772-1213. Use Form W-7, Application for IRS Individual Taxpayer Identification Number, to apply for an ITIN, or Form SS-4, Application for Employer Identification Number, to apply for an EIN. You can apply for an EIN online by accessing the IRS website at *www.irs.gov/businesses* and clicking on Employer Identification Number (EIN) under Starting a Business. You can get Forms W-7 and SS-4 from the IRS by visiting IRS.gov or by calling 1-800-TAX-FORM (1-800-829-3676).

If you are asked to complete Form W-9 but do not have a TIN, apply for a TIN and write "Applied For" in the space for the TIN, sign and date the form, and give it to the requester. For interest and dividend payments, and certain payments made with respect to readily tradable instruments, generally you will have 60 days to get a TIN and give it to the requester before you are subject to backup withholding on payments. The 60-day rule does not apply to other types of payments. You will be subject to backup withholding on all such payments until you provide your TIN to the requester.

Note. Entering "Applied For" means that you have already applied for a TIN or that you intend to apply for one soon.

Caution: *A disregarded U.S. entity that has a foreign owner must use the appropriate Form W-8.*

Part II. Certification

To establish to the withholding agent that you are a U.S. person, or resident alien, sign Form W-9. You may be requested to sign by the withholding agent even if items 1, 4, or 5 below indicate otherwise.

For a joint account, only the person whose TIN is shown in Part I should sign (when required). In the case of a disregarded entity, the person identified on line 1 must sign. Exempt payees, see *Exempt payee code* earlier.

Signature requirements. Complete the certification as indicated in items 1 through 5 below.

1. Interest, dividend, and barter exchange accounts opened before 1984 and broker accounts considered active during 1983. You must give your correct TIN, but you do not have to sign the certification.

2. Interest, dividend, broker, and barter exchange accounts opened after 1983 and broker accounts considered inactive during 1983. You must sign the certification or backup withholding will apply. If you are subject to backup withholding and you are merely providing your correct TIN to the requester, you must cross out item 2 in the certification before signing the form.

3. Real estate transactions. You must sign the certification. You may cross out item 2 of the certification.

4. Other payments. You must give your correct TIN, but you do not have to sign the certification unless you have been notified that you have previously given an incorrect TIN. "Other payments" include payments made in the course of the requester's trade or business for rents, royalties, goods (other than bills for merchandise), medical and health care services (including payments to corporations), payments to a nonemployee for services, payments made in settlement of payment card and third party network transactions, payments to certain fishing boat crew members and fishermen, and gross proceeds paid to attorneys (including payments to corporations).

5. Mortgage interest paid by you, acquisition or abandonment of secured property, cancellation of debt, qualified tuition program payments (under section 529), IRA, Coverdell ESA, Archer MSA or HSA contributions or distributions, and pension distributions. You must give your correct TIN, but you do not have to sign the certification.

What Name and Number To Give the Requester

For this type of account:	Give name and SSN of:
1. Individual	The individual
2. Two or more individuals (joint account)	The actual owner of the account or, if combined funds, the first individual on the account[1]
3. Custodian account of a minor (Uniform Gift to Minors Act)	The minor[2]
4. a. The usual revocable savings trust (grantor is also trustee) b. So-called trust account that is not a legal or valid trust under state law	The grantor-trustee[1] The actual owner[1]
5. Sole proprietorship or disregarded entity owned by an individual	The owner[3]
6. Grantor trust filing under Optional Form 1099 Filing Method 1 (see Regulations section 1.671-4(b)(2)(i)(A))	The grantor*
For this type of account:	**Give name and EIN of:**
7. Disregarded entity not owned by an individual	The owner
8. A valid trust, estate, or pension trust	Legal entity[4]
9. Corporation or LLC electing corporate status on Form 8832 or Form 2553	The corporation
10. Association, club, religious, charitable, educational, or other tax-exempt organization	The organization
11. Partnership or multi-member LLC	The partnership
12. A broker or registered nominee	The broker or nominee
13. Account with the Department of Agriculture in the name of a public entity (such as a state or local government, school district, or prison) that receives agricultural program payments	The public entity
14. Grantor trust filing under the Form 1041 Filing Method or the Optional Form 1099 Filing Method 2 (see Regulations section 1.671-4(b)(2)(i)(B))	The trust

[1] List first and circle the name of the person whose number you furnish. If only one person on a joint account has an SSN, that person's number must be furnished.

[2] Circle the minor's name and furnish the minor's SSN.

[3] You must show your individual name and you may also enter your business or DBA name on the "Business name/disregarded entity" name line. You may use either your SSN or EIN (if you have one), but the IRS encourages you to use your SSN.

[4] List first and circle the name of the trust, estate, or pension trust. (Do not furnish the TIN of the personal representative or trustee unless the legal entity itself is not designated in the account title.) Also see *Special rules for partnerships* on page 2.

*Note. Grantor also must provide a Form W-9 to trustee of trust.

Note. If no name is circled when more than one name is listed, the number will be considered to be that of the first name listed.

Secure Your Tax Records from Identity Theft

Identity theft occurs when someone uses your personal information such as your name, SSN, or other identifying information, without your permission, to commit fraud or other crimes. An identity thief may use your SSN to get a job or may file a tax return using your SSN to receive a refund.

To reduce your risk:

- Protect your SSN,
- Ensure your employer is protecting your SSN, and
- Be careful when choosing a tax preparer.

If your tax records are affected by identity theft and you receive a notice from the IRS, respond right away to the name and phone number printed on the IRS notice or letter.

If your tax records are not currently affected by identity theft but you think you are at risk due to a lost or stolen purse or wallet, questionable credit card activity or credit report, contact the IRS Identity Theft Hotline at 1-800-908-4490 or submit Form 14039.

For more information, see Publication 4535, Identity Theft Prevention and Victim Assistance.

Victims of identity theft who are experiencing economic harm or a system problem, or are seeking help in resolving tax problems that have not been resolved through normal channels, may be eligible for Taxpayer Advocate Service (TAS) assistance. You can reach TAS by calling the TAS toll-free case intake line at 1-877-777-4778 or TTY/TDD 1-800-829-4059.

Protect yourself from suspicious emails or phishing schemes. Phishing is the creation and use of email and websites designed to mimic legitimate business emails and websites. The most common act is sending an email to a user falsely claiming to be an established legitimate enterprise in an attempt to scam the user into surrendering private information that will be used for identity theft.

The IRS does not initiate contacts with taxpayers via emails. Also, the IRS does not request personal detailed information through email or ask taxpayers for the PIN numbers, passwords, or similar secret access information for their credit card, bank, or other financial accounts.

If you receive an unsolicited email claiming to be from the IRS, forward this message to *phishing@irs.gov*. You may also report misuse of the IRS name, logo, or other IRS property to the Treasury Inspector General for Tax Administration (TIGTA) at 1-800-366-4484. You can forward suspicious emails to the Federal Trade Commission at: *spam@uce.gov* or contact them at *www.ftc.gov/idtheft* or 1-877-IDTHEFT (1-877-438-4338).

Visit IRS.gov to learn more about identity theft and how to reduce your risk.

Privacy Act Notice

Section 6109 of the Internal Revenue Code requires you to provide your correct TIN to persons (including federal agencies) who are required to file information returns with the IRS to report interest, dividends, or certain other income paid to you; mortgage interest you paid; the acquisition or abandonment of secured property; the cancellation of debt; or contributions you made to an IRA, Archer MSA, or HSA. The person collecting this form uses the information on the form to file information returns with the IRS, reporting the above information. Routine uses of this information include giving it to the Department of Justice for civil and criminal litigation and to cities, states, the District of Columbia, and U.S. commonwealths and possessions for use in administering their laws. The information also may be disclosed to other countries under a treaty, to federal and state agencies to enforce civil and criminal laws, or to federal law enforcement and intelligence agencies to combat terrorism. You must provide your TIN whether or not you are required to file a tax return. Under section 3406, payers must generally withhold a percentage of taxable interest, dividend, and certain other payments to a payee who does not give a TIN to the payer. Certain penalties may also apply for providing false or fraudulent information.

CERTIFICATION REGARDING DEBARMENT

REQUEST FOR BIDS

Hidalgo County

(All funding sources, programs & entities)

"Pipes & Related Miscellaneous Items"

RFB No.: 2017-046-04-05-FAZ

Certification
Regarding Debarment, Suspension and Ineligibility

As is required by the Federal Regulations Implementing Executive Order 12549, Debarment and Suspension, 45 CFR Part 76, Government-wide Debarment and Suspension, the applicant certifies, to the best of his or her knowledge and belief, that both it and its principals:

a. Are not presently debarred, suspended, proposed for debarment, declared ineligible, or voluntarily excluded from participation in this transaction by any federal department or agency;

b. Have not within a three-year period preceding this bid proposal and/or application been convicted of or had a civil judgment rendered against them for commission of fraud or a criminal offense in connection with obtaining, attempting to obtain, or performing a public (federal, state, or local) transaction or contract under a public transaction, violation of federal or state antitrust statutes or commission of embezzlement, theft, forgery, bribery, falsification or destruction of records, making false statements, or receiving stolen property;

c. Are not presently indicted for or otherwise criminally or civilly charged by a government entity with commission of any of the offenses enumerated herein; and

d. Have not within a three-year period preceding this bid proposal and/or application had one or more public transactions terminated for cause or default.

Signature:_____
Print Name:_____
Title:_____
Telephone Number:_____
Date:_____

If the bidder is unable to certify to all of the statements in this Certification, such bidder should attach an explanation to this proposal.

EXHIBIT "G"

APPENDICES

APPENDIX A

During the performance of this contract, the contractor, for itself, its assignees, and successors in interest (hereinafter referred to as the "contractor") agrees as follows:

1. **Compliance with Regulations**: The contractor (hereinafter includes consultants)will comply with the Acts and the Regulations relative to Nondiscrimination in Federally-assisted programs of the U.S. Department of Transportation, the Federal Highway Administration, as they may be amended from time to time, which are herein incorporated by reference and made a part of this contract.

2. **Nondiscrimination**: The contractor, with regard to the work performed by it during the contract, will not discriminate on the grounds of race, color, or national origin in the selection and retention of subcontractors, including procurements of materials and leases of equipment. The contractor will not participate directly or indirectly in the discrimination prohibited by the Acts and the Regulations, including employment practices when the contract covers any activity, project, or program set forth in Appendix B of49 CFR Part 21.

3. **Solicitations for Subcontracts, Including Procurements of Materials and Equipment**: In all solicitations, either by competitive bidding, or negotiation made by the contractor for work to be performed under a subcontract, including procurements of materials, or leases of equipment, each potential subcontractor or supplier will be notified by the contractor of the contractor's obligations under this contract and the Acts and the Regulations relative to Nondiscrimination on the grounds of race, color, or national origin.

4. **Information and Reports**: The contractor will provide all information and reports required by the Acts, the Regulations, and directives issued pursuant thereto and will permit access to its books, records, accounts, other sources of information, and its facilities as may be determined by the Recipient or the Federal Highway Administration to be pertinent to ascertain compliance with such Acts, Regulations, and instructions. Where any information required of a contractor is in the exclusive possession of another who fails or refuses to furnish the information, the contractor will so certify to the Recipient or the Federal Highway Administration, as appropriate, and will set forth what efforts it has made to obtain the information.

5. **Sanctions for Noncompliance**: In the event of a contractor's noncompliance with the Nondiscrimination provisions of this contract, the Recipient will impose such contract sanctions as it or the Federal Highway Administration may determine to be appropriate, including, but not limited to:

   a. withholding payments to the contractor under the contract until the contractor complies; and/or
   b. cancelling, terminating, or suspending contract, in whole or in part.

6. **Incorporation of Provisions**: The contractor will include the provisions of paragraphs one through six in every subcontract, including procurements of materials and leases of equipment, unless exempt by the Acts, the Regulations and directives issued pursuant thereto. The contractor will take action with respect to any subcontract or procurement as the Recipient or the Federal Highway Administration may direct as a means of enforcing such provisions including sanctions for noncompliance. Provided, that if the contractor becomes involved in, or is threatened with litigation by a subcontractor, or supplier because of such direction, the contractor may request the Recipient to enter into any litigation to protect the interests of the Recipient. In addition, the contractor may request the United States to enter into the litigation to protect the interests of the United States.

APPENDIX B

CLAUSES FOR DEEDS TRANSFERRING UNITED STATES PROPERTY

The following clauses will be included in deeds effecting or recording the transfer of real property, structures, or improvements thereon, or granting interest therein from the United States pursuant to the provisions of Assurance 4:

NOW, THEREFORE, the U.S. Department of Transportation as authorized by law and upon the condition that the **COUNTY OF HIDALGO** will accept title to the lands and maintain the project constructed thereon in accordance with all applicable federal statutes, the Regulations for the Administration of all Department of Transportation programs, and the policies and procedures prescribed by the Federal Highway Administration of the U.S. Department of Transportation in accordance and in compliance with all requirements imposed by Title 49, Code of Federal Regulations, U.S. Department of Transportation, Subtitle A, Office of the Secretary, Part 21, Nondiscrimination in Federally-assisted programs of the U.S. Department of Transportation pertaining to and effectuating the provisions of Title VI of the Civil Rights Act of 1964 (78 Stat. 252; 42 U.S.C. § 2000d to 2000d-4), does hereby remise, release, quitclaim and convey unto the **COUNTY OF HIDALGO** all the right, title and interest of the U.S. Department of Transportation in and to said lands described in Exhibit 1 attached hereto and made a part hereof.

(HABENDUM CLAUSE)

TO HAVE AND TO HOLD said lands and interests therein unto **COUNTY OF HIDALGO** and its successors forever, subject, however, to the covenants, conditions, restrictions and reservations herein contained as follows, which will remain in effect for the period during which the real property or structures are used for a purpose for which Federal financial assistance is extended or for another purpose involving the provision of similar services or benefits and will be binding on the **COUNTY OF HIDALGO**, its successors and assigns.

The **COUNTY OF HIDALGO**, in consideration of the conveyance of said lands and interests in lands, does hereby covenant and agree as a covenant running with the land for itself, its successors and assigns, that (1) no person will on the grounds of race, color, or national origin, be excluded from participation in, be denied the benefits of, or be otherwise subjected to discrimination with regard to any facility located wholly or in part on, over ,or under such lands hereby conveyed [,] [and]* (2) that the **COUNTY OF HIDALGO** will use the lands and interests in lands and interests in lands so conveyed, in compliance with all requirements imposed by or pursuant to Title 49, Code of Federal Regulations, U.S. Department of Transportation, Subtitle A, Office of the Secretary, Part 21, Nondiscrimination in Federally-assisted programs of the U.S. Department of Transportation, Effectuation of Title VI of the Civil Rights Act of 1964, and as said Regulations and Acts may be amended[, and(3) that in the event of breach of any of the above-mentioned nondiscrimination conditions, the Department will have a right to enter or re-enter said lands and facilities on said land ,and that above described land and facilities will thereon revert to and vest in and become the absolute property of the U.S. Department of Transportation and its assigns as such interest existed prior to this instruction].*

(*Reverted clause and related language to be used only when it is determined that such a clause is necessary in order to make clear the purpose of Title VI.)

APPENDIX C

CLAUSES FOR TRANSFER OF REAL PROPERTY ACQUIRED OR IMPROVED UNDER THE ACTIVITY, FACILITY, OR PROGRAM

The following clauses will be included in deeds, licenses, leases, permits, or similar instruments entered into by the **COUNTY OF HIDALGO** pursuant to the provisions of Assurance 7(a):

A. The (grantee, lessee, permittee, etc. as appropriate) for himself/herself, his/her heirs, personal representatives, successors in interest, and assigns, as a part of the consideration hereof, does hereby covenant and agree [in the case of deeds and leases add "as a covenant running with the land"] that:

   1. In the event facilities are constructed, maintained, or otherwise operated on the property described in this (deed, license, lease, permit, etc.) for a purpose for which a U.S. Department of Transportation activity, facility, or program is extended or for another purpose involving the provision of similar services or benefits, the (grantee, licensee, lessee, permitted, etc.) will maintain and operate such facilities and services in compliance with all requirements imposed by the Acts and Regulations (as may be amended)such that no person on the grounds of race, color, or national origin, will be excluded from participation in, denied the benefits of, or be otherwise subjected to discrimination in the use of said facilities.

B. With respect to licenses, leases, permits, etc., in the event of breach of any of the above Nondiscrimination covenants, **COUNTY OF HIDALGO** will have the right to terminate the (lease, license, permit, etc.) and to enter, re-enter, and repossess said lands and facilities thereon, and hold the same as if the (lease, license, permit, etc.) had never been made or issued.*

C. With respect to a deed, in the event of breach of any of the above Nondiscrimination covenants, the **COUNTY OF HIDALGO** will have the right to enter or re-enter the lands and facilities thereon, and the above described lands and facilities will there upon revert to and vest in and become the absolute property of the **COUNTY OF HIDALGO** and its assigns.*

(*Reverted clause and related language to be used only when it is determined that such a clause is necessary in order to make clear the purpose of Title VI.)

APPENDIX D

CLAUSES FOR CONSTRUCTION/USE/ACCESS TO REAL PROPERTY ACQUIRED UNDER THE ACTIVITY, FACILITY OR PROGRAM

The following clauses will be included in deeds, licenses, permits, or similar instruments/agreements entered into by **COUNTY OF HIDALGO** pursuant to the provisions of Assurance 7(b):

A. The (grantee, licensee, permittee, etc., as appropriate) for himself/herself, his/her heirs, personal representatives, successors in interest, and assigns, as a part of the consideration hereof, does hereby covenant and agree (in the case of deeds and leases add, "as a covenant running with the land") that (1) no person on the ground of race, color ,or national origin, will be excluded from participation in, denied the benefits of, or be otherwise subjected to discrimination in the use of said facilities, (2) that in the construction of any improvements on, over, or under such land, and the furnishing of services thereon, no person on the ground of race, color, or national origin, will be excluded from participation in, denied the benefits of, or otherwise be subjected to discrimination, (3) that the (grantee, licensee, lessee, permittee, etc.) will use the premises in compliance with all other requirements imposed by or pursuant to the Acts and Regulations, as amended, set forth in this Assurance.

B. With respect to (licenses, leases, permits, etc.), in the event of breach of any of the above Nondiscrimination covenants, **COUNTY OF HIDALGO** will have the right to terminate the (license, permit, etc., as appropriate) and to enter or re-enter and repossess said land and the facilities thereon, and hold the same as if said(license, permit, etc., as appropriate) had never been made or issued.*

C. With respect to deeds, in the event of breach of any of the above Nondiscrimination covenants, **COUNTY OF HIDALGO** will there upon revert to and vest in and become the absolute property of **COUNTY OF HIDALGO** and its assigns.*

(*Reverted clause and related language to be used only when it is determined that such a clause is necessary in order to make clear the purpose of Title VI.)

APPENDIX E

During the performance of this contract, the contractor, for itself, its assignees, and successors in interest (hereinafter referred to as the "contractor") agrees to comply with the following nondiscrimination statutes and authorities; including but not limited to:

Pertinent Nondiscrimination Authorities:

- Title VI of the Civil Rights Act of 1964 (42 U.S.C. § 2000d et seq., 78 stat. 252), (prohibits discrimination on the basis of race, color, national origin); and 49CFR Part 21.
- The Uniform Relocation Assistance and Real Property Acquisition Policies Act of1970, (42U.S.C. § 4601), (prohibits unfair treatment of persons displaced or whose property has been acquired because of Federal or Federal-aid programs and projects);
- Federal-Aid Highway Act of 1973, (23U.S.C. § 324et seq.), (prohibits discrimination on the basis of sex);
- Section 504 of the Rehabilitation Act of 1973, (29U.S.C. § 794 et seq.), as amended, (prohibits discrimination on the basis of disability); and 49CFRPart 27;
- The Age Discrimination Act of 1975, as amended,(42U.S.C. § 6101 et seq.), (prohibits discrimination on the basis of age);
- Airport and Airway Improvement Act of 1982, (49U.S.C. § 4 71, Section 4 7123),as amended, (prohibits discrimination based on race, creed, color, national origin, or sex);
- The Civil Rights Restoration Act of 1987,(PL 100-209), (Broadened the scope, coverage and applicability of Title VI of the Civil Rights Act of 1964, The Age Discrimination Act of 1975 and Section 504 of the Rehabilitation Act of 1973, by expanding the definition of the terms "programs or activities" to include all of the programs or activities of the Federal-aid recipients, sub recipients and contractors, whether such programs or activities are Federally funded or not);
- Titles II and III of the Americans with Disabilities Act, which prohibit discrimination on the basis of disability in the operation of public entities, public and private transportation systems, places of public accommodation, and certain testing entities (42 U.S.C. §§ 12131-12189)as implemented by Department of Transportation regulations at 49C.F.R. parts 37 and 38;
- The Federal Aviation Administration's Nondiscrimination statute (49U.S.C. § 47123) (prohibits discrimination on the basis of race, color, national origin, and sex);
- Executive Order 12898, Federal Actions to Address Environmental Justice in Minority Populations and Low-Income Populations, which ensures discrimination against minority populations by discouraging programs, policies, and activities with disproportionately high and adverse human health or environmental effects on minority and low-income populations;
- Executive Order 13166, Improving Access to Services for Persons with Limited English Proficiency, and resulting agency guidance, national origin discrimination includes discrimination because of limited English proficiency (LEP). To ensure compliance with Title VI, you must take reasonable steps to ensure that LEP persons have meaningful access to your programs (70 Fed. Reg. at 74087 to 74100);
- Title IX of the Education Amendments of1972, as amended, which prohibits you from discriminating because of sex in education programs or activities (20 U .S.C. 1681 et seq).

HIDALGO COUNTY
(Including all funding sources, programs, and entities)
REQUEST FOR BIDS
"PIPES & RELATED MISCELLANEOUS ITEMS"

RFB No.: 2017-046-04-05-FAZ

RFB SUBMITTAL CHECK LIST

All forms listed below must be included in the RFB response.

Indicate with a check mark (✓) the Forms completed and included in this response:

_____ Page 8 of Legal Notice

_____ Exhibit "B" Bid Page

_____ Exhibit "C" Acknowledgement forms

_____ Exhibit "D" CIQ Form -Copy of Co. Clerk Recording fee receipt (if applicable)

_____ Exhibit "E" Vendor Bidder Applications and IRS form W-9

_____ Exhibit "F" Certification Regarding Debarment

_____ SAMS.gov Registration Acknowledgement www.sam.gov

_____ One (1) Original, Three (3) Copies of Bid(s) (see No. 2 of Legal Notice).

EXHIBIT “B”

BID PAGE

CATEGORY (A) – PIPES

CORRUGATED POLYVINYL CHLORIDE (PVC) STORM SEWER PIPE

NIGP CODE: 665-89 Polyvinyl Chloride (PVC)

DESCRIPTION	PRICE	
12"	$7.53	LF
15"	$11.12	LF
18"	$16.14	LF
24"	$32.38	LF
30"	$39.68	LF
36"	$55.17	LF
42"	NO BID	LF
48"	NO BID	LF

CORRUGATED STEEL STORM SEWER PIPE

NIGP CODE: 210-29 Corrugated Galvanized Metal Pipe

(UNIT PRICE INCLUDES ONE GASKETED BAND CONNECTION FOR EVERY 20 FOOT JOINT)

DIAMETER	TYPE "IR"PIPE PRICE	TYPE "I" PIPE PRICE	TYPE "IA" PIPE PRICE	
12"	NO BID	NO BID	NO BID	LF
15"	NO BID	NO BID	NO BID	LF
18"	NO BID	NO BID	NO BID	LF
24"	NO BID	NO BID	NO BID	LF
30"	NO BID	NO BID	NO BID	LF
36"	NO BID	NO BID	NO BID	LF
42"	NO BID	NO BID	NO BID	LF
48"	NO BID	NO BID	NO BID	LF
54"	NO BID	NO BID	NO BID	LF
60"	NO BID	NO BID	NO BID	LF
66"	NO BID	NO BID	NO BID	LF
72"	NO BID	NO BID	NO BID	LF
78"	NO BID	NO BID	NO BID	LF
84"	NO BID	NO BID	NO BID	LF
90"	NO BID	NO BID	NO BID	LF
96"	NO BID	NO BID	NO BID	LF
102"	NO BID	NO BID	NO BID	LF
108"	NO BID	NO BID	NO BID	LF
114"	NO BID	NO BID	NO BID	LF
120"	NO BID	NO BID	NO BID	LF
126"	NO BID	NO BID	NO BID	LF
132"	NO BID	NO BID	NO BID	LF
138"	NO BID	NO BID	NO BID	LF
144"	NO BID	NO BID	NO BID	LF

OPENED
9:54
4:57
Witnessed

REINFORCED CONCRETE PIPE – RUBBER GASKET JOINT PIPE

NIGP CODE: 658-68

DESCRIPTION	CLASS III PRICE		CLASS IV PRICE		CLASS V PRICE	
12"	$17.05	LF	$17.05	LF	$18.95	LF
15"	$21.47	LF	$24.00	LF	$24.00	LF
18"	$24.63	LF	$26.53	LF	$29.05	LF
24"	$34.11	LF	$42.32	LF	$44.84	LF
30"	$46.74	LF	$56.84	LF	$73.89	LF
36"	$70.11	LF	$88.42	LF	$104.21	LF
42"	$93.47	LF	$117.47	LF	$146.53	LF
48"	$113.05	LF	$146.53	LF	$194.53	LF
54"	$133.26	LF	$205.89	LF	$223.58	LF
60"	$168.00	LF	$234.32	LF	$267.16	LF
72"	$235.58	LF	$298.74	LF	$366.95	LF

REINFORCED CONCRETE PIPE – TONGUE & GROOVE PIPE

NIGP CODE: 658-68

DESCRIPTION	CLASS III PRICE		CLASS IV PRICE		CLASS V PRICE	
12"	$15.05	LF	$15.05	LF	$17.11	LF
15"	$16.42	LF	$17.11	LF	$21.89	LF
18"	$20.53	LF	$21.89	LF	$23.95	LF
24"	$28.74	LF	$36.26	LF	$37.63	LF
30"	$40.37	LF	$49.26	LF	$64.32	LF
36"	$58.84	LF	$68.42	LF	$108.79	LF
42"	$83.47	LF	$98.53	LF	$152.58	LF
48"	$99.89	LF	$146.42	LF	$202.53	LF
54"	$137.53	LF	$202.53	LF	$232.63	LF
60"	$160.11	LF	$230.58	LF	$279.84	LF
72"	$230.58	LF	$289.42	LF	$381.11	LF

OPENED
9:54
4-5-17
Witnessed

REINFORCED POLYTHYLENE PIPE – 20 FOOT JOINTS

NIGP CODE: 658-58

DESCRIPTION	PRICE	
24"	NO BID	LF
30"	NO BID	LF
36"	NO BID	LF
42"	NO BID	LF
48"	NO BID	LF
54"	NO BID	LF
60"	NO BID	LF
72"	NO BID	LF
84"	NO BID	LF
96"	NO BID	LF

AWWA C900 PVC PLASTIC PRESSURE PIPE

NIGP CODE: 658-56 PLASTIC PIPES **OR**
NIGP CODE: 658-60 PVC PIPES

DESCRIPTION	DR 14 PRICE		DR 18 PRICE		DR 25 PRICE	
4"	$2.72	LF	$2.13	LF	$1.55	LF
6"	$5.28	LF	$4.20	LF	$3.06	LF
8"	$9.07	LF	$7.28	LF	$5.26	LF
10"	$13.81	LF	$10.94	LF	$7.95	LF
12"	$19.52	LF	$15.43	LF	$11.24	LF

AWWA C905 PVC PLASTIC WATER PIPE

NIGP CODE: 658-56 PLASTIC PIPES **OR**
NIGP CODE: 658-60 PVC PIPES

DESCRIPTION	DR 18 PRICE		DR 25 PRICE		DR 32.5 PRICE		DR 41 PRICE		DR 51 PRICE	
14"	$27.89	LF	$20.53	LF	$15.79	LF	$13.16	LF	NO BID	LF
16"	$ 36.32	LF	$26.32	LF	$20.53	LF	$18.42	LF	NO BID	LF
18"	$45.79	LF	$33.35	LF	$25.79	LF	$23.16	LF	NO BID	LF
24"	$80.32	LF	$58.95	LF	$45.26	LF	$41.05	LF	NO BID	LF
30"	$131.58	LF	$91.58	LF	$70.53	LF	$65.26	LF	$60.00	LF
36"	NO BID	LF	$131.58	LF	$102.11	LF	$91.58	LF	$82.11	LF
42"	NO BID	LF	$236.84	LF	$138.95	LF	$123.16	LF	$100.00	LF
48"	NO BID	LF	$315.79	LF	$247.37	LF	$230.53	LF	$198.95	LF

SDR 26 AND SDR 35 GASKETED GRAVITY SANITARY SEWER PIPE

NIGP CODE: 210-35
SEWER PIPE JOINT SEALING COMPOUND

SIZE OF PIPE	SDR 26		SDR 35	
4"	$1.17	LF	$.87	LF
6"	$2.51	LF	$1.89	LF
8"	$4.52	LF	$3.39	LF
10"	$7.08	LF	$5.32	LF
12"	$10.09	LF	$7.63	LF
15"	$15.34	LF	$11.36	LF

OPENED 9:54 4-5-17

HIGH PERFORMANCE (HP) POLYPROPYLENE STORM PIPE

Witnessed

DESCRIPTION	PRICE	
12"	$7.26	LF
15"	$9.07	LF
18"	$11.96	LF
24"	$20.18	LF
30"	$31.39	LF
36"	$36.34	LF
42"	$46.64	LF
48"	$61.16	LF
60"	$95.86	LF

HIGH DESTINY POLYETHYLENE PIPE (HDPE) NIGP CODE: 658-58 Polyethylene Pipe And Fitting		
DESCRIPTION	PRICE	
4"	$0.93	LF
6"	$2.32	LF
8"	$3.84	LF
10"	$5.40	LF
12"	$5.58	LF
15"	$8.54	LF
18"	$11.60	LF
24"	$18.00	LF
30"	$27.75	LF
36"	$34.91	LF
42"	$48.57	LF
48"	$53.86	LF
54"	NO BID	LF
60"	$93.13	LF

PLUMBING PIPES – 20 FOOT SECTIONS NIGP CODE: 967-60	
PVC	PRICE
½"	$0.40
1 ½"	$0.75
2"	$0.95
3"	$1.50
4"	$2.25

OPENED
9:54
4-5-17
Witnessed

PLUMBING PIPES – 20 FOOT SECTIONS NIGP CODE: 967-60	
COPPER	PRICE
½"	NO BID
¾"	NO BID

CATEGORY (B) – INLETS

NIGP CODE: 210-31

INLETS, AREA, SEWER DRAIN, PRECAST, CONCRETE, STORM DRAIN, **NO BOTTOM FLOORS**

DESCRIPTION	PRICE																
	2'	2 ½'	3'	3 ½'	4'	4 ½'	5'	5 ½'	6'	6 ½'	7'	7 ½'	8'	8 ½'	9'	9 ½'	10'
Type "A" Inlet (5' x 3')																	
Type "A-1" Inlet (5' x 4')																	
Type "A-2" Inlet (5' x 5')																	
Type "A-3" Inlet (5' x 6')																	
Type "A" (SPL-1) Inlet (5' x 3')																	
Type "A-1" (SPL-1) Inlet (5' x 4')																	
Type "A-2" (SPL-1) Inlet (5' x 5')	3,538.68	$3,538.68	$3,538.68	$3,538.68	$3,538.68	$3,538.68	$3,538.68	$3,628.61	$3,718.54	$3,808.46	$3,898.39	$3,988.32	$4,078.24	$4,168.17	$4,258.09	$4,348.02	4437.95
Type "A-3" (SPL-1) Inlet (5' x 6')																	
TYPE "C" INLET 2' X 2'	$442.89	$484.51	$526.12	$567.73	$609.34	$650.95	$692.56	$734.17	$775.78	$817.39	$859.00	$900.61	$942.22	$983.83	$1,025.44	$1,067.05	1108.66
TYPE "C" INLET 3' X 3'	1,043.26	$1,043.26	$1,043.26	$1,098.74	$1,154.21	$1,209.68	$1,265.16	$1,320.63	$1,376.11	$1,431.58	$1,487.05	$1,542.53	$1,598.00	$1,653.47	$1,708.95	$1,765.42	1819.89
TYPE "C" INLET 4' X 4'	1,690.16	$1,690.16	$1,690.16	$1,690.16	$1,690.16	$1,690.16	$1,764.42	$1,838.68	$1,987.21	$2,061.47	$2,135.74	$2,210.00	$2,284.26	$2,358.53	$2,432.79	$2,507.05	2581.32
TYPE "CC" INLET 5' x 3'	1082.63	$1,082.63	$1,082.63	$1,082.63	$1,082.63	$1,175.26	$1,266.95	$1,359.11	$1,451.26	$1,543.42	$1,635.58	$1,727.74	$1,819.89	$1,912.05	$2,004.21	$2,096.37	2188.53

OPENED 9:54 4-5-17 Witnessed

Type "F" Inlet (W=3')																	
Type "F-1" Inlet (W=4')																	
Type "F-2" Inlet (W=5')																	
Type "F-3" Inlet (W=6')																	
Type "F" (SPL-1) Inlet (W=3')																	
Type "F-1" (SPL-1) Inlet (W=4')																	
Type "F-2" (SPL-1) Inlet (W=5')																	
Type "F-3" (SPL-1) Inlet (W=6')																	

OPENED 9:54 4-5-17 Witnessed

CATEGORY (C) – MANHOLES, NO BOTTOM FLOORS

NIGP CODE: 890-30

MANHOLES

DESCRIPTION	PRICE														
	3'	3 ½'	4'	4 ½'	5'	5 ½'	6'	6 ½'	7'	7 ½'	8'	8 ½'	9'	9 ½'	10'
TYPE "A" MANHOLE	$845.20	$845.20	$886.06	$926.78	$967.49	$1,008.21	$1,048.93	$1,089.64	$1,130.36	$1,171.07	$1,211.79	$1,252.51	$1,293.22	$1,333.94	$1,374.65
TYPE "A-1" MANHOLE															
TYPE "M" MANHOLE															

CATEGORY (D) – MISCELLANEOUS

DESCRIPTION		
WATER VALVE	UNIT	PRICE
2"	EA	$295.00
4"	EA	$576.00
6"	EA	$770.00
8"	EA	$995.00
10"	EA	$1,440.00
90 DEGREE ELBOW		
2"	EA	$92.10
4"	EA	$140.00
6"	EA	$160.00
8"	EA	$270.00
10"	EA	$350.00
45 DEGREE ELBOW		
2"	EA	$105.10
4"	EA	$147.50
6"	EA	$160.00
8"	EA	$270.00
10"	EA	$350.00
STEEL PIPE CASING WITH SPACERS		
4"	LF	$61.11
6"	LF	$83.85
12"	LF	$98.57
16"	LF	$128.66
24"	LF	$190.20
FIRE HYDRANT W/VALVE	EA	$2,495.00
PVC SCHEDULE 40 WATER LINE DR 18		
2"	LF	$.85
8"	LF	$7.40
PVC SCHEDULE 40		
1.5"	LF	$.65
0.75"	LF	$.45
0.5"	LF	NO BID
WATER SADDLE W/2' CORPORATE VALVE		
8" x 2"	EA	$470.00

OPENED
9:54
4-5-17
Witnessed

EXHIBIT "B" – BID PAGE
Hidalgo County (All funding sources, programs & entities)
"PIPES & Related Miscellaneous Items"
RFB No.: 2017-046-04-05-FAZ

HP Dual Wall Marmac Couplers		
PIPE SIZE	PRICE	UNIT
12"	$46.00	EA
15"	$52.11	EA
18"	$64.11	EA
24"	$82.94	EA
30"	$101.23	EA
36"	$118.45	EA
42"	$131.90	EA
48"	$145.97	EA
60"	$239.61	EA

HP Dual Wall Fabricated Tees		
PIPE SIZE	PRICE	UNIT
12"	$174.29	EA
15"	$260.51	EA
18"	$365.44	EA
24"	$565.01	EA
30"	$1,378.23	EA
36"	$1,553.81	EA
42"	$2,048.08	EA
48"	$2,075.20	EA
60"	$4,503.24	EA

OPENED
9:54
4-5-17
Witnessed

HP Dual Wall Fabricated Bends						
PIPE SIZE	11.25 Bend	22.5 Bend	30* Bend	45* Bend	90* Bend	Unit
12"	$74.79	$74.79	$83.60	$103.01	$90.72	EA
15"	$103.75	$115.95	$125.82	$120.92	$163.99	EA
18"	$157.75	$157.75	$173.04	$189.33	$230.06	EA
24"	$336.92	$342.40	$363.22	$386.66	$454.91	EA
30"	$466.36	$528.73	$608.96	$602.14	$775.68	EA
36"	$658.41	$753.63	$854.81	$816.65	$988.46	EA
42"	$830.24	$996.79	$1,030.03	$1,058.05	$1,271.88	EA
48"	$1,017.08	$1,247.73	$1,291.33	$1,316.46	$1,385.39	EA
60"	$1,512.47	$2,006.56	$1,960.08	$2,222.88	$2,571.40	EA

EXHIBIT "B" – BID PAGE
Hidalgo County (All funding sources, programs & entities)
"PIPES & Related Miscellaneous Items"
RFB No.: 2017-046-04-05-FAZ

BIDDER/COMPANY NAME: HD Supply Waterworks, Ltd.

ADDRESS: 100 N. 1st Street

CITY: McAllen STATE: Texas ZIPCODE: 78502

PHONE No: 956-631-3341 FAX No: 956-687-5918 CELL № 956-227-0502

AUTHORIZED SIGNATURE:

PRINTED NAME: Joel Garcia

TITLE: District Manager DATE: April 4, 2017

EMAIL: joel.garcia@hdsupply.com

EXHIBIT “C”

CERTIFICATE OF INSURANCE

CERTIFICATE OF LIABILITY INSURANCE

DATE(MM/DD/YYYY) 08/01/2016

THIS CERTIFICATE IS ISSUED AS A MATTER OF INFORMATION ONLY AND CONFERS NO RIGHTS UPON THE CERTIFICATE HOLDER. THIS CERTIFICATE DOES NOT AFFIRMATIVELY OR NEGATIVELY AMEND, EXTEND OR ALTER THE COVERAGE AFFORDED BY THE POLICIES BELOW. THIS CERTIFICATE OF INSURANCE DOES NOT CONSTITUTE A CONTRACT BETWEEN THE ISSUING INSURER(S), AUTHORIZED REPRESENTATIVE OR PRODUCER, AND THE CERTIFICATE HOLDER.

IMPORTANT: If the certificate holder is an ADDITIONAL INSURED, the policy(ies) must have ADDITIONAL INSURED provisions or be endorsed. If SUBROGATION IS WAIVED, subject to the terms and conditions of the policy, certain policies may require an endorsement. A statement on this certificate does not confer rights to the certificate holder in lieu of such endorsement(s).

Holder Identifier :

PRODUCER	CONTACT NAME:	
Aon Risk Services Northeast, Inc. New York NY Office 199 Water Street New York NY 10038-3551 USA	PHONE (A/C. No. Ext): (866) 283-7122	FAX (A/C. No.): (800) 363-0105
	E-MAIL ADDRESS:	

RECEIVED AUG 08 2016

INSURED	INSURER(S) AFFORDING COVERAGE		NAIC #
HD Supply, Inc. and its subsidiaries Cumberland Center II 3100 Cumberland Blvd Atlanta GA 30339 USA	INSURER A:	National Union Fire Ins Co of Pittsburgh	19445
	INSURER B:	New Hampshire Ins Co	23841
	INSURER C:	American Home Assurance Co.	19380
	INSURER D:	Illinois National Insurance Co	23817
	INSURER E:		
	INSURER F:		

COVERAGES **CERTIFICATE NUMBER:** 570063267478 **REVISION NUMBER:**

THIS IS TO CERTIFY THAT THE POLICIES OF INSURANCE LISTED BELOW HAVE BEEN ISSUED TO THE INSURED NAMED ABOVE FOR THE POLICY PERIOD INDICATED. NOTWITHSTANDING ANY REQUIREMENT, TERM OR CONDITION OF ANY CONTRACT OR OTHER DOCUMENT WITH RESPECT TO WHICH THIS CERTIFICATE MAY BE ISSUED OR MAY PERTAIN, THE INSURANCE AFFORDED BY THE POLICIES DESCRIBED HEREIN IS SUBJECT TO ALL THE TERMS, EXCLUSIONS AND CONDITIONS OF SUCH POLICIES. LIMITS SHOWN MAY HAVE BEEN REDUCED BY PAID CLAIMS. **Limits shown are as requested**

INSR LTR	TYPE OF INSURANCE	ADDL INSD	SUBR WVD	POLICY NUMBER	POLICY EFF (MM/DD/YYYY)	POLICY EXP (MM/DD/YYYY)	LIMITS	
A	X COMMERCIAL GENERAL LIABILITY			GL3796702	08/30/2016	08/30/2017	EACH OCCURRENCE	$2,000,000
	[ ] CLAIMS-MADE [X] OCCUR						DAMAGE TO RENTED PREMISES (Ea occurrence)	$1,000,000
							MED EXP (Any one person)	$5,000
							PERSONAL & ADV INJURY	$2,000,000
	GEN'L AGGREGATE LIMIT APPLIES PER:						GENERAL AGGREGATE	$5,000,000
	X POLICY [ ] PRO-JECT [ ] LOC						PRODUCTS - COMP/OP AGG	$4,000,000
	OTHER:							
A	AUTOMOBILE LIABILITY			CA 2935911 AOS	08/30/2016	08/30/2017	COMBINED SINGLE LIMIT (Ea accident)	$5,000,000
A	X ANY AUTO			CA 2935910 MA	08/30/2016	08/30/2017	BODILY INJURY (Per person)	
A	[ ] OWNED AUTOS ONLY [ ] SCHEDULED AUTOS [ ] HIRED AUTOS ONLY [ ] NON-OWNED AUTOS ONLY			CA 2935912 VA	08/30/2016	08/30/2017	BODILY INJURY (Per accident)	
							PROPERTY DAMAGE (Per accident)	
	[ ] UMBRELLA LIAB [ ] OCCUR						EACH OCCURRENCE	
	[ ] EXCESS LIAB [ ] CLAIMS-MADE						AGGREGATE	
	[ ] DED [ ] RETENTION							
B	WORKERS COMPENSATION AND EMPLOYERS' LIABILITY			WC014111982 AOS	08/30/2016	08/30/2017	X PER STATUTE [ ] OTH-ER	
B	ANY PROPRIETOR / PARTNER / EXECUTIVE OFFICER/MEMBER EXCLUDED? (Mandatory in NH) Y / N [N]	N/A		WC014111985 AK, AZ, VA	08/30/2016	08/30/2017	E.L. EACH ACCIDENT	$1,000,000
	If yes, describe under DESCRIPTION OF OPERATIONS below						E.L. DISEASE-EA EMPLOYEE	$1,000,000
							E.L. DISEASE-POLICY LIMIT	$1,000,000

Certificate No : 570063267478

DESCRIPTION OF OPERATIONS / LOCATIONS / VEHICLES (ACORD 101, Additional Remarks Schedule, may be attached if more space is required)

RE: PIPES - (REINFORCED POLYETHYLENE PIPE, CORRUGATES PVC AND STEEL STORM SEWER PIPES, PLUMBING PIPES, AND ADDITIONAL MISCELLANEOUS ITEMS) - BID NO. 2013-064-02-27-YZV. HIDALGO COUNTY IS INCLUDED AS ADDITIONAL INSURED IN ACCORDANCE WITH THE POLICY PROVISIONS OF THE GENERAL LIABILITY POLICY. HD SUPPLY INC.

CERTIFICATE HOLDER

HIDALGO COUNTY
Attn: PURCHASING DEPARTMENT
2812 S BUSINESS HWY 281
EDINBURG TX 78539 USA

CANCELLATION

SHOULD ANY OF THE ABOVE DESCRIBED POLICIES BE CANCELLED BEFORE THE EXPIRATION DATE THEREOF, NOTICE WILL BE DELIVERED IN ACCORDANCE WITH THE POLICY PROVISIONS.

AUTHORIZED REPRESENTATIVE

Aon Risk Services Northeast, Inc.

©1988-2015 ACORD CORPORATION. All rights reserved.

The ACORD name and logo are registered marks of ACORD

Zimbra **rocio.villarreal@co.hidalgo.tx.us**

RE: C-17-046A-06-13-HD Supply

From : Steve Crain <scrain@atlashall.com> Mon, May 29, 2017 05:14 PM
Subject : RE: C-17-046A-06-13-HD Supply
To : 'Rocio Villarreal' <rocio.villarreal@co.hidalgo.tx.us>

The HD Supply contract is OK.

From: Rocio Villarreal [mailto:rocio.villarreal@co.hidalgo.tx.us]
Sent: Friday, May 26, 2017 1:40 PM
To: Steve Crain <scrain@atlashall.com>
Subject: C-17-046A-06-13-HD Supply

Mr. Crain:

Please review and approve to form.

Thank you.

ROCIO VILLARREAL
HIDALGO COUNTY PURCHASING DEPT.
CONTRACTS MANAGER
(956) 318-2626 Work
(956) 292-7000 Ext. 4868 Work
rocio.villarreal@co.hidalgo.tx.us
2812 S. Business Hwy 281
Edinburg, Texas 78539

REQUIREMENTS AGREEMENT
C-17-046B-05-30

THIS AGREEMENT (the "Agreement") is entered into effective as of the 30th day of May, 2017 by and between ACT Pipe & Supply, Inc. ("Seller") and Hidalgo County, Texas ("Buyer").

WHEREAS, Buyer has solicited sealed bids for the supply of its requirements of **Hidalgo County** for the **"Pipes and Misc. Items,"** (the "Product") for **HIDALGO COUNTY**, as further described in Exhibit "A", Request for Bids (RFB) Procurement Packet as attached hereto and incorporated herein by reference for all purposes (the "RFB") for a period of **one (1) year** and;

WHEREAS, Seller has submitted a proposal to supply Buyer's requirements; and

WHEREAS, Buyer has determine that Seller has submitted the lowest and best bid to meet Buyer's requirements for certain of the Products, as herein after described.

NOW THEREFORE, for and in consideration of the mutual covenants and conditions hereinafter set forth, and other good and valuable consideration, the receipt and sufficiency of which is hereby acknowledged, the parties hereto agree as follows:

1. Buyer agrees to purchase from Seller, and Seller agrees to sell and deliver to Buyer, all of the Products listed on Exhibit "B", which is attached hereto and incorporated herein by reference, that Buyer may require for use by Buyer in Hidalgo County projects for a period of a **one (1) year** with the County's option to extend/renew for an additional one (1) year period under the same rates, terms and conditions. Hidalgo County reserves the right to continue this bid for an additional sixty (60) day grace period, under the same rates, terms and conditions at the end of the contract term for unforeseen delays in award of new bid for the next contract term. This Contract shall commence on **June 30, 2017** and expire on **June 29, 2018** and it is agreed that the Products will meet the Specifications in the Request for Bids (RFB) Procurement Packet set forth in Exhibit "A" hereto.

2. When Buyer determines that it needs a quantity of the Products to be delivered, it will, according to its Purchasing Policies, complete and submit to Seller a Purchase Order describing the type and quantity of the Products required. The Products are to be delivered by Seller to the location in Hidalgo County specified by Buyer in its Purchase Order.

3. Buyer agrees to pay Seller for each Purchase Order based on the prices set out in Exhibit "B". Seller shall render invoices for each Purchase Order, and the invoices shall be paid by Buyer on or before the 30th day following receipt of the invoice.

4. General Provisions.

a. **Conflict with Applicable Law.** Nothing in this Agreement shall be

construed so as to require the commission of any act contrary to law, and whenever there is any conflict between any provision of this Agreement and any present or future law, ordinance or administrative, executive or judicial regulation, order or decree, or amendment thereof, contrary to which the parties have no legal right to contract, the latter shall prevail, but in such event the affected provision or provisions of this Agreement shall be modified only to the extent necessary to bring them within the legal requirements and only during the time such conflict exists.

b. **No Waiver.** No waiver by Buyer of any breach of any provision of this Agreement shall be deemed to be a waiver of any preceding or succeeding breach of the same or any other provision hereof.

c. **Entire Agreement.** This Agreement contains the entire contract between the parties hereto, and each party acknowledges that neither has made (either directly or through any agent or representative) any representations or agreements in connection with this Agreement not specifically set forth herein. This Agreement may be modified or amended only by agreement in writing executed by Buyer and Seller, and not otherwise.

d. **Texas Law to Apply.** This Agreement shall be construed under and in accordance with the laws of the State of Texas, and all obligations of the parties created hereunder are performable in Hidalgo County, Texas. The parties hereby consent to personal jurisdiction in Hidalgo County, Texas.

e. **Notice.** Except as may be otherwise specifically provided in this Agreement, all notices, demands, requests or communications required or permitted hereunder shall be in writing and shall either be (i) personally delivered against a written receipt, or (ii) sent by registered or certified mail, return receipt requested, postage prepaid and addressed to the parties at the addresses set forth below, or at such other addresses as may have been theretofore specified by written notice delivered in accordance herewith:

If to Buyer:	Hidalgo County Attention: County Judge 1615 South Closner, Suite J Edinburg, Texas 78539
If to Seller:	ACT Pipe & Supply, Inc. Attention: Jorge Zavala, Operation Manager 1004 N. Shary Rd Mission, Texas 78572

Each notice, demand, request or communication which shall be delivered or mailed in the manner described above shall be deemed sufficiently given for all purposes at such time as it is personally delivered to the addressee or, if mailed, at such time as it is deposited in the Unites States mail.

f. **Termination.** Buyer may terminate this Agreement at any time for any reason or no reason at all upon giving thirty (30) days written notice.

g. **Additional Documents.** The parties hereto covenant and agree that they will execute such other and further instruments and documents as are or may become necessary or convenient to effectuate and carry out the terms of this Agreement.

h. **Successors.** This Agreement shall be binding upon and inure to the benefit of the parties hereto and their respective heirs, executors, administrators, legal representatives, successors, and assigns where permitted by this Agreement.

i. **Assignment.** This Agreement shall not be assignable.

j. **Headings.** The headings and captions contained in this Agreement are solely for convenient reference and shall not be deemed to affect the meaning or interpretation of any provision or paragraph hereof.

k. **Gender and Number.** All pronouns used in this Agreement shall include the other gender, whether used in the masculine, feminine or neuter gender, and the singular shall include the plural whenever and as often as may be appropriate

l. **Authority to Execute.** The execution and performance of this Agreement by Buyer and Seller have been duly authorized by all necessary laws, resolutions or corporate action, and this Agreement constitutes the valid and enforceable obligations of Buyer and Seller in accordance with its terms.

m. **Insurance.** Seller shall provide, to the extend it deems necessary, insurance in force on all persons connected with providing services under this Contract naming Buyer as an additional insured, and shall furnish to Buyer certificates of such insurance coverage Exhibit "C", which is attached hereto.

n. **Commitment of Current Revenues Only**. In the event that, during any term hereof, the Commissioners Court of Buyer does not appropriate sufficient funds to meet the obligations of Buyer under this Agreement, Buyer may terminate this Agreement upon ninety (90) days written notice to Seller. Buyer agrees, however, to use reasonable efforts to secure funds necessary for the continued performance of this Agreement. The parties intend this provision to be a continuing right to terminate this Agreement at the expiration of each budget period of Buyer pursuant to the provisions of Tex. Loc. Govt. Code Ann. ' 271.903 (Vernon Supp. 1996).

o. **Purchasing Ethics**. Seller represents and warrants it has not, during the process of being awarded this contract violated the following ethical standards of Buyer and, upon and

after the execution of this Agreement, agrees to abide by the following ethical standards of Buyer:

(1) It shall be a breach of ethics to offer, give or agree to give any elected official, department head or employee, or former elected official, department head or employee, of Hidalgo County, or for any elected official, department head or employee or former elected official, department head or employee of Hidalgo County, to solicit, demand, accept or agree to accept from another person, entity or organization, a gratuity or an officer of employment in connection with any decision, approval, disapproval, recommendation, preparation or any part of a program requirement or purchase request, influencing the content of any specification or procurement standard, rendering of advise, investigation, auditing, or in any other advisory capacity in any proceeding or application, request for ruling, determination, claim or controversy, or other particular matter pertaining to any program requirement or a contract or subcontract, or to any solicitation or proposal therefore pending before any department or agency of Hidalgo County.

(2) It shall be a breach of ethics for any payment, gratuity or offer of employment to be made by or on behalf of a subcontractor under a contract to the prime contractor or higher tier subcontractor for any contract for Hidalgo County, or any person associated therewith, as an inducement for the award of a subcontract or order.

p. **Immunities.** Nothing in this Agreement is intended to and Buyer does not hereby waive, release or relinquish any right to assert any of the defenses Buyer enjoys by virtue of the state or federal constitution, laws, rules or regulations, and any soverign, official or qualified immunity available to Buyer as to any claim or action of any person, entity, or individual against Buyer.

EXECUTED effective as of the day and year first above written.

APPROVED AS TO FORM:
Atlas, Hall & Rodriguez, LLP

By: _____
Stephen L. Crain

COUNTY OF HIDALGO

By:_____
Ramon Garcia, County Judge

ATTEST:

_____
Arturo Guajardo Jr., County Clerk

ACT Pipe & Supply, Inc.

By:_____
Printed Name: _____
Title: _____

EXHIBIT “A”

REQUEST FOR SEALED BIDS (RFB) PROCUREMENT PACKET

Hidalgo County Purchasing Office
2812 S. Business Highway 281
Administration Building
Edinburg, Texas 78539
(956) 318-2626 / Fax: (956) 292-7612

March 20, 2017

Bidder's name

Address

City

State, Zip Code

Re: **HIDALGO COUNTY (All funding sources, programs & entities)**
Request for Bids - **"Pipes & Related Miscellaneous Items"**
RFB Bid No.: 2017-046-04-05-FAZ

Dear Gentleman/Ladies:

Enclosed, please find the Request for Bids (RFB) packet. **Modifications and new requirements** have been added and implemented. Carefully read and review all instructions, Requirements and Specifications.

Hidalgo County Purchasing Department welcomes and appreciates your participation in the Request for Bids process.

If any further assistance is required, please do not hesitate to call the Purchasing Department (956) 318-2626 x 4854.

Sincerely,

Martha L. Salazar, CPPB
Hidalgo County Purchasing Agent

MLS/faz
Enclosures

HIDALGO COUNTY PURCHASING OFFICE
2812 S. Business Highway 281
Administration Building
Edinburg, Texas 78539
(956) 318-2626 / Fax: (956) 292-7612

TABLE OF CONTENTS
REQUEST FOR BIDS (RFB)
HIDALGO COUNTY (All funding sources, programs & entities)
"Pipes & Related Miscellaneous Items"
RFB No.: 2017-046-04-05-FAZ

ITEM	DESCRIPTION	No. OF PAGES
1.	Request For Bid Letter	1
2.	Request for Bid, Legal Notice	8
3.	Exhibit A, Specifications	15
4.	Exhibit B, Bid Page	9
5.	Exhibit C, Insurance Requirements	4
6.	Exhibit D, (CIQ) Conflict of Interest Questionnaire (if applicable)	2
7.	Exhibit E, Vendor/Bidder Application and W-9 form(s)	6
8.	Exhibit F, Certification Regarding Debarment	1
9.	Exhibit G, Title VI Appendices "A" through "E"	6
10.	Draft Contract	8
11.	RFB Submittal Checklist	1

The above mentioned items shall be found in this Request for Bids-Goods/Products-RFB packet that is attached herewith. Should you find that any of the listed items are not attached in its entirety, please contact Purchasing by calling (956) 318-2626 or e-mail, to advise us of the missing documentation, and Purchasing will forward information either through facsimile, e-mail or by U.S. Mail.

Thank you.

Martha L Salazar
Martha L. Salazar, CPPB, Purchasing Agent

3-10-
Date

Revised 09/13/16

LEGAL NOTICE

REQUEST FOR BIDS

Hidalgo County

(All funding sources, programs & entities)

"Pipes & Related Miscellaneous Items"

RFB No.: 2017-046-04-05-FAZ

REQUEST FOR BIDS

HIDALGO COUNTY (All funding sources, programs & entities)

"Pipes & Related Miscellaneous Items"

BID OPENING DATE

APRIL 5, 2017

Contact Person:

Martha L. Salazar, CPPB, Purchasing Agent
Hidalgo County Purchasing Department
Physical Address: 2802 S. Business Hwy. 281 - Administration Building
Mailing/Postal Address: 2812 S. Business Hwy. 281
Edinburg, Texas 78539
(956) 318-2626

Form HCPD-03

1. Sealed bids will be received for **"HIDALGO COUNTY (All funding sources, programs & entities) - "*Pipes & Related Miscellaneous Items*"** in accordance with the specifications attached as **Exhibit "A"** hereto. Bids should address all specifications set forth. Bidders may suggest substitutions of features which they feel would be in the best interest of Hidalgo County ("County"). Strong rationale must be presented for any deviation from the specifications. Hidalgo County reserves the right to reject the deviation and its effect on the overall bid.

2. **One (1) original and Three (3) copies** of all bids are required with the bidders name and return address clearly typed and or/printed on upper left hand corner and the proper notation clearly typed/printed on the lower left hand corner of the envelope and/or package: **BID No.: 2017-046-04-05-FAZ "HIDALGO COUNTY (All funding sources, programs & entities) - *Pipes & Related Miscellaneous Items*"** and at County's Purchasing Department with a physical address: 2802 S. Business 281 and a mailing address: 2812 S. Business Hwy 281, Administration Building, Edinburg, Texas, **on or before 9:30 A.M, WEDNESDAY, APRIL 5, 2017. NO FACSIMILES, EMAILS OR LATE ARRIVALS WILL BE ACCEPTED. ANY RFB RECEIVED AFTER THAT TIME WILL NOT BE OPENED AND WILL BE RETURNED. OVERNIGHT MAIL MUST ALSO BE PROPERLY LABELED ON THE OUTSIDE OF EXPRESS ENVELOPE OR PACKAGE WITH REFERENCE TO** RFB No.: **2017-046-04-05-FAZ "HIDALGO COUNTY (All funding sources, programs & entities) - *Pipes & Related Miscellaneous Items*"** Hidalgo County reserves the right to refuse and reject any/all bids and to waive any/all formalities or technicalities, or to accept the bids considered the best and most advantageous to Hidalgo County.

   Additionally, all forms listed below must be properly executed and included with your bid:

   1. Legal Notice (See page 8);
   2. Bid Page – Procurement Form – Areas of Specialization (See **Exhibit "B"**);
   3. Insurance pages with Acknowledgment Forms (See **Exhibit "C"**);
   4. Form CIQ-Conflict of Interest Questionnaire (See **Exhibit "D"**);
   5. Vendor Bidder Application & W-9 forms (See **Exhibit "E"**);
   6. Certification Regarding Debarment (See **Exhibit "F"**); and
   7. SAMS.gov Registration Acknowledgement (See Number 18 below).

3. Hidalgo County reserves the right to: A. separate and accept, or eliminate any item(s) listed under this bid that it deems necessary to accommodate budgetary and/or operational requirements; B. reject any or all bids submitted and further reserves the right to design the evaluation criteria to be used in selecting the lowest and best bid for approval; C. award the bid to one bidder or to multiple bidders if the County determines it is in its best interest to do so; D. award the contract to the responsible bidder who submits the lowest and best bid. "Lowest and best" means a bid or offer providing the best value considering associated direct and indirect costs, including transport, maintenance, reliability, and life cycle, warranties, and customer service after a sale.

4. The Bidder shall not substitute items named in the bid without the express written consent of Hidalgo County. Failure of the delivered item to perform as specified or failure to meet the stated delivery schedule shall release Hidalgo County from all obligations to the contracting party with regard to the item(s) in question. In such event, County may elect to award the contract to the next-lowest responsible bidder, or to reject all bids and re-advertise.

5. For work to be performed at a County owned or operated location, each bidder shall, in its sole discretion, visit the job site before preparing the bid and thoroughly familiarize himself/herself with existing conditions. Bidder should take field dimensions and note all circumstances which affect the dollar amount of the bid.

6. Descriptive specifications are referenced in this document to indicate the general kind and quality of equipment desired by Hidalgo County. Due to various styles and models of equipment, bidders are required to include illustrations, specifications, explanation of warranties, and service data with their bid including catalogue numbers and any necessary references.

7. No bid may be withdrawn within thirty (30) days from the scheduled time to open bids.

8. Proposed prices are to remain firm for a minimum of ninety (90) days after bid opening.

9. Any interpretations, amendments, corrections or changes to this bid document must be in a written addendum and signed by the County Judge or his designee. Addenda will be mailed to all who are known to have received a copy of the Request for Bids. Bidders shall acknowledge receipt of all addenda as a part of their bid.

10. County reserves the right to accept or reject any or all Bids.

11. Costs are to be net F.O.B., County Prepaid.

12. County is exempt from Federal Excise Tax, State Tax and Local Tax. Do Not include tax in cost figure. If it is determined that tax was included in the cost figures it will not be included in the tabulation of any awards. Tax exemption certificates will be furnished upon request.

13. Funds for this procurement have been provided through the County budget for this fiscal year only. County, on an annual basis, has the right to reconsider a contract during the budget process for ensuing years if financial resources of County are insufficient to meet the liabilities of said contract. The award of a bid or contract hereunder will not be construed to create a debt of the County which is payable out of funds beyond the current fiscal year.

14. Upon award and prior to execution of a contract, Sole Proprietorships are required to submit a copy of their social security cards to the Hidalgo County Auditor's Office in order to establish an account with the County. All awarded vendors must submit a completed W-9 and a copy of their Federal ID Number Certificate.

15. DELIVERY INSTRUCTIONS:
    - No deliveries accepted after 3:00 P.M., Monday-Friday.
    - At least seventy two (72) hours prior notice of delivery must be given to Martha L. Salazar, Purchasing Agent before delivery will be accepted.
    - If you need additional information call the office listed below:

      Hidalgo County Purchasing Department
      Martha L. Salazar, Purchasing Agent
      (956) 318-2626

16. BILLING AND PAYMENT INSTRUCTIONS:
    - Invoices must include:
      a) Name and address of successful bidder
      b) Name and address of receiving department or official
      c) Purchase Order Number (if any)
      d) Notation - "HIDALGO COUNTY (All funding sources, programs & entities) -RFB No.: 2017-046-04-05-FAZ "*Pipes & Related Miscellaneous Items*"

Descriptive information as to the items or services delivered, including product code, item number, quantity, etc.

e) Contract number must be indicated on all invoices

- Discount payments will be considered when offered.
- Contact person for Billing and Payment questions:

Hidalgo County Auditor's Office
2808 S. Business Hwy 281
Edinburg, TX 78539
(956) 318-2511

17. SCHEDULE OF EVENTS

Bid Opening, 9:30 A.M.	**APRIL 5, 2017**
Award of Contract	**, 2017**
Commence Work or Deliver Products	**, 2017**

18. BID OR PERFORMANCE BOND AND DEBARMENT CERTIFICATION; PAYMENT UNDER CONTRACT:

. If the contract proposed is for the construction of public works or is for a contract for goods & services exceeding $100,000, all bidders shall furnish a good and sufficient bid bond in the amount of five percent of the total contract price. A bid bond must be executed with a surety company authorized to do business in Texas. All bidders are also required to furnish a certification or acknowledgment stating that the contractor or vendor is free from suspension or debarment pursuant to federal regulation 45CFR Part 76. Register at SAMs System for Award Management @ www.sam.gov.

. Together with the signing of a contract or issuance of a purchase order following the acceptance of a bid, and prior to commencement of the actual work, the bidder shall furnish a performance bond to the County for the full amount of the contract, if that contract exceeds $50,000.

. If the contract is for $50,000 or less, no money will be paid to the contractor until completion and acceptance of the work or the fulfillment of the purchase obligation to the County, and, if applicable, the receipt by County of satisfactory evidence that all subcontractors and material men have been paid.

. If a contract is for the construction, alteration or repair of public buildings or public works, the contractor *shall* provide a payment bond for a contract in excess of Twenty Five Thousand Dollars ($25,000.00), as required by Tex. Govt. Code Ch. 2253.

For requirements contracts, bond requirements are determined by applying the proposed unit price to the estimated quantities included in the specifications.

19. TITLE VI NOTICE/ N ,DISCRIMATION

a. "The County of Hidalgo, in accordance with the provisions of Title VI of the Civil Rights Act of 1964 (78 Stat.252, 42 U.S.C. §§2000d to 2000d-4) and the Regulations, hereby notifies all bidders that it will affirmatively ensure that any contract entered into pursuant to this advertisement, disadvantaged business enterprises will be afforded full and fair opportunity to submit bids in response to this invitation and will not be discriminated against on the grounds of race, color, or national origin in consideration for an award."

b. The appropriate clauses of Appendices "A" through "E" as delineated in the USDOT Standard Title VI/Nondiscrimination Assurances - Specific Assurances are hereby incorporated by reference as applicable. Title VI Appendices "A" through "E" are attached as **Exhibit "G.**

c. Bidder will attach all applicable notices to which it is obligated to provide or submit as part of the bid, including Form FHWA 1273 to be submitted by all contractors and subcontractors in relation to construction contracts.

20. ETHICAL STANDARDS:

. It shall be a breach of ethics to offer, give or agree to give any elected official, department head or employee, or former elected official, department head or employee, of the County, or for any elected official, department head or employee or former elected official, department head or employee of the County, to solicit, demand, accept or agree to accept from another person, entity or organization, a gratuity or an offer of employment in connection with any decision, approval, disapproval, recommendation, preparation or any part of a program requirement or purchase request, influencing the content of any specification or procurement standard, rendering of advice, investigation, auditing, or in any other advisory capacity in any proceeding or application, request for ruling, determination, claim or controversy, or other particular matter pertaining to any program requirement or a contract or subcontract, or to any solicitation or proposal therefore pending before any department or agency of the County.

. It shall be a breach of ethics for any payment, gratuity or offer of employment to be made by or on behalf of a subcontractor under a contract to the prime contractor or higher tier subcontractor for any contract for the County, or any person associated therewith, as an inducement for the award of a subcontract or order.

. No public official shall have an interest in a contract awarded hereunder except in accordance with Tex. Loc. Govt. Code Chapter 171.

NOTICE:
ALL COMMUNICATIONS BY A VENDOR TO THE COUNTY, ITS OFFICIALS, AND DEPARTMENT HEADS REGARDING THIS PROCUREMENT SHALL BE DONE THROUGH THE HIDALGO COUNTY PURCHASING DEPARTMENT.

21. DISCLOSURE OF CONFLICT OF INTEREST

. Effective January 1, 2016, Chapter 176 of the Texas Local Government Code requires that any vendor, person, consultant or contractor considering doing business with Hidalgo County ("the County") to disclose in the Conflict of Interest Questionnaire (the "CIQ") attached as Exhibit E, the vendor, person, consultant or contractor's affiliation or business relationship that might cause a conflict of interest with the County. By law, the CIQ must be filed with the Hidalgo County Clerk's Office no later than the seventh business day after the date the person becomes aware of facts that require that statement to be filed. The disclosure requirement applies to a person or business who contracts or seeks to contract with Hidalgo County for the

sale or purchase of property, goods or service. Any purchase order or contract resulting from this process shall be considered null and void if the successful bidder fails to comply with Texas Local Government Code Chapter 176. Vendors, consultants, contractors and others who desire to conduct business with Hidalgo County are encouraged to refer to Texas Local Government Code Chapter 176 for the details of this law. An offense under Texas Local Government Code Chapter 176 is a Class C Misdemeanor.

Completed Form CIQ must be submitted to the Hidalgo County Clerk's Office located at 100 N. Closner, Edinburg, Texas 78539 - Hidalgo County Courthouse.

COMPLETION AND SUBMISSION OF FORM CIQ IS THE SOLE RESPONSIBILITY OF THE PROSPECTIVE RESPONDENT. QUESTIONS REGARDING COMPLIANCE SHOULD BE DIRECTED TO YOUR LEGAL COUNSEL.

22. CERTIFICATE OF INTERESTED PARTIES (FORM HB1295)

As of January 1, 2016, to comply with Texas Government Code Section §2252.908, and the rules issued by the Texas Ethics Commission found in Title 1, Section 46.1, 46.3 and 46.5 of the Texas Administrative Code, we have updated and revised our RFB packet. In accordance with these requirements, business must submit a completed Certificate of Interested Parties Form 1295 to the County before the County may enter into a contract with the business entity. In box 3 of Form 1295, you will provide the RFB Project No. (2017-046), as shown on the packet. Once completed and filed with the Texas Ethics Commission, Form 1295 must be printed and signed in the presence of a notary and submitted to our office either by facsimile transmission to (956) 292-7612 or via email to: matilde.faz@co.hidalgo.tx.us. Hidalgo County cannot enter into a contract until Form 1295 is submitted. Therefore, failure to timely submit Form 1295 signed and notarized may result in delay of award. Full instructions for completion and submittal of Form 1295 may be found on the Texas Ethics Commission website:

https://www.ethics.state.tx.us/tec/1295-Info.htm

THE AWARDED VENDOR WILL HAVE THIRTY (30) DAYS FROM THE DATE THE HIDALGO COUNTY COMMISSIONER'S COURT APPROVES THIS AGREEMENT TO SUBMIT THE SIGNED NOTARIZED FORM 1295. *HIDALGO COUNTY CANNOT ENTER INTO A CONTRACT UNTIL FORM 1295 IS SUBMITTED.*

23. If, during the life of any contract or bid awarded, the successful bidder's net prices generally available to other customers for items awarded herein are reduced below the contracted price, it is understood and agreed that the benefits of such reduction shall be extended to the County.

24. Bids, and all goods and services provided hereunder, shall comply with all federal, state and local laws concerning this type(s) of goods and/or services.

25. Minimum Standards for Responsible Prospective Bidders: A prospective bidder must affirmatively demonstrate bidder's responsibility. A prospective bidder, by submitting a bid, represents to County that it meets the following requirements:
    - Possess or is able to obtain adequate financial resources as required to perform under the bid;
    - Be able to comply with the required or proposed delivery schedule;
    - Have a satisfactory record of performance;
    - Have a satisfactory record of integrity and ethics;
    - Be otherwise qualified and eligible to receive an award.

26. Successful bidder will pay or cause to be paid, without cost or expenses to County, all FICA, FUTA/SUTA and Federal Income Withholding Taxes of all employees, and all wages and benefits as required by Federal or State law. Successful bidder's officers, agents and/or employees will not be entitled to any benefits of an employee or elected official of County, including, but not limited to, benefits associated with County's civil service system.

27. Any contract award to a successful bidder will be in effect until (a) the contract expires, (b) delivery and acceptance of products, and/or performance of services ordered, or (c) terminated by County with thirty day's written notice prior to cancellation.

28. County reserves the right to enforce performance of any contract awarded hereunder in any manner prescribed by law or deemed to be in the best interest of the County in the event of breach or default by successful bidder; County reserves the right to terminate any contract immediately in the event a successful bidder fails to:

    A. Meet schedules;
    B. Pay any required fees or taxes; or
    C. Otherwise perform in accordance with the specifications.

29. Successful bidder shall defend, indemnify and save harmless County and all its elected officials, officers, agents and employees from all suits, actions, or other claims of any character, name and description brought for or on account of any injuries or damages received or sustained by any person, persons, or property on account of any negligent act or fault of the successful bidder, or of any agent, employee, subcontractor or supplier of successful bidder in the execution of, or performance under, any contract which may result from bid award or which arises from any event or casualty happening on or within County premises themselves or happening upon or in any halls, elevators, entrances, stairways or approaches of or to such County facilities. Successful bidder shall pay any judgment with costs which may be obtained against county growing out of such injury or damages, and shall, upon request, provide a defense to County by counsel reasonably acceptable to County. Successful bidder's indemnity hereunder shall include, but is not limited to, claims relating to patent, copyright or trademark infringement, and the like, arising out of the goods and services provided by successful bidder.

30. Successful bidder shall warrant that all items/services shall conform to the specifications and/or all warranties provided under the Uniform Commercial Code and be free from all defects in material, workmanship and the like. Items supplied under a contract pursuant to this Request for Bids shall be subject to County's approval. Items found to be defective or not meeting specifications shall be replaced by successful bidder within two business days at no expense to County. Items not picked up within one (1) week after notification shall be deemed a donation to County and may be used or disposed of at County's discretion and without waiver of any other rights of County as to the item's nonconformity.

31. This document and any disputes arising hereunder shall be governed and construed according to the laws of the State of Texas, and will be performable exclusively in Hidalgo County, Texas.

32. The successful bidder shall not assign, sell, transfer or convey its rights under any awarded contract, in whole or in part, without the prior written consent of County.

LEGAL NOTICE

Bid

For

HIDALGO COUNTY (All funding sources, programs & entities)

"Pipes & Related Miscellaneous Items"

BID No.: 2017-046-04-05-FAZ

To: Martha L. Salazar, CPPB, Purchasing Agent
Physical Address: 2802 S. Business Hwy. 281 - Administration Building
Mailing/Postal Address: 2812 S. Business Hwy. 281
Edinburg, Texas 78539

In accordance with the Specifications, and subject to all laws and regulations of the United States and state and local laws, the undersigned bidder proposes and commits to furnish all labor, equipment, material, software and services as set forth in the documents hereinbefore mentioned. The undersigned bidder further agrees, upon acceptance of its bid, to execute a contract and/or Purchase Order issued by Hidalgo County for performing and completing the work described in the Specifications within the time stated and for the prices proposed in the documents attached hereto and made a part hereof.

Bidder acknowledges receipt of all of the pages of the documents referenced in the Invitation to Bid Checklist presented in connection with this procurement. Bidder understands that Hidalgo County reserves the right to reject any or all bids and further reserves the right to design the evaluation criteria to be used in selecting the lowest and best bid.

Bidder agrees that this bid shall be good and may not be withdrawn for a period of ninety (90) calendar days after the scheduled closing time for receiving bids, as contained in the Specifications.

Respectfully submitted,

Bidder: _____

Address: _____

By: _____

Printed Name: _____

Title: _____

EXHIBIT "A"

SPECIFICATIONS/REQUIREMENTS

REQUEST FOR BIDS

Hidalgo County

(All funding sources, programs & entities)

"Pipes & Related Miscellaneous Items"

RFB No.: 2017-046-04-05-FAZ

SPECIFICATIONS AND/OR REQUIREMENTS:

Bidder(s) shall supply, where needed (on an "as needed" basis) in Hidalgo County or job site, **"PIPES, Inlets, Manholes & Miscellaneous Items".**

Bid information will be furnished to all Hidalgo County departments requiring pipes and **delivery** will involve numerous locations within Hidalgo County.

I. LOCATIONS – Departments requiring pipes.

II. DELIVERY INSTRUCTIONS
Delivery hours will be arranged with each department requiring pipes. **Bidder(s) shall deliver** the amount of product requested to **location or job site** required within 24 hours, or earlier, if requested. Bidder(s) agree(s) that, to the extent an item is unavailable from bidder's own inventory; bidder(s) will be responsible for locating an alternative supplier and for providing the product to Hidalgo County for the bid price. **VENDOR(S) MUST UNLOAD ANY/ALL ITEMS LISTED AT THE REQUESTED SITE(S).**

III. BID AWARD

1. Hidalgo County may award the bid on a lump sum basis to one (1) bidder or to multiple bidders on an item by item basis in each category, whichever is in the best interest of the County. For evaluation and consideration of items bid, samples will be submitted upon request. Categories will be as follows:

   - Category A: Pipes
   - Category B: Inlets
   - Category C: Manholes
   - Category D: Miscellaneous

CATEGORY (A) – PIPES
CORRUGATED PVC STORM SEWER PIPE SPECIFICATION

1.0 SCOPE:
Polyvinyl chloride (PVC) storm sewer/drain pipe and fitting shall be manufactured and tested in accordance with AASHTO Specifications M304.

2.0 MATERIAL AND DESIGN
The structural design of thermoplastic pipes shall be in accordance with AASHTO Standard Specifications for Highway Bridge; Section 8 titled "Soil-Thermoplastic Pipe Interaction Systems". To ensure long-term design strength properties, PVC Pipe shall be manufactured from 12454B or 12454C cell class material per ASTM D1784.

3.0 JOINING SYSTEM:
Joints may be either plastic sleeve with gaskets or an integral bell-gasket joint. When the joint is assembled, it shall prevent misalignment of adjacent pipes and form either a soil (2 psi hydrostatic test per AASHTO Standard Specifications for Highway Bridges: Section 26.4.2.4) or watertight joint (10.8 psi test per ASTM D3212 "Standard Specifications for Joints for Drain and Sewer Plastic Pipes Using Flexible Elastomeric Seals" as required.

4.0 INSTALLATION
PVC thermoplastic pipe and fittings manufactured to these specifications shall be installed in accordance with ASTM D2321-89.

Heights of Cover

DIAMETER	CORRUGATED PVC PIPE (AASHTO M304)
INCHES	FEET
12	49
15	47
18	51
24	50
30	50

*Minimum cover (H-20 live load) = (ASTM D2321 with Class A1 embedment)

CORRUGATED STEEL STORM SEWER PIPE SPECIFICATIONS

1.0 GENERAL
This item shall govern the furnishings of corrugated steel pipe and pipe-arch for culverts and storm sewer for the types, sizes and designations as specified in these specifications.

2.0 MATERIALS
This pipe shall be fabricated from sheets conforming to the current AASHTO M-274 (ASTM A819) specification for ALUMINIZED STEEL Type 2 material or the current AASHTO M-246 (ASTM 742) specification for POLYMER coated galvanized steel material.

3.0 MANUFACTURE
This pipe shall meet the requirements of AASHTO M-36 (ASTM A760) for corrugated steel pipe. All pipe shall be manufactured with a minimum of two-re-rolled annular ends.

4.0 CLASSIFICATION (TYPE) FOR DIAMETERS 46" THROUGH 96"
This pipe shall be manufactured to conform to the current AASHTO M-36 (ASTM A 760) specification and shall have an extended helical corrugation pattern of ¾ x ¾" 7 ½" as described in AASHTO M-36 (ASTM A 760).

All round pipe shall be manufactured to conform to the current AASHTO M 245 (ASTM A 762 & A 760) specification and shall have a full circular cross section with a smooth steel liner and helically corrugated shell, integrally attached at helical lock seams. All round pipe shall conform to the Type IA pipe classification. All pipe arches shall conform to the Type IIA classification.

Type I pipe classifications will also be considered. These pipes shall be manufactured out of ALUMINIZED STEEL Type 2 or POLYMER coated galvanized steel as referenced above.

5.0 POST APPLIED COATING
All Pipes manufactured with ALUMINIZED STEEL Type 2 shall be fully coated both inside and out with a minimum thickness of 0.05 in. (1.3 mm) measured from the crest of the corrugations, on the top of ribs, (as in Type IR pipe) or on the smooth inside surface of the pipe. The coating shall be uniform Class B (bituminous) or Class M (mastic) material as described in AASHTO M-190 (ASTM A 849).

6.0 GAUGE
Unless otherwise specified on the specifications, gauges shall be minimum as follows:

TYPE IR (SPIRAL CORRUGATION)	
DIAMETER	GAUGE
36-48"	16
54-60"	14
66-96"	12
TYPE I (STANDARD)	
54-138"	12
144"	10
All Types IA shall be 12 gauge shell and 18 gauge liner.	

7.0 COUPLING BANDS

Coupling bands shall be of the same base material and coating as the pipe. Coupling bands shall lap evenly on each of the pipes being connected and shall fit securely into at least one full circumferential corrugation to form a tightly closed joint.

All pipes shall be field jointed with corrugated locking bands. Connecting bands shall be drawn together by means of not less than two bolts not less than ½ in. (13 mm) diameter through angles or bar and strap device suitable welded or riveted.

Coupling bands shall be no more than three normal sheet thickness lighter than the pipe to be connected and in no case thinner than 0.052 in. (1.32 mm).

8.0 INSTALLATION

Corrugated steel pipe shall be installed as outlined in AASHTO Standard Specifications for Highway Bridges, Section 26 and ASTM A798.

9.0 MEASUREMENT

Corrugated steel pipe will be measured by linear foot. Such measurements shall be made between the ends of the barrel along its central axis. Where spurs or branches, or connections to existing pipe lines are involved, measurements of the spur or new connecting pipe will be made from the intersection of the central axis with the outside surface of the pipe into which it connects. Where inlets, headwalls, catch basins, manholes, junction chambers or other structures are included in lines of pipe that length of pipe tying into the other structure wall will be included for measurement but no other portion of the structure length or width will be included.

For multiple pipes, the measured length will be the sum of the lengths of the barrels, measured as prescribed above.

In the event of a change in design which either increases or decreases the quantity of pipe, the variation in quantity will be measured as prescribed above and the quantity shown in the specifications will be increased or decreased as the case may be.

10.0 PAYMENT

Payment for corrugated steel pipe, measured as prescribed above will be made at the contract unit price bid per linear foot for various sizes, gauges and types of corrugated steel pipe.

Payments shall be full compensation for furnishings, transporting and installing the pipe. This includes materials, labor, equipment, tools and incidentals necessary to complete the installation in accordance to these specifications.

CATEGORY (A) – PIPES
REINFORCED CONCRETE PIPE - GASKET JOINT PIPE SPECIFICATIONS

REINFORCED CONCRETE PIPE - GASKET JOINT PIPE SPECIFICATIONS						
CLASS III - ASTM C76 STANDARDS						
PIPE I.D.	WALL THICKNESS	CONCRETE STRENGTH	CAGE			PIPE WEIGHT
(in)	(in)	(PSI)	TYPE	INNER	OUTER	(LBS)
15	3.00	4,000	SINGLE	3"x6"-W1.75/W2.5		1,520
18	3.25					1,920
24	3.75					2,840
30	4.25			3"x6"-W2.5/W2.5		4,020
36	4.75		DOUBLE		3"x6"-W1.75/W2.5	5,520
42	5.25			3"x8"-W3.0/W2.0		7,100
48	5.75			3"x6"-W4.0/W2.5	3"x6"-W2.5/W2.5	8,280
54	6.25			3"x8"-W5.25/W2.5	3"x6"-W3.5/W2.5	9,800
60	6.75			2"x6"-W4.5/W2.5	3"x6"-W4.0/W2.5	12,184
72	7.75			2"x6"-W6.0/W2.5	3"x8"-W5.75/W3.0	15,900

REINFORCED CONCRETE PIPE - GASKET JOINT PIPE SPECIFICATIONS						
CLASS IV - ASTM C76 STANDARDS						
PIPE I.D.	WALL THICKNESS	CONCRETE STRENGTH	CAGE			PIPE WEIGHT
(in)	(in)	(PSI)	TYPE	INNER	OUTER	(LBS)
15	3.00	4,000	SINGLE	3"x6"-W2.5/W2.5		1,520
18	3.25					1,920
24	3.75			3"x6"-W3.5/W2.5		2,840
30	4.25			3"x6"-W4.0/W2.5		4,020
36	4.75		DOUBLE	3"x6"-W3.5/W2.5	3"x6"-W2.0/W2.0	5,520
42	5.25			3"x8"-W5.0/W2.5	3"x6"-W3.0/W2.5	7,100
48	5.75			3"x6"-W6.5/W3.0	3"x6"-W4.0/W2.5	8,280
54	6.25			2"x8"-W5.75/W3.0	3"x8"-W5.0/W2.5	9,800
60	6.75	5,000		2"x8"-W7.0/W3.0	3"x6"-W6.25/W3.0	12,184
72	7.75			2"x8"-W10.0/W4.0	2"x8"-W6.0/W2.5	15,900

REINFORCED CONCRETE PIPE - GASKET JOINT PIPE SPECIFICATIONS						
CLASS V - ASTM C76 STANDARDS						
PIPE I.D.	WALL THICKNESS	CONCRETE STRENGTH	CAGE			PIPE WEIGHT
(in)	(in)	(PSI)	TYPE	INNER	OUTER	(LBS)
15	3.00	6,000	SINGLE	3"x6"-W2.5/W2.5		1,520
18	3.25					1,920
24	3.75		DOUBLE	3"x6"-W3.0/W2.5	3"x6"-W2.5/W2.5	2,840
30	4.25			3"x6"-W4.5/W2.5	3"x6"-W3.0/W2.5	4,020
36	4.75			2"x6"-W4.5/W2.5	3"x6"-W4.0/W2.5	5,520
42	5.25			2"x8"-W6.0/W2.5	3"x8"-W5.75/W3.0	7,100
48	5.75			2"x8"-W8.0/W3.5	3"x8"-W7.0/W3.0	8,280
54	6.25			2"x8"-W10.0/W4.0	2"x8"-W6.0/W2.5	9,800
60	6.75			2"x8"-W11.5/W4.5	2"x8"-W7.0/W3.0	12,184
72	7.75			2"x6"-W8.5/W6.5	2"x8"-W10.0/W4.0	15,900

General Note:

1. Concrete gasket pipe shall meet Bureau of Reclamation R-4 Joint O-Ring gasket ASTM C361 Standards and price quote shall be included with the pipes.
2. All welded Wire Fabric Steel shall meet ASTM 82 and ASTM 185 Standards.
3. Aggregates shall meet ASTM C 33 Standards.
4. Fly Ash shall meet ASTM C 618-97 Standards.
5. Type II Cement shall meet ASTM C 150 Standards.
6. The maximum lengths of pipe sections shall be 8 feet.

The following are the technical requirements for the Reinforced Gasket Joint Concrete Pipe ASTM C-76 Class III.

D.1 GENERAL:
Pipe shall be manufactured and tested according to ASTM Designation: C-361 except as hereinafter changed and further specified. The requirements for cement, admixture, concrete strength, wall thickness, joints, manufacture and handling of pipe shall be in accordance with Paragraphs C-2, C-3, C-4, C-5, C-6, C-7, C-8, C-10, C-11, C-12, C-13 and C-14, respectively.

D.2 STEEL REINFORCEMENTS:
The reinforcing steel shall conform to requirements of Class III reinforced pipe, ASTM Designation: C-76. Reinforcements may be circular or elliptical.

D-3 PHYSICAL TEST REQUIREMENTS:
The test for internal hydrostatic pressure on the pipe shall not be less than that shown in Table "A" Paragraph C-10 thereof. The test for minimum 3-edge bearing load (pounds per linear foot) shall not be less than that required for Class III reinforced concrete pipe, ASTM Designation C-76.

RELATED PARAGRAPHS C-2 CEMENT:
The cement shall be Type II, low alkali in accordance with Federal Specifications SS-C 1960/3. The Contractor shall furnish certificates from the mill manufacturing the cement evidencing compliance with these specifications.

C-3 ADMIXTURE:
All concrete in concrete pipe placed by the placing and vibrated method shall have air-entraining agent conforming to ASTM Designations: C260. The amount of air-entraining agent used shall be such as will effect the entrainment of 2-1/2 $\pm$ 1 percent of air by volume, of the concrete as discharged from the mixer. Natural cement, slag cement, pozzolon or other mixtures shall not be added to the concrete without the written authorization of the Engineer in charge of the project.

C-4 CONCRETE STRENGTH:
The strength requirements shall be 4,000 pounds per square inch in 28 days. The 4,000 PSI concrete test shall be in accordance with the latest edition of ASTM Designation: C-76.

C-5 CONCRETE MIXTURE:
The aggregate requirements of the latest ASTM Designation: C361 are changed to include, "the maximum size coarse aggregate shall be of the largest size practicable for placement considering the wall thickness of the pipe but shall not exceed 1-1/2 inches. The percentage of coarse aggregate to the total aggregate shall be as high as practicable for manufacture of the pipe".

C-6 CURING REQUIREMENTS:
The curing requirements in the latest edition of ASTM Designation: C361 are changed to include this additional requirement at the end of the paragraph: "If forms are stripped immediately after the pipe is cast and moved to the curing area, the concrete pipe shall not be lifted or tipped until a minimum concrete compressive strength of 2,500 PSI is attained. Determination of the required strength shall be accomplished by tests of concrete cylinders as described in the latest edition of ASTM Designation: C361".

C-7 WALL THICKNESS:
The thickness of the pipe wall shall be not less than that shown in Table A, Paragraph C-10, Physical Test Requirements", hereof.

C-8 PIPE LENGTHS:
The maximum lengths of pipe sections shall be 8 feet.

C-10 PHYSICAL TEST REQUIREMENTS:
The hydrostatic test pressures for the pipe and rubber gasket joint required in the latest edition of ASTM Designations 361 are changed to those specified in Table A. The Contractor shall also perform external load crushing strength test on the pipe. The external load crushing strength test shall be in accordance with the minimum three-edge bearing load as specified in Table A.

TABLE A: PHYSICAL TEST REQUIREMENTS

Internal diameter (inches)	Minimum Shell Thickness (inches)	Internal Hydrostatic Pressure On Individual Section of Pipe (PSI)	Minimum 3-Edge Bearing Load (pounds per linear foot)
15	2	50	1,700
16	2	50	1,800
18	2	50	1,900
21	2 – ¼	45	2,100
24	2 – ½	40	2,200
30	2 – ¾	35	2,500
36	3	30	4.050
42	4 – ½	30	4,725
48	5	30	5,400
54	4 – ½	25	6,075
60	6	25	6,750
72	7	25	8,100

C-11 JOINTS:
Joints shall be made with round rubber gasket in conformance with the latest edition of ASTM Designation: C-361 and price quote shall be included with the pipes.

REINFORCED CONCRETE PIPE - TONGUE & GROOVE PIPE SPECIFICATIONS

REINFORCED CONCRETE PIPE - TONGUE & GROOVE PIPE SPECIFICATIONS						
CLASS III - ASTM C76 STANDARDS						
PIPE I.D.	WALL THICKNESS	CONCRETE STRENGTH	CAGE			PIPE WEIGHT
(in)	(in)	(PSI)	TYPE	INNER	OUTER	(LBS)
15	2.25	4,000	SINGLE	3"x6"-W1.75/W2.5		1,045
18	2.50					1,400
24	3.00					2,100
30	3.50			2"x8"-W5.0/W2.5		3,050
36	4.00			2"x8"-W6.0/W2.5		4,200
42	5.25		DOUBLE	3"x8"-W3.0/W2.0	3"x6"-W1.75/W2.5	6,250
48	5.75			3"x6"-W4.0/W2.5	3"x6"-W2.5/W2.5	8,100
54	6.25			3"x8"-W5.25/W2.5	3"x6"-W3.5/W2.5	9,420
60	6.75			2"x6"-W4.5/W2.5	3"x6"-W4.0/W2.5	11,500
72	7.75			2"x6"-W6.0/W2.5	3"x6"-W5.75/W3.0	15,900

REINFORCED CONCRETE PIPE - TONGUE & GROOVE PIPE SPECIFICATIONS						
CLASS IV - ASTM C76 STANDARDS						
PIPE I.D.	WALL THICKNESS	CONCRETE STRENGTH	CAGE			PIPE WEIGHT
(in)	(in)	(PSI)	TYPE	INNER	OUTER	(LBS)
15	3.00	4,000	SINGLE	3"x6"-W2.5/W2.5		1,045
18	3.25			2"x6"-W2.5/W2.5		1,400
24	3.75			2"x6"-W4.5/W2.5		2,100
30	4.25			2"x8"-W6.0/W2.5		3,050
36	4.75		DOUBLE	2"x8"-W5.0/W3.0	3"x8"-W4.5/W2.5	4,200
42	5.25			3"x6"-W5.0/W2.5	3"x6"-W3.0/W2.5	6,250
48	5.75			3"x6"-W6.5/W3.0	3"x6"-W4.0/W2.5	8,100
54	6.25			2"x8"-W5.75/W3.0	3"x6"-W5.0/W2.5	9,420
60	6.75			2"x8"-W7.0/W3.0	3"x8"-W6.25/W3.0	11,500
72	7.75	5,000		2"x8"-W10.0/W4.0	2"x8"-W6.0/W2.5	15,900

REINFORCED CONCRETE PIPE - TONGUE & GROOVE PIPE SPECIFICATIONS						
CLASS V - ASTM C76 STANDARDS						
PIPE I.D.	WALL THICKNESS	CONCRETE STRENGTH	CAGE			PIPE WEIGHT
(in)	(in)	(PSI)	TYPE	INNER	OUTER	(LBS)
15	3.00	6,000	SINGLE	3"x6"-W3.5/W2.5		1,045
18	3.25			3"x8"-W4.75/W2.5		1,400
24	3.75			3"x8"-W6.0/W2.5		2,100
30	4.25		DOUBLE	2"x8"-W7.0/W3.0	3"x8"-W6.25/W3.0	3,050
36	4.75			2"x8"-W8.25/W3.5	2"x8"-W5.0/W3.0	4,200
42	5.25			2"x8"-W6.0/W2.5	3"x8"-W5.75/W3.0	6,250
48	5.75			2"x8"-W8.0/W3.5	3"x8"-W7.0/W3.0	8,100
54	6.25			2"x8"-W10.0/W4.0	2"x8"-W6.0/W2.5	9,420
60	6.75			2"x8"-W11.5/W4.5	2"x8"-W7.0/W3.0	11,500
72	7.75			2"x6"-W8.5/W6.5	2"x8"-W10.0/W4.0	15,900

General Note:

1. All welded wire fabric steel shall meet ASTM 82 and ASTM 185 standards.
2. Aggregates shall meet ASTM C 33 standards.
3. Fly ash shall meet ASTM C 618-97 standards.
4. Type II cement shall meet ASTM C 150 standards.
5. Concrete joint sealant shall meet ASTM C 990 standards.
6. Concrete joint primer shall meet ASTM D 41 standards.
7. The maximum lengths of pipe sections shall be 8 feet.

REINFORCED POLYETHYLENE PIPE SPECIFICATIONS

SCOPE
This specification(s) describes reinforced polyethylene pipe for use in gravity flow storm drain and culvert applications in 24" through 96" nominal diameters.

DESCRIPTION
This pipe shall have a smooth waterway and exterior profile that is reinforced with high strength galvanized steel ribs. The continuous reinforcing ribs are completely encased within the polyethylene profile. Reinforced polyethylene pipe is manufactured using a helical winding process that results in continuously fusion welded circumferential lap seam. The pipe profile is manufactured using high pressure-rated thermoplastic meeting the requirements of ASTM F2562 "Standard Specification for Steel Reinforced Thermoplastic Ribbed Pipe and Fittings for Non-Pressure Drainage and Sewerage". For the purposes of hydraulic design, the recommended Manning's "n" value shall be 0.013 for pipe diameters included within this specification.

MATERIAL PROPERTIES
Virgin high density polyethylene pressure-related resins are used to manufacture reinforced polyethylene pipe and complimentary fabricated fittings. Resins shall conform to be minimum requirements of cell classification 345464 C as defined and described in the latest version of ASTM D3350 "Standard Specification for Polyethylene Plastic Pipe and Fittings Materials".

JOINT PERFORMANCE
Pipe lengths shall be joined on site using bell & spigots especially designed for reinforced polyethylene pipe. Both bell and spigot shall be reinforced with steel that is fully encased in pressure rated high density polyethylene meeting the requirements set forth in the above Material Properties paragraph and shall be watertight to an internal water pressure of 15 PSI when tested in accordance with ASTM D3212 "Standard Specification for Joints for Drain and Sewer Plastic Pipes Using Flexible Elastometric Seals".

FITTINGS
All fittings shall be fabricated from reinforced polyethylene pipe using fusion welded construction to ensure no loss of structural integrity of water-tightness at welded seams and joints.

INSTALLATION
Installation shall be in accordance with ASTM D2321 "Practice for Underground Installation of Thermoplastic Pipe for Sewers and Other Gravity-Flow Applications" along with product-specific recommendation by the manufacturer. Minimum cover shall be 1 ft. and maximum cover shall be 30 ft.

AWWA C900 PVC PLASTIC PRESSURE PIPE SPECIFICATIONS

SCOPE
This specification designates general requirements for 4" through 12" C.I.O.D.'s pipe produced in blue or white un-plasticized polyvinyl chloride (PVC) plastic pressure pipe with integral bell and spigot joints for the conveyance of water and other fluids. This pipe shall meet the requirements of AWWA Standard C900 "Polyvinyl Chloride (PVC) Water Distribution Pipe".

MATERIALS
All pipes shall be made from quality PVC resin, compounded to provide physical and mechanical properties that equal or exceed cell class 12454 as defined in ASTM D1784.

HYDROSTATIC PROOF TESTING
Each standard length of pipe is tested up to 400 psi for Pressure Class 165; 600 psi for Pressure Class 235; 800 psi for Pressure Class 305 for a minimum of 5 seconds. The integral bell shall be tested with the pipe.

STANDARD LAYING LENGTHS
Standard laying lengths are 20 feet for all sizes.

PIPE

All pipes shall be suitable for use as pressure conduit. Provisions must be made for expansion and contraction at each joint with an elastomeric gasket. The bell shall consist of an integral wall section with a factory installed, solid cross section Rieber or other elastomeric gasket, which meets the requirements of ASTM F477. The bell section shall be designed to be at least as hydrostatically strong as the pipe barrel and meet the requirements of AWWA C900. The joint design shall meet the requirements of ASTM D3139 under both pressure and 22 in. Hg vacuum. Sized and dimensions shall be as shown in this specification.

QUICK BURST TEST

Randomly selected samples testing in accordance with AWWA C900 and UL 1285 shall withstand, without failure, the pressures listed below when applied for 60-70 seconds.

DR	PRESSURE CLASS (psi)		MINIMUM BURST PRESSURE AT 73 F (psi)
	AWWA C900-97/FM 1612	AWWA C900-07	
25	100	165	535
18	150	235	755
14	200	305	985

DROP IMPACT TEST

Pipe shall withstand, without failure using Tup "B" and Flat Rate Holder "B", at 73 F, a tup impact energy of 100 ft-lbf for all Pressure Class of 4"-12" trade sizes. There shall be no visible evidence of shattering or splitting when the energy is imposed.

AWWA C905 PVC PLASTIC WATER PIPE SPECIFICATIONS

SCOPE

This specification designates general requirements for 14" through 48" un-plasticized polyvinyl chloride (PVC) plastic water pipe with integral bell and spigot joints for the conveyance of water and other fluids. This pipe shall meet AWWA C905 ANSI/NSF-61 and ANSI/UL 1285 (14" – 24").

MATERIALS

Pipe shall meet the requirements of AWWA Standard C905 "Polyvinyl Chloride (PVC) Water Transmission Pipe." All pipes shall be made from quality PVC resin, compounded to provide physical and mechanical properties that equal or exceed cell class 12454 as defined in ASTM D1784.

STANDARD LAYING LENGTHS

Standard laying lengths are 20 feet for all sizes.

PIPE

All pipes shall be suitable for use as pressure conduit. Provisions must be made for expansion and contraction at each joint with an elastomeric gasket. The bell shall consist of an integral wall section with a factory installed, solid cross section Rieber/other elastomeric gasket, which meets the requirements of ASTM F477. The bell section shall be designed to be at least as hydrostatically strong as the pipe barrel and meet the requirement of AWWA C905. The joint designs shall meet requirements of ASTM D3139, under both pressure and 22 in. Hg vacuum. Sizes and dimensions shall be as shown in this specification.

QUICK BURST TEST

Randomly selected samples tested in accordance with ANSI/UL 1285 shall withstand, without failure, the pressures listed below when applied for 60-70 seconds.

DR	PRESSURE RATING (psi)	MINIMUM BURST
18	235	755
25	165	535
32.5	125	400
41	100	315
51	80	255

FLATTENING TEST

Specimens of pipe, a minimum of 6 in. (150 mm) long, shall be flattened between parallel plates in a suitable press until the distance between the plates is 40 percent of OD of the pipe. The rate of flattening shall be uniform and such that the compression is completed within 2 to 5 minutes. There shall be no evidence of splitting, cracking or breaking.

SDR 26 AND SDR 35 GASKETED GRAVITY SANITARY SEWER PIPE

PVC gravity sewer pipe shall be made from a compound conforming to a cell classification of 12454 or 12364 as defined by ASTM D1784 and in accordance with ASTM D3034 for sizes four inch through fifteen inch. The wall thickness, when tested according to ASTM D3412, shall correspond to a dimension ratio of SDR 35 with a pipe stiffness value of 46 or SDR 26 with a pipe stiffness of 115 for heavy wall pipe. Integral bells shall incorporate locked in gaskets meeting the requirements of ASTM D3212 and F477. The pipe shall be provided in lengths of 14 feet or 20 feet as required.

ASTM D3034 GASKETED GRAVITY SEWER PIPE

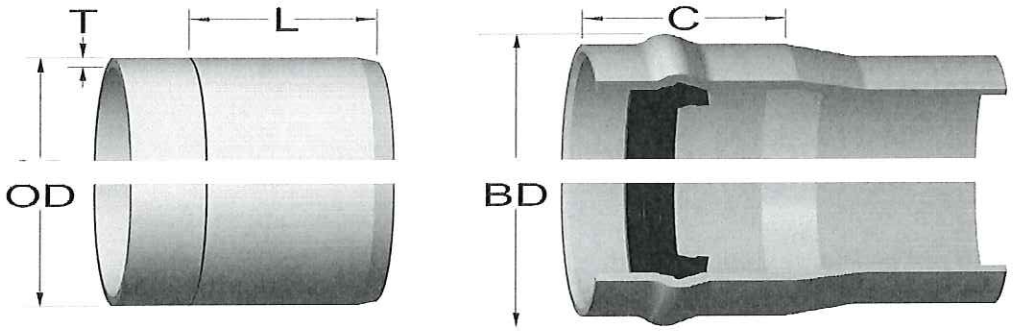

NOMINAL PIPE SIZE	OUTISDE DIA. – NOM. (OD)	*APPROX. BELL DIA. (BD)	**APPROX. BELL DEPTH (C)	INSERT MARK (L)
4"	4.215	5.25	3.75	3.13
6"	6.275	7.50	4.63	4.00
8"	8.400	10.00	5.25	4.13
10"	10.500	12.25	5.88	5.13
12"	12.500	14.25	6.50	5.38
15"	15.300	17.25	7.75	7.38

NOMINAL PIPE SIZE	SDR 35 (T)	SDR 26 (T)
4"	.120	.162
6"	.180	.241
8"	.240	.323
10"	.300	.404
12"	.360	.481
15"	.437	.588

HIGH PERFORMANCE (HP) POLYPROPYLENE STORM PIPE

1.0 SCOPE:

This specification includes materials and test methods for 12 to 60 inch diameter HP Polypropylene Pipe. The requirements of this specification are intended to provide pipe and fittings suitable for underground use in gravity-flow applications such as storm sewers, drainage and under-drains.

2.0 PIPE:

12 to 30 inch HP Polypropylene Pipe shall have a smooth interior and annular exterior corrugation and are required to meet or exceed ASTM F2736 and AASHTO M330. 36 to 60 inch pipe shall have a smooth interior and annular exterior corrugations and are required to meet or exceed ASTM F2881 and AASHTO M330. Pipe and fittings shall be homogeneous throughout and free from visible cracks, holes, foreign inclusions or other injurious defects.

3.0 FITTINGS:
Fittings shall conform to ASTM F2736, ASTM F2881 and AASHTO M330, for the respective diameters. Bell & spigot connections shall utilize a spun-on, welded or integral bell and spigot with gaskets meeting ASTM F477. Bell & spigot fittings joint shall meet the watertight joint performance requirements of ASTM D3212. Corrugated couplings shall be split collar, engaging at least 2 full corrugations.

4.0 JOINTS:
HP Polypropylene Pipe shall be joined with a gasketed integral bell & spigot joint meeting the requirements of ASTM F2736 or F2881, for the respective diameters.

HP Polypropylene Pipe shall be watertight according to the requirements of ASTM D3212. Spigots shall have gaskets meeting the requirements of ASTM F477. Gasket shall be installed by the pipe manufacturer and covered with a removable, protective wrap to ensure the gasket is free from debris. A joint lubricant available from the manufacturer shall be used on the gasket and bell during assembly.

HP Polypropylene Pipe shall have a reinforced bell with a polymer composite band installed by the manufacturer.

5.0 MATERIAL PROPERTIES:
Polypropylene compound for pipe and fitting production shall be impact modified copolymer meeting the material requirements of ASTM F2736, Section 4, ASTM F2881, Section 5 and AASHTO M330, Section 6.1, for the respective diameters.

6.0 INSTALLATION:
Installation shall be in accordance with ASTM D2321, manufacturers recommended installation guidelines and plan specifications.

7.0 PIPE DIMENSIONS:

Nominal Pipe I.D. in (mm)	12 (300)	15 (375)	18 (450)	24 (600)	30 (750)	36 (900)	42 (1050)	48 (1200)	60 (1500)
Average Pipe I.D. In (mm)	12.1 (307)	14.9 (378)	18.0 (457)	24.1 (612)	30.1 (765)	35.7 (907)	41.8 (1062)	47.3 (1201)	59.3 (1506)
Average Pipe O.D. in (mm)	14.5 (368)	17.6 (447)	21.2 (538)	28.0 (711)	35.4 (899)	41.1 (1044)	47.2 (1199)	53.8 (1367)	66.5 (1689)
Minimum Pipe Stiffness * @ 5% Deflection* #/in./in. (kN/m^2)	75 (520)	60 (411)	56 (385)	50 (343)	46 (320)	40 (275)	35 (240)	35 (240)	30 (205)

HIGH DENSITY POLYETHYLENE PIPE (HDPE)

SCOPE:
This specification describes 4- through 60 inch (100 to 1500 mm) HDPE pipe (per ASTM F2648) for use in gravity-flow land drainage applications.

PIPE Requirements:
HDPE pipe (per ASTM F2648) shall have smooth interior and annular exterior corrugations.

- 4-through 60 inch (100 to 1500 mm) shall meet ASTM F2648
- Manning's "n" value for use in design shall be 0.012

Joint Performance:
Pipe shall be joined using a bell & spigot joint meeting ASTM F2648. The joint shall be soil-tight and gaskets, when applicable, shall meet the requirements of ASTM F477. Gaskets shall be installed by the pipe manufacturer and covered with a removable wrap to ensure the gasket is free from debris. A joint lubricant supplied by the manufacturer shall be used on the gasket and bell during assembly.

Fittings:
Fittings shall conform to ASTM F 2306. Bell and spigot connections shall utilize a spun-on or welded bell and valley or saddle gasket meeting the soil-tight joint performance requirements of ASTM F 2306.

Material Properties
Material for pipe production shall be an engineered compound of virgin and recycled high density polyethylene conforming with the minimum requirements of cell classification 424420C (ESCR Test Condition B) for 4-through 10 inch (100 to 250 mm) diameters, and 435420C (ESCR Test Condition B) for 12 through 60 inch (300 to 1500 mm) diameters, as defined and described in the latest version of ASTM D3350, except that carbon black content should not exceed 4%. The design engineer shall verify compatibility with overall system including structural, hydraulic, material and installation requirements for a given application.

Installation
Installation shall be in accordance with ASTM D2321 and manufacturers published installation guidelines, with the exception that minimum cover in trafficked areas for 4-through 48 inch (100 to 1200 mm) diameters shall be one foot. (0.3 m) and for 60 inch (1500 mm) diameters, the minimum cover shall be 2 ft. (0.6 mm) in single run applications. Backfill for minimum fill heights depend on embedment material and compaction level; please refer to manufactures guide lines.

Pipe I.D In mm	4 (100)	6 (150)	8 (200)	10 (250)	12 (300)	15 (375)	18 (450)	24 (600)	30 (750)	36 (900)	42 (1050)	48 (1200)	60 (1500)
Pipe O.D. * In mm	4.8 (122)	6.9 (175)	9.1 (231)	11.4 (290)	14.5 (368)	18 (457)	22 (559)	28 (711)	36 (914)	42 (1067)	48 (1219)	54 (1372)	67 (1702)
Perforations	All diameters availability with or without perforation												

*Pipe O.D. values ar provided for reference purposes only. Values stated for 12 through 60 inch are +/- 1 inch.

TERMS & CONDITIONS:

1. The contract term will be for a period of one (1) year period with Hidalgo County's option to extend the contract for an additional one (1) year under the same rates, terms and conditions.

2. Hidalgo County reserves the right to continue this bid for an additional sixty (60) day grace period at the end of the contract term for unforeseen delay in award of new bid for next contract.

3. Hidalgo County reserves the right to hold the bids received for a period of ninety (90) days without taking action hereon.

4. Hidalgo County may award the bid on a lump sum basis to one (1) bidder or to multiple bidders on an item by item basis in each category, whichever is in the best interest of the County. For evaluation and consideration of items bid, samples will be submitted upon request. Categories will be as follows.

5. Hidalgo County reserves the right to reject any/all bids, to waive any/all formalities or Technicalities, or to accept the bid considered the best and most advantageous to the County.

6. After bid is awarded and low bidder(s) default(s) in meeting the general instructions to bidders and/or comply with contractual agreement, Hidalgo County reserves the right to seek services from the next low bidder(s). In such event, County shall charge the successful bidder(s) the difference for any additional cost of such item(s).

7. Any contract awarded to a successful bidder will be in effect until:
   (a) The contract expires,
   (b) Delivery and acceptance of products and/or performance of service ordered,
   (c) Terminated by County with thirty (30) days written notice prior to cancellation.

8. It is understood and agreed that in case Hidalgo County should need "any items listed" and it is not available within the time frame needed from the successful Bidder during the term of this contract, Hidalgo County reserves the right to purchase these items from other sources other than the successful Bidder and shall not be in violation of any terms or conditions of said contract.

9. After Bid is awarded and successful awarded contractor(s) default(s) in meeting the general instructions to bidder(s) and/or compiling with Bid agreement, Hidalgo County reserves the right to seek services from the next low bidder. In such event, County shall charge the successful bidder the difference for any additional cost to such item.

10. Hidalgo County reserves the right to seek purchases from State awarded vendors or any other Cooperative Purchasing programs, whenever it is in the best interest of the County to do so.

11. Insurance requirements for this project to be maintained throughout the contract term (Refer to limits on the Exhibit "C" for limits); insurance certificate must be submitted to the Purchasing Department prior to any services being performed by the awarded bidder.

12. The bidder(s) awarded the contract **cannot** engage the services of a **subcontractor without prior written consent of Hidalgo County** to perform services hereunder. The successful bidder(s) must present evidence that the proposed subcontractor possess all the necessary licenses and permits to perform the services and that subcontractor has obtained the required insurance.

13. Bidder(s) agree that to the extent an item(s) in unavailable for Bidder's own inventory, Bidder(s) will be responsible for locating an alternative supplier and for providing the product or service to Hidalgo County.

14. Unit prices quoted shall remain firm for the period of the contract and shall include the cost of shipping and delivery of all items to the designated FOB point and must include any and all cost in the delivered unit price.

All costs and expenses associated with the preparation and submission of proposals shall be the responsibility of the submitter and no reimbursements for such charges or expenses shall be passed onto the County.

Market Volatility and Unit Price Adjustments:
Hidalgo County recognizes that during periods of national crisis and unstable economic conditions, unforeseen price increases might affect costs for goods and services contracted on an annual basis. The following procedure may be employed to mediate price volatility:

- **Requesting Price Adjustment**: Upon written request of the Vendor to the County Purchasing Agent, the County may review evidence of prevailing industry-wide market conditions that warrant an adjustment in bid prices contained in the contract.
- A Vendor must tie any price change clause to an industry-wide or otherwise nationally recognized index, or some other form of verifiable document. Such written request must be accompanied by a certified copy of the supplier's advisory or notification to the vendor of the price changes.
- The Vendor must put the Purchasing Agent on the mailing lists for such publications so that the Purchasing Agent can monitor said changes. Such membership shall be at no cost to the County.
- The County Purchasing Agent retains the right to determine whether or not such proposed price changes are in the best interest of the County.
- No price escalation will be authorized in excess of the amount of the increase referred to in the supplier's notice.
- The County may only grant a price increase if the evidence presented is deemed reliable. Should the County allow a price increase, the approved price change shall be honored for all orders received by the vendor or contractor after the effective date of such price change. Approved price changes are not applicable to orders already issued and in process at time of price change.
- **Price Reduction**: Vendor shall notify the County at the time when the Vendor's costs for items and/or supplies reduce due to stabilization in the market at which time prices for items on this contract shall be reduced accordingly. Failure by the Vendor to notify the County of a decrease in costs for items and/or supplies for which the Vendor was granted a price adjustment, may result in immediate termination of this contract and the County shall not be obligated to pay the Vendor the difference between the contract price and the price adjustment.

- **Time Frame for Adjusted Price Increases:** Price increases are only valid for the quarter in which they are requested and approved. Prices shall return to the original contract price at the beginning of the following quarter unless a Vendor notifies the County in writing within ten (10) days of expiration of the quarter in which the price increase is in effect, that it desires to have the price increase continue or that the Vendor is requesting a different price increase for the following quarter. Such request must be supplemented with sufficient justification to demonstrate that the price increase remains necessary. The County Purchasing Department shall have sole discretion whether to grant the price increase extension. The County too, shall have discretion to unilaterally reduce, eliminate or extend a price adjustment to the Vendor at any time upon written notice from the County to the Vendor demonstrating justification for such reduction, elimination or extension of the price adjustment.

- **Allowable Review Periods**: Price adjustment reviews may only be requested by the Vendor on a quarterly basis. However, the County may at its own discretion, conduct temporary price adjustment reviews at any time. The County Purchasing Agent and/or the County Auditor reserve the right to audit and/or examine any pertinent books, documents, papers, records or invoices relating directly to the contract transaction in question after reasonable notice and during normal business hours.

- **Dollar Limit to Price Changes**: The total increase in contract price shall not exceed twenty-five percent (25%) of the original contract price during the contract term.

ADDITIONAL INFORMATION

Hidalgo County is requesting that any and all questions, inquiries, and clarifications regarding quotes, bids, proposals, or statements of qualifications be addressed to, Martha L. Salazar, CPPB, Purchasing Agent, 2812 S. Business Hwy. 281, Edinburg, Texas 78539. **TELEPHONE INQUIRIES WILL NOT BE ACCEPTED.**

All written inquiries will be accepted via facsimile (956) 292-7612 or via e-mail to matilde.faz@co.hidalgo.tx.us by no later than, Monday, March 27, 2017 by 5:00 p.m. Responses to said inquiries will be sent to all applicants via-email by no later than Wednesday, March 29, 2017 by 5:00 p.m.

EXHIBIT "B"

BID PAGE

REQUEST FOR BIDS

Hidalgo County

(All funding sources, programs & entities)

"Pipes & Related Miscellaneous Items"

RFB No.: 2017-046-04-05-FAZ

CATEGORY (A) – PIPES

CORRUGATED POLYVINYL CHLORIDE (PVC) STORM SEWER PIPE **NIGP CODE: 665-89** Polyvinyl Chloride (PVC)		
DESCRIPTION	PRICE	
12"		LF
15"		LF
18"		LF
24"		LF
30"		LF
36"		LF
42"		LF
48"		LF

CORRUGATED STEEL STORM SEWER PIPE **NIGP CODE: 210-29** Corrugated Galvanized Metal Pipe **(UNIT PRICE INCLUDES ONE GASKETED BAND CONNECTION FOR EVERY 20 FOOT JOINT)**				
DIAMETER	TYPE "IR"PIPE PRICE	TYPE "I" PIPE PRICE	TYPE "IA" PIPE PRICE	
12"				LF
15"				LF
18"				LF
24"				LF
30"				LF
36"				LF
42"				LF
48"				LF
54"				LF
60"				LF
66"				LF
72"				LF
78"				LF
84"				LF
90"				LF
96"				LF
102"				LF
108"				LF
114"				LF
120"				LF
126"				LF
132"				LF
138"				LF
144"				LF

REINFORCED CONCRETE PIPE – RUBBER GASKET JOINT PIPE NIGP CODE: 658-68						
DESCRIPTION	CLASS III PRICE		CLASS IV PRICE		CLASS V PRICE	
12"		LF		LF		LF
15"		LF		LF		LF
18"		LF		LF		LF
24"		LF		LF		LF
30"		LF		LF		LF
36"		LF		LF		LF
42"		LF		LF		LF
48"		LF		LF		LF
54"		LF		LF		LF
60"		LF		LF		LF
72"		LF		LF		LF

REINFORCED CONCRETE PIPE – TONGUE & GROOVE PIPE NIGP CODE: 658-68						
DESCRIPTION	CLASS III PRICE		CLASS IV PRICE		CLASS V PRICE	
12"		LF		LF		LF
15"		LF		LF		LF
18"		LF		LF		LF
24"		LF		LF		LF
30"		LF		LF		LF
36"		LF		LF		LF
42"		LF		LF		LF
48"		LF		LF		LF
54"		LF		LF		LF
60"		LF		LF		LF
72"		LF		LF		LF

REINFORCED POLYTHYLENE PIPE – 20 FOOT JOINTS NIGP CODE: 658-58		
DESCRIPTION	PRICE	
24"		LF
30"		LF
36"		LF
42"		LF
48"		LF
54"		LF
60"		LF
72"		LF
84"		LF
96"		LF

AWWA C900 PVC PLASTIC PRESSURE PIPE NIGP CODE: 658-56 PLASTIC PIPES OR NIGP CODE: 658-60 PVC PIPES						
DESCRIPTION	DR 14 PRICE		DR 18 PRICE		DR 25 PRICE	
4"		LF		LF		LF
6"		LF		LF		LF
8"		LF		LF		LF
10"		LF		LF		LF
12"		LF		LF		LF

AWWA C905 PVC PLASTIC WATER PIPE NIGP CODE: 658-56 PLASTIC PIPES OR NIGP CODE: 658-60 PVC PIPES									
DESCRIPTION	DR 18 PRICE		DR 25 PRICE		DR 32.5 PRICE		DR 41 PRICE		DR 51 PRICE	
14"		LF		LF		LF		LF		LF
16"		LF		LF		LF		LF		LF
18"		LF		LF		LF		LF		LF
24"		LF		LF		LF		LF		LF
30"		LF		LF		LF		LF		LF
36"		LF		LF		LF		LF		LF
42"		LF		LF		LF		LF		LF
48"		LF		LF		LF		LF		LF

SDR 26 AND SDR 35 GASKETED GRAVITY SANITARY SEWER PIPE NIGP CODE: 210-35 SEWER PIPE JOINT SEALING COMPOUND				
SIZE OF PIPE	SDR 26		SDR 35	
4"		LF		LF
6"		LF		LF
8"		LF		LF
10"		LF		LF
12"		LF		LF
15"		LF		LF

HIGH PERFORMANCE (HP) POLYPROPYLENE STORM PIPE		
DESCRIPTION	PRICE	
12"		LF
15"		LF
18"		LF
24"		LF
30"		LF
36"		LF
42"		LF
48"		LF
60"		LF

HIGH DESTINY POLYETHYLENE PIPE (HDPE) NIGP CODE: 658-58 Polyethylene Pipe And Fitting		
DESCRIPTION	PRICE	
4"		LF
6"		LF
8"		LF
10"		LF
12"		LF
15"		LF
18"		LF
24"		LF
30"		LF
36"		LF
42"		LF
48"		LF
54"		LF
60"		LF

PLUMBING PIPES – 20 FOOT SECTIONS NIGP CODE: 967-60	
PVC	PRICE
½"	
1 ½"	
2"	
3"	
4"	

PLUMBING PIPES – 20 FOOT SECTIONS NIGP CODE: 967-60	
COPPER	PRICE
½"	
¾"	

CATEGORY (B) – INLETS

NIGP CODE: 210-31

INLETS, AREA, SEWER DRAIN, PRECAST, CONCRETE, STORM DRAIN, **NO BOTTOM FLOORS**

DESCRIPTION	PRICE																
	2'	2 ½'	3'	3 ½'	4'	4 ½'	5'	5 ½'	6'	6 ½'	7'	7 ½'	8'	8 ½'	9'	9 ½'	10'
Type "A" Inlet (5' x 3')																	
Type "A-1" Inlet (5' x 4')																	
Type "A-2" Inlet (5' x 5')																	
Type "A-3" Inlet (5' x 6')																	
Type "A" (SPL-1) Inlet (5' x 3')																	
Type "A-1" (SPL-1) Inlet (5' x 4')																	
Type "A-2" (SPL-1) Inlet (5' x 5')																	
Type "A-3" (SPL-1) Inlet (5' x 6')																	
TYPE "C" INLET 2' X 2'																	
TYPE "C" INLET 3' X 3'																	
TYPE "C" INLET 4' X 4'																	
TYPE "CC" INLET 5' x 3'																	

Type "F" Inlet (W=3')																
Type "F-1" Inlet (W=4')																
Type "F-2" Inlet (W=5')																
Type "F-3" Inlet (W=6')																
Type "F" (SPL-1) Inlet (W=3')																
Type "F-1" (SPL-1) Inlet (W=4')																
Type "F-2" (SPL-1) Inlet (W=5')																
Type "F-3" (SPL-1) Inlet (W=6')																

CATEGORY (C) – MANHOLES, NO BOTTOM FLOORS

NIGP CODE: 890-30

MANHOLES

DESCRIPTION	PRICE														
	3'	3 ½'	4'	4 ½'	5'	5 ½'	6'	6 ½'	7'	7 ½'	8'	8 ½'	9'	9 ½'	10'
TYPE "A" MANHOLE															
TYPE "A-1" MANHOLE															
TYPE "M" MANHOLE															

CATEGORY (D) – MISCELLANEOUS

DESCRIPTION		
WATER VALVE	UNIT	PRICE
2"	EA	
4"	EA	
6"	EA	
8"	EA	
10"	EA	
90 DEGREE ELBOW		
2"	EA	
4"	EA	
6"	EA	
8"	EA	
10"	EA	
45 DEGREE ELBOW		
2"	EA	
4"	EA	
6"	EA	
8"	EA	
10"	EA	
STEEL PIPE CASING WITH SPACERS		
4"	LF	
6"	LF	
12"	LF	
16"	LF	
24"	LF	
FIRE HYDRANT W/VALVE	EA	
PVC SCHEDULE 40 WATER LINE DR 18		
2"	LF	
8"	LF	
PVC SCHEDULE 40		
1.5"	LF	
0.75"	LF	
0.5"	LF	
WATER SADDLE W/2' CORPORATE VALVE		
8" x 2"	EA	

HP Dual Wall Marmac Couplers		
PIPE SIZE	**PRICE**	**UNIT**
12"		EA
15"		EA
18"		EA
24"		EA
30"		EA
36"		EA
42"		EA
48"		EA
60"		EA

HP Dual Wall Fabricated Tees		
PIPE SIZE	**PRICE**	**UNIT**
12"		EA
15"		EA
18"		EA
24"		EA
30"		EA
36"		EA
42"		EA
48"		EA
60"		EA

HP Dual Wall Fabricated Bends						
PIPE SIZE	**11.25 Bend**	**22.5 Bend**	**30* Bend**	**45* Bend**	**90* Bend**	**Unit**
12"						EA
15"						EA
18"						EA
24"						EA
30"						EA
36"						EA
42"						EA
48"						EA
60"						EA

EXHIBIT "B" – BID PAGE
Hidalgo County (All funding sources, programs & entities)
"PIPES & Related Miscellaneous Items"
RFB No.: 2017-046-04-05-FAZ

BIDDER/COMPANY NAME:_____

ADDRESS: _____

CITY: _____ **STATE:** _____ **ZIPCODE:**_____

PHONE No:_____ **FAX No:** _____ **CELL №**_____

AUTHORIZED SIGNATURE:_____

PRINTED NAME: _____

TITLE: _____ **DATE:**_____

EMAIL:_____

EXHIBIT "C"

INSURANCE REQUIREMENTS

REQUEST FOR BIDS

Hidalgo County

(All funding sources, programs & entities)

"Pipes & Related Miscellaneous Items"

RFB No.: 2017-046-04-05-FAZ

EXHIBIT "C"

Insurance Requirements
Applicable to the Acquisition of Goods and /or Services
(other than Professional Services)

The Bidder awarded the contract shall furnish proof of insurance, which will also include any subcontractor that is subcontracted by the bidder in at least the following limits, to be in place prior to providing any services under this Contract and to continue at all times in force in effect during the term of this Contract:

1. A Five Hundred Thousand Dollar ($500,000.00) Comprehensive General Liability insurance policy providing additional coverage to all underlying liabilities of County.

2. Automobile liability insurance policy with limits of at least Three Hundred Thousand Dollars ($300,000.00) per person and Five Hundred Thousand Dollars ($500,000.00) per occurrence. Coverage should include injury to or death of persons and property damage claims with limits up to Five Hundred Thousand ($500,000.00) arising out of the services provided to County hereunder.

3. Uninsured/Underinsured motorist coverage in an amount equal to the bodily injury limits set forth immediately above;

4. Workers compensation insurance in amounts established by Texas law, unless the Bidder is specifically exempted from the Texas Workers Compensation Act, Texas Labor Code Chapter 401, et. seq.

Hidalgo County will only accept certificates of insurance on an Acord form (as attached hereto). Certificates of insurance naming County as an **additional insured** shall be submitted to County for approval prior to any services being performed by Contractor. Each policy of insurance required hereunder shall extend for a period equivalent to, or longer than the term of the Contract, and any insurer hereunder shall be required to give at least thirty (30) days written notice to the County prior to the cancellation of any such coverage on the termination date, or otherwise. This Contract shall be automatically suspended upon the cancellation, or other termination, of any required policy of insurance hereunder, and such suspension shall continue until evidence adequate replacement coverage is provided to County. If replacement coverage is not provided within thirty (30) days following suspension of the Contract, this Contract shall automatically terminate.

ACORD CERTIFICATE OF INSURANCE

DATE (MM/DD/YY)

PRODUCER	THIS CERTIFICATE IS ISSUED AS A MATTER OF INFORMATION ONLY AND CONFERS NO RIGHTS UPON THE CERTIFICATE HOLDER. THIS CERTIFICATE DOES NOT AMEND, EXTEND OR ALTER THE COVERAGE AFFORDED BY THE POLICIES BELOW.
	INSURERS AFFORDING COVERAGE
INSURED	INSURER A:
	INSURER B:
	INSURER C:
	INSURER D:
	INSURER E:

COVERAGES

THE POLICIES OF INSURANCE LISTED BELOW HAVE BEEN ISSUED TO THE INSURED NAMED ABOVE FOR THE POLICY PERIOD INDICATED. NOTWITHSTANDING ANY REQUIREMENT, TERM OR CONDITION OF ANY CONTRACT OR OTHER DOCUMENT WITH RESPECT TO WHICH THIS CERTIFICATE MAY BE ISSUED OR MAY PERTAIN, THE INSURANCE AFFORDED BY THE POLICIES DESCRIBED HEREIN IS SUBJECT TO ALL THER TERMS, EXCLUSIONS AND CONDITIONS OF SUCH POLICIES. AGGREGATE LIMITS SHOWN MAY HAVE BEEN REDUCED BY PAID CLAIMS.

INSR LTR	TYPE OF INSURANCE	POLICY NUMBER	POLICY EFFECTIVE DATE (MM/DD/YY)	POLICY EXPIRATION DATE (MM/DD/YY)	LIMITS	
A	**GENERAL LIABILITY** ☐ COMMERCIAL GENERAL LIABILITY ☐☐ CLAIMS MADE OCCUR ☐ OWNER'S & CONT. PROT ☐ OWNER'S PROTECTIVE LIABILITY GEN'L AGGREGATE LIMIT APPLIES PER: ☐ POLICY PROJECT ☐ LOC				EACH OCCURRENCE FIRE DAMAGE (Any one fire) MED (Any one person) PERS & ADV INJURY AL AGGREGATE ODUCTS – COMP/OP GG	$ $ $ $ $ $
B	**AUTOMOBILE LIABILITY** ☐ ANY AUTO ☐ ALL OWNED AUTOS ☐ SCHEDULED AUTOS ☐ HIRED AUTOS ☐ NON-OWNED AUTOS				COMBINED SINGLE LIMIT (Ea accident) BODILY INJURY (Per person) BODILY INJURY (Per accident) PROPERTY DAMAGE (Per accident)	$ $ $ $
	GARAGE LIABILITY ☐ ANY AUTO				AUTO ONLY-EA ACCIDENT OTHER THAN AUTO ONLY EA ACC AGG	$ $ $
C	**EXCESS LIABILITY** ☐ OCCUR ☐ CLAIM DE ☐ DEDUCTIBLE ☐ RETENTION $				EACH OCCURENCE AGGREGATE	$ $ $ $ $
D	**WORKERS COMPENSATION AND EMPLOYER'S LIABILIT**				WC STATU- ☐ OTHER TORY LIMITS E.L. EACH ACCIDENT E.L. DISEASE-EA EMPLOYEE E.L. DISEASE-POLICY LIMIT	$ $ $
	OTHER					

DESCRIPTION OF OPERATIONS / LOCATION / VEHICLES / EXCLUSIONS ADDED BY ENDORSEMENT / SPECIAL PROVISIONS

County of Hidalgo shall be named as additional insured on all Commercial General Liability policies.

CERTIFICATE HOLDER	ADDITIONAL INSURED; INSURER LETTER: _____ CANCELLATION
Hidalgo County **Attn: Purchasing Department** **2812 S Highway Bus. 281** **Edinburg, Texas 78539**	SHOULD ANY OF THE ABOVE DESCRIBED POLICIES BY CANCELLED BEFORE THE EXPIRATION DATE THEREOF, THE ISSUING INSURER WILL ENDEAVOR TO MAIL ***30*** DAYS WRITTEN NOTICE TO THE CERTIFICATE HOLDER NAMED TO THE LEFT, BUT FAILURE TO DO SO SHALL IMPOSE NO OBLIGATION OR LIABILITY OF ANY KIND UPON THE INSURER, ITS AGENTS OR REPRESENTATIVES. AUTHORIZED REPRESENTATIVE

SAMPLE

Insurance Requirement Acknowledgment

I, _____, authorized representative for _____,
Company/Vendor

hereby acknowledge receipt of the County's required insurance limits. Said requirements:

- will be acquired within 10 working days after notification from Purchasing Department of bid awarded by the Hidalgo County Commissioners' Court;
- will acquire additional amounts required to meet the County's requirements within 10 working days after notification from Purchasing Department of bid award by the Hidalgo County Commissioners' Court; currently carry the following:

  Automobile Liability: $_____ General Liability: $_____
- have already been met, see attached copy of insurance certificate.

_____ _____.
Authorized Representative Date

Notice to Bidder:
A certificate of insurance for the required insurance limits shall be provided to the Purchasing Department's Contract Managers in order to qualify for award of bid and to execute a contract between your Company and the County

Failure to provide Certificates of Insurance to the Purchasing Department's Contract Managers will cause the bid award to be rescinded and re-awarded to next lowest bidder. Certificates of Insurance will be monitored and verified on a **quarterly basis** to ensure coverage policy is in place. It is the Company's obligation to maintain the appropriate insurance coverage throughout the term of the contract.

THIS FORM MUST ACCOMPANY BID PACKET

PROJECT REQUIREMENTS ACKNOWLEDGMENT

This is to certify that I, _____, possess all of the APPLICABLE:

1. Licenses: _____.
2. Bond (if applicable)_____
3. Certificates: _____.
4. Permits: _____.
5. Other: _____.

necessary to carry out the required project. Furthermore, I am providing copies of the required documentation so that, if my company is awarded this bid, I may be eligible to enter into a contract with Hidalgo County and proceed to complete the project in a timely manner.

* Any licenses, bonds (if applicable),certificates, permits, etc. which are required must be presented as part of the bid packet in order to expedite the bid evaluation process.

_____ _____.
Authorized Signature Date

_____.
Company

_____.
Address

_____.
City, State, Zip

THIS FORM MUST ACCOMPANY BID PACKET

EXHIBIT "D"

CIQ FORM
CONFLICT OF INTEREST QUESTIONNAIRE

REQUEST FOR BIDS

Hidalgo County

(All funding sources, programs & entities)

"Pipes & Related Miscellaneous Items"

RFB No.: 2017-046-04-05-FAZ

CONFLICT OF INTEREST QUESTIONNAIRE

FORM CIQ

For vendor doing business with local governmental entity

This questionnaire reflects changes made to the law by H.B. 23, 84th Leg., Regular Session.

This questionnaire is being filed in accordance with Chapter 176, Local Government Code, by a vendor who has a business relationship as defined by Section 176.001(1-a) with a local governmental entity and the vendor meets requirements under Section 176.006(a).

By law this questionnaire must be filed with the records administrator of the local governmental entity not later than the 7th business day after the date the vendor becomes aware of facts that require the statement to be filed. *See* Section 176.006(a-1), Local Government Code.

A vendor commits an offense if the vendor knowingly violates Section 176.006, Local Government Code. An offense under this section is a misdemeanor.

OFFICE USE ONLY

Date Received

1 **Name of vendor who has a business relationship with local governmental entity.**

2 ☐ **Check this box if you are filing an update to a previously filed questionnaire.** (The law requires that you file an updated completed questionnaire with the appropriate filing authority not later than the 7th business day after the date on which you became aware that the originally filed questionnaire was incomplete or inaccurate.)

3 **Name of local government officer about whom the information is being disclosed.**

_____

Name of Officer

4 **Describe each employment or other business relationship with the local government officer, or a family member of the officer, as described by Section 176.003(a)(2)(A). Also describe any family relationship with the local government officer. Complete subparts A and B for each employment or business relationship described. Attach additional pages to this Form CIQ as necessary.**

A. Is the local government officer or a family member of the officer receiving or likely to receive taxable income, other than investment income, from the vendor?

☐ Yes ☐ No

B. Is the vendor receiving or likely to receive taxable income, other than investment income, from or at the direction of the local government officer or a family member of the officer AND the taxable income is not received from the local governmental entity?

☐ Yes ☐ No

5 **Describe each employment or business relationship that the vendor named in Section 1 maintains with a corporation or other business entity with respect to which the local government officer serves as an officer or director, or holds an ownership interest of one percent or more.**

6 ☐ Check this box if the vendor has given the local government officer or a family member of the officer one or more gifts as described in Section 176.003(a)(2)(B), excluding gifts described in Section 176.003(a-1).

7

_____ _____

Signature of vendor doing business with the governmental entity Date

CONFLICT OF INTEREST QUESTIONNAIRE
For vendor doing business with local governmental entity

A complete copy of Chapter 176 of the Local Government Code may be found at http://www.statutes.legis.state.tx.us/Docs/LG/htm/LG.176.htm. For easy reference, below are some of the sections cited on this form.

Local Government Code § 176.001(1-a): "Business relationship" means a connection between two or more parties based on commercial activity of one of the parties. The term does not include a connection based on:

(A) a transaction that is subject to rate or fee regulation by a federal, state, or local governmental entity or an agency of a federal, state, or local governmental entity;

(B) a transaction conducted at a price and subject to terms available to the public; or

(C) a purchase or lease of goods or services from a person that is chartered by a state or federal agency and that is subject to regular examination by, and reporting to, that agency.

Local Government Code § 176.003(a)(2)(A) and (B):

(a) A local government officer shall file a conflicts disclosure statement with respect to a vendor if:

***

(2) the vendor:

(A) has an employment or other business relationship with the local government officer or a family member of the officer that results in the officer or family member receiving taxable income, other than investment income, that exceeds $2,500 during the 12-month period preceding the date that the officer becomes aware that

(i) a contract between the local governmental entity and vendor has been executed; or

(ii) the local governmental entity is considering entering into a contract with the vendor;

(B) has given to the local government officer or a family member of the officer one or more gifts that have an aggregate value of more than $100 in the 12-month period preceding the date the officer becomes aware that:

(i) a contract between the local governmental entity and vendor has been executed; or

(ii) the local governmental entity is considering entering into a contract with the vendor.

Local Government Code § 176.006(a) and (a-1)

(a) A vendor shall file a completed conflict of interest questionnaire if the vendor has a business relationship with a local governmental entity and:

(1) has an employment or other business relationship with a local government officer of that local governmental entity, or a family member of the officer, described by Section 176.003(a)(2)(A);

(2) has given a local government officer of that local governmental entity, or a family member of the officer, one or more gifts with the aggregate value specified by Section 176.003(a)(2)(B), excluding any gift described by Section 176.003(a-1); or

(3) has a family relationship with a local government officer of that local governmental entity.

(a-1) The completed conflict of interest questionnaire must be filed with the appropriate records administrator not later than the seventh business day after the later of:

(1) the date that the vendor:

(A) begins discussions or negotiations to enter into a contract with the local governmental entity; or

(B) submits to the local governmental entity an application, response to a request for proposals or bids, correspondence, or another writing related to a potential contract with the local governmental entity; or

(2) the date the vendor becomes aware:

(A) of an employment or other business relationship with a local government officer, or a family member of the officer, described by Subsection (a);

(B) that the vendor has given one or more gifts described by Subsection (a); or

(C) of a family relationship with a local government officer.

VENDOR'S APPLICATION & W-9 FORM

REQUEST FOR BIDS

Hidalgo County

(All funding sources, programs & entities)

"Pipes & Related Miscellaneous Items"

RFB No.: 2017-046-04-05-FAZ

HIDALGO COUNTY
PURCHASING DEPARTMENT
Bidder/Vendor Application

Complete in print or type. Please return this application to the Hidalgo County Purchasing Department thru Facsimile: (956) 318-2629 or (956) 292-7612 in person or regular mail to: 2812 S. Business Hwy. 281 , Edinburg, Texas 78539 or email: purchasing@co.hidalgo.tx.us

Company Name: **Telephone No. ( )**
dba Name:
Legal Name:
Mailing Address : **Fax No. ( )**
Physical Address:
City, State, Zip **Tax I.D. No.**
Remit to Address : **City, State, Zip**
E-Mail Address:
Representative(s) Name(s) & Title(s)
Type of Organization (check one): _____ Individual _____ Partnership _____ Corporation _____Non-Profit _____ LLC _____ Sole Proprietor _____ Other, Specify **State Identification No._____ (Please attached completed W-9 form with this application)** **Federal Identification No. or (if individual) SS No.**
State of Incorporation: _____ Date:_____ Other:
Type of Business (check one): _____ Manufacturer _____ Wholesaler _____ Retailer _____ Broker _____ Distributor _____ Service Organization _____ Other, Specify
Name & Title of Person(s) Authorized to Sign Bids, Proposals, and/or Contracts:
Small and/or Disadvantaged Business Information (check application criteria) **Small Business:_____Disadvantaged Business (At Least 51% Ownership)** ☐ Less than 125,000 annual gross receipt ☐ Black American ☐ Native American ☐ Less than 250,000 annual gross receipt ☐ Hispanic American ☐ Women ☐ Less than 499,000 annual gross receipt ☐ Asian Pacific American ☐ Other ☐ More than 500,000 annual gross receipt **Have you been certified as a HUB or an MBE/WBE source?:** ☐ Yes ☐ No **Indicate Certification No.(s):_____ or are Certificate(s) attached?:** ☐ Yes ☐ No
What type of product(s) is/are solicited by your company?: **Would you like to be provided with specifications for procurements of such products?:** ☐ Yes ☐ No
To Be Completed by the County: Rec'd by (Purchasing):_____ Date Rec'd by (Purchasing): **Date Forwarded Information to Auditor's Office:_____Entry Date: _____ Vendor No.:**

Revised12/14/06

HISTORICALLY UNDERUTILIZED BUSINESS (HUB) DECLARATION

The primary objective of the Hidalgo County HUB Program is to ensure Historically Underutilized Businesses receive a fair and equal opportunity for participation in the County's procurement process. This fact holds true for Services (Professional & Non-Professional), Commodities, and Construction contracts and any subcontracts thereto. The program strongly encourages Prime Contractors to provide subcontracting opportunities to Certified Hub Contractors/Vendors. Our goal for HUB contractor/vendor participation, as well as HUB subcontractor participation is 30%. To be considered as a "Certified HUB Contractor/Vendor" the contractor/vendor must have been certified by, and hold a current and valid certification with any of the three agencies listed below.

Have you been Certified as a HUB or an MBE/WBE source?: ☐Yes ☐ No

If yes, by whom?: ☐ Texas Building & Procurement Commission ☐ Other_____

Indicate Certification No(s).:_____ or Are Certificate(s) Attached?: ☐ Yes ☐ No

---

LIST OF CERTIFIED HUB SUBCONTRACTORS

(Attach additional pages if necessary)

What percentage of the Bid, RFP,or RFQ is to be subcontracted with Certified HUB sources?: _____%
(List HUB Subcontractor information below).

HUB Subcontractor Name: _____ HUB Status:
Certifying Agency (Check all applicable): ☐Texas Building & Procurement Commission ☐ Other
Address: _____ City: _____ State: _____ Zip:
Contact Person: _____ Title: _____ Phone No.: ( )
Subcontract Amount: $_____ Description of Work to be Performed:

HUB Subcontractor Name: _____ HUB Status:
Certifying Agency (Check all applicable): ☐Texas Building & Procurement Commission ☐ Other
Address: _____ City: _____ State: _____ Zip:
Contact Person: _____ Title: _____ Phone No.: ( )
Subcontract Amount: $_____ Description of Work to be Performed:

HUB Subcontractor Name: _____ HUB Status:
Certifying Agency (Check all applicable): ☐Texas Building & Procurement Commission ☐ Other
Address: _____ City: _____ State: _____ Zip:
Contact Person: _____ Title: _____ Phone No.: ( )
Subcontract Amount: $_____ Description of Work to be Performed:

Form **W-9**
(Rev. December 2014)
Department of the Treasury
Internal Revenue Service

Request for Taxpayer Identification Number and Certification

Give Form to the requester. Do not send to the IRS.

Print or type
See Specific Instructions on page 2.

1 Name (as shown on your income tax return). Name is required on this line; do not leave this line blank.

2 Business name/disregarded entity name, if different from above

3 Check appropriate box for federal tax classification; check only **one** of the following seven boxes:

☐ Individual/sole proprietor or single-member LLC ☐ C Corporation ☐ S Corporation ☐ Partnership ☐ Trust/estate

☐ Limited liability company. Enter the tax classification (C=C corporation, S=S corporation, P=partnership) ▶ _____

Note. For a single-member LLC that is disregarded, do not check LLC; check the appropriate box in the line above for the tax classification of the single-member owner.

☐ Other (see instructions) ▶

4 Exemptions (codes apply only to certain entities, not individuals; see instructions on page 3):

Exempt payee code (if any) _____

Exemption from FATCA reporting code (if any) _____

(Applies to accounts maintained outside the U.S.)

5 Address (number, street, and apt. or suite no.)

Requester's name and address (optional)

6 City, state, and ZIP code

7 List account number(s) here (optional)

Part I Taxpayer Identification Number (TIN)

Enter your TIN in the appropriate box. The TIN provided must match the name given on line 1 to avoid backup withholding. For individuals, this is generally your social security number (SSN). However, for a resident alien, sole proprietor, or disregarded entity, see the Part I instructions on page 3. For other entities, it is your employer identification number (EIN). If you do not have a number, see *How to get a TIN* on page 3.

Note. If the account is in more than one name, see the instructions for line 1 and the chart on page 4 for guidelines on whose number to enter.

Social security number

			–		–				

or

Employer identification number

		–							

Part II Certification

Under penalties of perjury, I certify that:

1. The number shown on this form is my correct taxpayer identification number (or I am waiting for a number to be issued to me); and
2. I am not subject to backup withholding because: (a) I am exempt from backup withholding, or (b) I have not been notified by the Internal Revenue Service (IRS) that I am subject to backup withholding as a result of a failure to report all interest or dividends, or (c) the IRS has notified me that I am no longer subject to backup withholding; and
3. I am a U.S. citizen or other U.S. person (defined below); and
4. The FATCA code(s) entered on this form (if any) indicating that I am exempt from FATCA reporting is correct.

Certification instructions. You must cross out item 2 above if you have been notified by the IRS that you are currently subject to backup withholding because you have failed to report all interest and dividends on your tax return. For real estate transactions, item 2 does not apply. For mortgage interest paid, acquisition or abandonment of secured property, cancellation of debt, contributions to an individual retirement arrangement (IRA), and generally, payments other than interest and dividends, you are not required to sign the certification, but you must provide your correct TIN. See the instructions on page 3.

Sign Here | **Signature of U.S. person** ▶ | **Date** ▶

General Instructions

Section references are to the Internal Revenue Code unless otherwise noted.

Future developments. Information about developments affecting Form W-9 (such as legislation enacted after we release it) is at *www.irs.gov/fw9*.

Purpose of Form

An individual or entity (Form W-9 requester) who is required to file an information return with the IRS must obtain your correct taxpayer identification number (TIN) which may be your social security number (SSN), individual taxpayer identification number (ITIN), adoption taxpayer identification number (ATIN), or employer identification number (EIN), to report on an information return the amount paid to you, or other amount reportable on an information return. Examples of information returns include, but are not limited to, the following:

- Form 1099-INT (interest earned or paid)
- Form 1099-DIV (dividends, including those from stocks or mutual funds)
- Form 1099-MISC (various types of income, prizes, awards, or gross proceeds)
- Form 1099-B (stock or mutual fund sales and certain other transactions by brokers)
- Form 1099-S (proceeds from real estate transactions)
- Form 1099-K (merchant card and third party network transactions)
- Form 1098 (home mortgage interest), 1098-E (student loan interest), 1098-T (tuition)
- Form 1099-C (canceled debt)
- Form 1099-A (acquisition or abandonment of secured property)

Use Form W-9 only if you are a U.S. person (including a resident alien), to provide your correct TIN.

If you do not return Form W-9 to the requester with a TIN, you might be subject to backup withholding. See *What is backup withholding?* on page 2.

By signing the filled-out form, you:

1. Certify that the TIN you are giving is correct (or you are waiting for a number to be issued),
2. Certify that you are not subject to backup withholding, or
3. Claim exemption from backup withholding if you are a U.S. exempt payee. If applicable, you are also certifying that as a U.S. person, your allocable share of any partnership income from a U.S. trade or business is not subject to the withholding tax on foreign partners' share of effectively connected income, and
4. Certify that FATCA code(s) entered on this form (if any) indicating that you are exempt from the FATCA reporting, is correct. See *What is FATCA reporting?* on page 2 for further information.

Note. If you are a U.S. person and a requester gives you a form other than Form W-9 to request your TIN, you must use the requester's form if it is substantially similar to this Form W-9.

Definition of a U.S. person. For federal tax purposes, you are considered a U.S. person if you are:

- An individual who is a U.S. citizen or U.S. resident alien;
- A partnership, corporation, company, or association created or organized in the United States or under the laws of the United States;
- An estate (other than a foreign estate); or
- A domestic trust (as defined in Regulations section 301.7701-7).

Special rules for partnerships. Partnerships that conduct a trade or business in the United States are generally required to pay a withholding tax under section 1446 on any foreign partners' share of effectively connected taxable income from such business. Further, in certain cases where a Form W-9 has not been received, the rules under section 1446 require a partnership to presume that a partner is a foreign person, and pay the section 1446 withholding tax. Therefore, if you are a U.S. person that is a partner in a partnership conducting a trade or business in the United States, provide Form W-9 to the partnership to establish your U.S. status and avoid section 1446 withholding on your share of partnership income.

In the cases below, the following person must give Form W-9 to the partnership for purposes of establishing its U.S. status and avoiding withholding on its allocable share of net income from the partnership conducting a trade or business in the United States:

- In the case of a disregarded entity with a U.S. owner, the U.S. owner of the disregarded entity and not the entity;
- In the case of a grantor trust with a U.S. grantor or other U.S. owner, generally, the U.S. grantor or other U.S. owner of the grantor trust and not the trust; and
- In the case of a U.S. trust (other than a grantor trust), the U.S. trust (other than a grantor trust) and not the beneficiaries of the trust.

Foreign person. If you are a foreign person or the U.S. branch of a foreign bank that has elected to be treated as a U.S. person, do not use Form W-9. Instead, use the appropriate Form W-8 or Form 8233 (see Publication 515, Withholding of Tax on Nonresident Aliens and Foreign Entities).

Nonresident alien who becomes a resident alien. Generally, only a nonresident alien individual may use the terms of a tax treaty to reduce or eliminate U.S. tax on certain types of income. However, most tax treaties contain a provision known as a "saving clause." Exceptions specified in the saving clause may permit an exemption from tax to continue for certain types of income even after the payee has otherwise become a U.S. resident alien for tax purposes.

If you are a U.S. resident alien who is relying on an exception contained in the saving clause of a tax treaty to claim an exemption from U.S. tax on certain types of income, you must attach a statement to Form W-9 that specifies the following five items:

1. The treaty country. Generally, this must be the same treaty under which you claimed exemption from tax as a nonresident alien.
2. The treaty article addressing the income.
3. The article number (or location) in the tax treaty that contains the saving clause and its exceptions.
4. The type and amount of income that qualifies for the exemption from tax.
5. Sufficient facts to justify the exemption from tax under the terms of the treaty article.

Example. Article 20 of the U.S.-China income tax treaty allows an exemption from tax for scholarship income received by a Chinese student temporarily present in the United States. Under U.S. law, this student will become a resident alien for tax purposes if his or her stay in the United States exceeds 5 calendar years. However, paragraph 2 of the first Protocol to the U.S.-China treaty (dated April 30, 1984) allows the provisions of Article 20 to continue to apply even after the Chinese student becomes a resident alien of the United States. A Chinese student who qualifies for this exception (under paragraph 2 of the first protocol) and is relying on this exception to claim an exemption from tax on his or her scholarship or fellowship income would attach to Form W-9 a statement that includes the information described above to support that exemption.

If you are a nonresident alien or a foreign entity, give the requester the appropriate completed Form W-8 or Form 8233.

Backup Withholding

What is backup withholding? Persons making certain payments to you must under certain conditions withhold and pay to the IRS 28% of such payments. This is called "backup withholding." Payments that may be subject to backup withholding include interest, tax-exempt interest, dividends, broker and barter exchange transactions, rents, royalties, nonemployee pay, payments made in settlement of payment card and third party network transactions, and certain payments from fishing boat operators. Real estate transactions are not subject to backup withholding.

You will not be subject to backup withholding on payments you receive if you give the requester your correct TIN, make the proper certifications, and report all your taxable interest and dividends on your tax return.

Payments you receive will be subject to backup withholding if:

1. You do not furnish your TIN to the requester,
2. You do not certify your TIN when required (see the Part II instructions on page 3 for details),
3. The IRS tells the requester that you furnished an incorrect TIN,
4. The IRS tells you that you are subject to backup withholding because you did not report all your interest and dividends on your tax return (for reportable interest and dividends only), or
5. You do not certify to the requester that you are not subject to backup withholding under 4 above (for reportable interest and dividend accounts opened after 1983 only).

Certain payees and payments are exempt from backup withholding. See *Exempt payee code* on page 3 and the separate Instructions for the Requester of Form W-9 for more information.

Also see *Special rules for partnerships* above.

What is FATCA reporting?

The Foreign Account Tax Compliance Act (FATCA) requires a participating foreign financial institution to report all United States account holders that are specified United States persons. Certain payees are exempt from FATCA reporting. See *Exemption from FATCA reporting code* on page 3 and the Instructions for the Requester of Form W-9 for more information.

Updating Your Information

You must provide updated information to any person to whom you claimed to be an exempt payee if you are no longer an exempt payee and anticipate receiving reportable payments in the future from this person. For example, you may need to provide updated information if you are a C corporation that elects to be an S corporation, or if you no longer are tax exempt. In addition, you must furnish a new Form W-9 if the name or TIN changes for the account; for example, if the grantor of a grantor trust dies.

Penalties

Failure to furnish TIN. If you fail to furnish your correct TIN to a requester, you are subject to a penalty of $50 for each such failure unless your failure is due to reasonable cause and not to willful neglect.

Civil penalty for false information with respect to withholding. If you make a false statement with no reasonable basis that results in no backup withholding, you are subject to a $500 penalty.

Criminal penalty for falsifying information. Willfully falsifying certifications or affirmations may subject you to criminal penalties including fines and/or imprisonment.

Misuse of TINs. If the requester discloses or uses TINs in violation of federal law, the requester may be subject to civil and criminal penalties.

Specific Instructions

Line 1

You must enter one of the following on this line; **do not** leave this line blank. The name should match the name on your tax return.

If this Form W-9 is for a joint account, list first, and then circle, the name of the person or entity whose number you entered in Part I of Form W-9.

a. **Individual.** Generally, enter the name shown on your tax return. If you have changed your last name without informing the Social Security Administration (SSA) of the name change, enter your first name, the last name as shown on your social security card, and your new last name.

Note. ITIN applicant: Enter your individual name as it was entered on your Form W-7 application, line 1a. This should also be the same as the name you entered on the Form 1040/1040A/1040EZ you filed with your application.

b. **Sole proprietor or single-member LLC.** Enter your individual name as shown on your 1040/1040A/1040EZ on line 1. You may enter your business, trade, or "doing business as" (DBA) name on line 2.

c. **Partnership, LLC that is not a single-member LLC, C Corporation, or S Corporation.** Enter the entity's name as shown on the entity's tax return on line 1 and any business, trade, or DBA name on line 2.

d. **Other entities.** Enter your name as shown on required U.S. federal tax documents on line 1. This name should match the name shown on the charter or other legal document creating the entity. You may enter any business, trade, or DBA name on line 2.

e. **Disregarded entity.** For U.S. federal tax purposes, an entity that is disregarded as an entity separate from its owner is treated as a "disregarded entity." See Regulations section 301.7701-2(c)(2)(iii). Enter the owner's name on line 1. The name of the entity entered on line 1 should never be a disregarded entity. The name on line 1 should be the name shown on the income tax return on which the income should be reported. For example, if a foreign LLC that is treated as a disregarded entity for U.S. federal tax purposes has a single owner that is a U.S. person, the U.S. owner's name is required to be provided on line 1. If the direct owner of the entity is also a disregarded entity, enter the first owner that is not disregarded for federal tax purposes. Enter the disregarded entity's name on line 2, "Business name/disregarded entity name." If the owner of the disregarded entity is a foreign person, the owner must complete an appropriate Form W-8 instead of a Form W-9. This is the case even if the foreign person has a U.S. TIN.

Line 2

If you have a business name, trade name, DBA name, or disregarded entity name, you may enter it on line 2.

Line 3

Check the appropriate box in line 3 for the U.S. federal tax classification of the person whose name is entered on line 1. Check only one box in line 3.

Limited Liability Company (LLC). If the name on line 1 is an LLC treated as a partnership for U.S. federal tax purposes, check the "Limited Liability Company" box and enter "P" in the space provided. If the LLC has filed Form 8832 or 2553 to be taxed as a corporation, check the "Limited Liability Company" box and in the space provided enter "C" for C corporation or "S" for S corporation. If it is a single-member LLC that is a disregarded entity, do not check the "Limited Liability Company" box; instead check the first box in line 3 "Individual/sole proprietor or single-member LLC."

Line 4, Exemptions

If you are exempt from backup withholding and/or FATCA reporting, enter in the appropriate space in line 4 any code(s) that may apply to you.

Exempt payee code.

- Generally, individuals (including sole proprietors) are not exempt from backup withholding.
- Except as provided below, corporations are exempt from backup withholding for certain payments, including interest and dividends.
- Corporations are not exempt from backup withholding for payments made in settlement of payment card or third party network transactions.
- Corporations are not exempt from backup withholding with respect to attorneys' fees or gross proceeds paid to attorneys, and corporations that provide medical or health care services are not exempt with respect to payments reportable on Form 1099-MISC.

The following codes identify payees that are exempt from backup withholding. Enter the appropriate code in the space in line 4.

1—An organization exempt from tax under section 501(a), any IRA, or a custodial account under section 403(b)(7) if the account satisfies the requirements of section 401(f)(2)

2—The United States or any of its agencies or instrumentalities

3—A state, the District of Columbia, a U.S. commonwealth or possession, or any of their political subdivisions or instrumentalities

4—A foreign government or any of its political subdivisions, agencies, or instrumentalities

5—A corporation

6—A dealer in securities or commodities required to register in the United States, the District of Columbia, or a U.S. commonwealth or possession

7—A futures commission merchant registered with the Commodity Futures Trading Commission

8—A real estate investment trust

9—An entity registered at all times during the tax year under the Investment Company Act of 1940

10—A common trust fund operated by a bank under section 584(a)

11—A financial institution

12—A middleman known in the investment community as a nominee or custodian

13—A trust exempt from tax under section 664 or described in section 4947

The following chart shows types of payments that may be exempt from backup withholding. The chart applies to the exempt payees listed above, 1 through 13.

IF the payment is for . . .	THEN the payment is exempt for . . .
Interest and dividend payments	All exempt payees except for 7
Broker transactions	Exempt payees 1 through 4 and 6 through 11 and all C corporations. S corporations must not enter an exempt payee code because they are exempt only for sales of noncovered securities acquired prior to 2012.
Barter exchange transactions and patronage dividends	Exempt payees 1 through 4
Payments over $600 required to be reported and direct sales over $5,000[1]	Generally, exempt payees 1 through 5[2]
Payments made in settlement of payment card or third party network transactions	Exempt payees 1 through 4

[1] See Form 1099-MISC, Miscellaneous Income, and its instructions.

[2] However, the following payments made to a corporation and reportable on Form 1099-MISC are not exempt from backup withholding: medical and health care payments, attorneys' fees, gross proceeds paid to an attorney reportable under section 6045(f), and payments for services paid by a federal executive agency.

Exemption from FATCA reporting code. The following codes identify payees that are exempt from reporting under FATCA. These codes apply to persons submitting this form for accounts maintained outside of the United States by certain foreign financial institutions. Therefore, if you are only submitting this form for an account you hold in the United States, you may leave this field blank. Consult with the person requesting this form if you are uncertain if the financial institution is subject to these requirements. A requester may indicate that a code is not required by providing you with a Form W-9 with "Not Applicable" (or any similar indication) written or printed on the line for a FATCA exemption code.

A—An organization exempt from tax under section 501(a) or any individual retirement plan as defined in section 7701(a)(37)

B—The United States or any of its agencies or instrumentalities

C—A state, the District of Columbia, a U.S. commonwealth or possession, or any of their political subdivisions or instrumentalities

D—A corporation the stock of which is regularly traded on one or more established securities markets, as described in Regulations section 1.1472-1(c)(1)(i)

E—A corporation that is a member of the same expanded affiliated group as a corporation described in Regulations section 1.1472-1(c)(1)(i)

F—A dealer in securities, commodities, or derivative financial instruments (including notional principal contracts, futures, forwards, and options) that is registered as such under the laws of the United States or any state

G—A real estate investment trust

H—A regulated investment company as defined in section 851 or an entity registered at all times during the tax year under the Investment Company Act of 1940

I—A common trust fund as defined in section 584(a)

J—A bank as defined in section 581

K—A broker

L—A trust exempt from tax under section 664 or described in section 4947(a)(1)

M—A tax exempt trust under a section 403(b) plan or section 457(g) plan

Note. You may wish to consult with the financial institution requesting this form to determine whether the FATCA code and/or exempt payee code should be completed.

Line 5

Enter your address (number, street, and apartment or suite number). This is where the requester of this Form W-9 will mail your information returns.

Line 6

Enter your city, state, and ZIP code.

Part I. Taxpayer Identification Number (TIN)

Enter your TIN in the appropriate box. If you are a resident alien and you do not have and are not eligible to get an SSN, your TIN is your IRS individual taxpayer identification number (ITIN). Enter it in the social security number box. If you do not have an ITIN, see *How to get a TIN* below.

If you are a sole proprietor and you have an EIN, you may enter either your SSN or EIN. However, the IRS prefers that you use your SSN.

If you are a single-member LLC that is disregarded as an entity separate from its owner (see *Limited Liability Company (LLC)* on this page), enter the owner's SSN (or EIN, if the owner has one). Do not enter the disregarded entity's EIN. If the LLC is classified as a corporation or partnership, enter the entity's EIN.

Note. See the chart on page 4 for further clarification of name and TIN combinations.

How to get a TIN. If you do not have a TIN, apply for one immediately. To apply for an SSN, get Form SS-5, Application for a Social Security Card, from your local SSA office or get this form online at *www.ssa.gov*. You may also get this form by calling 1-800-772-1213. Use Form W-7, Application for IRS Individual Taxpayer Identification Number, to apply for an ITIN, or Form SS-4, Application for Employer Identification Number, to apply for an EIN. You can apply for an EIN online by accessing the IRS website at *www.irs.gov/businesses* and clicking on Employer Identification Number (EIN) under Starting a Business. You can get Forms W-7 and SS-4 from the IRS by visiting IRS.gov or by calling 1-800-TAX-FORM (1-800-829-3676).

If you are asked to complete Form W-9 but do not have a TIN, apply for a TIN and write "Applied For" in the space for the TIN, sign and date the form, and give it to the requester. For interest and dividend payments, and certain payments made with respect to readily tradable instruments, generally you will have 60 days to get a TIN and give it to the requester before you are subject to backup withholding on payments. The 60-day rule does not apply to other types of payments. You will be subject to backup withholding on all such payments until you provide your TIN to the requester.

Note. Entering "Applied For" means that you have already applied for a TIN or that you intend to apply for one soon.

Caution: *A disregarded U.S. entity that has a foreign owner must use the appropriate Form W-8.*

Part II. Certification

To establish to the withholding agent that you are a U.S. person, or resident alien, sign Form W-9. You may be requested to sign by the withholding agent even if items 1, 4, or 5 below indicate otherwise.

For a joint account, only the person whose TIN is shown in Part I should sign (when required). In the case of a disregarded entity, the person identified on line 1 must sign. Exempt payees, see *Exempt payee code* earlier.

Signature requirements. Complete the certification as indicated in items 1 through 5 below.

1. Interest, dividend, and barter exchange accounts opened before 1984 and broker accounts considered active during 1983. You must give your correct TIN, but you do not have to sign the certification.

2. Interest, dividend, broker, and barter exchange accounts opened after 1983 and broker accounts considered inactive during 1983. You must sign the certification or backup withholding will apply. If you are subject to backup withholding and you are merely providing your correct TIN to the requester, you must cross out item 2 in the certification before signing the form.

3. Real estate transactions. You must sign the certification. You may cross out item 2 of the certification.

4. Other payments. You must give your correct TIN, but you do not have to sign the certification unless you have been notified that you have previously given an incorrect TIN. "Other payments" include payments made in the course of the requester's trade or business for rents, royalties, goods (other than bills for merchandise), medical and health care services (including payments to corporations), payments to a nonemployee for services, payments made in settlement of payment card and third party network transactions, payments to certain fishing boat crew members and fishermen, and gross proceeds paid to attorneys (including payments to corporations).

5. Mortgage interest paid by you, acquisition or abandonment of secured property, cancellation of debt, qualified tuition program payments (under section 529), IRA, Coverdell ESA, Archer MSA or HSA contributions or distributions, and pension distributions. You must give your correct TIN, but you do not have to sign the certification.

What Name and Number To Give the Requester

For this type of account:	Give name and SSN of:
1. Individual	The individual
2. Two or more individuals (joint account)	The actual owner of the account or, if combined funds, the first individual on the account[1]
3. Custodian account of a minor (Uniform Gift to Minors Act)	The minor[2]
4. a. The usual revocable savings trust (grantor is also trustee) b. So-called trust account that is not a legal or valid trust under state law	The grantor-trustee[1] The actual owner[1]
5. Sole proprietorship or disregarded entity owned by an individual	The owner[3]
6. Grantor trust filing under Optional Form 1099 Filing Method 1 (see Regulations section 1.671-4(b)(2)(i)(A))	The grantor*
For this type of account:	**Give name and EIN of:**
7. Disregarded entity not owned by an individual	The owner
8. A valid trust, estate, or pension trust	Legal entity[4]
9. Corporation or LLC electing corporate status on Form 8832 or Form 2553	The corporation
10. Association, club, religious, charitable, educational, or other tax-exempt organization	The organization
11. Partnership or multi-member LLC	The partnership
12. A broker or registered nominee	The broker or nominee
13. Account with the Department of Agriculture in the name of a public entity (such as a state or local government, school district, or prison) that receives agricultural program payments	The public entity
14. Grantor trust filing under the Form 1041 Filing Method or the Optional Form 1099 Filing Method 2 (see Regulations section 1.671-4(b)(2)(i)(B))	The trust

[1] List first and circle the name of the person whose number you furnish. If only one person on a joint account has an SSN, that person's number must be furnished.

[2] Circle the minor's name and furnish the minor's SSN.

[3] You must show your individual name and you may also enter your business or DBA name on the "Business name/disregarded entity" name line. You may use either your SSN or EIN (if you have one), but the IRS encourages you to use your SSN.

[4] List first and circle the name of the trust, estate, or pension trust. (Do not furnish the TIN of the personal representative or trustee unless the legal entity itself is not designated in the account title.) Also see *Special rules for partnerships* on page 2.

*Note. Grantor also must provide a Form W-9 to trustee of trust.

Note. If no name is circled when more than one name is listed, the number will be considered to be that of the first name listed.

Secure Your Tax Records from Identity Theft

Identity theft occurs when someone uses your personal information such as your name, SSN, or other identifying information, without your permission, to commit fraud or other crimes. An identity thief may use your SSN to get a job or may file a tax return using your SSN to receive a refund.

To reduce your risk:

- Protect your SSN,
- Ensure your employer is protecting your SSN, and
- Be careful when choosing a tax preparer.

If your tax records are affected by identity theft and you receive a notice from the IRS, respond right away to the name and phone number printed on the IRS notice or letter.

If your tax records are not currently affected by identity theft but you think you are at risk due to a lost or stolen purse or wallet, questionable credit card activity or credit report, contact the IRS Identity Theft Hotline at 1-800-908-4490 or submit Form 14039.

For more information, see Publication 4535, Identity Theft Prevention and Victim Assistance.

Victims of identity theft who are experiencing economic harm or a system problem, or are seeking help in resolving tax problems that have not been resolved through normal channels, may be eligible for Taxpayer Advocate Service (TAS) assistance. You can reach TAS by calling the TAS toll-free case intake line at 1-877-777-4778 or TTY/TDD 1-800-829-4059.

Protect yourself from suspicious emails or phishing schemes. Phishing is the creation and use of email and websites designed to mimic legitimate business emails and websites. The most common act is sending an email to a user falsely claiming to be an established legitimate enterprise in an attempt to scam the user into surrendering private information that will be used for identity theft.

The IRS does not initiate contacts with taxpayers via emails. Also, the IRS does not request personal detailed information through email or ask taxpayers for the PIN numbers, passwords, or similar secret access information for their credit card, bank, or other financial accounts.

If you receive an unsolicited email claiming to be from the IRS, forward this message to *phishing@irs.gov*. You may also report misuse of the IRS name, logo, or other IRS property to the Treasury Inspector General for Tax Administration (TIGTA) at 1-800-366-4484. You can forward suspicious emails to the Federal Trade Commission at: *spam@uce.gov* or contact them at *www.ftc.gov/idtheft* or 1-877-IDTHEFT (1-877-438-4338).

Visit IRS.gov to learn more about identity theft and how to reduce your risk.

Privacy Act Notice

Section 6109 of the Internal Revenue Code requires you to provide your correct TIN to persons (including federal agencies) who are required to file information returns with the IRS to report interest, dividends, or certain other income paid to you; mortgage interest you paid; the acquisition or abandonment of secured property; the cancellation of debt; or contributions you made to an IRA, Archer MSA, or HSA. The person collecting this form uses the information on the form to file information returns with the IRS, reporting the above information. Routine uses of this information include giving it to the Department of Justice for civil and criminal litigation and to cities, states, the District of Columbia, and U.S. commonwealths and possessions for use in administering their laws. The information also may be disclosed to other countries under a treaty, to federal and state agencies to enforce civil and criminal laws, or to federal law enforcement and intelligence agencies to combat terrorism. You must provide your TIN whether or not you are required to file a tax return. Under section 3406, payers must generally withhold a percentage of taxable interest, dividend, and certain other payments to a payee who does not give a TIN to the payer. Certain penalties may also apply for providing false or fraudulent information.

CERTIFICATION REGARDING DEBARMENT

REQUEST FOR BIDS

Hidalgo County

(All funding sources, programs & entities)

"Pipes & Related Miscellaneous Items"

RFB No.: 2017-046-04-05-FAZ

Certification
Regarding Debarment, Suspension and Ineligibility

As is required by the Federal Regulations Implementing Executive Order 12549, Debarment and Suspension, 45 CFR Part 76, Government-wide Debarment and Suspension, the applicant certifies, to the best of his or her knowledge and belief, that both it and its principals:

a. Are not presently debarred, suspended, proposed for debarment, declared ineligible, or voluntarily excluded from participation in this transaction by any federal department or agency;

b. Have not within a three-year period preceding this bid proposal and/or application been convicted of or had a civil judgment rendered against them for commission of fraud or a criminal offense in connection with obtaining, attempting to obtain, or performing a public (federal, state, or local) transaction or contract under a public transaction, violation of federal or state antitrust statutes or commission of embezzlement, theft, forgery, bribery, falsification or destruction of records, making false statements, or receiving stolen property;

c. Are not presently indicted for or otherwise criminally or civilly charged by a government entity with commission of any of the offenses enumerated herein; and

d. Have not within a three-year period preceding this bid proposal and/or application had one or more public transactions terminated for cause or default.

Signature:_____
Print Name:_____
Title:_____
Telephone Number:_____
Date:_____

If the bidder is unable to certify to all of the statements in this Certification, such bidder should attach an explanation to this proposal.

EXHIBIT "G"

APPENDICES

APPENDIX A

During the performance of this contract, the contractor, for itself, its assignees, and successors in interest (hereinafter referred to as the "contractor") agrees as follows:

1. **Compliance with Regulations**: The contractor (hereinafter includes consultants)will comply with the Acts and the Regulations relative to Nondiscrimination in Federally-assisted programs of the U.S. Department of Transportation, the Federal Highway Administration, as they may be amended from time to time, which are herein incorporated by reference and made a part of this contract.

2. **Nondiscrimination**: The contractor, with regard to the work performed by it during the contract, will not discriminate on the grounds of race, color, or national origin in the selection and retention of subcontractors, including procurements of materials and leases of equipment. The contractor will not participate directly or indirectly in the discrimination prohibited by the Acts and the Regulations, including employment practices when the contract covers any activity, project, or program set forth in Appendix B of49 CFR Part 21.

3. **Solicitations for Subcontracts, Including Procurements of Materials and Equipment**: In all solicitations, either by competitive bidding, or negotiation made by the contractor for work to be performed under a subcontract, including procurements of materials, or leases of equipment, each potential subcontractor or supplier will be notified by the contractor of the contractor's obligations under this contract and the Acts and the Regulations relative to Nondiscrimination on the grounds of race, color, or national origin.

4. **Information and Reports**: The contractor will provide all information and reports required by the Acts, the Regulations, and directives issued pursuant thereto and will permit access to its books, records, accounts, other sources of information, and its facilities as may be determined by the Recipient or the Federal Highway Administration to be pertinent to ascertain compliance with such Acts, Regulations, and instructions. Where any information required of a contractor is in the exclusive possession of another who fails or refuses to furnish the information, the contractor will so certify to the Recipient or the Federal Highway Administration, as appropriate, and will set forth what efforts it has made to obtain the information.

5. **Sanctions for Noncompliance**: In the event of a contractor's noncompliance with the Nondiscrimination provisions of this contract, the Recipient will impose such contract sanctions as it or the Federal Highway Administration may determine to be appropriate, including, but not limited to:

   a. withholding payments to the contractor under the contract until the contractor complies; and/or
   b. cancelling, terminating, or suspending contract, in whole or in part.

6. **Incorporation of Provisions**: The contractor will include the provisions of paragraphs one through six in every subcontract, including procurements of materials and leases of equipment, unless exempt by the Acts, the Regulations and directives issued pursuant thereto. The contractor will take action with respect to any subcontract or procurement as the Recipient or the Federal Highway Administration may direct as a means of enforcing such provisions including sanctions for noncompliance. Provided, that if the contractor becomes involved in, or is threatened with litigation by a subcontractor, or supplier because of such direction, the contractor may request the Recipient to enter into any litigation to protect the interests of the Recipient. In addition, the contractor may request the United States to enter into the litigation to protect the interests of the United States.

APPENDIX B

CLAUSES FOR DEEDS TRANSFERRING UNITED STATES PROPERTY

The following clauses will be included in deeds effecting or recording the transfer of real property, structures, or improvements thereon, or granting interest therein from the United States pursuant to the provisions of Assurance 4:

NOW, THEREFORE, the U.S. Department of Transportation as authorized by law and upon the condition that the **COUNTY OF HIDALGO** will accept title to the lands and maintain the project constructed thereon in accordance with all applicable federal statutes, the Regulations for the Administration of all Department of Transportation programs, and the policies and procedures prescribed by the Federal Highway Administration of the U.S. Department of Transportation in accordance and in compliance with all requirements imposed by Title 49, Code of Federal Regulations, U.S. Department of Transportation, Subtitle A, Office of the Secretary, Part 21, Nondiscrimination in Federally-assisted programs of the U.S. Department of Transportation pertaining to and effectuating the provisions of Title VI of the Civil Rights Act of 1964 (78 Stat. 252; 42 U.S.C. § 2000d to 2000d-4), does hereby remise, release, quitclaim and convey unto the **COUNTY OF HIDALGO** all the right, title and interest of the U.S. Department of Transportation in and to said lands described in Exhibit 1 attached hereto and made a part hereof.

(HABENDUM CLAUSE)

TO HAVE AND TO HOLD said lands and interests therein unto **COUNTY OF HIDALGO** and its successors forever, subject, however, to the covenants, conditions, restrictions and reservations herein contained as follows, which will remain in effect for the period during which the real property or structures are used for a purpose for which Federal financial assistance is extended or for another purpose involving the provision of similar services or benefits and will be binding on the **COUNTY OF HIDALGO**, its successors and assigns.

The **COUNTY OF HIDALGO**, in consideration of the conveyance of said lands and interests in lands, does hereby covenant and agree as a covenant running with the land for itself, its successors and assigns, that (1) no person will on the grounds of race, color, or national origin, be excluded from participation in, be denied the benefits of, or be otherwise subjected to discrimination with regard to any facility located wholly or in part on, over ,or under such lands hereby conveyed [,] [and]* (2) that the **COUNTY OF HIDALGO** will use the lands and interests in lands and interests in lands so conveyed, in compliance with all requirements imposed by or pursuant to Title 49, Code of Federal Regulations, U.S. Department of Transportation, Subtitle A, Office of the Secretary, Part 21, Nondiscrimination in Federally-assisted programs of the U.S. Department of Transportation, Effectuation of Title VI of the Civil Rights Act of 1964, and as said Regulations and Acts may be amended[, and(3) that in the event of breach of any of the above-mentioned nondiscrimination conditions, the Department will have a right to enter or re-enter said lands and facilities on said land ,and that above described land and facilities will thereon revert to and vest in and become the absolute property of the U.S. Department of Transportation and its assigns as such interest existed prior to this instruction].*

(*Reverted clause and related language to be used only when it is determined that such a clause is necessary in order to make clear the purpose of Title VI.)

APPENDIX C

CLAUSES FOR TRANSFER OF REAL PROPERTY ACQUIRED OR IMPROVED UNDER THE ACTIVITY, FACILITY, OR PROGRAM

The following clauses will be included in deeds, licenses, leases, permits, or similar instruments entered into by the **COUNTY OF HIDALGO** pursuant to the provisions of Assurance 7(a):

A. The (grantee, lessee, permittee, etc. as appropriate) for himself/herself, his/her heirs, personal representatives, successors in interest, and assigns, as a part of the consideration hereof, does hereby covenant and agree [in the case of deeds and leases add "as a covenant running with the land"] that:

   1. In the event facilities are constructed, maintained, or otherwise operated on the property described in this (deed, license, lease, permit, etc.) for a purpose for which a U.S. Department of Transportation activity, facility, or program is extended or for another purpose involving the provision of similar services or benefits, the (grantee, licensee, lessee, permitted, etc.) will maintain and operate such facilities and services in compliance with all requirements imposed by the Acts and Regulations (as may be amended)such that no person on the grounds of race, color, or national origin, will be excluded from participation in, denied the benefits of, or be otherwise subjected to discrimination in the use of said facilities.

B. With respect to licenses, leases, permits, etc., in the event of breach of any of the above Nondiscrimination covenants, **COUNTY OF HIDALGO** will have the right to terminate the (lease, license, permit, etc.) and to enter, re-enter, and repossess said lands and facilities thereon, and hold the same as if the (lease, license, permit, etc.) had never been made or issued.*

C. With respect to a deed, in the event of breach of any of the above Nondiscrimination covenants, the **COUNTY OF HIDALGO** will have the right to enter or re-enter the lands and facilities thereon, and the above described lands and facilities will there upon revert to and vest in and become the absolute property of the **COUNTY OF HIDALGO** and its assigns.*

(*Reverted clause and related language to be used only when it is determined that such a clause is necessary in order to make clear the purpose of Title VI.)

APPENDIX D

CLAUSES FOR CONSTRUCTION/USE/ACCESS TO REAL PROPERTY ACQUIRED UNDER THE ACTIVITY, FACILITY OR PROGRAM

The following clauses will be included in deeds, licenses, permits, or similar instruments/agreements entered into by **COUNTY OF HIDALGO** pursuant to the provisions of Assurance 7(b):

A. The (grantee, licensee, permittee, etc., as appropriate) for himself/herself, his/her heirs, personal representatives, successors in interest, and assigns, as a part of the consideration hereof, does hereby covenant and agree (in the case of deeds and leases add, "as a covenant running with the land") that (1) no person on the ground of race, color ,or national origin, will be excluded from participation in, denied the benefits of, or be otherwise subjected to discrimination in the use of said facilities, (2) that in the construction of any improvements on, over, or under such land, and the furnishing of services thereon, no person on the ground of race, color, or national origin, will be excluded from participation in, denied the benefits of, or otherwise be subjected to discrimination, (3) that the (grantee, licensee, lessee, permittee, etc.) will use the premises in compliance with all other requirements imposed by or pursuant to the Acts and Regulations, as amended, set forth in this Assurance.

B. With respect to (licenses, leases, permits, etc.), in the event of breach of any of the above Nondiscrimination covenants, **COUNTY OF HIDALGO** will have the right to terminate the (license, permit, etc., as appropriate) and to enter or re-enter and repossess said land and the facilities thereon, and hold the same as if said(license, permit, etc., as appropriate) had never been made or issued.*

C. With respect to deeds, in the event of breach of any of the above Nondiscrimination covenants, **COUNTY OF HIDALGO** will there upon revert to and vest in and become the absolute property of **COUNTY OF HIDALGO** and its assigns.*

(*Reverted clause and related language to be used only when it is determined that such a clause is necessary in order to make clear the purpose of Title VI.)

APPENDIX E

During the performance of this contract, the contractor, for itself, its assignees, and successors in interest (hereinafter referred to as the "contractor") agrees to comply with the following nondiscrimination statutes and authorities; including but not limited to:

Pertinent Nondiscrimination Authorities:

- Title VI of the Civil Rights Act of 1964 (42 U.S.C. § 2000d et seq., 78 stat. 252), (prohibits discrimination on the basis of race, color, national origin); and 49CFR Part 21.
- The Uniform Relocation Assistance and Real Property Acquisition Policies Act of1970, (42U.S.C. § 4601), (prohibits unfair treatment of persons displaced or whose property has been acquired because of Federal or Federal-aid programs and projects);
- Federal-Aid Highway Act of 1973, (23U.S.C. § 324et seq.), (prohibits discrimination on the basis of sex);
- Section 504 of the Rehabilitation Act of 1973, (29U.S.C. § 794 et seq.), as amended, (prohibits discrimination on the basis of disability); and 49CFRPart 27;
- The Age Discrimination Act of 1975, as amended,(42U.S.C. § 6101 et seq.), (prohibits discrimination on the basis of age);
- Airport and Airway Improvement Act of 1982, (49U.S.C. § 4 71, Section 4 7123),as amended, (prohibits discrimination based on race, creed, color, national origin, or sex);
- The Civil Rights Restoration Act of 1987,(PL 100-209), (Broadened the scope, coverage and applicability of Title VI of the Civil Rights Act of 1964, The Age Discrimination Act of 1975 and Section 504 of the Rehabilitation Act of 1973, by expanding the definition of the terms "programs or activities" to include all of the programs or activities of the Federal-aid recipients, sub recipients and contractors, whether such programs or activities are Federally funded or not);
- Titles II and III of the Americans with Disabilities Act, which prohibit discrimination on the basis of disability in the operation of public entities, public and private transportation systems, places of public accommodation, and certain testing entities (42 U.S.C. §§ 12131-12189)as implemented by Department of Transportation regulations at 49C.F.R. parts 37 and 38;
- The Federal Aviation Administration's Nondiscrimination statute (49U.S.C. § 47123) (prohibits discrimination on the basis of race, color, national origin, and sex);
- Executive Order 12898, Federal Actions to Address Environmental Justice in Minority Populations and Low-Income Populations, which ensures discrimination against minority populations by discouraging programs, policies, and activities with disproportionately high and adverse human health or environmental effects on minority and low-income populations;
- Executive Order 13166, Improving Access to Services for Persons with Limited English Proficiency, and resulting agency guidance, national origin discrimination includes discrimination because of limited English proficiency (LEP). To ensure compliance with Title VI, you must take reasonable steps to ensure that LEP persons have meaningful access to your programs (70 Fed. Reg. at 74087 to 74100);
- Title IX of the Education Amendments of1972, as amended, which prohibits you from discriminating because of sex in education programs or activities (20 U .S.C. 1681 et seq).

HIDALGO COUNTY
(Including all funding sources, programs, and entities)
REQUEST FOR BIDS
"PIPES & RELATED MISCELLANEOUS ITEMS"

RFB No.: 2017-046-04-05-FAZ

RFB SUBMITTAL CHECK LIST

All forms listed below must be included in the RFB response.

Indicate with a check mark (✓) the Forms completed and included in this response:

_____ Page 8 of Legal Notice

_____ Exhibit "B" Bid Page

_____ Exhibit "C" Acknowledgement forms

_____ Exhibit "D" CIQ Form -Copy of Co. Clerk Recording fee receipt (if applicable)

_____ Exhibit "E" Vendor Bidder Applications and IRS form W-9

_____ Exhibit "F" Certification Regarding Debarment

_____ SAMS.gov Registration Acknowledgement www.sam.gov

_____ One (1) Original, Three (3) Copies of Bid(s) (see No. 2 of Legal Notice).

EXHIBIT “B”

BID PAGE

EXHIBIT "B" – BID PAGE
Hidalgo County (All funding sources, programs & entities)
"PIPES & Related Miscellaneous Items"
RFB No.: 2017-046-04-05-FAZ

CATEGORY (A) – PIPES

CORRUGATED POLYVINYL CHLORIDE (PVC) STORM SEWER PIPE

NIGP CODE: 665-89 Polyvinyl Chloride (PVC)

DESCRIPTION	PRICE	
12"		LF
15"		LF
18"	N/A	LF
24"		LF
30"		LF
36"		LF
42"		LF
48"		LF

CORRUGATED STEEL STORM SEWER PIPE

NIGP CODE: 210-29 Corrugated Galvanized Metal Pipe
(UNIT PRICE INCLUDES ONE GASKETED BAND CONNECTION FOR EVERY 20 FOOT JOINT)

DIAMETER	TYPE "IR"PIPE PRICE	TYPE "I" PIPE PRICE	TYPE "IA" PIPE PRICE	
12"				LF
15"				LF
18"				LF
24"				LF
30"				LF
36"				LF
42"				LF
48"			OPENED	LF
54"				LF
60"			9:55	LF
66"				LF
72"		N/A	4-5-17	LF
78"				LF
84"			Witnessed	LF
90"				LF
96"				LF
102"				LF
108"				LF
114"				LF
120"				LF
126"				LF
132"				LF
138"				LF
144"				LF

EXHIBIT "B" – BID PAGE
Hidalgo County (All funding sources, programs & entities)
"PIPES & Related Miscellaneous Items"
RFB No.: 2017-046-04-05-FAZ

REINFORCED CONCRETE PIPE – RUBBER GASKET JOINT PIPE NIGP CODE: 658-68							
DESCRIPTION	CLASS III PRICE		CLASS IV PRICE		CLASS V PRICE		
12"		LF		LF			LF
15"		LF		LF			LF
18"		LF		LF			LF
24"		LF		LF			LF
30"		LF	N/A	LF			LF
36"		LF		LF			LF
42"		LF		LF			LF
48"		LF		LF			LF
54"		LF		LF			LF
60"		LF		LF			LF
72"		LF		LF			LF

REINFORCED CONCRETE PIPE – TONGUE & GROOVE PIPE NIGP CODE: 658-68							
DESCRIPTION	CLASS III PRICE		CLASS IV PRICE		CLASS V PRICE		
12"		LF		LF			LF
15"		LF		LF			LF
18"		LF		LF			LF
24"		LF		LF			LF
30"		LF		LF			LF
36"		LF	N/A	LF			LF
42"		LF		LF			LF
48"		LF		LF			LF
54"		LF		LF			LF
60"		LF		LF			LF
72"		LF		LF			LF

REINFORCED POLYTHYLENE PIPE – 20 FOOT JOINTS NIGP CODE: 658-58		
DESCRIPTION	PRICE	
24"		LF
30"		LF
36"		LF
42"	N/A	LF
48"		LF
54"		LF
60"		LF
72"		LF
84"		LF
96"		LF

OPENED
9:55
4-5-17
Witnessed

EXHIBIT "B" – BID PAGE
Hidalgo County (All funding sources, programs & entities)
"PIPES & Related Miscellaneous Items"
RFB No.: 2017-046-04-05-FAZ

AWWA C900 PVC PLASTIC PRESSURE PIPE

NIGP CODE: 658-56 PLASTIC PIPES OR
NIGP CODE: 658-60 PVC PIPES

DESCRIPTION	DR 14 PRICE		DR 18 PRICE		DR 25 PRICE	
4"	$2.82	LF	$ 2.21	LF	$ 1.61	LF
6"	$ 5.52	LF	$ 4.39	LF	$ 3.20	LF
8"	$ 9.48	LF	$ 7.60	LF	$ 5.48	LF
10"	$ 14.42	LF	$ 11.42	LF	$ 8.30	LF
12"	$ 20.38	LF	$ 16.12	LF	$ 11.73	LF

AWWA C905 PVC PLASTIC WATER PIPE

NIGP CODE: 658-56 PLASTIC PIPES OR
NIGP CODE: 658-60 PVC PIPES

DESCRIPTION	DR 18 PRICE		DR 25 PRICE		DR 32.5 PRICE		DR 41 PRICE		DR 51 PRICE	
14"		LF		LF		LF		LF		LF
16"		LF		LF		LF		LF		LF
18"		LF		LF		LF		LF		LF
24"		LF		LF		LF		LF		LF
30"		LF		LF		LF		LF		LF
36"		LF		LF		LF		LF		LF
42"		LF		LF		LF		LF		LF
48"		LF		LF		LF		LF		LF

SDR 26 AND SDR 35 GASKETED GRAVITY SANITARY SEWER PIPE

NIGP CODE: 210-35
SEWER PIPE JOINT SEALING COMPOUND

SIZE OF PIPE	SDR 26		SDR 35	
4"	$ 1.22	LF	$ .91	LF
6"	$ 2.63	LF	$ 1.98	LF
8"	$ 4.74	LF	$ 3.55	LF
10"	$ 7.42	LF	$ 5.57	LF
12"	$ 10.57	LF	$ 8.00	LF
15"	$ 16.05	LF	$ 11.89	LF

OPENED 9:55 4-5-17 Witnessed

HIGH PERFORMANCE (HP) POLYPROPYLENE STORM PIPE

DESCRIPTION	PRICE	
12"	$ 7.27	LF
15"	$ 9.07	LF
18"	$ 11.97	LF
24"	$ 20.19	LF
30"	$ 31.39	LF
36"	$ 36.34	LF
42"	$ 46.45	LF
48"	$ 61.16	LF
60"	$ 95.87	LF

HIGH DESTINY POLYETHYLENE PIPE (HDPE) NIGP CODE: 658-58 Polyethylene Pipe And Fitting		
DESCRIPTION	PRICE	
4"	$.94	LF
6"	$ 2.33	LF
8"	$ 3.85	LF
10"	$ 5.40	LF
12"	$ 5.59	LF
15"	$ 8.55	LF
18"	$ 11.61	LF
24"	$ 18.00	LF
30"	$ 27.75	LF
36"	$ 34.92	LF
42"	$ 48.58	LF
48"	$ 53.87	LF
54"	N/A	LF
60"	$ 93.13	LF

PLUMBING PIPES – 20 FOOT SECTIONS NIGP CODE: 967-60	
PVC	PRICE
½"	
1 ½"	N/A
2"	
3"	
4"	

OPENED
9:55
4-5-17
Witnessed

PLUMBING PIPES – 20 FOOT SECTIONS NIGP CODE: ~~967-60~~	
COPPER	PRICE
~~½"~~	N/A
¾"	

CATEGORY (B) – INLETS

NIGP CODE: 210-31

INLETS, AREA, SEWER DRAIN, PRECAST, CONCRETE, STORM DRAIN, **NO BOTTOM FLOORS**

DESCRIPTION	PRICE																
	2'	2 ½'	3'	3 ½'	4'	4 ½'	5'	5 ½'	6'	6 ½'	7'	7 ½'	8'	8 ½'	9'	9 ½'	10'
Type "A" Inlet (5' x 3')																	
Type "A-1" Inlet (5' x 4')																	
Type "A-2" Inlet (5' x 5')																	
Type "A-3" Inlet (5' x 6')																	
Type "A" (SPL-1) Inlet (5' x 3')																	
Type "A-1" (SPL-1) Inlet (5' x 4')																	
Type "A-2" (SPL-1) Inlet (5' x 5')								N/A									
Type "A-3" (SPL-1) Inlet (5' x 6')																	
TYPE "C" INLET 2' X 2'																	
TYPE "C" INLET 3' X 3'																	
TYPE "C" INLET 4' X 4'																	
TYPE "CC" INLET 5' x 3'																	

OPENED 9:55
4-5-17
Witnessed

Type "F" Inlet (W=3')																	
Type "F-1" Inlet (W=4')																	
Type "F-2" Inlet (W=5')																	
Type "F-3" Inlet (W=6')																	
Type "F" (SPL-1) Inlet (W=3')								N/B									
Type "F-1" (SPL-1) Inlet (W=4')																	
Type "F-2" (SPL-1) Inlet (W=5')																	
Type "F-3" (SPL-1) Inlet (W=6')																	

CATEGORY (C) – MANHOLES, NO BOTTOM FLOORS

NIGP CODE: 890-30

MANHOLES

DESCRIPTION	PRICE														
	3'	3 ½'	4'	4 ½'	5'	5 ½'	6'	6 ½'	7'	7 ½'	8'	8 ½'	9'	9 ½'	10'
TYPE "A" MANHOLE															
TYPE "A-1" MANHOLE								N/B							
TYPE "M" MANHOLE															

Witnessed 4:54 p.m. OPENED 4:55

CATEGORY (D) – MISCELLANEOUS

DESCRIPTION		
WATER VALVE	UNIT	PRICE
2"	EA	$ 353.40
4"	EA	$ 453.38
6"	EA	$ 578.54
8"	EA	$ 921.48
10"	EA	$ 1436.85
90 DEGREE ELBOW		
2"	EA	
4"	EA	
6"	EA	
8"	EA	
10"	EA	
45 DEGREE ELBOW		
2"	EA	
4"	EA	
6"	EA	
8"	EA	
10"	EA	
STEEL PIPE CASING WITH SPACERS		N/A
4"	LF	
6"	LF	
12"	LF	
16"	LF	
24"	LF	
FIRE HYDRANT W/VALVE	EA	
PVC SCHEDULE 40 WATER LINE DR 18		
2"	LF	
8"	LF	
PVC SCHEDULE 40		
1.5"	LF	
0.75"	LF	
0.5"	LF	
WATER SADDLE W/2' CORPORATE VALVE		
8" x 2"	EA	$ 358.83

OPENED
9:55
4-5-17
Witnessed

EXHIBIT "B" – BID PAGE
Hidalgo County (All funding sources, programs & entities)
"PIPES & Related Miscellaneous Items"
RFB No.: 2017-046-04-05-FAZ

HP Dual Wall Marmac Couplers		
PIPE SIZE	**PRICE**	**UNIT**
12"	$43.44	EA
15"	$49.22	EA
18"	$60.54	EA
24"	$78.33	EA
30"	$95.61	EA
36"	$111.88	EA
42"	$124.58	EA
48"	$137.87	EA
60"	$225.86	EA

HP Dual Wall Fabricated Tees		
PIPE SIZE	**PRICE**	**UNIT**
12"	$164.61	EA
15"	$246.04	EA
18"	$345.14	EA
24"	$533.62	EA
30"	$1301.67	EA
36"	$1448.60	EA
42"	$1934.30	EA
48"	$2474.17	EA
60"	$4253.06	EA

OPENED
9:55
457
Witnessed

HP Dual Wall Fabricated Bends						
PIPE SIZE	**11.25 Bend**	**22.5 Bend**	**30* Bend**	**45* Bend**	**90* Bend**	**Unit**
12"	$70.63	$70.63	$78.96	$97.29	$85.68	EA
15"	$109.51	$109.51	$118.83	$134.20	$154.88	EA
18"	$148.99	$148.99	$163.42	$178.81	$217.28	EA
24"	$318.19	$323.38	$343.04	$365.18	$429.63	EA
30"	$440.46	$499.36	$575.12	$568.69	$732.59	EA
36"	$621.83	$711.77	$807.32	$771.28	$933.54	EA
42"	$784.11	$941.41	$972.80	$999.27	$1201.22	EA
48"	$960.58	$1178.41	$1219.59	$1243.32	$1308.42	EA
60"	$1428.44	$1895.09	$1851.18	$2099.39	$2428.54	EA

EXHIBIT "B" – BID PAGE
Hidalgo County (All funding sources, programs & entities)
"PIPES & Related Miscellaneous Items"
RFB No.: 2017-046-04-05-FAZ

BIDDER/COMPANY NAME: ACT Pipe & Supply

ADDRESS: 1004 N. Shary Rd

CITY: Mission STATE: TX ZIPCODE: 78572

PHONE No: (956) 583-1558 FAX No: (956) 580-4987 CELL No (956) 463-5889

AUTHORIZED SIGNATURE:

PRINTED NAME: Jorge Zavala

TITLE: Ops Manager DATE: 3/31/17

EMAIL: jzavala@actpipe.com

OPENED
9:55
4-5-17
Witnessed

EXHIBIT “C”

CERTIFICATE OF INSURANCE

CERTIFICATE OF LIABILITY INSURANCE

DATE (MM/DD/YYYY): 4/3/2017

THIS CERTIFICATE IS ISSUED AS A MATTER OF INFORMATION ONLY AND CONFERS NO RIGHTS UPON THE CERTIFICATE HOLDER. THIS CERTIFICATE DOES NOT AFFIRMATIVELY OR NEGATIVELY AMEND, EXTEND OR ALTER THE COVERAGE AFFORDED BY THE POLICIES BELOW. THIS CERTIFICATE OF INSURANCE DOES NOT CONSTITUTE A CONTRACT BETWEEN THE ISSUING INSURER(S), AUTHORIZED REPRESENTATIVE OR PRODUCER, AND THE CERTIFICATE HOLDER.

IMPORTANT: If the certificate holder is an ADDITIONAL INSURED, the policy(ies) must be endorsed. If SUBROGATION IS WAIVED, subject to the terms and conditions of the policy, certain policies may require an endorsement. A statement on this certificate does not confer rights to the certificate holder in lieu of such endorsement(s).

PRODUCER
Carroll Insurance Agency, Ltd.
14906 FM 529
Houston TX 77095

CONTACT NAME: Braxton Watson
PHONE (A/C, No, Ext): (281)656-3000 **FAX (A/C, No):** (281)656-3001
E-MAIL ADDRESS: service@carrollins.com

INSURER(S) AFFORDING COVERAGE	NAIC #
INSURER A : Phoenix Insurance Company	25623
INSURER B : Travelers Indemnity Co of America	25666
INSURER C : Travelers Indemnity Company of CT	25682
INSURER D :	
INSURER E :	
INSURER F :	

INSURED
ACT Pipe & Supply Inc
6950 W Sam Houston Pkwy N
Houston TX 77041-4023

COVERAGES **CERTIFICATE NUMBER:** 16-17 All Lines **REVISION NUMBER:**

THIS IS TO CERTIFY THAT THE POLICIES OF INSURANCE LISTED BELOW HAVE BEEN ISSUED TO THE INSURED NAMED ABOVE FOR THE POLICY PERIOD INDICATED. NOTWITHSTANDING ANY REQUIREMENT, TERM OR CONDITION OF ANY CONTRACT OR OTHER DOCUMENT WITH RESPECT TO WHICH THIS CERTIFICATE MAY BE ISSUED OR MAY PERTAIN, THE INSURANCE AFFORDED BY THE POLICIES DESCRIBED HEREIN IS SUBJECT TO ALL THE TERMS, EXCLUSIONS AND CONDITIONS OF SUCH POLICIES. LIMITS SHOWN MAY HAVE BEEN REDUCED BY PAID CLAIMS.

INSR LTR	TYPE OF INSURANCE	ADDL INSD	SUBR WVD	POLICY NUMBER	POLICY EFF (MM/DD/YYYY)	POLICY EXP (MM/DD/YYYY)	LIMITS	
A	X COMMERCIAL GENERAL LIABILITY CLAIMS-MADE / X OCCUR GEN'L AGGREGATE LIMIT APPLIES PER: POLICY X PRO-JECT LOC OTHER:			630-4246R291-PHX-16	10/1/2016	10/1/2017	EACH OCCURRENCE DAMAGE TO RENTED PREMISES (Ea occurrence) MED EXP (Any one person) PERSONAL & ADV INJURY GENERAL AGGREGATE PRODUCTS - COMP/OP AGG Project Aggregate	$ 1,000,000 $ 100,000 $ 5,000 $ 1,000,000 $ 2,000,000 $ 2,000,000 $ 2,000,000
B	AUTOMOBILE LIABILITY X ANY AUTO ALL OWNED AUTOS / SCHEDULED AUTOS HIRED AUTOS / NON-OWNED AUTOS X COMP $1000 X COLL $1000			810-4246R310-TIA	10/1/2016	10/1/2017	COMBINED SINGLE LIMIT (Ea accident) BODILY INJURY (Per person) BODILY INJURY (Per accident) PROPERTY DAMAGE (Per accident) 	$ 1,000,000 $ $ $ $
C	X UMBRELLA LIAB X OCCUR EXCESS LIAB / CLAIMS-MADE DED X RETENTION $ 10,000			CUP-4246R309-TCT-16	10/1/2016	10/1/2017	EACH OCCURRENCE AGGREGATE 	$ 15,000,000 $ 15,000,000 $
A	WORKERS COMPENSATION AND EMPLOYERS' LIABILITY ANY PROPRIETOR/PARTNER/EXECUTIVE OFFICER/MEMBER EXCLUDED? Y/N: N (N/A) (Mandatory in NH) If yes, describe under DESCRIPTION OF OPERATIONS below			UB-4246R28-A-16	10/1/2016	10/1/2017	X PER STATUTE / OTH-ER E.L. EACH ACCIDENT E.L. DISEASE - EA EMPLOYEE E.L. DISEASE - POLICY LIMIT	 $ 1,000,000 $ 1,000,000 $ 1,000,000

DESCRIPTION OF OPERATIONS / LOCATIONS / VEHICLES (ACORD 101, Additional Remarks Schedule, may be attached if more space is required)
RFB Bid No: 2017-046-04-05-FAZ "Pipes & Related Miscellaneous Items"

See attached Comments/Remark page (Form OFREMARK) for additional information.

CERTIFICATE HOLDER
rocio.villarreal@co.hidalg
Hidalgo County
Purchasing Dept
2812 S. Business Hwy 281
Edinburg, TX 78539

CANCELLATION
SHOULD ANY OF THE ABOVE DESCRIBED POLICIES BE CANCELLED BEFORE THE EXPIRATION DATE THEREOF, NOTICE WILL BE DELIVERED IN ACCORDANCE WITH THE POLICY PROVISIONS.

AUTHORIZED REPRESENTATIVE
D A. Carroll/HJENSE

© 1988-2014 ACORD CORPORATION. All rights reserved.

COMMENTS/REMARKS

The General Liability and Auto policies include a blanket additional insured endorsement provision that provides additional insured status to the certificate holder only when there is a written contract that requires such status. The contractual liability coverage provided by the General Liability is standard and may not cover all liabilities assumed by the named insured under its contract with the certificate holder.

The General Liability, Auto and Workers Compensation policy includes a blanket automatic waiver of subrogation endorsement that provides this feature only when there is a written contract between the named insured and certificate holder that requires it.

The policy includes a blanket notice of cancellation to certificate holders endorsement providing 30 days advanced notice if the policy is cancelled by the company other than for non payment of premium, 10 days notice after the policy is cancelled for nonpayment of premium. Notice is sent to certificate holders with mailing addresses on file with the agent or the company. The endorsement does not provide for notice of cancellation if the named insured requests cancellation.

Umbrella Follow Form: Any person or organization, other than the Named Insured, included as an additional insured under Schedule Underlying Insurance, but not for broader coverage than would be afforded by such Scheduled Underlying Insurance.

COPYRIGHT 2000, AMS SERVICES INC.

Zimbra **rocio.villarreal@co.hidalgo.tx.us**

RE: C-17-046B-06-13-ACT PIPE & SUPPLY

From : Steve Crain <scrain@atlashall.com> Mon, May 29, 2017 05:12 PM
Subject : RE: C-17-046B-06-13-ACT PIPE & SUPPLY
To : 'Rocio Villarreal' <rocio.villarreal@co.hidalgo.tx.us>

The Act contract is OK.

From: Rocio Villarreal [mailto:rocio.villarreal@co.hidalgo.tx.us]
Sent: Friday, May 26, 2017 1:43 PM
To: Steve Crain <scrain@atlashall.com>
Subject: C-17-046B-06-13-ACT PIPE & SUPPLY

Mr. Crain:

Please review and approve as to form.

Thank you.

ROCIO VILLARREAL
HIDALGO COUNTY PURCHASING DEPT.
CONTRACTS MANAGER
(956) 318-2626 Work
(956) 292-7000 Ext. 4868 Work
rocio.villarreal@co.hidalgo.tx.us
2812 S. Business Hwy 281
Edinburg, Texas 78539

REQUIREMENTS AGREEMENT
C-17-046B-05-30

THIS AGREEMENT (the "Agreement") is entered into effective as of the 30th day of May, 2017 by and between ACT Pipe & Supply, Inc. ("Seller") and Hidalgo County, Texas ("Buyer").

WHEREAS, Buyer has solicited sealed bids for the supply of its requirements of **Hidalgo County** for the **"Pipes and Misc. Items,"** (the "Product") for **HIDALGO COUNTY**, as further described in Exhibit "A", Request for Bids (RFB) Procurement Packet as attached hereto and incorporated herein by reference for all purposes (the "RFB") for a period of **one (1) year** and;

WHEREAS, Seller has submitted a proposal to supply Buyer's requirements; and

WHEREAS, Buyer has determine that Seller has submitted the lowest and best bid to meet Buyer's requirements for certain of the Products, as herein after described.

NOW THEREFORE, for and in consideration of the mutual covenants and conditions hereinafter set forth, and other good and valuable consideration, the receipt and sufficiency of which is hereby acknowledged, the parties hereto agree as follows:

1. Buyer agrees to purchase from Seller, and Seller agrees to sell and deliver to Buyer, all of the Products listed on Exhibit "B", which is attached hereto and incorporated herein by reference, that Buyer may require for use by Buyer in Hidalgo County projects for a period of a **one (1) year** with the County's option to extend/renew for an additional one (1) year period under the same rates, terms and conditions. Hidalgo County reserves the right to continue this bid for an additional sixty (60) day grace period, under the same rates, terms and conditions at the end of the contract term for unforeseen delays in award of new bid for the next contract term. This Contract shall commence on **June 30, 2017** and expire on **June 29, 2018** and it is agreed that the Products will meet the Specifications in the Request for Bids (RFB) Procurement Packet set forth in Exhibit "A" hereto.

2. When Buyer determines that it needs a quantity of the Products to be delivered, it will, according to its Purchasing Policies, complete and submit to Seller a Purchase Order describing the type and quantity of the Products required. The Products are to be delivered by Seller to the location in Hidalgo County specified by Buyer in its Purchase Order.

3. Buyer agrees to pay Seller for each Purchase Order based on the prices set out in Exhibit "B". Seller shall render invoices for each Purchase Order, and the invoices shall be paid by Buyer on or before the 30th day following receipt of the invoice.

4. General Provisions.

a. **Conflict with Applicable Law.** Nothing in this Agreement shall be

construed so as to require the commission of any act contrary to law, and whenever there is any conflict between any provision of this Agreement and any present or future law, ordinance or administrative, executive or judicial regulation, order or decree, or amendment thereof, contrary to which the parties have no legal right to contract, the latter shall prevail, but in such event the affected provision or provisions of this Agreement shall be modified only to the extent necessary to bring them within the legal requirements and only during the time such conflict exists.

b. **No Waiver.** No waiver by Buyer of any breach of any provision of this Agreement shall be deemed to be a waiver of any preceding or succeeding breach of the same or any other provision hereof.

c. **Entire Agreement.** This Agreement contains the entire contract between the parties hereto, and each party acknowledges that neither has made (either directly or through any agent or representative) any representations or agreements in connection with this Agreement not specifically set forth herein. This Agreement may be modified or amended only by agreement in writing executed by Buyer and Seller, and not otherwise.

d. **Texas Law to Apply.** This Agreement shall be construed under and in accordance with the laws of the State of Texas, and all obligations of the parties created hereunder are performable in Hidalgo County, Texas. The parties hereby consent to personal jurisdiction in Hidalgo County, Texas.

e. **Notice.** Except as may be otherwise specifically provided in this Agreement, all notices, demands, requests or communications required or permitted hereunder shall be in writing and shall either be (i) personally delivered against a written receipt, or (ii) sent by registered or certified mail, return receipt requested, postage prepaid and addressed to the parties at the addresses set forth below, or at such other addresses as may have been theretofore specified by written notice delivered in accordance herewith:

If to Buyer:	Hidalgo County Attention: County Judge 1615 South Closner, Suite J Edinburg, Texas 78539
If to Seller:	ACT Pipe & Supply, Inc. Attention: Jorge Zavala, Operation Manager 1004 N. Shary Rd Mission, Texas 78572

Each notice, demand, request or communication which shall be delivered or mailed in the manner described above shall be deemed sufficiently given for all purposes at such time as it is personally delivered to the addressee or, if mailed, at such time as it is deposited in the Unites States mail.

f. **Termination.** Buyer may terminate this Agreement at any time for any reason or no reason at all upon giving thirty (30) days written notice.

g. **Additional Documents.** The parties hereto covenant and agree that they will execute such other and further instruments and documents as are or may become necessary or convenient to effectuate and carry out the terms of this Agreement.

h. **Successors.** This Agreement shall be binding upon and inure to the benefit of the parties hereto and their respective heirs, executors, administrators, legal representatives, successors, and assigns where permitted by this Agreement.

i. **Assignment.** This Agreement shall not be assignable.

j. **Headings.** The headings and captions contained in this Agreement are solely for convenient reference and shall not be deemed to affect the meaning or interpretation of any provision or paragraph hereof.

k. **Gender and Number.** All pronouns used in this Agreement shall include the other gender, whether used in the masculine, feminine or neuter gender, and the singular shall include the plural whenever and as often as may be appropriate

l. **Authority to Execute.** The execution and performance of this Agreement by Buyer and Seller have been duly authorized by all necessary laws, resolutions or corporate action, and this Agreement constitutes the valid and enforceable obligations of Buyer and Seller in accordance with its terms.

m. **Insurance.** Seller shall provide, to the extend it deems necessary, insurance in force on all persons connected with providing services under this Contract naming Buyer as an additional insured, and shall furnish to Buyer certificates of such insurance coverage Exhibit "C", which is attached hereto.

n. **Commitment of Current Revenues Only**. In the event that, during any term hereof, the Commissioners Court of Buyer does not appropriate sufficient funds to meet the obligations of Buyer under this Agreement, Buyer may terminate this Agreement upon ninety (90) days written notice to Seller. Buyer agrees, however, to use reasonable efforts to secure funds necessary for the continued performance of this Agreement. The parties intend this provision to be a continuing right to terminate this Agreement at the expiration of each budget period of Buyer pursuant to the provisions of Tex. Loc. Govt. Code Ann. ' 271.903 (Vernon Supp. 1996).

o. **Purchasing Ethics**. Seller represents and warrants it has not, during the process of being awarded this contract violated the following ethical standards of Buyer and, upon and

after the execution of this Agreement, agrees to abide by the following ethical standards of Buyer:

(1) It shall be a breach of ethics to offer, give or agree to give any elected official, department head or employee, or former elected official, department head or employee, of Hidalgo County, or for any elected official, department head or employee or former elected official, department head or employee of Hidalgo County, to solicit, demand, accept or agree to accept from another person, entity or organization, a gratuity or an officer of employment in connection with any decision, approval, disapproval, recommendation, preparation or any part of a program requirement or purchase request, influencing the content of any specification or procurement standard, rendering of advise, investigation, auditing, or in any other advisory capacity in any proceeding or application, request for ruling, determination, claim or controversy, or other particular matter pertaining to any program requirement or a contract or subcontract, or to any solicitation or proposal therefore pending before any department or agency of Hidalgo County.

(2) It shall be a breach of ethics for any payment, gratuity or offer of employment to be made by or on behalf of a subcontractor under a contract to the prime contractor or higher tier subcontractor for any contract for Hidalgo County, or any person associated therewith, as an inducement for the award of a subcontract or order.

p. **Immunities.** Nothing in this Agreement is intended to and Buyer does not hereby waive, release or relinquish any right to assert any of the defenses Buyer enjoys by virtue of the state or federal constitution, laws, rules or regulations, and any soverign, official or qualified immunity available to Buyer as to any claim or action of any person, entity, or individual against Buyer.

EXECUTED effective as of the day and year first above written.

APPROVED AS TO FORM:
Atlas, Hall & Rodriguez, LLP

By: _____
Stephen L. Crain

COUNTY OF HIDALGO

By:_____
Ramon Garcia, County Judge

ATTEST:

_____
Arturo Guajardo Jr., County Clerk

ACT Pipe & Supply, Inc.

By:_____
Printed Name: _____
Title: _____

EXHIBIT “A”

REQUEST FOR SEALED BIDS (RFB) PROCUREMENT PACKET

Hidalgo County Purchasing Office
2812 S. Business Highway 281
Administration Building
Edinburg, Texas 78539
(956) 318-2626 / Fax: (956) 292-7612

March 20, 2017

Bidder's name

Address

City

State, Zip Code

Re: **HIDALGO COUNTY (All funding sources, programs & entities)**
Request for Bids - **"Pipes & Related Miscellaneous Items"**
RFB Bid No.: 2017-046-04-05-FAZ

Dear Gentleman/Ladies:

Enclosed, please find the Request for Bids (RFB) packet. **Modifications and new requirements** have been added and implemented. Carefully read and review all instructions, Requirements and Specifications.

Hidalgo County Purchasing Department welcomes and appreciates your participation in the Request for Bids process.

If any further assistance is required, please do not hesitate to call the Purchasing Department (956) 318-2626 x 4854.

Sincerely,

Martha L. Salazar, CPPB
Hidalgo County Purchasing Agent

MLS/faz
Enclosures

HIDALGO COUNTY PURCHASING OFFICE
2812 S. Business Highway 281
Administration Building
Edinburg, Texas 78539
(956) 318-2626 / Fax: (956) 292-7612

TABLE OF CONTENTS
REQUEST FOR BIDS (RFB)
HIDALGO COUNTY (All funding sources, programs & entities)
"Pipes & Related Miscellaneous Items"
RFB No.: 2017-046-04-05-FAZ

ITEM	DESCRIPTION	No. OF PAGES
1.	Request For Bid Letter	1
2.	Request for Bid, Legal Notice	8
3.	Exhibit A, Specifications	15
4.	Exhibit B, Bid Page	9
5.	Exhibit C, Insurance Requirements	4
6.	Exhibit D, (CIQ) Conflict of Interest Questionnaire (if applicable)	2
7.	Exhibit E, Vendor/Bidder Application and W-9 form(s)	6
8.	Exhibit F, Certification Regarding Debarment	1
9.	Exhibit G, Title VI Appendices "A" through "E"	6
10.	Draft Contract	8
11.	RFB Submittal Checklist	1

The above mentioned items shall be found in this Request for Bids-Goods/Products-RFB packet that is attached herewith. Should you find that any of the listed items are not attached in its entirety, please contact Purchasing by calling (956) 318-2626 or e-mail, to advise us of the missing documentation, and Purchasing will forward information either through facsimile, e-mail or by U.S. Mail.

Thank you.

Martha L Salazar
Martha L. Salazar, CPPB, Purchasing Agent

3-10-
Date

Revised 09/13/16

LEGAL NOTICE

REQUEST FOR BIDS

Hidalgo County

(All funding sources, programs & entities)

"Pipes & Related Miscellaneous Items"

RFB No.: 2017-046-04-05-FAZ

REQUEST FOR BIDS

HIDALGO COUNTY (All funding sources, programs & entities)

"Pipes & Related Miscellaneous Items"

BID OPENING DATE

APRIL 5, 2017

Contact Person:

Martha L. Salazar, CPPB, Purchasing Agent
Hidalgo County Purchasing Department
Physical Address: 2802 S. Business Hwy. 281 - Administration Building
Mailing/Postal Address: 2812 S. Business Hwy. 281
Edinburg, Texas 78539
(956) 318-2626

Form HCPD-03

1. Sealed bids will be received for **"HIDALGO COUNTY (All funding sources, programs & entities) - "*Pipes & Related Miscellaneous Items*"** in accordance with the specifications attached as **Exhibit "A"** hereto. Bids should address all specifications set forth. Bidders may suggest substitutions of features which they feel would be in the best interest of Hidalgo County ("County"). Strong rationale must be presented for any deviation from the specifications. Hidalgo County reserves the right to reject the deviation and its effect on the overall bid.

2. **One (1) original and Three (3) copies** of all bids are required with the bidders name and return address clearly typed and or/printed on upper left hand corner and the proper notation clearly typed/printed on the lower left hand corner of the envelope and/or package: **BID No.: 2017-046-04-05-FAZ "HIDALGO COUNTY (All funding sources, programs & entities) - *Pipes & Related Miscellaneous Items*"** and at County's Purchasing Department with a physical address: 2802 S. Business 281 and a mailing address: 2812 S. Business Hwy 281, Administration Building, Edinburg, Texas, **on or before 9:30 A.M, WEDNESDAY, APRIL 5, 2017. NO FACSIMILES, EMAILS OR LATE ARRIVALS WILL BE ACCEPTED. ANY RFB RECEIVED AFTER THAT TIME WILL NOT BE OPENED AND WILL BE RETURNED. OVERNIGHT MAIL MUST ALSO BE PROPERLY LABELED ON THE OUTSIDE OF EXPRESS ENVELOPE OR PACKAGE WITH REFERENCE TO** RFB No.: **2017-046-04-05-FAZ "HIDALGO COUNTY (All funding sources, programs & entities) - *Pipes & Related Miscellaneous Items*"** Hidalgo County reserves the right to refuse and reject any/all bids and to waive any/all formalities or technicalities, or to accept the bids considered the best and most advantageous to Hidalgo County.

   Additionally, all forms listed below must be properly executed and included with your bid:

   1. Legal Notice (See page 8);
   2. Bid Page – Procurement Form – Areas of Specialization (See **Exhibit "B"**);
   3. Insurance pages with Acknowledgment Forms (See **Exhibit "C"**);
   4. Form CIQ-Conflict of Interest Questionnaire (See **Exhibit "D"**);
   5. Vendor Bidder Application & W-9 forms (See **Exhibit "E"**);
   6. Certification Regarding Debarment (See **Exhibit "F"**); and
   7. SAMS.gov Registration Acknowledgement (See Number 18 below).

3. Hidalgo County reserves the right to: A. separate and accept, or eliminate any item(s) listed under this bid that it deems necessary to accommodate budgetary and/or operational requirements; B. reject any or all bids submitted and further reserves the right to design the evaluation criteria to be used in selecting the lowest and best bid for approval; C. award the bid to one bidder or to multiple bidders if the County determines it is in its best interest to do so; D. award the contract to the responsible bidder who submits the lowest and best bid. "Lowest and best" means a bid or offer providing the best value considering associated direct and indirect costs, including transport, maintenance, reliability, and life cycle, warranties, and customer service after a sale.

4. The Bidder shall not substitute items named in the bid without the express written consent of Hidalgo County. Failure of the delivered item to perform as specified or failure to meet the stated delivery schedule shall release Hidalgo County from all obligations to the contracting party with regard to the item(s) in question. In such event, County may elect to award the contract to the next-lowest responsible bidder, or to reject all bids and re-advertise.

5. For work to be performed at a County owned or operated location, each bidder shall, in its sole discretion, visit the job site before preparing the bid and thoroughly familiarize himself/herself with existing conditions. Bidder should take field dimensions and note all circumstances which affect the dollar amount of the bid.

6. Descriptive specifications are referenced in this document to indicate the general kind and quality of equipment desired by Hidalgo County. Due to various styles and models of equipment, bidders are required to include illustrations, specifications, explanation of warranties, and service data with their bid including catalogue numbers and any necessary references.

7. No bid may be withdrawn within thirty (30) days from the scheduled time to open bids.

8. Proposed prices are to remain firm for a minimum of ninety (90) days after bid opening.

9. Any interpretations, amendments, corrections or changes to this bid document must be in a written addendum and signed by the County Judge or his designee. Addenda will be mailed to all who are known to have received a copy of the Request for Bids. Bidders shall acknowledge receipt of all addenda as a part of their bid.

10. County reserves the right to accept or reject any or all Bids.

11. Costs are to be net F.O.B., County Prepaid.

12. County is exempt from Federal Excise Tax, State Tax and Local Tax. Do Not include tax in cost figure. If it is determined that tax was included in the cost figures it will not be included in the tabulation of any awards. Tax exemption certificates will be furnished upon request.

13. Funds for this procurement have been provided through the County budget for this fiscal year only. County, on an annual basis, has the right to reconsider a contract during the budget process for ensuing years if financial resources of County are insufficient to meet the liabilities of said contract. The award of a bid or contract hereunder will not be construed to create a debt of the County which is payable out of funds beyond the current fiscal year.

14. Upon award and prior to execution of a contract, Sole Proprietorships are required to submit a copy of their social security cards to the Hidalgo County Auditor's Office in order to establish an account with the County. All awarded vendors must submit a completed W-9 and a copy of their Federal ID Number Certificate.

15. DELIVERY INSTRUCTIONS:
    - No deliveries accepted after 3:00 P.M., Monday-Friday.
    - At least seventy two (72) hours prior notice of delivery must be given to Martha L. Salazar, Purchasing Agent before delivery will be accepted.
    - If you need additional information call the office listed below:

      Hidalgo County Purchasing Department
      Martha L. Salazar, Purchasing Agent
      (956) 318-2626

16. BILLING AND PAYMENT INSTRUCTIONS:
    - Invoices must include:
      a) Name and address of successful bidder
      b) Name and address of receiving department or official
      c) Purchase Order Number (if any)
      d) Notation - "HIDALGO COUNTY (All funding sources, programs & entities) -RFB No.: 2017-046-04-05-FAZ "*Pipes & Related Miscellaneous Items*"

Descriptive information as to the items or services delivered, including product code, item number, quantity, etc.

e) Contract number must be indicated on all invoices

- Discount payments will be considered when offered.
- Contact person for Billing and Payment questions:

Hidalgo County Auditor's Office
2808 S. Business Hwy 281
Edinburg, TX 78539
(956) 318-2511

17. SCHEDULE OF EVENTS

Bid Opening, 9:30 A.M.	**APRIL 5, 2017**
Award of Contract	**, 2017**
Commence Work or Deliver Products	**, 2017**

18. BID OR PERFORMANCE BOND AND DEBARMENT CERTIFICATION; PAYMENT UNDER CONTRACT:

. If the contract proposed is for the construction of public works or is for a contract for goods & services exceeding $100,000, all bidders shall furnish a good and sufficient bid bond in the amount of five percent of the total contract price. A bid bond must be executed with a surety company authorized to do business in Texas. All bidders are also required to furnish a certification or acknowledgment stating that the contractor or vendor is free from suspension or debarment pursuant to federal regulation 45CFR Part 76. Register at SAMs System for Award Management @ www.sam.gov.

. Together with the signing of a contract or issuance of a purchase order following the acceptance of a bid, and prior to commencement of the actual work, the bidder shall furnish a performance bond to the County for the full amount of the contract, if that contract exceeds $50,000.

. If the contract is for $50,000 or less, no money will be paid to the contractor until completion and acceptance of the work or the fulfillment of the purchase obligation to the County, and, if applicable, the receipt by County of satisfactory evidence that all subcontractors and material men have been paid.

. If a contract is for the construction, alteration or repair of public buildings or public works, the contractor *shall* provide a payment bond for a contract in excess of Twenty Five Thousand Dollars ($25,000.00), as required by Tex. Govt. Code Ch. 2253.

For requirements contracts, bond requirements are determined by applying the proposed unit price to the estimated quantities included in the specifications.

19. TITLE VI NOTICE/ N ,DISCRIMATION

a. "The County of Hidalgo, in accordance with the provisions of Title VI of the Civil Rights Act of 1964 (78 Stat.252, 42 U.S.C. §§2000d to 2000d-4) and the Regulations, hereby notifies all bidders that it will affirmatively ensure that any contract entered into pursuant to this advertisement, disadvantaged business enterprises will be afforded full and fair opportunity to submit bids in response to this invitation and will not be discriminated against on the grounds of race, color, or national origin in consideration for an award."

b. The appropriate clauses of Appendices "A" through "E" as delineated in the USDOT Standard Title VI/Nondiscrimination Assurances - Specific Assurances are hereby incorporated by reference as applicable. Title VI Appendices "A" through "E" are attached as **Exhibit "G.**

c. Bidder will attach all applicable notices to which it is obligated to provide or submit as part of the bid, including Form FHWA 1273 to be submitted by all contractors and subcontractors in relation to construction contracts.

20. ETHICAL STANDARDS:

. It shall be a breach of ethics to offer, give or agree to give any elected official, department head or employee, or former elected official, department head or employee, of the County, or for any elected official, department head or employee or former elected official, department head or employee of the County, to solicit, demand, accept or agree to accept from another person, entity or organization, a gratuity or an offer of employment in connection with any decision, approval, disapproval, recommendation, preparation or any part of a program requirement or purchase request, influencing the content of any specification or procurement standard, rendering of advice, investigation, auditing, or in any other advisory capacity in any proceeding or application, request for ruling, determination, claim or controversy, or other particular matter pertaining to any program requirement or a contract or subcontract, or to any solicitation or proposal therefore pending before any department or agency of the County.

. It shall be a breach of ethics for any payment, gratuity or offer of employment to be made by or on behalf of a subcontractor under a contract to the prime contractor or higher tier subcontractor for any contract for the County, or any person associated therewith, as an inducement for the award of a subcontract or order.

. No public official shall have an interest in a contract awarded hereunder except in accordance with Tex. Loc. Govt. Code Chapter 171.

NOTICE:
ALL COMMUNICATIONS BY A VENDOR TO THE COUNTY, ITS OFFICIALS, AND DEPARTMENT HEADS REGARDING THIS PROCUREMENT SHALL BE DONE THROUGH THE HIDALGO COUNTY PURCHASING DEPARTMENT.

21. DISCLOSURE OF CONFLICT OF INTEREST

. Effective January 1, 2016, Chapter 176 of the Texas Local Government Code requires that any vendor, person, consultant or contractor considering doing business with Hidalgo County ("the County") to disclose in the Conflict of Interest Questionnaire (the "CIQ") attached as Exhibit E, the vendor, person, consultant or contractor's affiliation or business relationship that might cause a conflict of interest with the County. By law, the CIQ must be filed with the Hidalgo County Clerk's Office no later than the seventh business day after the date the person becomes aware of facts that require that statement to be filed. The disclosure requirement applies to a person or business who contracts or seeks to contract with Hidalgo County for the

sale or purchase of property, goods or service. Any purchase order or contract resulting from this process shall be considered null and void if the successful bidder fails to comply with Texas Local Government Code Chapter 176. Vendors, consultants, contractors and others who desire to conduct business with Hidalgo County are encouraged to refer to Texas Local Government Code Chapter 176 for the details of this law. An offense under Texas Local Government Code Chapter 176 is a Class C Misdemeanor.

Completed Form CIQ must be submitted to the Hidalgo County Clerk's Office located at 100 N. Closner, Edinburg, Texas 78539 - Hidalgo County Courthouse.

COMPLETION AND SUBMISSION OF FORM CIQ IS THE SOLE RESPONSIBILITY OF THE PROSPECTIVE RESPONDENT. QUESTIONS REGARDING COMPLIANCE SHOULD BE DIRECTED TO YOUR LEGAL COUNSEL.

22. CERTIFICATE OF INTERESTED PARTIES (FORM HB1295)

As of January 1, 2016, to comply with Texas Government Code Section §2252.908, and the rules issued by the Texas Ethics Commission found in Title 1, Section 46.1, 46.3 and 46.5 of the Texas Administrative Code, we have updated and revised our RFB packet. In accordance with these requirements, business must submit a completed Certificate of Interested Parties Form 1295 to the County before the County may enter into a contract with the business entity. In box 3 of Form 1295, you will provide the RFB Project No. (2017-046), as shown on the packet. Once completed and filed with the Texas Ethics Commission, Form 1295 must be printed and signed in the presence of a notary and submitted to our office either by facsimile transmission to (956) 292-7612 or via email to: matilde.faz@co.hidalgo.tx.us. Hidalgo County cannot enter into a contract until Form 1295 is submitted. Therefore, failure to timely submit Form 1295 signed and notarized may result in delay of award. Full instructions for completion and submittal of Form 1295 may be found on the Texas Ethics Commission website:

https://www.ethics.state.tx.us/tec/1295-Info.htm

THE AWARDED VENDOR WILL HAVE THIRTY (30) DAYS FROM THE DATE THE HIDALGO COUNTY COMMISSIONER'S COURT APPROVES THIS AGREEMENT TO SUBMIT THE SIGNED NOTARIZED FORM 1295. *HIDALGO COUNTY CANNOT ENTER INTO A CONTRACT UNTIL FORM 1295 IS SUBMITTED.*

23. If, during the life of any contract or bid awarded, the successful bidder's net prices generally available to other customers for items awarded herein are reduced below the contracted price, it is understood and agreed that the benefits of such reduction shall be extended to the County.

24. Bids, and all goods and services provided hereunder, shall comply with all federal, state and local laws concerning this type(s) of goods and/or services.

25. Minimum Standards for Responsible Prospective Bidders: A prospective bidder must affirmatively demonstrate bidder's responsibility. A prospective bidder, by submitting a bid, represents to County that it meets the following requirements:
    - Possess or is able to obtain adequate financial resources as required to perform under the bid;
    - Be able to comply with the required or proposed delivery schedule;
    - Have a satisfactory record of performance;
    - Have a satisfactory record of integrity and ethics;
    - Be otherwise qualified and eligible to receive an award.

26. Successful bidder will pay or cause to be paid, without cost or expenses to County, all FICA, FUTA/SUTA and Federal Income Withholding Taxes of all employees, and all wages and benefits as required by Federal or State law. Successful bidder's officers, agents and/or employees will not be entitled to any benefits of an employee or elected official of County, including, but not limited to, benefits associated with County's civil service system.

27. Any contract award to a successful bidder will be in effect until (a) the contract expires, (b) delivery and acceptance of products, and/or performance of services ordered, or (c) terminated by County with thirty day's written notice prior to cancellation.

28. County reserves the right to enforce performance of any contract awarded hereunder in any manner prescribed by law or deemed to be in the best interest of the County in the event of breach or default by successful bidder; County reserves the right to terminate any contract immediately in the event a successful bidder fails to:

    A. Meet schedules;
    B. Pay any required fees or taxes; or
    C. Otherwise perform in accordance with the specifications.

29. Successful bidder shall defend, indemnify and save harmless County and all its elected officials, officers, agents and employees from all suits, actions, or other claims of any character, name and description brought for or on account of any injuries or damages received or sustained by any person, persons, or property on account of any negligent act or fault of the successful bidder, or of any agent, employee, subcontractor or supplier of successful bidder in the execution of, or performance under, any contract which may result from bid award or which arises from any event or casualty happening on or within County premises themselves or happening upon or in any halls, elevators, entrances, stairways or approaches of or to such County facilities. Successful bidder shall pay any judgment with costs which may be obtained against county growing out of such injury or damages, and shall, upon request, provide a defense to County by counsel reasonably acceptable to County. Successful bidder's indemnity hereunder shall include, but is not limited to, claims relating to patent, copyright or trademark infringement, and the like, arising out of the goods and services provided by successful bidder.

30. Successful bidder shall warrant that all items/services shall conform to the specifications and/or all warranties provided under the Uniform Commercial Code and be free from all defects in material, workmanship and the like. Items supplied under a contract pursuant to this Request for Bids shall be subject to County's approval. Items found to be defective or not meeting specifications shall be replaced by successful bidder within two business days at no expense to County. Items not picked up within one (1) week after notification shall be deemed a donation to County and may be used or disposed of at County's discretion and without waiver of any other rights of County as to the item's nonconformity.

31. This document and any disputes arising hereunder shall be governed and construed according to the laws of the State of Texas, and will be performable exclusively in Hidalgo County, Texas.

32. The successful bidder shall not assign, sell, transfer or convey its rights under any awarded contract, in whole or in part, without the prior written consent of County.

LEGAL NOTICE

Bid

For

HIDALGO COUNTY (All funding sources, programs & entities)

"Pipes & Related Miscellaneous Items"

BID No.: 2017-046-04-05-FAZ

To: Martha L. Salazar, CPPB, Purchasing Agent
Physical Address: 2802 S. Business Hwy. 281 - Administration Building
Mailing/Postal Address: 2812 S. Business Hwy. 281
Edinburg, Texas 78539

In accordance with the Specifications, and subject to all laws and regulations of the United States and state and local laws, the undersigned bidder proposes and commits to furnish all labor, equipment, material, software and services as set forth in the documents hereinbefore mentioned. The undersigned bidder further agrees, upon acceptance of its bid, to execute a contract and/or Purchase Order issued by Hidalgo County for performing and completing the work described in the Specifications within the time stated and for the prices proposed in the documents attached hereto and made a part hereof.

Bidder acknowledges receipt of all of the pages of the documents referenced in the Invitation to Bid Checklist presented in connection with this procurement. Bidder understands that Hidalgo County reserves the right to reject any or all bids and further reserves the right to design the evaluation criteria to be used in selecting the lowest and best bid.

Bidder agrees that this bid shall be good and may not be withdrawn for a period of ninety (90) calendar days after the scheduled closing time for receiving bids, as contained in the Specifications.

Respectfully submitted,

Bidder: _____

Address: _____

By: _____

Printed Name: _____

Title: _____

EXHIBIT "A"

SPECIFICATIONS/REQUIREMENTS

REQUEST FOR BIDS

Hidalgo County

(All funding sources, programs & entities)

"Pipes & Related Miscellaneous Items"

RFB No.: 2017-046-04-05-FAZ

SPECIFICATIONS AND/OR REQUIREMENTS:

Bidder(s) shall supply, where needed (on an "as needed" basis) in Hidalgo County or job site, **"PIPES, Inlets, Manholes & Miscellaneous Items".**

Bid information will be furnished to all Hidalgo County departments requiring pipes and **delivery** will involve numerous locations within Hidalgo County.

I. LOCATIONS – Departments requiring pipes.

II. DELIVERY INSTRUCTIONS
Delivery hours will be arranged with each department requiring pipes. **Bidder(s) shall deliver** the amount of product requested to **location or job site** required within 24 hours, or earlier, if requested. Bidder(s) agree(s) that, to the extent an item is unavailable from bidder's own inventory; bidder(s) will be responsible for locating an alternative supplier and for providing the product to Hidalgo County for the bid price. **VENDOR(S) MUST UNLOAD ANY/ALL ITEMS LISTED AT THE REQUESTED SITE(S).**

III. BID AWARD

1. Hidalgo County may award the bid on a lump sum basis to one (1) bidder or to multiple bidders on an item by item basis in each category, whichever is in the best interest of the County. For evaluation and consideration of items bid, samples will be submitted upon request. Categories will be as follows:

   - Category A: Pipes
   - Category B: Inlets
   - Category C: Manholes
   - Category D: Miscellaneous

CATEGORY (A) – PIPES
CORRUGATED PVC STORM SEWER PIPE SPECIFICATION

1.0 SCOPE:
Polyvinyl chloride (PVC) storm sewer/drain pipe and fitting shall be manufactured and tested in accordance with AASHTO Specifications M304.

2.0 MATERIAL AND DESIGN
The structural design of thermoplastic pipes shall be in accordance with AASHTO Standard Specifications for Highway Bridge; Section 8 titled "Soil-Thermoplastic Pipe Interaction Systems". To ensure long-term design strength properties, PVC Pipe shall be manufactured from 12454B or 12454C cell class material per ASTM D1784.

3.0 JOINING SYSTEM:
Joints may be either plastic sleeve with gaskets or an integral bell-gasket joint. When the joint is assembled, it shall prevent misalignment of adjacent pipes and form either a soil (2 psi hydrostatic test per AASHTO Standard Specifications for Highway Bridges: Section 26.4.2.4) or watertight joint (10.8 psi test per ASTM D3212 "Standard Specifications for Joints for Drain and Sewer Plastic Pipes Using Flexible Elastomeric Seals" as required.

4.0 INSTALLATION
PVC thermoplastic pipe and fittings manufactured to these specifications shall be installed in accordance with ASTM D2321-89.

Heights of Cover

DIAMETER	CORRUGATED PVC PIPE (AASHTO M304)
INCHES	FEET
12	49
15	47
18	51
24	50
30	50

*Minimum cover (H-20 live load) = (ASTM D2321 with Class A1 embedment)

CORRUGATED STEEL STORM SEWER PIPE SPECIFICATIONS

1.0 GENERAL
This item shall govern the furnishings of corrugated steel pipe and pipe-arch for culverts and storm sewer for the types, sizes and designations as specified in these specifications.

2.0 MATERIALS
This pipe shall be fabricated from sheets conforming to the current AASHTO M-274 (ASTM A819) specification for ALUMINIZED STEEL Type 2 material or the current AASHTO M-246 (ASTM 742) specification for POLYMER coated galvanized steel material.

3.0 MANUFACTURE
This pipe shall meet the requirements of AASHTO M-36 (ASTM A760) for corrugated steel pipe. All pipe shall be manufactured with a minimum of two-re-rolled annular ends.

4.0 CLASSIFICATION (TYPE) FOR DIAMETERS 46" THROUGH 96"
This pipe shall be manufactured to conform to the current AASHTO M-36 (ASTM A 760) specification and shall have an extended helical corrugation pattern of ¾ x ¾" 7 ½" as described in AASHTO M-36 (ASTM A 760).

All round pipe shall be manufactured to conform to the current AASHTO M 245 (ASTM A 762 & A 760) specification and shall have a full circular cross section with a smooth steel liner and helically corrugated shell, integrally attached at helical lock seams. All round pipe shall conform to the Type IA pipe classification. All pipe arches shall conform to the Type IIA classification.

Type I pipe classifications will also be considered. These pipes shall be manufactured out of ALUMINIZED STEEL Type 2 or POLYMER coated galvanized steel as referenced above.

5.0 POST APPLIED COATING
All Pipes manufactured with ALUMINIZED STEEL Type 2 shall be fully coated both inside and out with a minimum thickness of 0.05 in. (1.3 mm) measured from the crest of the corrugations, on the top of ribs, (as in Type IR pipe) or on the smooth inside surface of the pipe. The coating shall be uniform Class B (bituminous) or Class M (mastic) material as described in AASHTO M-190 (ASTM A 849).

6.0 GAUGE
Unless otherwise specified on the specifications, gauges shall be minimum as follows:

TYPE IR (SPIRAL CORRUGATION)	
DIAMETER	GAUGE
36-48"	16
54-60"	14
66-96"	12
TYPE I (STANDARD)	
54-138"	12
144"	10
All Types IA shall be 12 gauge shell and 18 gauge liner.	

7.0 COUPLING BANDS

Coupling bands shall be of the same base material and coating as the pipe. Coupling bands shall lap evenly on each of the pipes being connected and shall fit securely into at least one full circumferential corrugation to form a tightly closed joint.

All pipes shall be field jointed with corrugated locking bands. Connecting bands shall be drawn together by means of not less than two bolts not less than ½ in. (13 mm) diameter through angles or bar and strap device suitable welded or riveted.

Coupling bands shall be no more than three normal sheet thickness lighter than the pipe to be connected and in no case thinner than 0.052 in. (1.32 mm).

8.0 INSTALLATION

Corrugated steel pipe shall be installed as outlined in AASHTO Standard Specifications for Highway Bridges, Section 26 and ASTM A798.

9.0 MEASUREMENT

Corrugated steel pipe will be measured by linear foot. Such measurements shall be made between the ends of the barrel along its central axis. Where spurs or branches, or connections to existing pipe lines are involved, measurements of the spur or new connecting pipe will be made from the intersection of the central axis with the outside surface of the pipe into which it connects. Where inlets, headwalls, catch basins, manholes, junction chambers or other structures are included in lines of pipe that length of pipe tying into the other structure wall will be included for measurement but no other portion of the structure length or width will be included.

For multiple pipes, the measured length will be the sum of the lengths of the barrels, measured as prescribed above.

In the event of a change in design which either increases or decreases the quantity of pipe, the variation in quantity will be measured as prescribed above and the quantity shown in the specifications will be increased or decreased as the case may be.

10.0 PAYMENT

Payment for corrugated steel pipe, measured as prescribed above will be made at the contract unit price bid per linear foot for various sizes, gauges and types of corrugated steel pipe.

Payments shall be full compensation for furnishings, transporting and installing the pipe. This includes materials, labor, equipment, tools and incidentals necessary to complete the installation in accordance to these specifications.

CATEGORY (A) – PIPES
REINFORCED CONCRETE PIPE - GASKET JOINT PIPE SPECIFICATIONS

REINFORCED CONCRETE PIPE - GASKET JOINT PIPE SPECIFICATIONS						
CLASS III - ASTM C76 STANDARDS						
PIPE I.D.	WALL THICKNESS	CONCRETE STRENGTH	CAGE			PIPE WEIGHT
(in)	(in)	(PSI)	TYPE	INNER	OUTER	(LBS)
15	3.00	4,000	SINGLE	3"x6"-W1.75/W2.5		1,520
18	3.25					1,920
24	3.75					2,840
30	4.25			3"x6"-W2.5/W2.5		4,020
36	4.75		DOUBLE		3"x6"-W1.75/W2.5	5,520
42	5.25			3"x8"-W3.0/W2.0		7,100
48	5.75			3"x6"-W4.0/W2.5	3"x6"-W2.5/W2.5	8,280
54	6.25			3"x8"-W5.25/W2.5	3"x6"-W3.5/W2.5	9,800
60	6.75			2"x6"-W4.5/W2.5	3"x6"-W4.0/W2.5	12,184
72	7.75			2"x6"-W6.0/W2.5	3"x8"-W5.75/W3.0	15,900

REINFORCED CONCRETE PIPE - GASKET JOINT PIPE SPECIFICATIONS						
CLASS IV - ASTM C76 STANDARDS						
PIPE I.D.	WALL THICKNESS	CONCRETE STRENGTH	CAGE			PIPE WEIGHT
(in)	(in)	(PSI)	TYPE	INNER	OUTER	(LBS)
15	3.00	4,000	SINGLE	3"x6"-W2.5/W2.5		1,520
18	3.25					1,920
24	3.75			3"x6"-W3.5/W2.5		2,840
30	4.25			3"x6"-W4.0/W2.5		4,020
36	4.75		DOUBLE	3"x6"-W3.5/W2.5	3"x6"-W2.0/W2.0	5,520
42	5.25			3"x8"-W5.0/W2.5	3"x6"-W3.0/W2.5	7,100
48	5.75			3"x6"-W6.5/W3.0	3"x6"-W4.0/W2.5	8,280
54	6.25			2"x8"-W5.75/W3.0	3"x8"-W5.0/W2.5	9,800
60	6.75	5,000		2"x8"-W7.0/W3.0	3"x6"-W6.25/W3.0	12,184
72	7.75			2"x8"-W10.0/W4.0	2"x8"-W6.0/W2.5	15,900

REINFORCED CONCRETE PIPE - GASKET JOINT PIPE SPECIFICATIONS						
CLASS V - ASTM C76 STANDARDS						
PIPE I.D.	WALL THICKNESS	CONCRETE STRENGTH	CAGE			PIPE WEIGHT
(in)	(in)	(PSI)	TYPE	INNER	OUTER	(LBS)
15	3.00	6,000	SINGLE	3"x6"-W2.5/W2.5		1,520
18	3.25					1,920
24	3.75		DOUBLE	3"x6"-W3.0/W2.5	3"x6"-W2.5/W2.5	2,840
30	4.25			3"x6"-W4.5/W2.5	3"x6"-W3.0/W2.5	4,020
36	4.75			2"x6"-W4.5/W2.5	3"x6"-W4.0/W2.5	5,520
42	5.25			2"x8"-W6.0/W2.5	3"x8"-W5.75/W3.0	7,100
48	5.75			2"x8"-W8.0/W3.5	3"x8"-W7.0/W3.0	8,280
54	6.25			2"x8"-W10.0/W4.0	2"x8"-W6.0/W2.5	9,800
60	6.75			2"x8"-W11.5/W4.5	2"x8"-W7.0/W3.0	12,184
72	7.75			2"x6"-W8.5/W6.5	2"x8"-W10.0/W4.0	15,900

General Note:

1. Concrete gasket pipe shall meet Bureau of Reclamation R-4 Joint O-Ring gasket ASTM C361 Standards and price quote shall be included with the pipes.
2. All welded Wire Fabric Steel shall meet ASTM 82 and ASTM 185 Standards.
3. Aggregates shall meet ASTM C 33 Standards.
4. Fly Ash shall meet ASTM C 618-97 Standards.
5. Type II Cement shall meet ASTM C 150 Standards.
6. The maximum lengths of pipe sections shall be 8 feet.

The following are the technical requirements for the Reinforced Gasket Joint Concrete Pipe ASTM C-76 Class III.

D.1 GENERAL:
Pipe shall be manufactured and tested according to ASTM Designation: C-361 except as hereinafter changed and further specified. The requirements for cement, admixture, concrete strength, wall thickness, joints, manufacture and handling of pipe shall be in accordance with Paragraphs C-2, C-3, C-4, C-5, C-6, C-7, C-8, C-10, C-11, C-12, C-13 and C-14, respectively.

D.2 STEEL REINFORCEMENTS:
The reinforcing steel shall conform to requirements of Class III reinforced pipe, ASTM Designation: C-76. Reinforcements may be circular or elliptical.

D-3 PHYSICAL TEST REQUIREMENTS:
The test for internal hydrostatic pressure on the pipe shall not be less than that shown in Table "A" Paragraph C-10 thereof. The test for minimum 3-edge bearing load (pounds per linear foot) shall not be less than that required for Class III reinforced concrete pipe, ASTM Designation C-76.

RELATED PARAGRAPHS C-2 CEMENT:
The cement shall be Type II, low alkali in accordance with Federal Specifications SS-C 1960/3. The Contractor shall furnish certificates from the mill manufacturing the cement evidencing compliance with these specifications.

C-3 ADMIXTURE:
All concrete in concrete pipe placed by the placing and vibrated method shall have air-entraining agent conforming to ASTM Designations: C260. The amount of air-entraining agent used shall be such as will effect the entrainment of 2-1/2 $\pm$ 1 percent of air by volume, of the concrete as discharged from the mixer. Natural cement, slag cement, pozzolon or other mixtures shall not be added to the concrete without the written authorization of the Engineer in charge of the project.

C-4 CONCRETE STRENGTH:
The strength requirements shall be 4,000 pounds per square inch in 28 days. The 4,000 PSI concrete test shall be in accordance with the latest edition of ASTM Designation: C-76.

C-5 CONCRETE MIXTURE:
The aggregate requirements of the latest ASTM Designation: C361 are changed to include, "the maximum size coarse aggregate shall be of the largest size practicable for placement considering the wall thickness of the pipe but shall not exceed 1-1/2 inches. The percentage of coarse aggregate to the total aggregate shall be as high as practicable for manufacture of the pipe".

C-6 CURING REQUIREMENTS:
The curing requirements in the latest edition of ASTM Designation: C361 are changed to include this additional requirement at the end of the paragraph: "If forms are stripped immediately after the pipe is cast and moved to the curing area, the concrete pipe shall not be lifted or tipped until a minimum concrete compressive strength of 2,500 PSI is attained. Determination of the required strength shall be accomplished by tests of concrete cylinders as described in the latest edition of ASTM Designation: C361".

C-7 WALL THICKNESS:
The thickness of the pipe wall shall be not less than that shown in Table A, Paragraph C-10, Physical Test Requirements", hereof.

C-8 PIPE LENGTHS:
The maximum lengths of pipe sections shall be 8 feet.

C-10 PHYSICAL TEST REQUIREMENTS:
The hydrostatic test pressures for the pipe and rubber gasket joint required in the latest edition of ASTM Designations 361 are changed to those specified in Table A. The Contractor shall also perform external load crushing strength test on the pipe. The external load crushing strength test shall be in accordance with the minimum three-edge bearing load as specified in Table A.

TABLE A: PHYSICAL TEST REQUIREMENTS

Internal diameter (inches)	Minimum Shell Thickness (inches)	Internal Hydrostatic Pressure On Individual Section of Pipe (PSI)	Minimum 3-Edge Bearing Load (pounds per linear foot)
15	2	50	1,700
16	2	50	1,800
18	2	50	1,900
21	2 – ¼	45	2,100
24	2 – ½	40	2,200
30	2 – ¾	35	2,500
36	3	30	4.050
42	4 – ½	30	4,725
48	5	30	5,400
54	4 – ½	25	6,075
60	6	25	6,750
72	7	25	8,100

C-11 JOINTS:
Joints shall be made with round rubber gasket in conformance with the latest edition of ASTM Designation: C-361 and price quote shall be included with the pipes.

REINFORCED CONCRETE PIPE - TONGUE & GROOVE PIPE SPECIFICATIONS

REINFORCED CONCRETE PIPE - TONGUE & GROOVE PIPE SPECIFICATIONS						
CLASS III - ASTM C76 STANDARDS						
PIPE I.D.	WALL THICKNESS	CONCRETE STRENGTH	CAGE			PIPE WEIGHT
(in)	(in)	(PSI)	TYPE	INNER	OUTER	(LBS)
15	2.25	4,000	SINGLE	3"x6"-W1.75/W2.5		1,045
18	2.50					1,400
24	3.00					2,100
30	3.50			2"x8"-W5.0/W2.5		3,050
36	4.00			2"x8"-W6.0/W2.5		4,200
42	5.25		DOUBLE	3"x8"-W3.0/W2.0	3"x6"-W1.75/W2.5	6,250
48	5.75			3"x6"-W4.0/W2.5	3"x6"-W2.5/W2.5	8,100
54	6.25			3"x8"-W5.25/W2.5	3"x6"-W3.5/W2.5	9,420
60	6.75			2"x6"-W4.5/W2.5	3"x6"-W4.0/W2.5	11,500
72	7.75			2"x6"-W6.0/W2.5	3"x6"-W5.75/W3.0	15,900

REINFORCED CONCRETE PIPE - TONGUE & GROOVE PIPE SPECIFICATIONS						
CLASS IV - ASTM C76 STANDARDS						
PIPE I.D.	WALL THICKNESS	CONCRETE STRENGTH	CAGE			PIPE WEIGHT
(in)	(in)	(PSI)	TYPE	INNER	OUTER	(LBS)
15	3.00	4,000	SINGLE	3"x6"-W2.5/W2.5		1,045
18	3.25			2"x6"-W2.5/W2.5		1,400
24	3.75			2"x6"-W4.5/W2.5		2,100
30	4.25			2"x8"-W6.0/W2.5		3,050
36	4.75		DOUBLE	2"x8"-W5.0/W3.0	3"x8"-W4.5/W2.5	4,200
42	5.25			3"x6"-W5.0/W2.5	3"x6"-W3.0/W2.5	6,250
48	5.75			3"x6"-W6.5/W3.0	3"x6"-W4.0/W2.5	8,100
54	6.25			2"x8"-W5.75/W3.0	3"x6"-W5.0/W2.5	9,420
60	6.75			2"x8"-W7.0/W3.0	3"x8"-W6.25/W3.0	11,500
72	7.75	5,000		2"x8"-W10.0/W4.0	2"x8"-W6.0/W2.5	15,900

REINFORCED CONCRETE PIPE - TONGUE & GROOVE PIPE SPECIFICATIONS						
CLASS V - ASTM C76 STANDARDS						
PIPE I.D.	WALL THICKNESS	CONCRETE STRENGTH	CAGE			PIPE WEIGHT
(in)	(in)	(PSI)	TYPE	INNER	OUTER	(LBS)
15	3.00	6,000	SINGLE	3"x6"-W3.5/W2.5		1,045
18	3.25			3"x8"-W4.75/W2.5		1,400
24	3.75			3"x8"-W6.0/W2.5		2,100
30	4.25		DOUBLE	2"x8"-W7.0/W3.0	3"x8"-W6.25/W3.0	3,050
36	4.75			2"x8"-W8.25/W3.5	2"x8"-W5.0/W3.0	4,200
42	5.25			2"x8"-W6.0/W2.5	3"x8"-W5.75/W3.0	6,250
48	5.75			2"x8"-W8.0/W3.5	3"x8"-W7.0/W3.0	8,100
54	6.25			2"x8"-W10.0/W4.0	2"x8"-W6.0/W2.5	9,420
60	6.75			2"x8"-W11.5/W4.5	2"x8"-W7.0/W3.0	11,500
72	7.75			2"x6"-W8.5/W6.5	2"x8"-W10.0/W4.0	15,900

General Note:

1. All welded wire fabric steel shall meet ASTM 82 and ASTM 185 standards.
2. Aggregates shall meet ASTM C 33 standards.
3. Fly ash shall meet ASTM C 618-97 standards.
4. Type II cement shall meet ASTM C 150 standards.
5. Concrete joint sealant shall meet ASTM C 990 standards.
6. Concrete joint primer shall meet ASTM D 41 standards.
7. The maximum lengths of pipe sections shall be 8 feet.

REINFORCED POLYETHYLENE PIPE SPECIFICATIONS

SCOPE
This specification(s) describes reinforced polyethylene pipe for use in gravity flow storm drain and culvert applications in 24" through 96" nominal diameters.

DESCRIPTION
This pipe shall have a smooth waterway and exterior profile that is reinforced with high strength galvanized steel ribs. The continuous reinforcing ribs are completely encased within the polyethylene profile. Reinforced polyethylene pipe is manufactured using a helical winding process that results in continuously fusion welded circumferential lap seam. The pipe profile is manufactured using high pressure-rated thermoplastic meeting the requirements of ASTM F2562 "Standard Specification for Steel Reinforced Thermoplastic Ribbed Pipe and Fittings for Non-Pressure Drainage and Sewerage". For the purposes of hydraulic design, the recommended Manning's "n" value shall be 0.013 for pipe diameters included within this specification.

MATERIAL PROPERTIES
Virgin high density polyethylene pressure-related resins are used to manufacture reinforced polyethylene pipe and complimentary fabricated fittings. Resins shall conform to be minimum requirements of cell classification 345464 C as defined and described in the latest version of ASTM D3350 "Standard Specification for Polyethylene Plastic Pipe and Fittings Materials".

JOINT PERFORMANCE
Pipe lengths shall be joined on site using bell & spigots especially designed for reinforced polyethylene pipe. Both bell and spigot shall be reinforced with steel that is fully encased in pressure rated high density polyethylene meeting the requirements set forth in the above Material Properties paragraph and shall be watertight to an internal water pressure of 15 PSI when tested in accordance with ASTM D3212 "Standard Specification for Joints for Drain and Sewer Plastic Pipes Using Flexible Elastometric Seals".

FITTINGS
All fittings shall be fabricated from reinforced polyethylene pipe using fusion welded construction to ensure no loss of structural integrity of water-tightness at welded seams and joints.

INSTALLATION
Installation shall be in accordance with ASTM D2321 "Practice for Underground Installation of Thermoplastic Pipe for Sewers and Other Gravity-Flow Applications" along with product-specific recommendation by the manufacturer. Minimum cover shall be 1 ft. and maximum cover shall be 30 ft.

AWWA C900 PVC PLASTIC PRESSURE PIPE SPECIFICATIONS

SCOPE
This specification designates general requirements for 4" through 12" C.I.O.D.'s pipe produced in blue or white un-plasticized polyvinyl chloride (PVC) plastic pressure pipe with integral bell and spigot joints for the conveyance of water and other fluids. This pipe shall meet the requirements of AWWA Standard C900 "Polyvinyl Chloride (PVC) Water Distribution Pipe".

MATERIALS
All pipes shall be made from quality PVC resin, compounded to provide physical and mechanical properties that equal or exceed cell class 12454 as defined in ASTM D1784.

HYDROSTATIC PROOF TESTING
Each standard length of pipe is tested up to 400 psi for Pressure Class 165; 600 psi for Pressure Class 235; 800 psi for Pressure Class 305 for a minimum of 5 seconds. The integral bell shall be tested with the pipe.

STANDARD LAYING LENGTHS
Standard laying lengths are 20 feet for all sizes.

PIPE

All pipes shall be suitable for use as pressure conduit. Provisions must be made for expansion and contraction at each joint with an elastomeric gasket. The bell shall consist of an integral wall section with a factory installed, solid cross section Rieber or other elastomeric gasket, which meets the requirements of ASTM F477. The bell section shall be designed to be at least as hydrostatically strong as the pipe barrel and meet the requirements of AWWA C900. The joint design shall meet the requirements of ASTM D3139 under both pressure and 22 in. Hg vacuum. Sized and dimensions shall be as shown in this specification.

QUICK BURST TEST

Randomly selected samples testing in accordance with AWWA C900 and UL 1285 shall withstand, without failure, the pressures listed below when applied for 60-70 seconds.

DR	PRESSURE CLASS (psi)		MINIMUM BURST PRESSURE AT 73 F (psi)
	AWWA C900-97/FM 1612	AWWA C900-07	
25	100	165	535
18	150	235	755
14	200	305	985

DROP IMPACT TEST

Pipe shall withstand, without failure using Tup "B" and Flat Rate Holder "B", at 73 F, a tup impact energy of 100 ft-lbf for all Pressure Class of 4"-12" trade sizes. There shall be no visible evidence of shattering or splitting when the energy is imposed.

AWWA C905 PVC PLASTIC WATER PIPE SPECIFICATIONS

SCOPE

This specification designates general requirements for 14" through 48" un-plasticized polyvinyl chloride (PVC) plastic water pipe with integral bell and spigot joints for the conveyance of water and other fluids. This pipe shall meet AWWA C905 ANSI/NSF-61 and ANSI/UL 1285 (14" – 24").

MATERIALS

Pipe shall meet the requirements of AWWA Standard C905 "Polyvinyl Chloride (PVC) Water Transmission Pipe." All pipes shall be made from quality PVC resin, compounded to provide physical and mechanical properties that equal or exceed cell class 12454 as defined in ASTM D1784.

STANDARD LAYING LENGTHS

Standard laying lengths are 20 feet for all sizes.

PIPE

All pipes shall be suitable for use as pressure conduit. Provisions must be made for expansion and contraction at each joint with an elastomeric gasket. The bell shall consist of an integral wall section with a factory installed, solid cross section Rieber/other elastomeric gasket, which meets the requirements of ASTM F477. The bell section shall be designed to be at least as hydrostatically strong as the pipe barrel and meet the requirement of AWWA C905. The joint designs shall meet requirements of ASTM D3139, under both pressure and 22 in. Hg vacuum. Sizes and dimensions shall be as shown in this specification.

QUICK BURST TEST

Randomly selected samples tested in accordance with ANSI/UL 1285 shall withstand, without failure, the pressures listed below when applied for 60-70 seconds.

DR	PRESSURE RATING (psi)	MINIMUM BURST
18	235	755
25	165	535
32.5	125	400
41	100	315
51	80	255

FLATTENING TEST

Specimens of pipe, a minimum of 6 in. (150 mm) long, shall be flattened between parallel plates in a suitable press until the distance between the plates is 40 percent of OD of the pipe. The rate of flattening shall be uniform and such that the compression is completed within 2 to 5 minutes. There shall be no evidence of splitting, cracking or breaking.

SDR 26 AND SDR 35 GASKETED GRAVITY SANITARY SEWER PIPE

PVC gravity sewer pipe shall be made from a compound conforming to a cell classification of 12454 or 12364 as defined by ASTM D1784 and in accordance with ASTM D3034 for sizes four inch through fifteen inch. The wall thickness, when tested according to ASTM D3412, shall correspond to a dimension ratio of SDR 35 with a pipe stiffness value of 46 or SDR 26 with a pipe stiffness of 115 for heavy wall pipe. Integral bells shall incorporate locked in gaskets meeting the requirements of ASTM D3212 and F477. The pipe shall be provided in lengths of 14 feet or 20 feet as required.

ASTM D3034 GASKETED GRAVITY SEWER PIPE

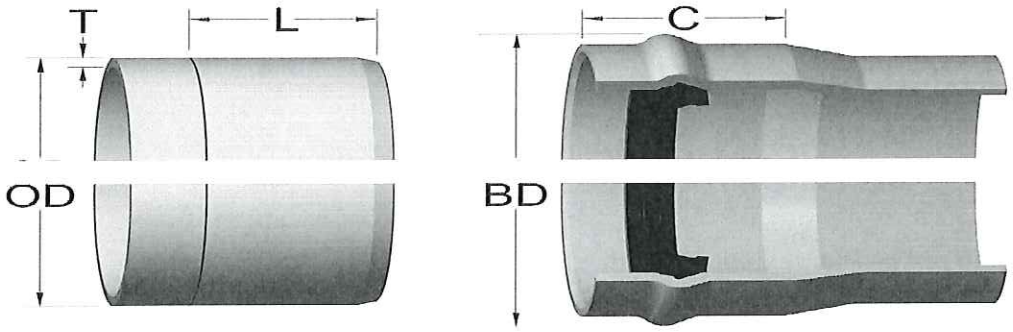

NOMINAL PIPE SIZE	OUTISDE DIA. – NOM. (OD)	*APPROX. BELL DIA. (BD)	**APPROX. BELL DEPTH (C)	INSERT MARK (L)
4"	4.215	5.25	3.75	3.13
6"	6.275	7.50	4.63	4.00
8"	8.400	10.00	5.25	4.13
10"	10.500	12.25	5.88	5.13
12"	12.500	14.25	6.50	5.38
15"	15.300	17.25	7.75	7.38

NOMINAL PIPE SIZE	SDR 35 (T)	SDR 26 (T)
4"	.120	.162
6"	.180	.241
8"	.240	.323
10"	.300	.404
12"	.360	.481
15"	.437	.588

HIGH PERFORMANCE (HP) POLYPROPYLENE STORM PIPE

1.0 SCOPE:

This specification includes materials and test methods for 12 to 60 inch diameter HP Polypropylene Pipe. The requirements of this specification are intended to provide pipe and fittings suitable for underground use in gravity-flow applications such as storm sewers, drainage and under-drains.

2.0 PIPE:

12 to 30 inch HP Polypropylene Pipe shall have a smooth interior and annular exterior corrugation and are required to meet or exceed ASTM F2736 and AASHTO M330. 36 to 60 inch pipe shall have a smooth interior and annular exterior corrugations and are required to meet or exceed ASTM F2881 and AASHTO M330. Pipe and fittings shall be homogeneous throughout and free from visible cracks, holes, foreign inclusions or other injurious defects.

3.0 FITTINGS:
Fittings shall conform to ASTM F2736, ASTM F2881 and AASHTO M330, for the respective diameters. Bell & spigot connections shall utilize a spun-on, welded or integral bell and spigot with gaskets meeting ASTM F477. Bell & spigot fittings joint shall meet the watertight joint performance requirements of ASTM D3212. Corrugated couplings shall be split collar, engaging at least 2 full corrugations.

4.0 JOINTS:
HP Polypropylene Pipe shall be joined with a gasketed integral bell & spigot joint meeting the requirements of ASTM F2736 or F2881, for the respective diameters.

HP Polypropylene Pipe shall be watertight according to the requirements of ASTM D3212. Spigots shall have gaskets meeting the requirements of ASTM F477. Gasket shall be installed by the pipe manufacturer and covered with a removable, protective wrap to ensure the gasket is free from debris. A joint lubricant available from the manufacturer shall be used on the gasket and bell during assembly.

HP Polypropylene Pipe shall have a reinforced bell with a polymer composite band installed by the manufacturer.

5.0 MATERIAL PROPERTIES:
Polypropylene compound for pipe and fitting production shall be impact modified copolymer meeting the material requirements of ASTM F2736, Section 4, ASTM F2881, Section 5 and AASHTO M330, Section 6.1, for the respective diameters.

6.0 INSTALLATION:
Installation shall be in accordance with ASTM D2321, manufacturers recommended installation guidelines and plan specifications.

7.0 PIPE DIMENSIONS:

Nominal Pipe I.D. in (mm)	12 (300)	15 (375)	18 (450)	24 (600)	30 (750)	36 (900)	42 (1050)	48 (1200)	60 (1500)
Average Pipe I.D. In (mm)	12.1 (307)	14.9 (378)	18.0 (457)	24.1 (612)	30.1 (765)	35.7 (907)	41.8 (1062)	47.3 (1201)	59.3 (1506)
Average Pipe O.D. in (mm)	14.5 (368)	17.6 (447)	21.2 (538)	28.0 (711)	35.4 (899)	41.1 (1044)	47.2 (1199)	53.8 (1367)	66.5 (1689)
Minimum Pipe Stiffness * @ 5% Deflection* #/in./in. (kN/m^2)	75 (520)	60 (411)	56 (385)	50 (343)	46 (320)	40 (275)	35 (240)	35 (240)	30 (205)

HIGH DENSITY POLYETHYLENE PIPE (HDPE)

SCOPE:
This specification describes 4- through 60 inch (100 to 1500 mm) HDPE pipe (per ASTM F2648) for use in gravity-flow land drainage applications.

PIPE Requirements:
HDPE pipe (per ASTM F2648) shall have smooth interior and annular exterior corrugations.

- 4-through 60 inch (100 to 1500 mm) shall meet ASTM F2648
- Manning's "n" value for use in design shall be 0.012

Joint Performance:
Pipe shall be joined using a bell & spigot joint meeting ASTM F2648. The joint shall be soil-tight and gaskets, when applicable, shall meet the requirements of ASTM F477. Gaskets shall be installed by the pipe manufacturer and covered with a removable wrap to ensure the gasket is free from debris. A joint lubricant supplied by the manufacturer shall be used on the gasket and bell during assembly.

Fittings:
Fittings shall conform to ASTM F 2306. Bell and spigot connections shall utilize a spun-on or welded bell and valley or saddle gasket meeting the soil-tight joint performance requirements of ASTM F 2306.

Material Properties
Material for pipe production shall be an engineered compound of virgin and recycled high density polyethylene conforming with the minimum requirements of cell classification 424420C (ESCR Test Condition B) for 4-through 10 inch (100 to 250 mm) diameters, and 435420C (ESCR Test Condition B) for 12 through 60 inch (300 to 1500 mm) diameters, as defined and described in the latest version of ASTM D3350, except that carbon black content should not exceed 4%. The design engineer shall verify compatibility with overall system including structural, hydraulic, material and installation requirements for a given application.

Installation
Installation shall be in accordance with ASTM D2321 and manufacturers published installation guidelines, with the exception that minimum cover in trafficked areas for 4-through 48 inch (100 to 1200 mm) diameters shall be one foot. (0.3 m) and for 60 inch (1500 mm) diameters, the minimum cover shall be 2 ft. (0.6 mm) in single run applications. Backfill for minimum fill heights depend on embedment material and compaction level; please refer to manufactures guide lines.

Pipe I.D In mm	4 (100)	6 (150)	8 (200)	10 (250)	12 (300)	15 (375)	18 (450)	24 (600)	30 (750)	36 (900)	42 (1050)	48 (1200)	60 (1500)
Pipe O.D. * In mm	4.8 (122)	6.9 (175)	9.1 (231)	11.4 (290)	14.5 (368)	18 (457)	22 (559)	28 (711)	36 (914)	42 (1067)	48 (1219)	54 (1372)	67 (1702)
Perforations	All diameters availability with or without perforation												

*Pipe O.D. values ar provided for reference purposes only. Values stated for 12 through 60 inch are +/- 1 inch.

TERMS & CONDITIONS:

1. The contract term will be for a period of one (1) year period with Hidalgo County's option to extend the contract for an additional one (1) year under the same rates, terms and conditions.

2. Hidalgo County reserves the right to continue this bid for an additional sixty (60) day grace period at the end of the contract term for unforeseen delay in award of new bid for next contract.

3. Hidalgo County reserves the right to hold the bids received for a period of ninety (90) days without taking action hereon.

4. Hidalgo County may award the bid on a lump sum basis to one (1) bidder or to multiple bidders on an item by item basis in each category, whichever is in the best interest of the County. For evaluation and consideration of items bid, samples will be submitted upon request. Categories will be as follows.

5. Hidalgo County reserves the right to reject any/all bids, to waive any/all formalities or Technicalities, or to accept the bid considered the best and most advantageous to the County.

6. After bid is awarded and low bidder(s) default(s) in meeting the general instructions to bidders and/or comply with contractual agreement, Hidalgo County reserves the right to seek services from the next low bidder(s). In such event, County shall charge the successful bidder(s) the difference for any additional cost of such item(s).

7. Any contract awarded to a successful bidder will be in effect until:
   (a) The contract expires,
   (b) Delivery and acceptance of products and/or performance of service ordered,
   (c) Terminated by County with thirty (30) days written notice prior to cancellation.

8. It is understood and agreed that in case Hidalgo County should need "any items listed" and it is not available within the time frame needed from the successful Bidder during the term of this contract, Hidalgo County reserves the right to purchase these items from other sources other than the successful Bidder and shall not be in violation of any terms or conditions of said contract.

9. After Bid is awarded and successful awarded contractor(s) default(s) in meeting the general instructions to bidder(s) and/or compiling with Bid agreement, Hidalgo County reserves the right to seek services from the next low bidder. In such event, County shall charge the successful bidder the difference for any additional cost to such item.

10. Hidalgo County reserves the right to seek purchases from State awarded vendors or any other Cooperative Purchasing programs, whenever it is in the best interest of the County to do so.

11. Insurance requirements for this project to be maintained throughout the contract term (Refer to limits on the Exhibit "C" for limits); insurance certificate must be submitted to the Purchasing Department prior to any services being performed by the awarded bidder.

12. The bidder(s) awarded the contract **cannot** engage the services of a **subcontractor without prior written consent of Hidalgo County** to perform services hereunder. The successful bidder(s) must present evidence that the proposed subcontractor possess all the necessary licenses and permits to perform the services and that subcontractor has obtained the required insurance.

13. Bidder(s) agree that to the extent an item(s) in unavailable for Bidder's own inventory, Bidder(s) will be responsible for locating an alternative supplier and for providing the product or service to Hidalgo County.

14. Unit prices quoted shall remain firm for the period of the contract and shall include the cost of shipping and delivery of all items to the designated FOB point and must include any and all cost in the delivered unit price.

All costs and expenses associated with the preparation and submission of proposals shall be the responsibility of the submitter and no reimbursements for such charges or expenses shall be passed onto the County.

Market Volatility and Unit Price Adjustments:
Hidalgo County recognizes that during periods of national crisis and unstable economic conditions, unforeseen price increases might affect costs for goods and services contracted on an annual basis. The following procedure may be employed to mediate price volatility:

- **Requesting Price Adjustment**: Upon written request of the Vendor to the County Purchasing Agent, the County may review evidence of prevailing industry-wide market conditions that warrant an adjustment in bid prices contained in the contract.
- A Vendor must tie any price change clause to an industry-wide or otherwise nationally recognized index, or some other form of verifiable document. Such written request must be accompanied by a certified copy of the supplier's advisory or notification to the vendor of the price changes.
- The Vendor must put the Purchasing Agent on the mailing lists for such publications so that the Purchasing Agent can monitor said changes. Such membership shall be at no cost to the County.
- The County Purchasing Agent retains the right to determine whether or not such proposed price changes are in the best interest of the County.
- No price escalation will be authorized in excess of the amount of the increase referred to in the supplier's notice.
- The County may only grant a price increase if the evidence presented is deemed reliable. Should the County allow a price increase, the approved price change shall be honored for all orders received by the vendor or contractor after the effective date of such price change. Approved price changes are not applicable to orders already issued and in process at time of price change.
- **Price Reduction**: Vendor shall notify the County at the time when the Vendor's costs for items and/or supplies reduce due to stabilization in the market at which time prices for items on this contract shall be reduced accordingly. Failure by the Vendor to notify the County of a decrease in costs for items and/or supplies for which the Vendor was granted a price adjustment, may result in immediate termination of this contract and the County shall not be obligated to pay the Vendor the difference between the contract price and the price adjustment.

- **Time Frame for Adjusted Price Increases:** Price increases are only valid for the quarter in which they are requested and approved. Prices shall return to the original contract price at the beginning of the following quarter unless a Vendor notifies the County in writing within ten (10) days of expiration of the quarter in which the price increase is in effect, that it desires to have the price increase continue or that the Vendor is requesting a different price increase for the following quarter. Such request must be supplemented with sufficient justification to demonstrate that the price increase remains necessary. The County Purchasing Department shall have sole discretion whether to grant the price increase extension. The County too, shall have discretion to unilaterally reduce, eliminate or extend a price adjustment to the Vendor at any time upon written notice from the County to the Vendor demonstrating justification for such reduction, elimination or extension of the price adjustment.

- **Allowable Review Periods**: Price adjustment reviews may only be requested by the Vendor on a quarterly basis. However, the County may at its own discretion, conduct temporary price adjustment reviews at any time. The County Purchasing Agent and/or the County Auditor reserve the right to audit and/or examine any pertinent books, documents, papers, records or invoices relating directly to the contract transaction in question after reasonable notice and during normal business hours.

- **Dollar Limit to Price Changes**: The total increase in contract price shall not exceed twenty-five percent (25%) of the original contract price during the contract term.

ADDITIONAL INFORMATION

Hidalgo County is requesting that any and all questions, inquiries, and clarifications regarding quotes, bids, proposals, or statements of qualifications be addressed to, Martha L. Salazar, CPPB, Purchasing Agent, 2812 S. Business Hwy. 281, Edinburg, Texas 78539. **TELEPHONE INQUIRIES WILL NOT BE ACCEPTED.**

All written inquiries will be accepted via facsimile (956) 292-7612 or via e-mail to matilde.faz@co.hidalgo.tx.us by no later than, Monday, March 27, 2017 by 5:00 p.m. Responses to said inquiries will be sent to all applicants via-email by no later than Wednesday, March 29, 2017 by 5:00 p.m.

EXHIBIT "B"

BID PAGE

REQUEST FOR BIDS

Hidalgo County

(All funding sources, programs & entities)

"Pipes & Related Miscellaneous Items"

RFB No.: 2017-046-04-05-FAZ

CATEGORY (A) – PIPES

CORRUGATED POLYVINYL CHLORIDE (PVC) STORM SEWER PIPE **NIGP CODE: 665-89** Polyvinyl Chloride (PVC)		
DESCRIPTION	PRICE	
12"		LF
15"		LF
18"		LF
24"		LF
30"		LF
36"		LF
42"		LF
48"		LF

CORRUGATED STEEL STORM SEWER PIPE **NIGP CODE: 210-29** Corrugated Galvanized Metal Pipe **(UNIT PRICE INCLUDES ONE GASKETED BAND CONNECTION FOR EVERY 20 FOOT JOINT)**				
DIAMETER	TYPE "IR"PIPE PRICE	TYPE "I" PIPE PRICE	TYPE "IA" PIPE PRICE	
12"				LF
15"				LF
18"				LF
24"				LF
30"				LF
36"				LF
42"				LF
48"				LF
54"				LF
60"				LF
66"				LF
72"				LF
78"				LF
84"				LF
90"				LF
96"				LF
102"				LF
108"				LF
114"				LF
120"				LF
126"				LF
132"				LF
138"				LF
144"				LF

REINFORCED CONCRETE PIPE – RUBBER GASKET JOINT PIPE NIGP CODE: 658-68						
DESCRIPTION	CLASS III PRICE		CLASS IV PRICE		CLASS V PRICE	
12"		LF		LF		LF
15"		LF		LF		LF
18"		LF		LF		LF
24"		LF		LF		LF
30"		LF		LF		LF
36"		LF		LF		LF
42"		LF		LF		LF
48"		LF		LF		LF
54"		LF		LF		LF
60"		LF		LF		LF
72"		LF		LF		LF

REINFORCED CONCRETE PIPE – TONGUE & GROOVE PIPE NIGP CODE: 658-68						
DESCRIPTION	CLASS III PRICE		CLASS IV PRICE		CLASS V PRICE	
12"		LF		LF		LF
15"		LF		LF		LF
18"		LF		LF		LF
24"		LF		LF		LF
30"		LF		LF		LF
36"		LF		LF		LF
42"		LF		LF		LF
48"		LF		LF		LF
54"		LF		LF		LF
60"		LF		LF		LF
72"		LF		LF		LF

REINFORCED POLYTHYLENE PIPE – 20 FOOT JOINTS NIGP CODE: 658-58		
DESCRIPTION	PRICE	
24"		LF
30"		LF
36"		LF
42"		LF
48"		LF
54"		LF
60"		LF
72"		LF
84"		LF
96"		LF

AWWA C900 PVC PLASTIC PRESSURE PIPE NIGP CODE: 658-56 PLASTIC PIPES OR NIGP CODE: 658-60 PVC PIPES						
DESCRIPTION	DR 14 PRICE		DR 18 PRICE		DR 25 PRICE	
4"		LF		LF		LF
6"		LF		LF		LF
8"		LF		LF		LF
10"		LF		LF		LF
12"		LF		LF		LF

AWWA C905 PVC PLASTIC WATER PIPE NIGP CODE: 658-56 PLASTIC PIPES OR NIGP CODE: 658-60 PVC PIPES									
DESCRIPTION	DR 18 PRICE		DR 25 PRICE		DR 32.5 PRICE		DR 41 PRICE		DR 51 PRICE	
14"		LF		LF		LF		LF		LF
16"		LF		LF		LF		LF		LF
18"		LF		LF		LF		LF		LF
24"		LF		LF		LF		LF		LF
30"		LF		LF		LF		LF		LF
36"		LF		LF		LF		LF		LF
42"		LF		LF		LF		LF		LF
48"		LF		LF		LF		LF		LF

SDR 26 AND SDR 35 GASKETED GRAVITY SANITARY SEWER PIPE NIGP CODE: 210-35 SEWER PIPE JOINT SEALING COMPOUND				
SIZE OF PIPE	SDR 26		SDR 35	
4"		LF		LF
6"		LF		LF
8"		LF		LF
10"		LF		LF
12"		LF		LF
15"		LF		LF

HIGH PERFORMANCE (HP) POLYPROPYLENE STORM PIPE		
DESCRIPTION	PRICE	
12"		LF
15"		LF
18"		LF
24"		LF
30"		LF
36"		LF
42"		LF
48"		LF
60"		LF

HIGH DESTINY POLYETHYLENE PIPE (HDPE) NIGP CODE: 658-58 Polyethylene Pipe And Fitting		
DESCRIPTION	PRICE	
4"		LF
6"		LF
8"		LF
10"		LF
12"		LF
15"		LF
18"		LF
24"		LF
30"		LF
36"		LF
42"		LF
48"		LF
54"		LF
60"		LF

PLUMBING PIPES – 20 FOOT SECTIONS NIGP CODE: 967-60	
PVC	PRICE
½"	
1 ½"	
2"	
3"	
4"	

PLUMBING PIPES – 20 FOOT SECTIONS NIGP CODE: 967-60	
COPPER	PRICE
½"	
¾"	

CATEGORY (B) – INLETS

NIGP CODE: 210-31

INLETS, AREA, SEWER DRAIN, PRECAST, CONCRETE, STORM DRAIN, **NO BOTTOM FLOORS**

DESCRIPTION	PRICE																
	2'	2 ½'	3'	3 ½'	4'	4 ½'	5'	5 ½'	6'	6 ½'	7'	7 ½'	8'	8 ½'	9'	9 ½'	10'
Type "A" Inlet (5' x 3')																	
Type "A-1" Inlet (5' x 4')																	
Type "A-2" Inlet (5' x 5')																	
Type "A-3" Inlet (5' x 6')																	
Type "A" (SPL-1) Inlet (5' x 3')																	
Type "A-1" (SPL-1) Inlet (5' x 4')																	
Type "A-2" (SPL-1) Inlet (5' x 5')																	
Type "A-3" (SPL-1) Inlet (5' x 6')																	
TYPE "C" INLET 2' X 2'																	
TYPE "C" INLET 3' X 3'																	
TYPE "C" INLET 4' X 4'																	
TYPE "CC" INLET 5' x 3'																	

Type "F" Inlet (W=3')																
Type "F-1" Inlet (W=4')																
Type "F-2" Inlet (W=5')																
Type "F-3" Inlet (W=6')																
Type "F" (SPL-1) Inlet (W=3')																
Type "F-1" (SPL-1) Inlet (W=4')																
Type "F-2" (SPL-1) Inlet (W=5')																
Type "F-3" (SPL-1) Inlet (W=6')																

CATEGORY (C) – MANHOLES, NO BOTTOM FLOORS

NIGP CODE: 890-30

MANHOLES

DESCRIPTION	PRICE														
	3'	3 ½'	4'	4 ½'	5'	5 ½'	6'	6 ½'	7'	7 ½'	8'	8 ½'	9'	9 ½'	10'
TYPE "A" MANHOLE															
TYPE "A-1" MANHOLE															
TYPE "M" MANHOLE															

CATEGORY (D) – MISCELLANEOUS

DESCRIPTION		
WATER VALVE	UNIT	PRICE
2"	EA	
4"	EA	
6"	EA	
8"	EA	
10"	EA	
90 DEGREE ELBOW		
2"	EA	
4"	EA	
6"	EA	
8"	EA	
10"	EA	
45 DEGREE ELBOW		
2"	EA	
4"	EA	
6"	EA	
8"	EA	
10"	EA	
STEEL PIPE CASING WITH SPACERS		
4"	LF	
6"	LF	
12"	LF	
16"	LF	
24"	LF	
FIRE HYDRANT W/VALVE	EA	
PVC SCHEDULE 40 WATER LINE DR 18		
2"	LF	
8"	LF	
PVC SCHEDULE 40		
1.5"	LF	
0.75"	LF	
0.5"	LF	
WATER SADDLE W/2' CORPORATE VALVE		
8" x 2"	EA	

HP Dual Wall Marmac Couplers		
PIPE SIZE	**PRICE**	**UNIT**
12"		EA
15"		EA
18"		EA
24"		EA
30"		EA
36"		EA
42"		EA
48"		EA
60"		EA

HP Dual Wall Fabricated Tees		
PIPE SIZE	**PRICE**	**UNIT**
12"		EA
15"		EA
18"		EA
24"		EA
30"		EA
36"		EA
42"		EA
48"		EA
60"		EA

HP Dual Wall Fabricated Bends						
PIPE SIZE	**11.25 Bend**	**22.5 Bend**	**30* Bend**	**45* Bend**	**90* Bend**	**Unit**
12"						EA
15"						EA
18"						EA
24"						EA
30"						EA
36"						EA
42"						EA
48"						EA
60"						EA

EXHIBIT "B" – BID PAGE
Hidalgo County (All funding sources, programs & entities)
"PIPES & Related Miscellaneous Items"
RFB No.: 2017-046-04-05-FAZ

BIDDER/COMPANY NAME:_____

ADDRESS: _____

CITY: _____ **STATE:** _____ **ZIPCODE:**_____

PHONE No:_____ **FAX No:** _____ **CELL №**_____

AUTHORIZED SIGNATURE:_____

PRINTED NAME: _____

TITLE: _____ **DATE:**_____

EMAIL:_____

EXHIBIT "C"

INSURANCE REQUIREMENTS

REQUEST FOR BIDS

Hidalgo County

(All funding sources, programs & entities)

"Pipes & Related Miscellaneous Items"

RFB No.: 2017-046-04-05-FAZ

EXHIBIT "C"

Insurance Requirements
Applicable to the Acquisition of Goods and /or Services
(other than Professional Services)

The Bidder awarded the contract shall furnish proof of insurance, which will also include any subcontractor that is subcontracted by the bidder in at least the following limits, to be in place prior to providing any services under this Contract and to continue at all times in force in effect during the term of this Contract:

1. A Five Hundred Thousand Dollar ($500,000.00) Comprehensive General Liability insurance policy providing additional coverage to all underlying liabilities of County.

2. Automobile liability insurance policy with limits of at least Three Hundred Thousand Dollars ($300,000.00) per person and Five Hundred Thousand Dollars ($500,000.00) per occurrence. Coverage should include injury to or death of persons and property damage claims with limits up to Five Hundred Thousand ($500,000.00) arising out of the services provided to County hereunder.

3. Uninsured/Underinsured motorist coverage in an amount equal to the bodily injury limits set forth immediately above;

4. Workers compensation insurance in amounts established by Texas law, unless the Bidder is specifically exempted from the Texas Workers Compensation Act, Texas Labor Code Chapter 401, et. seq.

Hidalgo County will only accept certificates of insurance on an Acord form (as attached hereto). Certificates of insurance naming County as an **additional insured** shall be submitted to County for approval prior to any services being performed by Contractor. Each policy of insurance required hereunder shall extend for a period equivalent to, or longer than the term of the Contract, and any insurer hereunder shall be required to give at least thirty (30) days written notice to the County prior to the cancellation of any such coverage on the termination date, or otherwise. This Contract shall be automatically suspended upon the cancellation, or other termination, of any required policy of insurance hereunder, and such suspension shall continue until evidence adequate replacement coverage is provided to County. If replacement coverage is not provided within thirty (30) days following suspension of the Contract, this Contract shall automatically terminate.

ACORD CERTIFICATE OF INSURANCE

DATE (MM/DD/YY)

PRODUCER	THIS CERTIFICATE IS ISSUED AS A MATTER OF INFORMATION ONLY AND CONFERS NO RIGHTS UPON THE CERTIFICATE HOLDER. THIS CERTIFICATE DOES NOT AMEND, EXTEND OR ALTER THE COVERAGE AFFORDED BY THE POLICIES BELOW.
	INSURERS AFFORDING COVERAGE
INSURED	INSURER A:
	INSURER B:
	INSURER C:
	INSURER D:
	INSURER E:

COVERAGES

THE POLICIES OF INSURANCE LISTED BELOW HAVE BEEN ISSUED TO THE INSURED NAMED ABOVE FOR THE POLICY PERIOD INDICATED. NOTWITHSTANDING ANY REQUIREMENT, TERM OR CONDITION OF ANY CONTRACT OR OTHER DOCUMENT WITH RESPECT TO WHICH THIS CERTIFICATE MAY BE ISSUED OR MAY PERTAIN, THE INSURANCE AFFORDED BY THE POLICIES DESCRIBED HEREIN IS SUBJECT TO ALL THER TERMS, EXCLUSIONS AND CONDITIONS OF SUCH POLICIES. AGGREGATE LIMITS SHOWN MAY HAVE BEEN REDUCED BY PAID CLAIMS.

INSR LTR	TYPE OF INSURANCE	POLICY NUMBER	POLICY EFFECTIVE DATE (MM/DD/YY)	POLICY EXPIRATION DATE (MM/DD/YY)	LIMITS	
A	**GENERAL LIABILITY** ☐ COMMERCIAL GENERAL LIABILITY ☐☐ CLAIMS MADE OCCUR ☐ OWNER'S & CONT. PROT ☐ OWNER'S PROTECTIVE LIABILITY GEN'L AGGREGATE LIMIT APPLIES PER: ☐ POLICY PROJECT ☐ LOC				EACH OCCURRENCE FIRE DAMAGE (Any one fire) MED (Any one person) PERS & ADV INJURY AL AGGREGATE ODUCTS – COMP/OP GG	$ $ $ $ $ $
B	**AUTOMOBILE LIABILITY** ☐ ANY AUTO ☐ ALL OWNED AUTOS ☐ SCHEDULED AUTOS ☐ HIRED AUTOS ☐ NON-OWNED AUTOS				COMBINED SINGLE LIMIT (Ea accident) BODILY INJURY (Per person) BODILY INJURY (Per accident) PROPERTY DAMAGE (Per accident)	$ $ $ $
	GARAGE LIABILITY ☐ ANY AUTO				AUTO ONLY-EA ACCIDENT OTHER THAN AUTO ONLY EA ACC AGG	$ $ $
C	**EXCESS LIABILITY** ☐ OCCUR ☐ CLAIM DE ☐ DEDUCTIBLE ☐ RETENTION $				EACH OCCURENCE AGGREGATE	$ $ $ $ $
D	**WORKERS COMPENSATION AND EMPLOYER'S LIABILIT**				WC STATU- ☐ OTHER TORY LIMITS E.L. EACH ACCIDENT E.L. DISEASE-EA EMPLOYEE E.L. DISEASE-POLICY LIMIT	$ $ $
	OTHER					

DESCRIPTION OF OPERATIONS / LOCATION / VEHICLES / EXCLUSIONS ADDED BY ENDORSEMENT / SPECIAL PROVISIONS

County of Hidalgo shall be named as additional insured on all Commercial General Liability policies.

CERTIFICATE HOLDER	ADDITIONAL INSURED; INSURER LETTER: _____ CANCELLATION
Hidalgo County **Attn: Purchasing Department** **2812 S Highway Bus. 281** **Edinburg, Texas 78539**	SHOULD ANY OF THE ABOVE DESCRIBED POLICIES BY CANCELLED BEFORE THE EXPIRATION DATE THEREOF, THE ISSUING INSURER WILL ENDEAVOR TO MAIL ***30*** DAYS WRITTEN NOTICE TO THE CERTIFICATE HOLDER NAMED TO THE LEFT, BUT FAILURE TO DO SO SHALL IMPOSE NO OBLIGATION OR LIABILITY OF ANY KIND UPON THE INSURER, ITS AGENTS OR REPRESENTATIVES. AUTHORIZED REPRESENTATIVE

SAMPLE

Insurance Requirement Acknowledgment

I, _____, authorized representative for _____,
Company/Vendor

hereby acknowledge receipt of the County's required insurance limits. Said requirements:

- will be acquired within 10 working days after notification from Purchasing Department of bid awarded by the Hidalgo County Commissioners' Court;
- will acquire additional amounts required to meet the County's requirements within 10 working days after notification from Purchasing Department of bid award by the Hidalgo County Commissioners' Court; currently carry the following:

  Automobile Liability: $_____ General Liability: $_____
- have already been met, see attached copy of insurance certificate.

_____ _____.
Authorized Representative Date

Notice to Bidder:
A certificate of insurance for the required insurance limits shall be provided to the Purchasing Department's Contract Managers in order to qualify for award of bid and to execute a contract between your Company and the County

Failure to provide Certificates of Insurance to the Purchasing Department's Contract Managers will cause the bid award to be rescinded and re-awarded to next lowest bidder. Certificates of Insurance will be monitored and verified on a **quarterly basis** to ensure coverage policy is in place. It is the Company's obligation to maintain the appropriate insurance coverage throughout the term of the contract.

THIS FORM MUST ACCOMPANY BID PACKET

PROJECT REQUIREMENTS ACKNOWLEDGMENT

This is to certify that I, _____, possess all of the APPLICABLE:

1. Licenses: _____.
2. Bond (if applicable)_____
3. Certificates: _____.
4. Permits: _____.
5. Other: _____.

necessary to carry out the required project. Furthermore, I am providing copies of the required documentation so that, if my company is awarded this bid, I may be eligible to enter into a contract with Hidalgo County and proceed to complete the project in a timely manner.

* Any licenses, bonds (if applicable),certificates, permits, etc. which are required must be presented as part of the bid packet in order to expedite the bid evaluation process.

_____ _____.
Authorized Signature Date

_____.
Company

_____.
Address

_____.
City, State, Zip

THIS FORM MUST ACCOMPANY BID PACKET

EXHIBIT "D"

CIQ FORM
CONFLICT OF INTEREST QUESTIONNAIRE

REQUEST FOR BIDS

Hidalgo County

(All funding sources, programs & entities)

"Pipes & Related Miscellaneous Items"

RFB No.: 2017-046-04-05-FAZ

CONFLICT OF INTEREST QUESTIONNAIRE

FORM CIQ

For vendor doing business with local governmental entity

This questionnaire reflects changes made to the law by H.B. 23, 84th Leg., Regular Session.

This questionnaire is being filed in accordance with Chapter 176, Local Government Code, by a vendor who has a business relationship as defined by Section 176.001(1-a) with a local governmental entity and the vendor meets requirements under Section 176.006(a).

By law this questionnaire must be filed with the records administrator of the local governmental entity not later than the 7th business day after the date the vendor becomes aware of facts that require the statement to be filed. *See* Section 176.006(a-1), Local Government Code.

A vendor commits an offense if the vendor knowingly violates Section 176.006, Local Government Code. An offense under this section is a misdemeanor.

OFFICE USE ONLY

Date Received

1 **Name of vendor who has a business relationship with local governmental entity.**

2 ☐ **Check this box if you are filing an update to a previously filed questionnaire.** (The law requires that you file an updated completed questionnaire with the appropriate filing authority not later than the 7th business day after the date on which you became aware that the originally filed questionnaire was incomplete or inaccurate.)

3 **Name of local government officer about whom the information is being disclosed.**

_____

Name of Officer

4 **Describe each employment or other business relationship with the local government officer, or a family member of the officer, as described by Section 176.003(a)(2)(A). Also describe any family relationship with the local government officer. Complete subparts A and B for each employment or business relationship described. Attach additional pages to this Form CIQ as necessary.**

A. Is the local government officer or a family member of the officer receiving or likely to receive taxable income, other than investment income, from the vendor?

☐ Yes ☐ No

B. Is the vendor receiving or likely to receive taxable income, other than investment income, from or at the direction of the local government officer or a family member of the officer AND the taxable income is not received from the local governmental entity?

☐ Yes ☐ No

5 **Describe each employment or business relationship that the vendor named in Section 1 maintains with a corporation or other business entity with respect to which the local government officer serves as an officer or director, or holds an ownership interest of one percent or more.**

6 ☐ Check this box if the vendor has given the local government officer or a family member of the officer one or more gifts as described in Section 176.003(a)(2)(B), excluding gifts described in Section 176.003(a-1).

7

_____ _____

Signature of vendor doing business with the governmental entity Date

CONFLICT OF INTEREST QUESTIONNAIRE
For vendor doing business with local governmental entity

A complete copy of Chapter 176 of the Local Government Code may be found at http://www.statutes.legis.state.tx.us/Docs/LG/htm/LG.176.htm. For easy reference, below are some of the sections cited on this form.

Local Government Code § 176.001(1-a): "Business relationship" means a connection between two or more parties based on commercial activity of one of the parties. The term does not include a connection based on:

(A) a transaction that is subject to rate or fee regulation by a federal, state, or local governmental entity or an agency of a federal, state, or local governmental entity;

(B) a transaction conducted at a price and subject to terms available to the public; or

(C) a purchase or lease of goods or services from a person that is chartered by a state or federal agency and that is subject to regular examination by, and reporting to, that agency.

Local Government Code § 176.003(a)(2)(A) and (B):

(a) A local government officer shall file a conflicts disclosure statement with respect to a vendor if:

***

(2) the vendor:

(A) has an employment or other business relationship with the local government officer or a family member of the officer that results in the officer or family member receiving taxable income, other than investment income, that exceeds $2,500 during the 12-month period preceding the date that the officer becomes aware that

(i) a contract between the local governmental entity and vendor has been executed; or

(ii) the local governmental entity is considering entering into a contract with the vendor;

(B) has given to the local government officer or a family member of the officer one or more gifts that have an aggregate value of more than $100 in the 12-month period preceding the date the officer becomes aware that:

(i) a contract between the local governmental entity and vendor has been executed; or

(ii) the local governmental entity is considering entering into a contract with the vendor.

Local Government Code § 176.006(a) and (a-1)

(a) A vendor shall file a completed conflict of interest questionnaire if the vendor has a business relationship with a local governmental entity and:

(1) has an employment or other business relationship with a local government officer of that local governmental entity, or a family member of the officer, described by Section 176.003(a)(2)(A);

(2) has given a local government officer of that local governmental entity, or a family member of the officer, one or more gifts with the aggregate value specified by Section 176.003(a)(2)(B), excluding any gift described by Section 176.003(a-1); or

(3) has a family relationship with a local government officer of that local governmental entity.

(a-1) The completed conflict of interest questionnaire must be filed with the appropriate records administrator not later than the seventh business day after the later of:

(1) the date that the vendor:

(A) begins discussions or negotiations to enter into a contract with the local governmental entity; or

(B) submits to the local governmental entity an application, response to a request for proposals or bids, correspondence, or another writing related to a potential contract with the local governmental entity; or

(2) the date the vendor becomes aware:

(A) of an employment or other business relationship with a local government officer, or a family member of the officer, described by Subsection (a);

(B) that the vendor has given one or more gifts described by Subsection (a); or

(C) of a family relationship with a local government officer.

VENDOR'S APPLICATION & W-9 FORM

REQUEST FOR BIDS

Hidalgo County

(All funding sources, programs & entities)

"Pipes & Related Miscellaneous Items"

RFB No.: 2017-046-04-05-FAZ

HIDALGO COUNTY
PURCHASING DEPARTMENT
Bidder/Vendor Application

Complete in print or type. Please return this application to the Hidalgo County Purchasing Department thru Facsimile: (956) 318-2629 or (956) 292-7612 in person or regular mail to: 2812 S. Business Hwy. 281 , Edinburg, Texas 78539 or email: purchasing@co.hidalgo.tx.us

Company Name: **Telephone No. ( )**
dba Name:
Legal Name:
Mailing Address : **Fax No. ( )**
Physical Address:
City, State, Zip **Tax I.D. No.**
Remit to Address : **City, State, Zip**
E-Mail Address:
Representative(s) Name(s) & Title(s)
Type of Organization (check one): _____ Individual _____ Partnership _____ Corporation _____Non-Profit _____ LLC _____ Sole Proprietor _____ Other, Specify **State Identification No._____ (Please attached completed W-9 form with this application)** **Federal Identification No. or (if individual) SS No.**
State of Incorporation: _____ Date:_____ Other:
Type of Business (check one): _____ Manufacturer _____ Wholesaler _____ Retailer _____ Broker _____ Distributor _____ Service Organization _____ Other, Specify
Name & Title of Person(s) Authorized to Sign Bids, Proposals, and/or Contracts:
Small and/or Disadvantaged Business Information (check application criteria) **Small Business:_____Disadvantaged Business (At Least 51% Ownership)** ☐ Less than 125,000 annual gross receipt ☐ Black American ☐ Native American ☐ Less than 250,000 annual gross receipt ☐ Hispanic American ☐ Women ☐ Less than 499,000 annual gross receipt ☐ Asian Pacific American ☐ Other ☐ More than 500,000 annual gross receipt **Have you been certified as a HUB or an MBE/WBE source?:** ☐ Yes ☐ No **Indicate Certification No.(s):_____ or are Certificate(s) attached?:** ☐ Yes ☐ No
What type of product(s) is/are solicited by your company?: **Would you like to be provided with specifications for procurements of such products?:** ☐ Yes ☐ No
To Be Completed by the County: Rec'd by (Purchasing):_____ Date Rec'd by (Purchasing): **Date Forwarded Information to Auditor's Office:_____Entry Date: _____ Vendor No.:**

Revised12/14/06

HISTORICALLY UNDERUTILIZED BUSINESS (HUB) DECLARATION

The primary objective of the Hidalgo County HUB Program is to ensure Historically Underutilized Businesses receive a fair and equal opportunity for participation in the County's procurement process. This fact holds true for Services (Professional & Non-Professional), Commodities, and Construction contracts and any subcontracts thereto. The program strongly encourages Prime Contractors to provide subcontracting opportunities to Certified Hub Contractors/Vendors. Our goal for HUB contractor/vendor participation, as well as HUB subcontractor participation is 30%. To be considered as a "Certified HUB Contractor/Vendor" the contractor/vendor must have been certified by, and hold a current and valid certification with any of the three agencies listed below.

Have you been Certified as a HUB or an MBE/WBE source?: ☐Yes ☐ No

If yes, by whom?: ☐ Texas Building & Procurement Commission ☐ Other_____

Indicate Certification No(s).:_____ or Are Certificate(s) Attached?: ☐ Yes ☐ No

---

LIST OF CERTIFIED HUB SUBCONTRACTORS

(Attach additional pages if necessary)

What percentage of the Bid, RFP,or RFQ is to be subcontracted with Certified HUB sources?: _____%
(List HUB Subcontractor information below).

HUB Subcontractor Name: _____ HUB Status:
Certifying Agency (Check all applicable): ☐Texas Building & Procurement Commission ☐ Other
Address: _____ City: _____ State: _____ Zip:
Contact Person: _____ Title: _____ Phone No.: ( )
Subcontract Amount: $_____ Description of Work to be Performed:

HUB Subcontractor Name: _____ HUB Status:
Certifying Agency (Check all applicable): ☐Texas Building & Procurement Commission ☐ Other
Address: _____ City: _____ State: _____ Zip:
Contact Person: _____ Title: _____ Phone No.: ( )
Subcontract Amount: $_____ Description of Work to be Performed:

HUB Subcontractor Name: _____ HUB Status:
Certifying Agency (Check all applicable): ☐Texas Building & Procurement Commission ☐ Other
Address: _____ City: _____ State: _____ Zip:
Contact Person: _____ Title: _____ Phone No.: ( )
Subcontract Amount: $_____ Description of Work to be Performed:

Form **W-9**
(Rev. December 2014)
Department of the Treasury
Internal Revenue Service

Request for Taxpayer Identification Number and Certification

Give Form to the requester. Do not send to the IRS.

Print or type
See Specific Instructions on page 2.

1 Name (as shown on your income tax return). Name is required on this line; do not leave this line blank.

2 Business name/disregarded entity name, if different from above

3 Check appropriate box for federal tax classification; check only **one** of the following seven boxes:

☐ Individual/sole proprietor or single-member LLC ☐ C Corporation ☐ S Corporation ☐ Partnership ☐ Trust/estate

☐ Limited liability company. Enter the tax classification (C=C corporation, S=S corporation, P=partnership) ▶ _____

Note. For a single-member LLC that is disregarded, do not check LLC; check the appropriate box in the line above for the tax classification of the single-member owner.

☐ Other (see instructions) ▶

4 Exemptions (codes apply only to certain entities, not individuals; see instructions on page 3):

Exempt payee code (if any) _____

Exemption from FATCA reporting code (if any) _____

(Applies to accounts maintained outside the U.S.)

5 Address (number, street, and apt. or suite no.)

Requester's name and address (optional)

6 City, state, and ZIP code

7 List account number(s) here (optional)

Part I Taxpayer Identification Number (TIN)

Enter your TIN in the appropriate box. The TIN provided must match the name given on line 1 to avoid backup withholding. For individuals, this is generally your social security number (SSN). However, for a resident alien, sole proprietor, or disregarded entity, see the Part I instructions on page 3. For other entities, it is your employer identification number (EIN). If you do not have a number, see *How to get a TIN* on page 3.

Note. If the account is in more than one name, see the instructions for line 1 and the chart on page 4 for guidelines on whose number to enter.

Social security number

			–		–				

or

Employer identification number

		–							

Part II Certification

Under penalties of perjury, I certify that:

1. The number shown on this form is my correct taxpayer identification number (or I am waiting for a number to be issued to me); and
2. I am not subject to backup withholding because: (a) I am exempt from backup withholding, or (b) I have not been notified by the Internal Revenue Service (IRS) that I am subject to backup withholding as a result of a failure to report all interest or dividends, or (c) the IRS has notified me that I am no longer subject to backup withholding; and
3. I am a U.S. citizen or other U.S. person (defined below); and
4. The FATCA code(s) entered on this form (if any) indicating that I am exempt from FATCA reporting is correct.

Certification instructions. You must cross out item 2 above if you have been notified by the IRS that you are currently subject to backup withholding because you have failed to report all interest and dividends on your tax return. For real estate transactions, item 2 does not apply. For mortgage interest paid, acquisition or abandonment of secured property, cancellation of debt, contributions to an individual retirement arrangement (IRA), and generally, payments other than interest and dividends, you are not required to sign the certification, but you must provide your correct TIN. See the instructions on page 3.

Sign Here | **Signature of U.S. person** ▶ | **Date** ▶

General Instructions

Section references are to the Internal Revenue Code unless otherwise noted.

Future developments. Information about developments affecting Form W-9 (such as legislation enacted after we release it) is at *www.irs.gov/fw9*.

Purpose of Form

An individual or entity (Form W-9 requester) who is required to file an information return with the IRS must obtain your correct taxpayer identification number (TIN) which may be your social security number (SSN), individual taxpayer identification number (ITIN), adoption taxpayer identification number (ATIN), or employer identification number (EIN), to report on an information return the amount paid to you, or other amount reportable on an information return. Examples of information returns include, but are not limited to, the following:

- Form 1099-INT (interest earned or paid)
- Form 1099-DIV (dividends, including those from stocks or mutual funds)
- Form 1099-MISC (various types of income, prizes, awards, or gross proceeds)
- Form 1099-B (stock or mutual fund sales and certain other transactions by brokers)
- Form 1099-S (proceeds from real estate transactions)
- Form 1099-K (merchant card and third party network transactions)
- Form 1098 (home mortgage interest), 1098-E (student loan interest), 1098-T (tuition)
- Form 1099-C (canceled debt)
- Form 1099-A (acquisition or abandonment of secured property)

Use Form W-9 only if you are a U.S. person (including a resident alien), to provide your correct TIN.

If you do not return Form W-9 to the requester with a TIN, you might be subject to backup withholding. See *What is backup withholding?* on page 2.

By signing the filled-out form, you:

1. Certify that the TIN you are giving is correct (or you are waiting for a number to be issued),
2. Certify that you are not subject to backup withholding, or
3. Claim exemption from backup withholding if you are a U.S. exempt payee. If applicable, you are also certifying that as a U.S. person, your allocable share of any partnership income from a U.S. trade or business is not subject to the withholding tax on foreign partners' share of effectively connected income, and
4. Certify that FATCA code(s) entered on this form (if any) indicating that you are exempt from the FATCA reporting, is correct. See *What is FATCA reporting?* on page 2 for further information.

Note. If you are a U.S. person and a requester gives you a form other than Form W-9 to request your TIN, you must use the requester's form if it is substantially similar to this Form W-9.

Definition of a U.S. person. For federal tax purposes, you are considered a U.S. person if you are:

- An individual who is a U.S. citizen or U.S. resident alien;
- A partnership, corporation, company, or association created or organized in the United States or under the laws of the United States;
- An estate (other than a foreign estate); or
- A domestic trust (as defined in Regulations section 301.7701-7).

Special rules for partnerships. Partnerships that conduct a trade or business in the United States are generally required to pay a withholding tax under section 1446 on any foreign partners' share of effectively connected taxable income from such business. Further, in certain cases where a Form W-9 has not been received, the rules under section 1446 require a partnership to presume that a partner is a foreign person, and pay the section 1446 withholding tax. Therefore, if you are a U.S. person that is a partner in a partnership conducting a trade or business in the United States, provide Form W-9 to the partnership to establish your U.S. status and avoid section 1446 withholding on your share of partnership income.

In the cases below, the following person must give Form W-9 to the partnership for purposes of establishing its U.S. status and avoiding withholding on its allocable share of net income from the partnership conducting a trade or business in the United States:

- In the case of a disregarded entity with a U.S. owner, the U.S. owner of the disregarded entity and not the entity;
- In the case of a grantor trust with a U.S. grantor or other U.S. owner, generally, the U.S. grantor or other U.S. owner of the grantor trust and not the trust; and
- In the case of a U.S. trust (other than a grantor trust), the U.S. trust (other than a grantor trust) and not the beneficiaries of the trust.

Foreign person. If you are a foreign person or the U.S. branch of a foreign bank that has elected to be treated as a U.S. person, do not use Form W-9. Instead, use the appropriate Form W-8 or Form 8233 (see Publication 515, Withholding of Tax on Nonresident Aliens and Foreign Entities).

Nonresident alien who becomes a resident alien. Generally, only a nonresident alien individual may use the terms of a tax treaty to reduce or eliminate U.S. tax on certain types of income. However, most tax treaties contain a provision known as a "saving clause." Exceptions specified in the saving clause may permit an exemption from tax to continue for certain types of income even after the payee has otherwise become a U.S. resident alien for tax purposes.

If you are a U.S. resident alien who is relying on an exception contained in the saving clause of a tax treaty to claim an exemption from U.S. tax on certain types of income, you must attach a statement to Form W-9 that specifies the following five items:

1. The treaty country. Generally, this must be the same treaty under which you claimed exemption from tax as a nonresident alien.
2. The treaty article addressing the income.
3. The article number (or location) in the tax treaty that contains the saving clause and its exceptions.
4. The type and amount of income that qualifies for the exemption from tax.
5. Sufficient facts to justify the exemption from tax under the terms of the treaty article.

Example. Article 20 of the U.S.-China income tax treaty allows an exemption from tax for scholarship income received by a Chinese student temporarily present in the United States. Under U.S. law, this student will become a resident alien for tax purposes if his or her stay in the United States exceeds 5 calendar years. However, paragraph 2 of the first Protocol to the U.S.-China treaty (dated April 30, 1984) allows the provisions of Article 20 to continue to apply even after the Chinese student becomes a resident alien of the United States. A Chinese student who qualifies for this exception (under paragraph 2 of the first protocol) and is relying on this exception to claim an exemption from tax on his or her scholarship or fellowship income would attach to Form W-9 a statement that includes the information described above to support that exemption.

If you are a nonresident alien or a foreign entity, give the requester the appropriate completed Form W-8 or Form 8233.

Backup Withholding

What is backup withholding? Persons making certain payments to you must under certain conditions withhold and pay to the IRS 28% of such payments. This is called "backup withholding." Payments that may be subject to backup withholding include interest, tax-exempt interest, dividends, broker and barter exchange transactions, rents, royalties, nonemployee pay, payments made in settlement of payment card and third party network transactions, and certain payments from fishing boat operators. Real estate transactions are not subject to backup withholding.

You will not be subject to backup withholding on payments you receive if you give the requester your correct TIN, make the proper certifications, and report all your taxable interest and dividends on your tax return.

Payments you receive will be subject to backup withholding if:

1. You do not furnish your TIN to the requester,
2. You do not certify your TIN when required (see the Part II instructions on page 3 for details),
3. The IRS tells the requester that you furnished an incorrect TIN,
4. The IRS tells you that you are subject to backup withholding because you did not report all your interest and dividends on your tax return (for reportable interest and dividends only), or
5. You do not certify to the requester that you are not subject to backup withholding under 4 above (for reportable interest and dividend accounts opened after 1983 only).

Certain payees and payments are exempt from backup withholding. See *Exempt payee code* on page 3 and the separate Instructions for the Requester of Form W-9 for more information.

Also see *Special rules for partnerships* above.

What is FATCA reporting?

The Foreign Account Tax Compliance Act (FATCA) requires a participating foreign financial institution to report all United States account holders that are specified United States persons. Certain payees are exempt from FATCA reporting. See *Exemption from FATCA reporting code* on page 3 and the Instructions for the Requester of Form W-9 for more information.

Updating Your Information

You must provide updated information to any person to whom you claimed to be an exempt payee if you are no longer an exempt payee and anticipate receiving reportable payments in the future from this person. For example, you may need to provide updated information if you are a C corporation that elects to be an S corporation, or if you no longer are tax exempt. In addition, you must furnish a new Form W-9 if the name or TIN changes for the account; for example, if the grantor of a grantor trust dies.

Penalties

Failure to furnish TIN. If you fail to furnish your correct TIN to a requester, you are subject to a penalty of $50 for each such failure unless your failure is due to reasonable cause and not to willful neglect.

Civil penalty for false information with respect to withholding. If you make a false statement with no reasonable basis that results in no backup withholding, you are subject to a $500 penalty.

Criminal penalty for falsifying information. Willfully falsifying certifications or affirmations may subject you to criminal penalties including fines and/or imprisonment.

Misuse of TINs. If the requester discloses or uses TINs in violation of federal law, the requester may be subject to civil and criminal penalties.

Specific Instructions

Line 1

You must enter one of the following on this line; **do not** leave this line blank. The name should match the name on your tax return.

If this Form W-9 is for a joint account, list first, and then circle, the name of the person or entity whose number you entered in Part I of Form W-9.

a. **Individual.** Generally, enter the name shown on your tax return. If you have changed your last name without informing the Social Security Administration (SSA) of the name change, enter your first name, the last name as shown on your social security card, and your new last name.

Note. ITIN applicant: Enter your individual name as it was entered on your Form W-7 application, line 1a. This should also be the same as the name you entered on the Form 1040/1040A/1040EZ you filed with your application.

b. **Sole proprietor or single-member LLC.** Enter your individual name as shown on your 1040/1040A/1040EZ on line 1. You may enter your business, trade, or "doing business as" (DBA) name on line 2.

c. **Partnership, LLC that is not a single-member LLC, C Corporation, or S Corporation.** Enter the entity's name as shown on the entity's tax return on line 1 and any business, trade, or DBA name on line 2.

d. **Other entities.** Enter your name as shown on required U.S. federal tax documents on line 1. This name should match the name shown on the charter or other legal document creating the entity. You may enter any business, trade, or DBA name on line 2.

e. **Disregarded entity.** For U.S. federal tax purposes, an entity that is disregarded as an entity separate from its owner is treated as a "disregarded entity." See Regulations section 301.7701-2(c)(2)(iii). Enter the owner's name on line 1. The name of the entity entered on line 1 should never be a disregarded entity. The name on line 1 should be the name shown on the income tax return on which the income should be reported. For example, if a foreign LLC that is treated as a disregarded entity for U.S. federal tax purposes has a single owner that is a U.S. person, the U.S. owner's name is required to be provided on line 1. If the direct owner of the entity is also a disregarded entity, enter the first owner that is not disregarded for federal tax purposes. Enter the disregarded entity's name on line 2, "Business name/disregarded entity name." If the owner of the disregarded entity is a foreign person, the owner must complete an appropriate Form W-8 instead of a Form W-9. This is the case even if the foreign person has a U.S. TIN.

Line 2

If you have a business name, trade name, DBA name, or disregarded entity name, you may enter it on line 2.

Line 3

Check the appropriate box in line 3 for the U.S. federal tax classification of the person whose name is entered on line 1. Check only one box in line 3.

Limited Liability Company (LLC). If the name on line 1 is an LLC treated as a partnership for U.S. federal tax purposes, check the "Limited Liability Company" box and enter "P" in the space provided. If the LLC has filed Form 8832 or 2553 to be taxed as a corporation, check the "Limited Liability Company" box and in the space provided enter "C" for C corporation or "S" for S corporation. If it is a single-member LLC that is a disregarded entity, do not check the "Limited Liability Company" box; instead check the first box in line 3 "Individual/sole proprietor or single-member LLC."

Line 4, Exemptions

If you are exempt from backup withholding and/or FATCA reporting, enter in the appropriate space in line 4 any code(s) that may apply to you.

Exempt payee code.

- Generally, individuals (including sole proprietors) are not exempt from backup withholding.
- Except as provided below, corporations are exempt from backup withholding for certain payments, including interest and dividends.
- Corporations are not exempt from backup withholding for payments made in settlement of payment card or third party network transactions.
- Corporations are not exempt from backup withholding with respect to attorneys' fees or gross proceeds paid to attorneys, and corporations that provide medical or health care services are not exempt with respect to payments reportable on Form 1099-MISC.

The following codes identify payees that are exempt from backup withholding. Enter the appropriate code in the space in line 4.

1—An organization exempt from tax under section 501(a), any IRA, or a custodial account under section 403(b)(7) if the account satisfies the requirements of section 401(f)(2)

2—The United States or any of its agencies or instrumentalities

3—A state, the District of Columbia, a U.S. commonwealth or possession, or any of their political subdivisions or instrumentalities

4—A foreign government or any of its political subdivisions, agencies, or instrumentalities

5—A corporation

6—A dealer in securities or commodities required to register in the United States, the District of Columbia, or a U.S. commonwealth or possession

7—A futures commission merchant registered with the Commodity Futures Trading Commission

8—A real estate investment trust

9—An entity registered at all times during the tax year under the Investment Company Act of 1940

10—A common trust fund operated by a bank under section 584(a)

11—A financial institution

12—A middleman known in the investment community as a nominee or custodian

13—A trust exempt from tax under section 664 or described in section 4947

The following chart shows types of payments that may be exempt from backup withholding. The chart applies to the exempt payees listed above, 1 through 13.

IF the payment is for . . .	THEN the payment is exempt for . . .
Interest and dividend payments	All exempt payees except for 7
Broker transactions	Exempt payees 1 through 4 and 6 through 11 and all C corporations. S corporations must not enter an exempt payee code because they are exempt only for sales of noncovered securities acquired prior to 2012.
Barter exchange transactions and patronage dividends	Exempt payees 1 through 4
Payments over $600 required to be reported and direct sales over $5,000[1]	Generally, exempt payees 1 through 5[2]
Payments made in settlement of payment card or third party network transactions	Exempt payees 1 through 4

[1] See Form 1099-MISC, Miscellaneous Income, and its instructions.

[2] However, the following payments made to a corporation and reportable on Form 1099-MISC are not exempt from backup withholding: medical and health care payments, attorneys' fees, gross proceeds paid to an attorney reportable under section 6045(f), and payments for services paid by a federal executive agency.

Exemption from FATCA reporting code. The following codes identify payees that are exempt from reporting under FATCA. These codes apply to persons submitting this form for accounts maintained outside of the United States by certain foreign financial institutions. Therefore, if you are only submitting this form for an account you hold in the United States, you may leave this field blank. Consult with the person requesting this form if you are uncertain if the financial institution is subject to these requirements. A requester may indicate that a code is not required by providing you with a Form W-9 with "Not Applicable" (or any similar indication) written or printed on the line for a FATCA exemption code.

A—An organization exempt from tax under section 501(a) or any individual retirement plan as defined in section 7701(a)(37)

B—The United States or any of its agencies or instrumentalities

C—A state, the District of Columbia, a U.S. commonwealth or possession, or any of their political subdivisions or instrumentalities

D—A corporation the stock of which is regularly traded on one or more established securities markets, as described in Regulations section 1.1472-1(c)(1)(i)

E—A corporation that is a member of the same expanded affiliated group as a corporation described in Regulations section 1.1472-1(c)(1)(i)

F—A dealer in securities, commodities, or derivative financial instruments (including notional principal contracts, futures, forwards, and options) that is registered as such under the laws of the United States or any state

G—A real estate investment trust

H—A regulated investment company as defined in section 851 or an entity registered at all times during the tax year under the Investment Company Act of 1940

I—A common trust fund as defined in section 584(a)

J—A bank as defined in section 581

K—A broker

L—A trust exempt from tax under section 664 or described in section 4947(a)(1)

M—A tax exempt trust under a section 403(b) plan or section 457(g) plan

Note. You may wish to consult with the financial institution requesting this form to determine whether the FATCA code and/or exempt payee code should be completed.

Line 5

Enter your address (number, street, and apartment or suite number). This is where the requester of this Form W-9 will mail your information returns.

Line 6

Enter your city, state, and ZIP code.

Part I. Taxpayer Identification Number (TIN)

Enter your TIN in the appropriate box. If you are a resident alien and you do not have and are not eligible to get an SSN, your TIN is your IRS individual taxpayer identification number (ITIN). Enter it in the social security number box. If you do not have an ITIN, see *How to get a TIN* below.

If you are a sole proprietor and you have an EIN, you may enter either your SSN or EIN. However, the IRS prefers that you use your SSN.

If you are a single-member LLC that is disregarded as an entity separate from its owner (see *Limited Liability Company (LLC)* on this page), enter the owner's SSN (or EIN, if the owner has one). Do not enter the disregarded entity's EIN. If the LLC is classified as a corporation or partnership, enter the entity's EIN.

Note. See the chart on page 4 for further clarification of name and TIN combinations.

How to get a TIN. If you do not have a TIN, apply for one immediately. To apply for an SSN, get Form SS-5, Application for a Social Security Card, from your local SSA office or get this form online at *www.ssa.gov*. You may also get this form by calling 1-800-772-1213. Use Form W-7, Application for IRS Individual Taxpayer Identification Number, to apply for an ITIN, or Form SS-4, Application for Employer Identification Number, to apply for an EIN. You can apply for an EIN online by accessing the IRS website at *www.irs.gov/businesses* and clicking on Employer Identification Number (EIN) under Starting a Business. You can get Forms W-7 and SS-4 from the IRS by visiting IRS.gov or by calling 1-800-TAX-FORM (1-800-829-3676).

If you are asked to complete Form W-9 but do not have a TIN, apply for a TIN and write "Applied For" in the space for the TIN, sign and date the form, and give it to the requester. For interest and dividend payments, and certain payments made with respect to readily tradable instruments, generally you will have 60 days to get a TIN and give it to the requester before you are subject to backup withholding on payments. The 60-day rule does not apply to other types of payments. You will be subject to backup withholding on all such payments until you provide your TIN to the requester.

Note. Entering "Applied For" means that you have already applied for a TIN or that you intend to apply for one soon.

Caution: *A disregarded U.S. entity that has a foreign owner must use the appropriate Form W-8.*

Part II. Certification

To establish to the withholding agent that you are a U.S. person, or resident alien, sign Form W-9. You may be requested to sign by the withholding agent even if items 1, 4, or 5 below indicate otherwise.

For a joint account, only the person whose TIN is shown in Part I should sign (when required). In the case of a disregarded entity, the person identified on line 1 must sign. Exempt payees, see *Exempt payee code* earlier.

Signature requirements. Complete the certification as indicated in items 1 through 5 below.

1. Interest, dividend, and barter exchange accounts opened before 1984 and broker accounts considered active during 1983. You must give your correct TIN, but you do not have to sign the certification.

2. Interest, dividend, broker, and barter exchange accounts opened after 1983 and broker accounts considered inactive during 1983. You must sign the certification or backup withholding will apply. If you are subject to backup withholding and you are merely providing your correct TIN to the requester, you must cross out item 2 in the certification before signing the form.

3. Real estate transactions. You must sign the certification. You may cross out item 2 of the certification.

4. Other payments. You must give your correct TIN, but you do not have to sign the certification unless you have been notified that you have previously given an incorrect TIN. "Other payments" include payments made in the course of the requester's trade or business for rents, royalties, goods (other than bills for merchandise), medical and health care services (including payments to corporations), payments to a nonemployee for services, payments made in settlement of payment card and third party network transactions, payments to certain fishing boat crew members and fishermen, and gross proceeds paid to attorneys (including payments to corporations).

5. Mortgage interest paid by you, acquisition or abandonment of secured property, cancellation of debt, qualified tuition program payments (under section 529), IRA, Coverdell ESA, Archer MSA or HSA contributions or distributions, and pension distributions. You must give your correct TIN, but you do not have to sign the certification.

What Name and Number To Give the Requester

For this type of account:	Give name and SSN of:
1. Individual	The individual
2. Two or more individuals (joint account)	The actual owner of the account or, if combined funds, the first individual on the account[1]
3. Custodian account of a minor (Uniform Gift to Minors Act)	The minor[2]
4. a. The usual revocable savings trust (grantor is also trustee) b. So-called trust account that is not a legal or valid trust under state law	The grantor-trustee[1] The actual owner[1]
5. Sole proprietorship or disregarded entity owned by an individual	The owner[3]
6. Grantor trust filing under Optional Form 1099 Filing Method 1 (see Regulations section 1.671-4(b)(2)(i)(A))	The grantor*
For this type of account:	**Give name and EIN of:**
7. Disregarded entity not owned by an individual	The owner
8. A valid trust, estate, or pension trust	Legal entity[4]
9. Corporation or LLC electing corporate status on Form 8832 or Form 2553	The corporation
10. Association, club, religious, charitable, educational, or other tax-exempt organization	The organization
11. Partnership or multi-member LLC	The partnership
12. A broker or registered nominee	The broker or nominee
13. Account with the Department of Agriculture in the name of a public entity (such as a state or local government, school district, or prison) that receives agricultural program payments	The public entity
14. Grantor trust filing under the Form 1041 Filing Method or the Optional Form 1099 Filing Method 2 (see Regulations section 1.671-4(b)(2)(i)(B))	The trust

[1] List first and circle the name of the person whose number you furnish. If only one person on a joint account has an SSN, that person's number must be furnished.

[2] Circle the minor's name and furnish the minor's SSN.

[3] You must show your individual name and you may also enter your business or DBA name on the "Business name/disregarded entity" name line. You may use either your SSN or EIN (if you have one), but the IRS encourages you to use your SSN.

[4] List first and circle the name of the trust, estate, or pension trust. (Do not furnish the TIN of the personal representative or trustee unless the legal entity itself is not designated in the account title.) Also see *Special rules for partnerships* on page 2.

*Note. Grantor also must provide a Form W-9 to trustee of trust.

Note. If no name is circled when more than one name is listed, the number will be considered to be that of the first name listed.

Secure Your Tax Records from Identity Theft

Identity theft occurs when someone uses your personal information such as your name, SSN, or other identifying information, without your permission, to commit fraud or other crimes. An identity thief may use your SSN to get a job or may file a tax return using your SSN to receive a refund.

To reduce your risk:

- Protect your SSN,
- Ensure your employer is protecting your SSN, and
- Be careful when choosing a tax preparer.

If your tax records are affected by identity theft and you receive a notice from the IRS, respond right away to the name and phone number printed on the IRS notice or letter.

If your tax records are not currently affected by identity theft but you think you are at risk due to a lost or stolen purse or wallet, questionable credit card activity or credit report, contact the IRS Identity Theft Hotline at 1-800-908-4490 or submit Form 14039.

For more information, see Publication 4535, Identity Theft Prevention and Victim Assistance.

Victims of identity theft who are experiencing economic harm or a system problem, or are seeking help in resolving tax problems that have not been resolved through normal channels, may be eligible for Taxpayer Advocate Service (TAS) assistance. You can reach TAS by calling the TAS toll-free case intake line at 1-877-777-4778 or TTY/TDD 1-800-829-4059.

Protect yourself from suspicious emails or phishing schemes. Phishing is the creation and use of email and websites designed to mimic legitimate business emails and websites. The most common act is sending an email to a user falsely claiming to be an established legitimate enterprise in an attempt to scam the user into surrendering private information that will be used for identity theft.

The IRS does not initiate contacts with taxpayers via emails. Also, the IRS does not request personal detailed information through email or ask taxpayers for the PIN numbers, passwords, or similar secret access information for their credit card, bank, or other financial accounts.

If you receive an unsolicited email claiming to be from the IRS, forward this message to *phishing@irs.gov*. You may also report misuse of the IRS name, logo, or other IRS property to the Treasury Inspector General for Tax Administration (TIGTA) at 1-800-366-4484. You can forward suspicious emails to the Federal Trade Commission at: *spam@uce.gov* or contact them at *www.ftc.gov/idtheft* or 1-877-IDTHEFT (1-877-438-4338).

Visit IRS.gov to learn more about identity theft and how to reduce your risk.

Privacy Act Notice

Section 6109 of the Internal Revenue Code requires you to provide your correct TIN to persons (including federal agencies) who are required to file information returns with the IRS to report interest, dividends, or certain other income paid to you; mortgage interest you paid; the acquisition or abandonment of secured property; the cancellation of debt; or contributions you made to an IRA, Archer MSA, or HSA. The person collecting this form uses the information on the form to file information returns with the IRS, reporting the above information. Routine uses of this information include giving it to the Department of Justice for civil and criminal litigation and to cities, states, the District of Columbia, and U.S. commonwealths and possessions for use in administering their laws. The information also may be disclosed to other countries under a treaty, to federal and state agencies to enforce civil and criminal laws, or to federal law enforcement and intelligence agencies to combat terrorism. You must provide your TIN whether or not you are required to file a tax return. Under section 3406, payers must generally withhold a percentage of taxable interest, dividend, and certain other payments to a payee who does not give a TIN to the payer. Certain penalties may also apply for providing false or fraudulent information.

CERTIFICATION REGARDING DEBARMENT

REQUEST FOR BIDS

Hidalgo County

(All funding sources, programs & entities)

"Pipes & Related Miscellaneous Items"

RFB No.: 2017-046-04-05-FAZ

Certification
Regarding Debarment, Suspension and Ineligibility

As is required by the Federal Regulations Implementing Executive Order 12549, Debarment and Suspension, 45 CFR Part 76, Government-wide Debarment and Suspension, the applicant certifies, to the best of his or her knowledge and belief, that both it and its principals:

a. Are not presently debarred, suspended, proposed for debarment, declared ineligible, or voluntarily excluded from participation in this transaction by any federal department or agency;

b. Have not within a three-year period preceding this bid proposal and/or application been convicted of or had a civil judgment rendered against them for commission of fraud or a criminal offense in connection with obtaining, attempting to obtain, or performing a public (federal, state, or local) transaction or contract under a public transaction, violation of federal or state antitrust statutes or commission of embezzlement, theft, forgery, bribery, falsification or destruction of records, making false statements, or receiving stolen property;

c. Are not presently indicted for or otherwise criminally or civilly charged by a government entity with commission of any of the offenses enumerated herein; and

d. Have not within a three-year period preceding this bid proposal and/or application had one or more public transactions terminated for cause or default.

Signature:_____
Print Name:_____
Title:_____
Telephone Number:_____
Date:_____

If the bidder is unable to certify to all of the statements in this Certification, such bidder should attach an explanation to this proposal.

EXHIBIT "G"

APPENDICES

APPENDIX A

During the performance of this contract, the contractor, for itself, its assignees, and successors in interest (hereinafter referred to as the "contractor") agrees as follows:

1. **Compliance with Regulations**: The contractor (hereinafter includes consultants)will comply with the Acts and the Regulations relative to Nondiscrimination in Federally-assisted programs of the U.S. Department of Transportation, the Federal Highway Administration, as they may be amended from time to time, which are herein incorporated by reference and made a part of this contract.

2. **Nondiscrimination**: The contractor, with regard to the work performed by it during the contract, will not discriminate on the grounds of race, color, or national origin in the selection and retention of subcontractors, including procurements of materials and leases of equipment. The contractor will not participate directly or indirectly in the discrimination prohibited by the Acts and the Regulations, including employment practices when the contract covers any activity, project, or program set forth in Appendix B of49 CFR Part 21.

3. **Solicitations for Subcontracts, Including Procurements of Materials and Equipment**: In all solicitations, either by competitive bidding, or negotiation made by the contractor for work to be performed under a subcontract, including procurements of materials, or leases of equipment, each potential subcontractor or supplier will be notified by the contractor of the contractor's obligations under this contract and the Acts and the Regulations relative to Nondiscrimination on the grounds of race, color, or national origin.

4. **Information and Reports**: The contractor will provide all information and reports required by the Acts, the Regulations, and directives issued pursuant thereto and will permit access to its books, records, accounts, other sources of information, and its facilities as may be determined by the Recipient or the Federal Highway Administration to be pertinent to ascertain compliance with such Acts, Regulations, and instructions. Where any information required of a contractor is in the exclusive possession of another who fails or refuses to furnish the information, the contractor will so certify to the Recipient or the Federal Highway Administration, as appropriate, and will set forth what efforts it has made to obtain the information.

5. **Sanctions for Noncompliance**: In the event of a contractor's noncompliance with the Nondiscrimination provisions of this contract, the Recipient will impose such contract sanctions as it or the Federal Highway Administration may determine to be appropriate, including, but not limited to:

   a. withholding payments to the contractor under the contract until the contractor complies; and/or
   b. cancelling, terminating, or suspending contract, in whole or in part.

6. **Incorporation of Provisions**: The contractor will include the provisions of paragraphs one through six in every subcontract, including procurements of materials and leases of equipment, unless exempt by the Acts, the Regulations and directives issued pursuant thereto. The contractor will take action with respect to any subcontract or procurement as the Recipient or the Federal Highway Administration may direct as a means of enforcing such provisions including sanctions for noncompliance. Provided, that if the contractor becomes involved in, or is threatened with litigation by a subcontractor, or supplier because of such direction, the contractor may request the Recipient to enter into any litigation to protect the interests of the Recipient. In addition, the contractor may request the United States to enter into the litigation to protect the interests of the United States.

APPENDIX B

CLAUSES FOR DEEDS TRANSFERRING UNITED STATES PROPERTY

The following clauses will be included in deeds effecting or recording the transfer of real property, structures, or improvements thereon, or granting interest therein from the United States pursuant to the provisions of Assurance 4:

NOW, THEREFORE, the U.S. Department of Transportation as authorized by law and upon the condition that the **COUNTY OF HIDALGO** will accept title to the lands and maintain the project constructed thereon in accordance with all applicable federal statutes, the Regulations for the Administration of all Department of Transportation programs, and the policies and procedures prescribed by the Federal Highway Administration of the U.S. Department of Transportation in accordance and in compliance with all requirements imposed by Title 49, Code of Federal Regulations, U.S. Department of Transportation, Subtitle A, Office of the Secretary, Part 21, Nondiscrimination in Federally-assisted programs of the U.S. Department of Transportation pertaining to and effectuating the provisions of Title VI of the Civil Rights Act of 1964 (78 Stat. 252; 42 U.S.C. § 2000d to 2000d-4), does hereby remise, release, quitclaim and convey unto the **COUNTY OF HIDALGO** all the right, title and interest of the U.S. Department of Transportation in and to said lands described in Exhibit 1 attached hereto and made a part hereof.

(HABENDUM CLAUSE)

TO HAVE AND TO HOLD said lands and interests therein unto **COUNTY OF HIDALGO** and its successors forever, subject, however, to the covenants, conditions, restrictions and reservations herein contained as follows, which will remain in effect for the period during which the real property or structures are used for a purpose for which Federal financial assistance is extended or for another purpose involving the provision of similar services or benefits and will be binding on the **COUNTY OF HIDALGO**, its successors and assigns.

The **COUNTY OF HIDALGO**, in consideration of the conveyance of said lands and interests in lands, does hereby covenant and agree as a covenant running with the land for itself, its successors and assigns, that (1) no person will on the grounds of race, color, or national origin, be excluded from participation in, be denied the benefits of, or be otherwise subjected to discrimination with regard to any facility located wholly or in part on, over ,or under such lands hereby conveyed [,] [and]* (2) that the **COUNTY OF HIDALGO** will use the lands and interests in lands and interests in lands so conveyed, in compliance with all requirements imposed by or pursuant to Title 49, Code of Federal Regulations, U.S. Department of Transportation, Subtitle A, Office of the Secretary, Part 21, Nondiscrimination in Federally-assisted programs of the U.S. Department of Transportation, Effectuation of Title VI of the Civil Rights Act of 1964, and as said Regulations and Acts may be amended[, and(3) that in the event of breach of any of the above-mentioned nondiscrimination conditions, the Department will have a right to enter or re-enter said lands and facilities on said land ,and that above described land and facilities will thereon revert to and vest in and become the absolute property of the U.S. Department of Transportation and its assigns as such interest existed prior to this instruction].*

(*Reverted clause and related language to be used only when it is determined that such a clause is necessary in order to make clear the purpose of Title VI.)

APPENDIX C

CLAUSES FOR TRANSFER OF REAL PROPERTY ACQUIRED OR IMPROVED UNDER THE ACTIVITY, FACILITY, OR PROGRAM

The following clauses will be included in deeds, licenses, leases, permits, or similar instruments entered into by the **COUNTY OF HIDALGO** pursuant to the provisions of Assurance 7(a):

A. The (grantee, lessee, permittee, etc. as appropriate) for himself/herself, his/her heirs, personal representatives, successors in interest, and assigns, as a part of the consideration hereof, does hereby covenant and agree [in the case of deeds and leases add "as a covenant running with the land"] that:

   1. In the event facilities are constructed, maintained, or otherwise operated on the property described in this (deed, license, lease, permit, etc.) for a purpose for which a U.S. Department of Transportation activity, facility, or program is extended or for another purpose involving the provision of similar services or benefits, the (grantee, licensee, lessee, permitted, etc.) will maintain and operate such facilities and services in compliance with all requirements imposed by the Acts and Regulations (as may be amended)such that no person on the grounds of race, color, or national origin, will be excluded from participation in, denied the benefits of, or be otherwise subjected to discrimination in the use of said facilities.

B. With respect to licenses, leases, permits, etc., in the event of breach of any of the above Nondiscrimination covenants, **COUNTY OF HIDALGO** will have the right to terminate the (lease, license, permit, etc.) and to enter, re-enter, and repossess said lands and facilities thereon, and hold the same as if the (lease, license, permit, etc.) had never been made or issued.*

C. With respect to a deed, in the event of breach of any of the above Nondiscrimination covenants, the **COUNTY OF HIDALGO** will have the right to enter or re-enter the lands and facilities thereon, and the above described lands and facilities will there upon revert to and vest in and become the absolute property of the **COUNTY OF HIDALGO** and its assigns.*

(*Reverted clause and related language to be used only when it is determined that such a clause is necessary in order to make clear the purpose of Title VI.)

APPENDIX D

CLAUSES FOR CONSTRUCTION/USE/ACCESS TO REAL PROPERTY ACQUIRED UNDER THE ACTIVITY, FACILITY OR PROGRAM

The following clauses will be included in deeds, licenses, permits, or similar instruments/agreements entered into by **COUNTY OF HIDALGO** pursuant to the provisions of Assurance 7(b):

A. The (grantee, licensee, permittee, etc., as appropriate) for himself/herself, his/her heirs, personal representatives, successors in interest, and assigns, as a part of the consideration hereof, does hereby covenant and agree (in the case of deeds and leases add, "as a covenant running with the land") that (1) no person on the ground of race, color ,or national origin, will be excluded from participation in, denied the benefits of, or be otherwise subjected to discrimination in the use of said facilities, (2) that in the construction of any improvements on, over, or under such land, and the furnishing of services thereon, no person on the ground of race, color, or national origin, will be excluded from participation in, denied the benefits of, or otherwise be subjected to discrimination, (3) that the (grantee, licensee, lessee, permittee, etc.) will use the premises in compliance with all other requirements imposed by or pursuant to the Acts and Regulations, as amended, set forth in this Assurance.

B. With respect to (licenses, leases, permits, etc.), in the event of breach of any of the above Nondiscrimination covenants, **COUNTY OF HIDALGO** will have the right to terminate the (license, permit, etc., as appropriate) and to enter or re-enter and repossess said land and the facilities thereon, and hold the same as if said(license, permit, etc., as appropriate) had never been made or issued.*

C. With respect to deeds, in the event of breach of any of the above Nondiscrimination covenants, **COUNTY OF HIDALGO** will there upon revert to and vest in and become the absolute property of **COUNTY OF HIDALGO** and its assigns.*

(*Reverted clause and related language to be used only when it is determined that such a clause is necessary in order to make clear the purpose of Title VI.)

APPENDIX E

During the performance of this contract, the contractor, for itself, its assignees, and successors in interest (hereinafter referred to as the "contractor") agrees to comply with the following nondiscrimination statutes and authorities; including but not limited to:

Pertinent Nondiscrimination Authorities:

- Title VI of the Civil Rights Act of 1964 (42 U.S.C. § 2000d et seq., 78 stat. 252), (prohibits discrimination on the basis of race, color, national origin); and 49CFR Part 21.
- The Uniform Relocation Assistance and Real Property Acquisition Policies Act of1970, (42U.S.C. § 4601), (prohibits unfair treatment of persons displaced or whose property has been acquired because of Federal or Federal-aid programs and projects);
- Federal-Aid Highway Act of 1973, (23U.S.C. § 324et seq.), (prohibits discrimination on the basis of sex);
- Section 504 of the Rehabilitation Act of 1973, (29U.S.C. § 794 et seq.), as amended, (prohibits discrimination on the basis of disability); and 49CFRPart 27;
- The Age Discrimination Act of 1975, as amended,(42U.S.C. § 6101 et seq.), (prohibits discrimination on the basis of age);
- Airport and Airway Improvement Act of 1982, (49U.S.C. § 4 71, Section 4 7123),as amended, (prohibits discrimination based on race, creed, color, national origin, or sex);
- The Civil Rights Restoration Act of 1987,(PL 100-209), (Broadened the scope, coverage and applicability of Title VI of the Civil Rights Act of 1964, The Age Discrimination Act of 1975 and Section 504 of the Rehabilitation Act of 1973, by expanding the definition of the terms "programs or activities" to include all of the programs or activities of the Federal-aid recipients, sub recipients and contractors, whether such programs or activities are Federally funded or not);
- Titles II and III of the Americans with Disabilities Act, which prohibit discrimination on the basis of disability in the operation of public entities, public and private transportation systems, places of public accommodation, and certain testing entities (42 U.S.C. §§ 12131-12189)as implemented by Department of Transportation regulations at 49C.F.R. parts 37 and 38;
- The Federal Aviation Administration's Nondiscrimination statute (49U.S.C. § 47123) (prohibits discrimination on the basis of race, color, national origin, and sex);
- Executive Order 12898, Federal Actions to Address Environmental Justice in Minority Populations and Low-Income Populations, which ensures discrimination against minority populations by discouraging programs, policies, and activities with disproportionately high and adverse human health or environmental effects on minority and low-income populations;
- Executive Order 13166, Improving Access to Services for Persons with Limited English Proficiency, and resulting agency guidance, national origin discrimination includes discrimination because of limited English proficiency (LEP). To ensure compliance with Title VI, you must take reasonable steps to ensure that LEP persons have meaningful access to your programs (70 Fed. Reg. at 74087 to 74100);
- Title IX of the Education Amendments of1972, as amended, which prohibits you from discriminating because of sex in education programs or activities (20 U .S.C. 1681 et seq).

HIDALGO COUNTY
(Including all funding sources, programs, and entities)
REQUEST FOR BIDS
"PIPES & RELATED MISCELLANEOUS ITEMS"

RFB No.: 2017-046-04-05-FAZ

RFB SUBMITTAL CHECK LIST

All forms listed below must be included in the RFB response.

Indicate with a check mark (✓) the Forms completed and included in this response:

_____ Page 8 of Legal Notice

_____ Exhibit "B" Bid Page

_____ Exhibit "C" Acknowledgement forms

_____ Exhibit "D" CIQ Form -Copy of Co. Clerk Recording fee receipt (if applicable)

_____ Exhibit "E" Vendor Bidder Applications and IRS form W-9

_____ Exhibit "F" Certification Regarding Debarment

_____ SAMS.gov Registration Acknowledgement www.sam.gov

_____ One (1) Original, Three (3) Copies of Bid(s) (see No. 2 of Legal Notice).

EXHIBIT “B”

BID PAGE

EXHIBIT "B" – BID PAGE
Hidalgo County (All funding sources, programs & entities)
"PIPES & Related Miscellaneous Items"
RFB No.: 2017-046-04-05-FAZ

CATEGORY (A) – PIPES

CORRUGATED POLYVINYL CHLORIDE (PVC) STORM SEWER PIPE

NIGP CODE: 665-89 Polyvinyl Chloride (PVC)

DESCRIPTION	PRICE	
12"	6.69	LF
15"	11.71	LF
18"	15.74	LF
24"	30.82	LF
30"	~~7.0 10.50~~ 44.40	LF
36"	65.63	LF
42"	~~7.17 8.19~~ 85.86	LF
48"	~~7.19 85.86~~ NO BID	LF

CORRUGATED STEEL STORM SEWER PIPE

NIGP CODE: 210-29 Corrugated Galvanized Metal Pipe
(UNIT PRICE INCLUDES ONE GASKETED BAND CONNECTION FOR EVERY 20 FOOT JOINT)

DIAMETER	TYPE "IR" PIPE PRICE	TYPE "I" PIPE PRICE	TYPE "IA" PIPE PRICE	
12"	NO BID	NO BID	NO BID	LF
15"				LF
18"				LF
24"				LF
30"				LF
36"				LF
42"				LF
48"				LF
54"				LF
60"				LF
66"				LF
72"				LF
78"				LF
84"				LF
90"				LF
96"				LF
102"				LF
108"				LF
114"				LF
120"				LF
126"				LF
132"				LF
138"				LF
144"				LF

OPENED
9:56
48-17
Witnessed

EXHIBIT "B" – BID PAGE
Hidalgo County (All funding sources, programs & entities)
"PIPES & Related Miscellaneous Items"
RFB No.: 2017-046-04-05-FAZ

REINFORCED CONCRETE PIPE – RUBBER GASKET JOINT PIPE NIGP CODE: 658-68							
DESCRIPTION	CLASS III PRICE		CLASS IV PRICE		CLASS V PRICE		
12"	No Bid	LF	No Bid	LF	No Bid	LF	
15"		LF		LF		LF	
18"		LF		LF		LF	
24"		LF		LF		LF	
30"		LF		LF		LF	
36"		LF		LF		LF	
42"		LF		LF		LF	
48"		LF		LF		LF	
54"		LF		LF		LF	
60"		LF		LF		LF	
72"		LF		LF		LF	

REINFORCED CONCRETE PIPE – TONGUE & GROOVE PIPE NIGP CODE: 658-68							
DESCRIPTION	CLASS III PRICE		CLASS IV PRICE		CLASS V PRICE		
12"	No Bid	LF	No Bid	LF	No Bid	LF	
15"		LF		LF		LF	
18"		LF		LF		LF	
24"		LF		LF		LF	
30"		LF		LF		LF	
36"		LF		LF		LF	
42"		LF		LF		LF	
48"		LF		LF		LF	
54"		LF		LF		LF	
60"		LF		LF		LF	
72"		LF		LF		LF	

OPENED 9:54 4-5-17 Witnessed

REINFORCED POLYTHYLENE PIPE – 20 FOOT JOINTS NIGP CODE: 658-58		
DESCRIPTION	PRICE	
24"	No Bid	LF
30"		LF
36"		LF
42"		LF
48"		LF
54"		LF
60"		LF
72"		LF
84"		LF
96"		LF

AWWA C900 PVC PLASTIC PRESSURE PIPE

NIGP CODE: 658-56 PLASTIC PIPES OR
NIGP CODE: 658-60 PVC PIPES

DESCRIPTION	DR 14 PRICE		DR 18 PRICE		DR 25 PRICE	
4"	2.48	LF	1.94	LF	1.42	LF
6"	4.82	LF	3.84	LF	2.79	LF
8"	8.28	LF	6.65	LF	4.80	LF
10"	12.60	LF	9.98	LF	7.25	LF
12"	17.80	LF	14.08	LF	10.25	LF

AWWA C905 PVC PLASTIC WATER PIPE

NIGP CODE: 658-56 PLASTIC PIPES OR
NIGP CODE: 658-60 PVC PIPES

DESCRIPTION	DR 18 PRICE		DR 25 PRICE		DR 32.5 PRICE		DR 41 PRICE		DR 51 PRICE	
14"	20.58	LF	15.12	LF	NO BID	LF	NO BID	LF	NO BID	LF
16"	24.63	LF	18.59	LF		LF		LF		LF
18"	33.49	LF	24.17	LF		LF		LF		LF
24"	75.11	LF	54.98	LF		LF		LF		LF
30"	120.13	LF	91.24	LF		LF		LF		LF
36"	206.11	LF	150.76	LF		LF		LF		LF
42"		LF		LF		LF		LF		LF
48"		LF		LF		LF		LF		LF

SDR 26 AND SDR 35 GASKETED GRAVITY SANITARY SEWER PIPE

NIGP CODE: 210-35
SEWER PIPE JOINT SEALING COMPOUND

SIZE OF PIPE	SDR 26		SDR 35	
4"	1.07	LF	0.80	LF
6"	2.38	LF	1.77	LF
8"	4.12	LF	3.04	LF
10"	6.46	LF	4.84	LF
12"	9.20	LF	6.95	LF
15"	13.98	LF	10.3	LF

OPENED
Witnessed

HIGH PERFORMANCE (HP) POLYPROPYLENE STORM PIPE

DESCRIPTION	PRICE	
12"	8.15	LF
15"	10.17	LF
18"	13.42	LF
24"	22.25	LF
30"	34.60	LF
36"	40.06	LF
42"	51.42	LF
48"	47.42	LF
60"	105.67	LF

HIGH DESTINY POLYETHYLENE PIPE (HDPE) NIGP CODE: 658-58 Polyethylene Pipe And Fitting		
DESCRIPTION	PRICE	
4"	1.07	LF
6"	2.66	LF
8"	4.39	LF
10"	6.17	LF
12"	6.17	LF
15"	9.47	LF
18"	12.80	LF
24"	19.84	LF
30"	30.59	LF
36"	38.49	LF
42"	53.55	LF
48"	59.58	LF
54"	NO BID	LF
60"	102.60	LF

PLUMBING PIPES – 20 FOOT SECTIONS NIGP CODE: 967-60	
PVC	PRICE
½"	2.80
1 ½"	9.20
2"	7.9. ~~58.00~~ 11.60
3"	23.80
4"	37.80

OPENED
9:56
4-5-17
Witnessed

PLUMBING PIPES – 20 FOOT SECTIONS NIGP CODE: 967-60	
COPPER	PRICE
½"	35.00
¾"	62.60

EXHIBIT "B" – BID PAGE
Hidalgo County (All funding sources, programs & entities)
"PIPES & Related Miscellaneous Items"
RFB No.: 2017-046-04-05-FAZ

OPENED 9:54 4-5-17 Witnessed

CATEGORY (B) – INLETS

NIGP CODE: 210-31

INLETS, AREA, SEWER DRAIN, PRECAST, CONCRETE, STORM DRAIN, **NO BOTTOM FLOORS**

DESCRIPTION	PRICE																
	2'	2 ½'	3'	3 ½'	4'	4 ½'	5'	5 ½'	6'	6 ½'	7'	7 ½'	8'	8 ½'	9'	9 ½'	10'
Type "A" Inlet (5' x 3')	915	981	1025	1092	1136	1203	1247	1314	1358	1425	1469	1481	1581	1647	1691	1758	1803
Type "A-1" Inlet (5' x 4')	NO BID																
Type "A-2" Inlet (5' x 5')	995	1076	1140	1212	1267	1347	1402	1484	1538	1620	1675	1756	1810	1893	1945	2026	2083
Type "A-3" Inlet (5' x 6')	NO BID																
Type "A" (SPL-1) Inlet (5' x 3')																	
Type "A-1" (SPL-1) Inlet (5' x 4')																	
Type "A-2" (SPL-1) Inlet (5' x 5')																	
Type "A-3" (SPL-1) Inlet (5' x 6')																	
TYPE "C" INLET 2' X 2'	412	478	468	700	728	850	895	962	1006	1128	1173	1295	1339	1462	1512	1634	1673
TYPE "C" INLET 3' X 3'	784	815	946	1076	1090	1220	1252	1382	1414	1544	1576	1699	1738	1868	1900	2030	2062
TYPE "C" INLET 4' X 4'	1022	1076	1270	1324	1517	1711	1765	1958	2012	2206	2260	2453	2507	2701	2755	2948	3002
TYPE "CC" INLET 5' x 3'	1144	1180	1360	1396	1526	1756	1742	1972	2008	2188	2224	2404	2440	2620	2656	2836	2872

EXHIBIT "B" – BID PAGE
Hidalgo County (All funding sources, programs & entities)
"PIPES & Related Miscellaneous Items"
RFB No.: 2017-046-04-05-FAZ

OPENED 9:54 4-5-17 Witnessed

	3	3½	4'	4½'	5'	5½'	6'	6½	7	7½	8	8½	9	9½	10
Type "F" Inlet (W=3')	NO BID	NO BID	2035	2220	2300	2485	2565	2750	2830	3015	3095	3280	3360	3545	3625	3810	3940
Type "F-1" Inlet (W=4')																	
Type "F-2" Inlet (W=5')																	
Type "F-3" Inlet (W=6')																	
Type "F" (SPL-1) Inlet (W=3')																	
Type "F-1" (SPL-1) Inlet (W=4')																	
Type "F-2" (SPL-1) Inlet (W=5')																	
Type "F-3" (SPL-1) Inlet (W=6')																	

CATEGORY (C) – MANHOLES, NO BOTTOM FLOORS

NIGP CODE: 890-30

MANHOLES

DESCRIPTION	PRICE														
	3'	3 ½'	4'	4 ½'	5'	5 ½'	6'	6 ½'	7'	7 ½'	8'	8 ½'	9'	9 ½'	10'
TYPE "A" MANHOLE	945	1012	1056	1123	1167	1234	1278	1345	1389	1456	1500	1567	1612	1678	1723
TYPE "A-1" MANHOLE	NO BID														
TYPE "M" MANHOLE															

CATEGORY (D) – MISCELLANEOUS

DESCRIPTION		
WATER VALVE	UNIT	PRICE
2"	EA	210.00
4"	EA	350.00
6"	EA	440.00
8"	EA	698.00
10"	EA	1160.00
90 DEGREE ELBOW		
2"	EA	16.54
4"	EA	30.34
6"	EA	49.61
8"	EA	72.14
10"	EA	114.80
45 DEGREE ELBOW		
2"	EA	16.54
4"	EA	25.01
6"	EA	40.18
8"	EA	58.63
10"	EA	85.69
STEEL PIPE CASING WITH SPACERS		
4"	LF	5.95
6"	LF	12.50
12"	LF	26.00
16"	LF	35.00
24"	LF	49.00
FIRE HYDRANT W/VALVE	EA	2080.00
PVC SCHEDULE 40 WATER LINE DR 18		
2"	LF	0.58
8"	LF	6.65
PVC SCHEDULE 40		
1.5"	LF	0.46
0.75"	LF	0.23
0.5"	LF	0.15
WATER SADDLE W/2' CORPORATE VALVE		
8" x 2"	EA	302.75

OPENED
9:56
4-5-17
Witnessed

EXHIBIT "B" – BID PAGE
Hidalgo County (All funding sources, programs & entities)
"PIPES & Related Miscellaneous Items"
RFB No.: 2017-046-04-05-FAZ

HP Dual Wall Marmac Couplers		
PIPE SIZE	PRICE	UNIT
12"	47.11	EA
15"	53.38	EA
18"	65.66	EA
24"	86.94	EA
30"	103.67	EA
36"	121.31	EA
42"	135.08	EA
48"	149.50	EA
60"	244.90	EA

HP Dual Wall Fabricated Tees		
PIPE SIZE	PRICE	UNIT
12"	177.47	EA
15"	245.20	EA
18"	372.01	EA
24"	568.35	EA
30"	1346.56	EA
36"	1498.56	EA
42"	2001.00	EA
48"	2559.49	EA
60"	4349.64	EA

OPENED
9:56
4-5-17
Witnessed

HP Dual Wall Fabricated Bends						
PIPE SIZE	11.25 Bend	22.5 Bend	30* Bend	45* Bend	90* Bend	Unit
12"	75.68	76.13	85.40	105.49	92.90	EA
15"	118.75	118.75	128.36	145.52	167.94	EA
18"	161.65	161.65	177.70	193.89	235.60	EA
24"	334.93	340.40	361.10	384.40	452.35	EA
30"	463.64	505.64	605.40	598.62	771.13	EA
36"	650.76	744.87	844.36	810.64	976.96	EA
42"	815.84	979.51	1012.16	1039.70	1249.87	EA
48"	993.70	1219.05	1261.65	1286.19	1353.54	EA
60"	1460.91	1938.16	1893.25	2147.10	2483.74	EA

EXHIBIT "B" – BID PAGE
Hidalgo County (All funding sources, programs & entities)
"PIPES & Related Miscellaneous Items"
RFB No.: 2017-046-04-05-FAZ

BIDDER/COMPANY NAME: Ferguson Waterworks

ADDRESS: 1900 W. Expressway 83

CITY: Mission STATE: TX ZIPCODE: 78572

PHONE No: 956-584-9199 FAX No: 956-584-7487 CELL № 956-459-5026

AUTHORIZED SIGNATURE: Frank Guerra

PRINTED NAME: Frank Guerra

TITLE: Branch Manager DATE: 04/04/17

EMAIL: frank.guerra@ferguson.com

EXHIBIT “C”

CERTIFICATE OF INSURANCE

CERTIFICATE OF LIABILITY INSURANCE

DATE (MM/DD/YYYY): 04/12/2017

THIS CERTIFICATE IS ISSUED AS A MATTER OF INFORMATION ONLY AND CONFERS NO RIGHTS UPON THE CERTIFICATE HOLDER. THIS CERTIFICATE DOES NOT AFFIRMATIVELY OR NEGATIVELY AMEND, EXTEND OR ALTER THE COVERAGE AFFORDED BY THE POLICIES BELOW. THIS CERTIFICATE OF INSURANCE DOES NOT CONSTITUTE A CONTRACT BETWEEN THE ISSUING INSURER(S), AUTHORIZED REPRESENTATIVE OR PRODUCER, AND THE CERTIFICATE HOLDER.

IMPORTANT: If the certificate holder is an ADDITIONAL INSURED, the policy(ies) must have ADDITIONAL INSURED provisions or be endorsed. If SUBROGATION IS WAIVED, subject to the terms and conditions of the policy, certain policies may require an endorsement. A statement on this certificate does not confer rights to the certificate holder in lieu of such endorsement(s).

PRODUCER

Willis of Pennsylvania
100 Matsonford Road
Building Five, Suite 200
Radnor, PA 19087-4582

CONTACT NAME:
PHONE (A/C, NO, EXT): 610-964-8700 FAX (A/C, NO): 610-254-5600
E-MAIL ADDRESS: certificates@willis.com

INSURER(S) AFFORDING COVERAGE		NAIC #
INSURER A:	National Union Fire Ins. Co. of Pittsburg	19445-002
INSURER B:	National Union Fire Ins. Co. of Pittsburg	19445-000
INSURER C:	National Union Fire Ins. Co. of Pittsburg	19445-001
INSURER D:	New Hampshire Insurance Company	23841-001
INSURER E:		
INSURER F:		

INSURED

Ferguson Enterprises, Inc. and Subsidiaries
(See Attached Named Insured Schedule)
12500 Jefferson Avenue
Newport News, VA 23602

COVERAGES **CERTIFICATE NUMBER: 25421909** **REVISION NUMBER:**

THIS IS TO CERTIFY THAT THE POLICIES OF INSURANCE LISTED BELOW HAVE BEEN ISSUED TO THE INSURED NAMED ABOVE FOR THE POLICY PERIOD INDICATED. NOTWITHSTANDING ANY REQUIREMENT, TERM OR CONDITION OF ANY CONTRACT OR OTHER DOCUMENT WITH RESPECT TO WHICH THIS CERTIFICATE MAY BE ISSUED OR MAY PERTAIN. THE INSURANCE AFFORDED BY THE POLICIES DESCRIBED HEREIN IS SUBJECT TO ALL THE TERMS, EXCLUSIONS AND CONDITIONS OF SUCH POLICIES. LIMITS SHOWN MAY HAVE BEEN REDUCED BY PAID CLAIMS.

INSR LTR	TYPE OF INSURANCE	ADDL INSD	SUBR WVD	POLICY NUMBER	POLICY EFF (MM/DD/YYYY)	POLICY EXP (MM/DD/YYYY)	LIMITS	
A	X COMMERCIAL GENERAL LIABILITY	Y		GL712-9880	5/1/2017	5/1/2018	EACH OCCURRENCE	$ 2,000,000
	CLAIMS-MADE X OCCUR						DAMAGE TO RENTED PREMISES (Ea occurence)	$ 1,000,000
							MED EXP (Any one person)	$ 10,000
							PERSONAL & ADV INJURY	$ 2,000,000
	GEN'L AGGREGATE LIMIT APPLIES PER:						GENERAL AGGREGATE	$ 5,000,000
	POLICY X PRO-JECT X LOC						PRODUCTS - COMP/OP AGG	$ 2,000,000
	OTHER:							$
B	AUTOMOBILE LIABILITY			AOS CA1921927	5/1/2017	5/1/2018	COMBINED SINGLE LIMIT (Ea accident)	$ 5,000,000
B	X ANY AUTO			MA CA1921928	5/1/2017	5/1/2018	BODILY INJURY(Per person)	$
C	OWNED AUTOS ONLY / SCHEDULED AUTOS			VA CA1921929	5/1/2017	5/1/2018	BODILY INJURY(Per accident)	$
	X HIRED AUTOS ONLY / X NON-OWNED AUTOS ONLY						PROPERTY DAMAGE (Per accident)	$
	X Self-Insured / X Physical Damage							$
	UMBRELLA LIAB OCCUR						EACH OCCURRENCE	$
	EXCESS LIAB CLAIMS-MADE						AGGREGATE	$
	DED RETENTION $							$
D	WORKERS COMPENSATION AND EMPLOYERS' LIABILITY Y/N	N/A		WC023102516	5/1/2017	5/1/2018	X PER STATUTE / OTH-ER	
	ANY PROPRIETOR/PARTNER/EXECUTIVE OFFICER/MEMBER EXCLUDED? N (Mandatory in NH) If yes, describe under DESCRIPTION OF OPERATIONS below						E.L. EACH ACCIDENT	$ 2,000,000
							E.L. DISEASE - EA EMPLOYEE	$ 2,000,000
							E.L. DISEASE - POLICY LIMIT	$ 2,000,000

DESCRIPTION OF OPERATIONS / LOCATIONS / VEHICLES (ACORD 101, Additional Remarks Schedule, may be attached if more space is required)

See Attached for Additional Workers' Compensation Policies:

Workers' Compensation - ME
Policy No. WC023102515
Carrier: New Hampshire Insurance Company
Policy Period: 05/1/17 - 05/01/2018
Statutory
Limits:

CERTIFICATE HOLDER

Hidalgo County
Attn: Purchasing Department
2812 S. Highway Bus 281
Edinburg, TX 78539

CANCELLATION

SHOULD ANY OF THE ABOVE DESCRIBED POLICIES BE CANCELLED BEFORE THE EXPIRATION DATE THEREOF, NOTICE WILL BE DELIVERED IN ACCORDANCE WITH THE POLICY PROVISIONS.

AUTHORIZED REPRESENTATIVE

Linda D. Buelke

Coll:5060711 Tpl:2142944 Cert:25421909

© 1988-2015 ACORD CORPORATION. All rights reserved.

The ACORD name and logo are registered marks of ACORD

AGENCY CUSTOMER ID: 031419

LOC#:

ADDITIONAL REMARKS SCHEDULE

AGENCY	NAMED INSURED
Willis of Pennsylvania	Ferguson Enterprises, Inc. and Subsidiaries (See Attached Named Insured Schedule) 12500 Jefferson Avenue Newport News, VA 23602
POLICY NUMBER See First Page	
CARRIER: See First Page / NAIC CODE	EFFECTIVE DATE: See First Page

ADDITIONAL REMARKS

THIS ADDITIONAL REMARKS FORM IS A SCHEDULE TO ACORD FORM,
FORM NUMBER: 25 FORM TITLE: CERTIFICATE OF LIABILITY INSURANCE

EL Each Accident $2,000,000
EL Disease - Each Employee $2,000,000
EL Disease - Policy Limit $2,000,000

Workers' Compensation - CA
Policy No. WC023102514
Carrier: American Home Assurance Company
Policy Period: 05/1/2017-05/1/2018
Statutory
Limits:
EL Each Accident $2,000,000
EL Disease - Each Employee $2,000,000
EL Disease - Policy Limit $2,000,000

Workers' Compensation - FL
Policy No. WC02310513
Carrier: Illinois National Insurance Company
Policy Period: 05/1/2017-05/1/2018
Statutory
Limits:
EL Each Accident $2,000,000
EL Disease - Each Employee $2,000,000
EL Disease - Policy Limit $2,000,000

Workers' Compensation - MA & WI
Policy No. WC023102518
Carrier: New Hampshire Insurance Company
Policy Period: 05/1/2017-05/1/2018
Statutory
Limits:
EL Each Accident $2,000,000
EL Disease - Each Employee $2,000,000
EL Disease - Policy Limit $2,000,000

Workers' Compensation - AK,AZ,IL,KY,NC,NH,NJ,PA,UT,VA,VT
Policy No. WC023102517
Carrier: New Hampshire Insurance Company
Policy Period: 05/1/2017-05/1/2018
Statutory
Limits:
EL Each Accident $2,000,000
EL Disease - Each Employee $2,000,000
EL Disease - Policy Limit $2,000,000

County of Hidalgo is included as an Additional Insured under General Liability as required by written contract but only with respect to liability arising out of Named Insured's operations.

 © 2008 ACORD CORPORATION. All rights reserved.
The ACORD name and logo are registered marks of ACORD

Willis

Ferguson Enterprises, Inc. and Subsidiaries.
List of Named Insureds

Air Cold Supply
Air Cold Supply/Webb Distributors
Alamo Pipe & Supply
Alaska Pipe & Supply
Andrews Lighting Gallery, Inc. (dba Andrews Lighting & Hardware Gallery)
Arkansas Supply, Inc.
Ar-Jay Building Products, Inc. (dba The Ar-Jay Center)
Atlantic American Fire Equipment Company
Arkansas Supply
The Bath + Beyond
Bruce-Rogers Company
Build.com, Inc.
Builders Appliance Center, LLC
CAL-STEAM, a Wolseley Company
Camellia Valley Supply
Castle Supply Company, Inc.
CastleNorth
Central Pipe & Supply
CFP
Chadwick
City Lights Design Showroom
Clawfoot Supply, LLC
Clayton Group, Inc.
Clayton International, LLC
Cline Contract Sales
Colgan Cabinets
Colgan Distributors
Crow Company
Custom Lighting Incorporated
Custom Hardware and Accessories, Inc.
D & C Plumbing & Heating Supply
Davis & Warshow, Inc.
Davidson Electric Wholesale Supply
The Davidson Corporation, a Delaware Corporation
The Davidson Group Companies, Inc
Davidson Group Leasing
Davidson Pipe Company Inc., a New York Corporation
Davidson Pipe Supply Company, Inc.
Davies Water
Dealernet, LLC dba Dealernet
Decorative Product Source, Inc.
E & J Plumbing & Heating Supply Co.
Economy Plumbing and Heating Supply Co.
Endries International, Inc.
Energy & Process Corporation
Equarius, Inc. dba Equarius Waterworks, Meter & Automation Group
Factory Direct Appliance
Ferguson Bath Kitchen and Lighting Gallery
Ferguson Enterprises IV, Inc.
Ferguson Enterprises of Montana, Inc.
Ferguson Enterprises of Virginia, Inc.
Ferguson Enterprises V, Inc.
Ferguson Enterprises, Inc.
Ferguson Enterprises, Inc. dba WPCC Forwarding
Ferguson Enterprises, Inc. A Corp of Virginia
Ferguson Enterprises NY – Metro, Inc.
Ferguson Fire & Fabrication, Inc.
Ferguson Fire & Fabrication, Inc. (fka Action Fire Fab & Supply, Inc.)
Ferguson Fire & Fabrication, Inc. (fka Sierra Craft, Inc.)
Ferguson Full Service Supply
Ferguson Heating & Cooling
Ferguson Holdings, Inc.
Ferguson Hospitality Sales
Ferguson Industrial Plastics and Pump Division
Ferguson Integrated Systems Division, Inc.
Ferguson Intermountain Piping
Ferguson International
Ferguson Process Services
Ferguson Valve & Automation
Ferguson Waterworks
Ferguson Waterworks - Midwest Pipe
Ferguson Waterworks - Municipal Pipe
Ferguson Waterworks - Red Hed
Ferguson Waterworks EPPCO
Ferguson Waterworks International
Frischkorn, Inc.
Gabriel Scientific & Machine, LLC
Galleria Bath & Kitchen Showplace
Gilmour Supply Company, Inc.
Global HVAC Distributors, Inc.
Ferguson Enterprises, Inc. dba Groeniger

Willis

Ferguson Enterprises, Inc. and Subsidiaries.
List of Named Insureds

& Company
Gulf Refrigeration Supply
High Country Plumbing Supply
Home Equipment Company, Inc.
HP Products Corporation
HP Logistics, Inc.
Indiana Plumbing Supply Co., Inc.
Industrial Hub of the Carolinas
J&G Products
J.D. Daddario Company
Joseph G. Pollard Co., Inc.
Kandall Fabricating
Karl's Appliances, A Ferguson Enterprise
Lane Piping Co.
Lawrence Plumbing Supply Co.
Lighting Unlimited, LLC
Lincoln Products
Linwood Pipe and Supply
Living Direct, Inc.
Louisiana Utilities Supply Company
Louisiana Chemical Pipe, Valve & Fitting, Inc. dba Wolseley Industrial Group
LUSCO
Lyon Conklin & Co., Inc.
Mastercraft Cabinets
Matera Paper Company, Inc.
McFarland Supply Co., Inc.
Michigan Meter Technology
Michigan Pipe &Valve-Flint, Inc.
Michigan Pipe &Valve-Lansing, Inc.
Monotube Pile Corporation
Northern Water Works Supply, Inc.
Onda-Lay Pipe and Rental, Inc.
Page's Appliances
Palermo Supply
Park Supply
PCS Industries d/b/a HP Products Corp.
Pipe Products
Plumbing Décor
Plumb Source
Powell Pipe & Supply Company
Power Equipment Direct Inc.
P.V. Sullivan Supply Co., Inc.
R Supply Company
Ramapo Wholesalers
Record Supply Company
Redlon & Johnson
Reese Kitchen, Bath & Lighting Gallery
RenWes Sales
S.G. Supply Company

S.G. Supply Company dba SG Supply Co., a Ferguson Enterprise
Sierra Craft, Inc.
Signature Hardware
Ship-Pac, Inc. d/b/a HP Products Corp.
SOS Sales
Specialty Pipe & Tube, Inc.
Specialty Pipe & Tube of Texas, Inc.
Stock Loan Services LLC
Summer & Dunbar
Supply North Central Group
Tarpon Wholesale Supplies
T & A Valve Industries, Inc.
The Parnell-Martin Companies LLC
The Plumbers Warehouse
The Plumbing Source Inc.
The Stock Market
Tubeco Fabrication, Inc.
Underground Pipe & Valve Inc.
United Automatic
Water Works Supplies
Webb Distributors
Western Air Systems and Controls, Inc.
Westfield Lighting
WIA of California, Inc.
Wolseley Industrial Group
Wolseley Industrial Plastics
Wolseley Investments Acquisitions, Inc.
Wolseley Investments, Inc.
Wolseley NA Construction Services, LLC
Wolseley North America, Inc.
Wolseley North American Consulting, LLC
Wolseley North American Services, Inc.
WPCC Forwarding

Zimbra **rocio.villarreal@co.hidalgo.tx.us**

RE: C-17-046C-06-13-FERGUSON WATERWORKS

From : Steve Crain <scrain@atlashall.com> Mon, May 29, 2017 05:09 PM

Subject : RE: C-17-046C-06-13-FERGUSON WATERWORKS

To : 'Rocio Villarreal' <rocio.villarreal@co.hidalgo.tx.us>

The contract is OK.

From: Rocio Villarreal [mailto:rocio.villarreal@co.hidalgo.tx.us]
Sent: Friday, May 26, 2017 1:47 PM
To: Steve Crain <scrain@atlashall.com>
Subject: C-17-046C-06-13-FERGUSON WATERWORKS

Mr. Crain:

Please review and approve as to form.

Thank you.

ROCIO VILLARREAL
HIDALGO COUNTY PURCHASING DEPT.
CONTRACTS MANAGER
(956) 318-2626 Work
(956) 292-7000 Ext. 4868 Work
rocio.villarreal@co.hidalgo.tx.us
2812 S. Business Hwy 281
Edinburg, Texas 78539

AI-59997 **Closed Session** **24. C.**

CC - REGULAR

Meeting Date: 05/30/2017

Submitted By: Monica Salinas, EXECUTIVE OFFICE

Department: EXECUTIVE OFFICE

Information

CAPTION

Pending/potential litigation - Edinburg Municipal Airport & City of Edinburg Property

BACKGROUND

Fiscal Impact

Attachments

No file(s) attached.

Form Review

Inbox	Reviewed By	Date
Budget & Management	Veronica Ortiz	05/25/2017 09:48 AM
Final Approval	Monica Salinas	05/26/2017 02:58 PM

Form Started By: Monica Salinas Started On: 05/25/2017 09:15 AM

Final Approval Date: 05/26/2017

AI-59927 **Closed Session** **24. D.**

CC - REGULAR

Meeting Date: 05/30/2017

Submitted By: Monica Salinas, EXECUTIVE OFFICE

Department: EXECUTIVE OFFICE

Information

CAPTION

EEOC Charge No. 451-2017-00801; Agnete Antons v. County of Hidalgo

BACKGROUND

Fiscal Impact

Attachments

No file(s) attached.

Form Review

Inbox	Reviewed By	Date
Budget & Management	Veronica Ortiz	05/19/2017 02:10 PM
Final Approval	Monica Salinas	05/26/2017 02:58 PM
Form Started By: Monica Salinas		Started On: 05/19/2017 02:04 PM
Final Approval Date: 05/26/2017		

AI-59932 **Closed Session** **24. E.**

CC - REGULAR

Meeting Date: 05/30/2017

Submitted By: Monica Salinas, EXECUTIVE OFFICE

Department: EXECUTIVE OFFICE

Information

CAPTION

Claim of Estate of Gabriel Miranda, Jr., deceased

BACKGROUND

Fiscal Impact

Attachments

No file(s) attached.

Form Review

Inbox	Reviewed By	Date
Budget & Management	Veronica Ortiz	05/19/2017 03:57 PM
Final Approval	Monica Salinas	05/26/2017 02:58 PM
Form Started By: Monica Salinas		Started On: 05/19/2017 03:52 PM
Final Approval Date: 05/26/2017		

AI-59954 **Closed Session** **24. F.**

CC - REGULAR

Meeting Date: 05/30/2017

Submitted For: Armando Guzman, SAFETY DIVISION

Submitted By: Aida Alvarez, SAFETY DIVISION

Department: SAFETY DIVISION

Information

CAPTION

Claim of AT&T

BACKGROUND

Fiscal Impact

Attachments

No file(s) attached.

Form Review

Inbox	Reviewed By	Date
Budget & Management	Veronica Ortiz	05/23/2017 01:59 PM
Final Approval	Monica Salinas	05/26/2017 02:58 PM
Form Started By: Aida Alvarez		Started On: 05/23/2017 01:57 PM
Final Approval Date: 05/26/2017		

AI-59956 **Closed Session** **24. G.**

CC - REGULAR

Meeting Date: 05/30/2017

Submitted For: Armando Guzman, SAFETY DIVISION

Submitted By: Aida Alvarez, SAFETY DIVISION

Department: SAFETY DIVISION

Information

CAPTION

Claim of Texas Department of Public Safety

BACKGROUND

Fiscal Impact

Attachments

No file(s) attached.

Form Review

Inbox	Reviewed By	Date
Budget & Management	Veronica Ortiz	05/23/2017 02:01 PM
Final Approval	Monica Salinas	05/26/2017 02:58 PM
Form Started By: Aida Alvarez		Started On: 05/23/2017 02:00 PM
Final Approval Date: 05/26/2017		

AI-59958 **Closed Session** **24. H.**

CC - REGULAR

Meeting Date: 05/30/2017

Submitted For: Armando Guzman, SAFETY DIVISION

Submitted By: Aida Alvarez, SAFETY DIVISION

Department: SAFETY DIVISION

Information

CAPTION

Claim of Juan Carlos Garcia

BACKGROUND

Fiscal Impact

Attachments

No file(s) attached.

Form Review

Inbox	Reviewed By	Date
Budget & Management	Veronica Ortiz	05/23/2017 02:04 PM
Final Approval	Monica Salinas	05/26/2017 02:58 PM
Form Started By: Aida Alvarez		Started On: 05/23/2017 02:02 PM
Final Approval Date: 05/26/2017		

AI-59960 **Closed Session** **24. I.**

CC - REGULAR

Meeting Date: 05/30/2017

Submitted For: Armando Guzman, SAFETY DIVISION

Submitted By: Aida Alvarez, SAFETY DIVISION

Department: SAFETY DIVISION

Information

CAPTION

Claim of Severino Roque

BACKGROUND

Fiscal Impact

Attachments

No file(s) attached.

Form Review

Inbox	Reviewed By	Date
Budget & Management	Veronica Ortiz	05/23/2017 02:10 PM
Final Approval	Monica Salinas	05/26/2017 02:58 PM
Form Started By: Aida Alvarez		Started On: 05/23/2017 02:07 PM
Final Approval Date: 05/26/2017		

AI-59994 **Closed Session** **24. J.**

CC - REGULAR

Meeting Date: 05/30/2017

Submitted For: Armando Guzman, SAFETY DIVISION

Submitted By: Aida Alvarez, SAFETY DIVISION

Department: SAFETY DIVISION

Information

CAPTION

Claim of AT&T

BACKGROUND

Fiscal Impact

Attachments

No file(s) attached.

Form Review

Inbox	Reviewed By	Date
Budget & Management	Veronica Ortiz	05/24/2017 04:55 PM
Final Approval	Monica Salinas	05/26/2017 02:58 PM
Form Started By: Aida Alvarez		Started On: 05/24/2017 04:45 PM
Final Approval Date: 05/26/2017		

AI-59999 **Open Session** **26. C.**

CC - REGULAR

Meeting Date: 05/30/2017

Submitted By: Monica Salinas, EXECUTIVE OFFICE

Department: EXECUTIVE OFFICE

Information

CAPTION

Pending/potential litigation - Edinburg Municipal Airport & City of Edinburg Property

BACKGROUND

Fiscal Impact

Attachments

No file(s) attached.

Form Review

Inbox	Reviewed By	Date
Budget & Management	Veronica Ortiz	05/25/2017 09:48 AM
Final Approval	Monica Salinas	05/26/2017 02:58 PM

Form Started By: Monica Salinas Started On: 05/25/2017 09:23 AM

Final Approval Date: 05/26/2017

AI-59928 **Open Session** **26. D.**

CC - REGULAR

Meeting Date: 05/30/2017

Submitted By: Monica Salinas, EXECUTIVE OFFICE

Department: EXECUTIVE OFFICE

Information

CAPTION

EEOC Charge No. 451-2017-00801; Agnete Antons v. County of Hidalgo

BACKGROUND

Fiscal Impact

Attachments

No file(s) attached.

Form Review

Inbox	Reviewed By	Date
Budget & Management	Veronica Ortiz	05/19/2017 02:10 PM
Final Approval	Monica Salinas	05/26/2017 02:58 PM
Form Started By: Monica Salinas		Started On: 05/19/2017 02:05 PM
Final Approval Date: 05/26/2017		

AI-59933 **Open Session** **26. E.**

CC - REGULAR

Meeting Date: 05/30/2017

Submitted By: Monica Salinas, EXECUTIVE OFFICE

Department: EXECUTIVE OFFICE

Information

CAPTION

Claim of Estate of Gabriel Miranda, Jr., deceased

BACKGROUND

Fiscal Impact

Attachments

No file(s) attached.

Form Review

Inbox	Reviewed By	Date
Budget & Management	Veronica Ortiz	05/19/2017 03:57 PM
Final Approval	Monica Salinas	05/26/2017 02:58 PM
Form Started By: Monica Salinas		Started On: 05/19/2017 03:53 PM
Final Approval Date: 05/26/2017		

AI-59955 **Open Session** **26. F.**

CC - REGULAR

Meeting Date: 05/30/2017

Submitted For: Armando Guzman, SAFETY DIVISION

Submitted By: Aida Alvarez, SAFETY DIVISION

Department: SAFETY DIVISION

Information

CAPTION

Claim of AT&T

BACKGROUND

Fiscal Impact

Attachments

No file(s) attached.

Form Review

Inbox	Reviewed By	Date
Budget & Management	Veronica Ortiz	05/23/2017 01:59 PM
Final Approval	Monica Salinas	05/26/2017 02:58 PM
Form Started By: Aida Alvarez		Started On: 05/23/2017 01:58 PM
Final Approval Date: 05/26/2017		

AI-59957 **Open Session** **26. G.**

CC - REGULAR

Meeting Date: 05/30/2017

Submitted For: Armando Guzman, SAFETY DIVISION

Submitted By: Aida Alvarez, SAFETY DIVISION

Department: SAFETY DIVISION

Information

CAPTION

Claim of Texas Department of Public Safety

BACKGROUND

Fiscal Impact

Attachments

No file(s) attached.

Form Review

Inbox	Reviewed By	Date
Budget & Management	Veronica Ortiz	05/23/2017 02:02 PM
Final Approval	Monica Salinas	05/26/2017 02:58 PM
Form Started By: Aida Alvarez		Started On: 05/23/2017 02:01 PM
Final Approval Date: 05/26/2017		

AI-59959 **Open Session** **26. H.**

CC - REGULAR

Meeting Date: 05/30/2017

Submitted For: Armando Guzman, SAFETY DIVISION

Submitted By: Aida Alvarez, SAFETY DIVISION

Department: SAFETY DIVISION

Information

CAPTION

Claim of Juan Carlos Garcia

BACKGROUND

Fiscal Impact

Attachments

No file(s) attached.

Form Review

Inbox	Reviewed By	Date
Budget & Management	Veronica Ortiz	05/23/2017 02:04 PM
Final Approval	Monica Salinas	05/26/2017 02:58 PM
Form Started By: Aida Alvarez		Started On: 05/23/2017 02:03 PM
Final Approval Date: 05/26/2017		

AI-59961 **Open Session** **26. I.**

CC - REGULAR

Meeting Date: 05/30/2017

Submitted For: Armando Guzman, SAFETY DIVISION

Submitted By: Aida Alvarez, SAFETY DIVISION

Department: SAFETY DIVISION

Information

CAPTION

Claim of Severino Roque

BACKGROUND

Fiscal Impact

Attachments

No file(s) attached.

Form Review

Inbox	Reviewed By	Date
Budget & Management	Veronica Ortiz	05/23/2017 02:13 PM
Final Approval	Monica Salinas	05/26/2017 02:58 PM
Form Started By: Aida Alvarez		Started On: 05/23/2017 02:10 PM
Final Approval Date: 05/26/2017		

AI-59995 **Open Session** **26. J.**

CC - REGULAR

Meeting Date: 05/30/2017

Submitted For: Armando Guzman, SAFETY DIVISION

Submitted By: Aida Alvarez, SAFETY DIVISION

Department: SAFETY DIVISION

Information

CAPTION

Claim of AT&T

BACKGROUND

Fiscal Impact

Attachments

No file(s) attached.

Form Review

Inbox	Reviewed By	Date
Budget & Management	Veronica Ortiz	05/24/2017 04:55 PM
Final Approval	Monica Salinas	05/26/2017 02:58 PM
Form Started By: Aida Alvarez		Started On: 05/24/2017 04:46 PM
Final Approval Date: 05/26/2017		