CITY OF LA HABRA
PUBLIC WORKS DEPARTMENT
ENGINEERING DIVISION

110 E. LA HABRA BOULEVARD
LA HABRA, CA 90631
(562) 383-4151

SPECIFICATIONS FOR

EUCLID STREET REHABILITATION PROJECT

(From Whittier Boulevard to the Northerly City Limits)
CITY PROJECT NO. 1-R-21

CITY MANAGER	JIM SADRO
LA HABRA CITY COUNCIL	
MAYOR	DAREN NIGSARIAN
MAYOR PRO TEM	ROSE ESPINOZA
COUNCIL MEMBER	JAMES GOMEZ
COUNCIL MEMBER	JOSE MEDRANO
COUNCIL MEMBER	CARRIE SURICH

BID OPENING: Wednesday, September 25, 2024 3:00 P.M.

PLANS AND SPECIFICATIONS:
ONLINE DIGITAL COPIES ONLY

CITY OF LA HABRA
PUBLIC WORKS DEPARTMENT
ENGINEERING DIVISION

CONTRACT DOCUMENTS

EUCLID STREET REHABILITATION PROJECT

(From Whittier Boulevard to the Northerly City Limits)
CITY PROJECT NO. 1-R-21

AUGUST 2024

PLANS AND SPECIFICATIONS PREPARED BY:
ARDURRA GROUP, INC.

DESIGNED BY:

MIGUEL HURTADO, P.E
PROJECT ENGINEER
ARDURRA

RECOMMENDED BY:

ANDREW A. LUNA, P.E.
ASSOCIATE CIVIL ENGINEER

APPROVED BY:

For

ALBERT MENDOZA, P.E.
CITY ENGINEER

City of La Habra
"A Caring Community"

CITY HALL – ENGINEERING DIVISION

110 E. La Habra Boulevard
Post Office Box 337
La Habra, CA 90633-0785
Office: (562) 383-4151

September 19, 2024

ADDENDUM NO. 1

EUCLID STREET REHABILITATION PROJECT
CITY PROJECT NO. 1-R-21

To all prospective bidders and plan holders for the **EUCLID STREET REHABILITATION PROJECT, CITY PROJECT NO. 1-R-21.**

The intent of this Addendum No. 1 is to make revisions, additions and/or deletions, to the specifications of the Euclid Street Rehabilitation Project, Project No. 1-R-21; and are therefore hereby made a part of the contract bid documents.

A. **Project Specifications, Special Provisions, Section C:**

1) Delete fifth paragraph, page C-45: "Prime Coat shall be ePrime as manufactured by Ergon Asphalt & Emulsions, Inc., or approved equivalent".

2) Delete seventh paragraph, page C-54: "Prime Coat shall be ePrime as manufactured by Ergon Asphalt & Emulsions, Inc., or approved equivalent".

An acknowledgment of receipt of this Addendum No. 1 shall be submitted with the Bid Proposal. Failure to provide such acknowledgment shall render the bid as non-responsive and subject to rejection.

BY ORDER OF THE CITY OF LA HABRA

BY:_____
Albert Mendoza, P.E.
Deputy Director of Public Works/City Engineer

_____
Contractor (Signature)

_____
Name

_____
Date

TABLE OF CONTENTS

NOTICE INVITING BIDS A-1
INSTRUCTIONS TO BIDDERS B-1
SPECIAL PROVISIONS C-1
SECTION 1. DEFINITION OF TERMS C-1
SECTION 2. REQUIREMENTS AND CONDITIONS C-2
SECTION 3. SCOPE OF WORK C-6
SECTION 4. CONTROL OF THE WORK C-7
SECTION 5. CONTROL OF MATERIAL C-11
SECTION 6. LEGAL RELATIONS AND RESPONSIBILITIES C-14
SECTION 7. PROSECUTION AND PROGRESS C-23
SECTION 8. PAYMENTS C-23
SECTION 9. WORK SCHEDULES C-24
SECTION 10. CITY REQUIREMENTS C-24
SECTION 11. CONSTRUCTION DETAILS C-26
SECTION 12: CONSTRUCTION BID ITEMS C-30

PROPOSAL D-1
PROPOSAL D-1
BIDDER'S INFORMATION D-4
EXHIBIT A, BID SCHEDULE D-5
ACKNOWLEDGEMENT OF ADDENDA RECEIVED D-10
REFERENCES D-11
DBE BIDDER LIST D-13
VIOLATIONS OF FEDERAL, STATE, OR LOCAL LAWS D-14
DISQUALIFICATION OR DEBARMENT D-15
LIST OF SUBCONTRACTORS D-16
BID SECURITY FORM D-17
BID BOND D-18
NON-COLLUSION AFFIDAVIT D-19
WORKER'S COMPENSATION CERTIFICATE D-20
PUBLIC CONTRACT CODE SECTION 10285.1 STATEMENT D-21
PUBLIC CONTRACT CODE SECTION 10162 QUESTIONNAIRE D-22
PUBLIC CONTRACT CODE SECTION 10232 STATEMENT D-23

SAMPLE AGREEMENT E-1
1.0 DEFINITIONS E-1
2.0 SERVICES OF CONTRACTOR E-2
3.0 COMPENSATION E-4
4.0 PERFORMANCE SCHEDULE E-4
5.0 COORDINATION OF WORK E-5
6.0 INSURANCE, INDEMNIFICATION AND BONDS E-7

7.0 RECORDS AND REPORTS……E-9
8.0 GENERAL PROVISIONS.....E-10
LABOR AND MATERIAL PAYMENT BOND.....E-17
FAITHFUL PERFORMANCE BOND.....E-19
SUPPLEMENTAL INFORMATON TO BE COMPLETED BY PRINCIPAL.....E-21
TAX IDENTIFICATION NUMBER.....E-22
BID GUARANTEE.....E-23
STATEMENT OF NON-COLLUSION BY CONTRACTOR.....E-24
CERTIFICATE OF COMPLIANCE……..E-25
EXHIBIT A - SCOPE OF SERVICES E-26
EXHIBIT B - INSURANCE REQUIREMENTS E-27
EXHIBIT C - CERTIFICATES OF INSURANCE AND ENDORSEMENTS.....E-30
EXHIBIT D - CLAIMS PROCEDURE E-31

APPENDIX “A” - PLANS
APPENDIX “B”- STANDARD PLANS
APPENDIX “C” – CALTRANS ENCROACHMENT PERMIT 1222-NSN-0324
APPENDIX “D” - GEOTECHNICAL REPORT
APPENDIX “E” - CONSTRUCTION MATERIAL RECYCLING

- SECTION A -

NOTICE INVITING BIDS

CITY OF LA HABRA

NOTICE INVITING BIDS

NOTICE IS HEREBY GIVEN that sealed bids will be received by the City Clerk of the City of La Habra, California for furnishing all labor, services, materials, tools, equipment, supplies, transportation, utilities and all other items and facilities necessary therefor as provided in the Contract Documents for the**: EUCLID STREET REHABILITATION PROJECT FROM WHITTIER BOULEVARD TO THE NORTHERLY CITY LIMITS, CITY PROJECT NO. 1-R-21,** in strict compliance with the specifications, plans and contract documents on file at the Office of the City Clerk of the City of La Habra.

DATE OF OPENING BIDS: Bids will be received at the Office of the City Clerk of the City of La Habra until **3:00 P.M. on Wednesday, September 25, 2024,** at which time and place the bids will be publicly opened and read aloud. Bids shall be submitted in sealed envelopes marked on the outside: **"EUCLID STREET REHABILITATION PROJECT FROM WHITTIER BOULEVARD TO NORTHERLY CITY LIMITS, CITY PROJECT NO. 1-R-21. DO NOT OPEN WITH REGULAR MAIL."**

LOCATION OF WORK: The work to be constructed hereunder is located along Euclid Street, from Whittier Boulevard to the Northerly City Limits, within the City of La Habra, County of Orange. The work to be done is shown on plans attached to these specifications.

DESCRIPTION OF WORK: The work comprises the furnishing of all materials, equipment, tools, labor and incidentals as required by the Plans, Specifications and Contract Documents for the above stated project. The general items of work to be performed hereunder consist of but not be limited to **Mobilization, Construction Survey, Preparation and Implementation of Best Management Practices, Traffic Control, Unclassified Excavation, Asphalt Concrete Base Course, ARHM Pavement, Curb Gutter, Sidewalk, Wheelchair Ramps, Driveways, Signing, Striping and Markings, Adjustment of Manholes; Minor Drainage Facilities, Water Valve Adjustment, Traffic Loops, Caltrans Encroachment Permit and all other work as identified on the construction plans and specifications.**

BID PRICE: Bid Price shall include all labor, materials, and equipment to construct the work complete in place in accordance with the project plans, specifications and Agreement.

CONTRACTOR'S LICENSE: The City of La Habra has determined that a Class "**A**" General Engineering Contractor's License or "**C-12**" Earthwork and Paving Contractor's License is required for this project.

COMPLETION OF WORK: All work shall be completed within **eighty (80) working days** from the start date specified in the Notice to Proceed.

AWARD OF CONTRACT: The City of La Habra reserves the right, after opening the bids, to reject any or all bids, waive any informality or irregularity in such bids, or to award to the lowest responsible bidder and reject all other bids.

PROPOSAL GUARANTEE AND BONDS: Each bid must be accompanied by a certified cashier's check or by a corporate surety bond on the form furnished by the City of La Habra, as guarantee that the bidder will, if an award is made to him in accordance with the terms of his bid, promptly secure Worker's Compensation Insurance and Liability Insurance, execute the contract in the required form and furnish satisfactory bonds for the faithful performance of the contract and for the payment of claims of materialmen and workers thereunder. Said check or bidder's bond shall be in an amount of not less than ten percent (10%) of the amount of the bid. The Faithful Performance Bond shall be not less than one hundred percent (100%) of the total amount of the bid price named in the contract. The Payment Bond shall be not less than one hundred percent (100%) of the total amount of the bid price named in the contract. The City of La Habra reserves the right to reject any bond if, in the opinion of the Engineer, the Surety's acknowledgment is not in the form included in the contract documents or in another form substantially as prescribed by law.

PREVAILING RATES OF WAGES: Pursuant to the provisions of Section 1773 of the Labor Code of the State of California, the Director of Industrial Relations has ascertained the general prevailing rate of wages and employer payments for health and welfare, vacation, pension and similar purposes applicable to the work to be done. A copy of said wage rates is available on-line at: https://www.dir.ca.gov/dlsr/DPreWageDetermination.htm

The Contractor and all subcontractors are responsible to pay the prevailing rates of wages that are specified within ten (10) calendar days before the bid open day and shall post a copy of said wage rates at the project site. The statutory provisions for penalties for failure to pay prevailing wages will be enforced (Labor Code §1775) and the statutory provisions for failure to comply with the States' wage and hour laws will be enforced (Labor Code §1813).

DEBARMENT: No Contractor or Subcontractor may be awarded as a contractor on a bid proposal if they have been Debarred by the State pursuant to Labor Code Sections 1777.1 and 1777.7 and Public Contracts Code Section 6109.

APPRENTICE: The Contractor shall comply with all laws, rules, regulations, and all the requirements of the Labor Code including, but not limited to, Section 1725.5, 1776, 1777.5, and 1777.6 of the California Labor Code.

CONTRACT DOCUMENTS: The Contract Documents shall consist of the following: Notice Inviting Bids; Instructions to Bidders; Proposal; Bidder's Information; Bid Schedule; Acknowledgement of Addenda Received; References; DBE Bidder's List; Violations of Federal, State, or Local Laws; Disqualification or Debarment; List of Subcontractors; Bid Security Form; Bid Bond; Non-Collusion Affidavit; Worker's Compensation Certificate; Public Contract Code Section 10285.1 Statement; Public Contract Code Section 10162 Questionnaire; Public Contract Code Section 10232 Statement; Agreement; Labor and Material Payment Bond; Faithful Performance Bond; Supplemental Information to be Completed By Principal; Tax Identification

Number; Bid Guarantee; Statement of Non-Collusion By Contractor; Certificate of Compliance for Affirmative Action Requirements and Equal Employment Opportunity; Special Provisions; Drawings; and the Standard Specifications for Public Works Construction, 2021 Edition and supplements thereto, made a part by reference, together with all additions, deletions, modifications or interpretations of any of said documents, all of which are hereby made a part of this Notice Inviting Bids.

Specifications are available for inspection without charge, at the Office of the City Engineer of the City of La Habra, 110 E. La Habra Blvd., La Habra, California. A digital copy of said Contract Documents (saved in PDF format) is available free of charge, posted at the following website: http://www.ciplist.com/

ADDRESS AND MARKING OF PROPOSAL: The envelope enclosing the proposal shall be sealed and addressed to the City Clerk and hand delivered to the City Clerk at the Civic Center, 110 E. La Habra Blvd (Administration Department), or mailed to City Clerk, Civic Center, 110 E. La Habra Blvd, La Habra, California 90631. The envelope shall be plainly marked in the upper left-hand corner with the name and address of the bidder and shall bear the words "Proposal For" followed by the title of the specifications for the work, and the date and hour of opening bids. The certified or cashier's check, money order, or bidder's bond shall be enclosed in the same envelope with the proposal.

DEPARTMENT OF INDUSTRIAL RELATIONS (DIR) REQUIREMENT: No Contractor or Subcontractor may be listed on a bid proposal for a public works project unless registered with the Department of Industrial Relations (DIR) pursuant to Labor Code 1725.5 and Senate Bill 854. Payroll documents for the contractor and subcontractors should be submitted and registered on time with the DIR.

Under California Labor Code Section 1771.1, in order to be awarded and to perform work on public works projects, prime contractors and subcontractors must possess and maintain registration with the Department of Industrial Relations (DIR) at https://www.dir.ca.gov/public-works/contractor-registration.html. This is a separate requirement from the Contractors State License Board (CSLB) licensing requirement.

SUBMISSION OF QUESTIONS:

- Questions received after Thursday, September 12, 2024, 3:00 pm will not be considered.
- Questions or clarifications deemed by the City to be material change will be answered via issuance of an addendum and posted to the City's online bidding service, CIPlist.com.
- Only questions answered by formal written addenda shall be binding. Oral and other interpretations or clarifications shall be without legal effect. It is the Bidder's responsibility to be informed of any issued addenda and to include all such information in its Bid.
- Questions regarding this solicitation shall be submitted electronically to Albert Mendoza, PE, Deputy Dir. of Public Works/City Engineer, at AMendoza@lahabraca.gov

BID PROTEST: Bidders may file a "protest" of a Bid with the City Clerk. For a Bidder's protest to be considered valid, the protest must:

1) Be filed in writing seven (7) calendar days after the bid opening date:
2) Clearly identify the specific irregularity or accusation;
3) Specify, in detail, the grounds of the protest and the facts supporting the protest; and
4) Include all relevant supporting documentation with the protest at the time of filing.

If the protest does not comply with each of these requirements, it will be rejected as invalid. Should the protest be deemed to be valid, the Engineering Division shall review the basis of the protest and all relevant information. The Public Works Director or designee will provide a written response to the protestor. Should there be any appeal to the decision made by the City, the protester can file an appeal letter to the City Manager.

PLANNED BID and AWARD SCHEDULE:

Bid Advertisement: .....Friday, August 28, 2024
Requests for Information due by:…….Monday, September 16, 2024, 3:00 pm
Response to Requested for Information.....Wednesday, September 18, 5:00 pm
Bid Opening:.....Wednesday, September 25, 2024, 3:00 pm
Contract Award:…….. Monday, October 21, 2024

- SECTION B -

INSTRUCTIONS TO BIDDERS

CITY OF LA HABRA

INSTRUCTIONS TO BIDDERS

The following instructions and conditions apply to the attached bid and the bidder acknowledges the acceptance thereof by signing and filing said bid.

Each bidder shall state whether he/she is an individual, firm or corporation; if firm, give name of each member; if a corporation, give name of president, secretary, treasurer and manager.

Proposals shall be submitted to the City on forms prepared and furnished in the bid documents, or as provided by the Engineering Office of the City of La Habra. When presented, they must be completely made out in the manner and form indicated therein, showing the proposed prices clearly and legibly and must be properly signed by the bidder. Proposals presented otherwise may be rejected.

Each proposal so submitted, together with the required proposal guarantee hereinafter prescribed, shall be presented under sealed cover and must be filed prior to the time and place designated in the Notice Inviting Bids. A proposal so presented, however, may be withdrawn by the bidder provided the request therefor is made in writing, is signed by the bidder or his/her authorized representative and is filed prior to the time fixed for the opening of bids. The withdrawal of a bid proposal does not prejudice the right of the bidder to file a new bid.

All proposals submitted as hereinabove prescribed will be publicly opened and read at the time and place indicated in the Notice Inviting Bids.

Bids are required for the entire work. The amount of the bid for comparison purposes will be the total of all items.

The bidder shall set forth for each item of work, a unit price and an amount for the item in the respective space provided for this purpose. In the case of unit price items, the amount set forth under the "AMOUNT" column shall be the extension of the unit price bid on the basis of the estimated quantity for the item. In the case of discrepancy between the words and figures, the words shall prevail.

In case of discrepancy between the "Unit Price" and the "Amount" set forth for the item, the Unit Price shall prevail. However, if the amount set forth as a Unit Price is ambiguous, unintelligible or uncertain for any cause or is omitted or in the case where the Unit Price is the same amount as the entry in the "AMOUNT" column for the item, the "AMOUNT" price shall prevail in accordance with the following:

(1) As to lump sum items, the amount set forth in the "AMOUNT" column shall be the unit price.
(2) As to unit price items, the amount set forth in the "AMOUNT" column shall be divided by the estimated quantity for the item and the price thus obtained shall be the unit price.

In case of discrepancy between the sum of the individual "AMOUNT" prices, and the Total Bid Price, the sum of the individual "AMOUNT" prices will prevail.

Bidders must satisfy themselves by personal examination of the location of the proposed work and by personal examination of the proposed contract documents as to the actual conditions and the requirements of this work and shall not at any time after submission of the bid dispute, complain or assert that there was any misunderstanding in regard to the nature or the amount of work to be done unless a written change in these specifications or contract or written clarification thereof has been issued by the City.

Each bid must be in a sealed envelope which is to be clearly marked so as to identify it as a bid (such as "Sealed Bid - do not open with regular mail"), giving the number and name of the project or specification and the name of the bidder. These instructions are particularly necessary if your bid is transmitted by mail. Failure to identify the project or to address it to the City Clerk, Civic Center, 110 E. La Habra Blvd., La Habra, California 90631, will result in the opening of the envelopes with the regular mail and may thereby void the bid.

The City Council will award the contract to the lowest responsible bidder, however, said Council reserves the right to reject any or all bids, to waive any informality in the bids received and, if necessary, to take said bids under advisement for a period not to exceed sixty (60) days.

All proposal requirements and conditions as set forth in the Standard Specifications shall apply hereto.

APPROXIMATE ESTIMATE: The quantities shown in the proposal form and in the estimate included in the bid documents shall be considered as approximate only, being listed therein for the purpose of serving as a general indication of the amount of work or materials to be performed or furnished as a basis for the comparison of bids. The Council does not guarantee nor agree, either expressly or by implication, that the actual amounts required will correspond therewith, but reserves the right to increase or decrease the amount of any item, portion of work to be performed or material to be furnished, or to omit any such item or portion, in accordance with the provisions relative thereto set forth in the bid documents or Standard Specifications under which the work is to be constructed, without in any way invalidating the contract should such increase, decrease or omission be deemed necessary or expedient. The City reserves the right to increase or decrease the amount of any item as necessary due to budgetary requirements.

DISADVANTAGED BUSINESS ENTERPRISE (DBE) REQUIREMENTS: The City requires that Disadvantaged Business Enterprises (DBE's) have the opportunity to participate in public works projects. To assist the City in establishing future DBE goals, all contractors are required to submit a list of all subcontractors and suppliers, whether DBE or not, contracted during preparation of the bid. However, this bid has no set goal.

- SECTION C -

SPECIAL PROVISIONS

EUCLID STREET REHABILITATION PROJECT
FROM WHITTIER BOULEVARD TO THE NORTHERLY CITY LIMITS
CITY PROJECT NO. 1-R-21

SPECIAL PROVISIONS

SECTION 1. DEFINITION OF TERMS

CITY: The City of La Habra

CITY COUNCIL: The City Council of the City of La Habra.

ENGINEER: Any reference to the "Engineer" in the specifications shall be construed to mean the City Engineer of the City of La Habra or his authorized agents.

BIDDER: Any individual, firm or corporation submitting a bid to furnish the materials and equipment and perform the work herein specified, properly made out on the form furnished by the City Engineer, duly executed by the bidder and enclosed within a sealed envelope directed to the City Clerk, Civic Center, 110 E. La Habra Blvd., La Habra, California 90631.

BID FORMS: The blank forms prepared by the City on which the bidder must submit the bid.

CONTRACTOR: The bidder whose bid is accepted and to whom the contract is awarded.

CONTRACT: The Specifications, Special Provisions, the notice inviting bids, the bid and addenda of the Contract, and the agreement entered into pursuant thereto shall constitute the Contract between the City of La Habra and the Contractor.

LABORATORY: The designated laboratory authorized by the Engineer to test materials and work involved in the contract.

THE WORK: All the work required to be performed under the contract.

GENERAL CONSTRUCTION TERMS: Unless otherwise specifically defined herein or unless the content requires a different meaning, all words, terms and phrases having a well-known or technical meaning shall be so construed.

USE OF PRONOUNS: Words used herein in the masculine gender include the feminine and neuter and vice versa; the singular number includes the plural and the plural the singular. The word "person" includes a corporation, association or partnership.

SECTION: The part into which these Special Provisions are divided. Each section is designated by a whole number preceding its title.

ARTICLES: The parts into which sections are divided. Each article is designated by a number preceding its title, the first two figures to the right of the decimal point being the number of the article and the figures or figure to the left of the decimal point being the number of the section of which such article is a part. Thus: Article 11.05 indicates Article 5 of Section 11.

SUBDIVISIONS: The parts into which articles are divided. Each subdivision is designated by a number preceding its title, the figure or figures to the right of the article number being the number of the subdivision. Thus: Subdivision 11.05.2 indicates Subdivision 2 of Article 5 of Section 11.

STANDARD SPECIFICATIONS: The document entitled "Standard Specifications for Public Works Construction", written and promulgated by Public Works Standards, Inc. 2021 edition and supplements thereto, are hereinafter referred to as the Standard Specifications.

The Caltrans Standard Plans and Specifications and California Manual on Uniform Traffic Control Devices shall pertain to work on traffic signals, signing, striping, markings, and signs.

Other terms appearing in the Standard Specifications shall have the intent and meaning specified in Section 1, Definition of Terms, of the Standard Specifications. In case of conflict between the Standard Specifications and these Special Provisions, these Special Provisions shall take precedence over and be used in lieu of such conflicting portions of the Standard Specifications.

SECTION 2. REQUIREMENTS AND CONDITIONS

ARTICLE 2.01 EXAMINATION OF PLANS, SPECIFICATIONS, SPECIAL PROVISIONS, AND WORKSITE: Bidders must satisfy themselves by personal examination of the proposed work site and by such other means as they may prefer as to the actual conditions and requirements of the work. Bidders shall not at any time after submission of the bid, dispute, complain or assert that there was any misunderstanding in regard to the nature or amount of work to be done.

The City of La Habra, in accordance with Title VI of the Civil Rights Act of 1964 (78 Stat. 252) and the Regulations of the Department of Commerce (15 C.F.C., Part 8), issued pursuant to such Act, hereby notifies all bidders that it will affirmatively insure that the contract entered into pursuant to this advertisement will be awarded to the lowest responsible bidder without discrimination of the grounds of race, color or national origin.

ARTICLE 2.02 BID FORMS: All bids submitted shall be made on the blank forms to be obtained from the Engineer at his office. The bidder shall submit bid on the form furnished to him/her. Bids submitted on forms other than those provided by the Engineer as aforesaid will be disregarded. All bids shall give the price bid both in writing and figures and shall be signed by the bidder with his/her address. Bids shall be enclosed in a sealed envelope directed to the City Clerk, Civic Center, 110 E. La Habra Blvd., La Habra, California 90631.

ARTICLE 2.03 IRREGULAR BIDS: Bids may be rejected if they show any alterations of form, additions not called for, conditional bids, incomplete bids, erasures or irregularities of any kind.

ARTICLE 2.04 DISQUALIFICATION OF BIDDERS: The CITY COUNCIL may reject any and all proposals or bids should it deem this for the public good and the bid of any party who has been delinquent or unfaithful in any former contract with the CITY, and may reject all bids other than the lowest bid of any responsible bidder and may award the contract for said work or improvement to the lowest responsible bidder at the prices named in his bid.

ARTICLE 2.05 MATERIAL GUARANTEE: Before any bid is accepted, the bidder may be required to furnish a complete statement of the origin, composition and manufacture of any or all materials to be used in the construction of the work, together with samples which may be subjected to the tests provided for in these Specifications or in the Special Provisions to determine their quality and fitness for the work.

ARTICLE 2.06 BONDS: In lieu of Section 1-7.2 "Contract Bonds" of the Standard Specifications, the Contractor, simultaneously with the execution of the Agreement, shall furnish a surety bond in an amount equal to one hundred (100) percent of the contract price as security for the faithful performance of the contract and a separate surety bond in an amount equal to one hundred (100) percent of the contract price as security for the payment of all persons performing labor and furnishing materials in connection with the contract. Said bonds shall be secured from a Surety Company satisfactory to the City.

ARTICLE 2.07 BID GUARANTEE:

Subdivision 2.07.1: All bids shall be presented under sealed cover and shall be accompanied by cash, cashier's check, certified check or bidder's bond made payable to the City of La Habra for an amount equal to at least ten percent (10%) of the amount of said bid. No bid will be considered unless such cash, cashier's check, certified check or bidder's bond is enclosed therewith.

Subdivision 2.07.2: Return of Bid Guarantee: The bid guarantee of the bidder or bidders who are being considered for the award of Contract shall be held until the execution of said contract, and shall thereupon be returned to the bidder. Bid guarantee of other bidders will be returned to such bidders upon award of the Contract.

ARTICLE 2.08 AWARD OF CONTRACT: The award of contract, if it be awarded, will be within sixty (60) days of the opening of bids.

ARTICLE 2.09 EXECUTION OF CONTRACT: The contract, construction schedule, and bonds shall be executed and filed by the successful bidder with the City Clerk of the City of La Habra not later than ten (10) days after the award of contract.

All bidders may submit with their bids a sworn statement of their financial responsibility, technical ability and experience. Such sworn statement may be required to be furnished before award is made to any particular bidder.

The CITY COUNCIL may, upon the refusal or failure of successful lowest responsible bidder to accept the contract, award it to the second lowest responsible bidder. If the legislative body awards

the contract to the second lowest bidder, the amount of the lowest bidder's security shall be applied by the CITY to the difference between the low bid and the second lowest bid; and the surplus, if any, shall be returned to the lowest bidder if cash or a check is used, or to the surety company if bidder's bond is used.

ARTICLE 2.10 BEGINNING OF WORK: The Contractor shall begin work at the start date specified in the Notice To Proceed.

ARTICLE 2.11 PLANS AND SPECIFICATIONS: Specifications and bid documents are on file at the Office of the City Engineer, Civic Center, 110 E. La Habra Blvd., La Habra, California 90631. Digital copies of said Contract Documents (saved in PDF format) are available free of charge posted at the following website: http://www.ciplist.com

ARTICLE 2.12 CONTRACT DOCUMENTS: The Contract Documents shall consist of the Notice Inviting Bids, the Instructions to Bidders, the Proposal, the Bid Sheet(s), the Bid Security Form for Check or Bond, List of Subcontractors, the Faithful Performance Bond, the Payment Bond, the Agreement, Non-Collusion Affidavit, the Special Provisions, the Drawings, the Standard Specifications for Public Works Construction, 2021 edition and supplements thereto, together with all additions, deletions, modifications, appendices and all addenda as prepared prior to the date of the bid opening setting forth any modifications or interpretations of any said documents are hereby incorporated in and made a part of the Contract Documents.

All Contract Documents are complementary, and what is called for in any one shall be as binding as if called for in all. The intention of the documents is to require a complete and finished piece of work. The Contractor, at his sole cost and expense, shall perform all labor and services and shall furnish all materials, tools, equipment and facilities necessary for the proper execution of the work, with the exception of such items as may be definitely stipulated in the Specifications or on the Plans to be furnished by the CITY. Anything shown on the Plans and not in the Specifications, or in the Specifications and not in the Plans, shall be performed by the Contractor as though shown on both the Plans and Specifications.

Documents which shall be signed and returned to the CITY with Bid Proposal are:

> Proposal, Bidder's Information, Exhibit A Bid Schedule, Acknowledgement of Addenda Received, References, DBE Bidder's List, Violations of Federal, State, or Local Laws, Disqualification or Debarment, Bidder's Bond, List of Subcontractors, and Non-Collusion Affidavit(s) (Principal and Subcontractor)

Documents which are to be signed and returned to the City by the winning bidder are:

> Agreement, Faithful Performance Bond, Payment Bond, Liability Insurance, Workers Compensation Insurance, and Certificate of Compliance.

Subdivision 2.12.1 Precedence Of Contract Documents: If there is a conflict between Contract Documents, the order of precedence shall be as follows:

1. Contract
2. Specifications
3. Plans

Within the Specifications, the order of precedence is as follows:

1. Change Orders
2. Addenda
3. Permits from other agencies/Supplemental Agreements
4. Special Provisions
5. Instructions to Bidders
6. Notice Inviting Bids
7. Referenced Standard Drawings
8. Referenced Standard Specifications

With reference to Plans, the order of precedence is as follows:

1. Change Order drawings govern over Addenda and Contract drawings.
2. Addenda drawings govern over contract drawings.
3. Contract drawings govern over shop drawings and Standard drawings.
4. Detail drawings govern over general drawings.
5. Figures govern over scaled dimensions.

ARTICLE 2.13 AUTHORITY OF THE ENGINEER: The Engineer shall have the authority to direct as may be necessary to ensure that the work is in strict compliance with the Contract Documents; determine the quantity, quality and soundness of the work; determine if material and equipment being used is satisfactory; interpret the requirements of the contract; and, make decisions regarding the progress and execution of the work. However, neither the Engineer nor any representative of the Engineer shall have the authority to authorize extra work without prior approval by the CITY COUNCIL. Should any discrepancy appear or any misunderstanding arise as to the importance of anything contained in the specifications or drawings, the matter shall be referred to the Engineer, who shall decide the same in accordance with the true intent and meaning as construed by him. Any difference or conflicts which may arise between the Contractor and any other contractor also under the contract administration of the Engineer shall be arbitrated by the Engineer.

ARTICLE 2.14 ACCESS TO WORK: The Engineer, his agents and duly authorized representatives of the CITY shall at all times and for any purpose, have access to the work and the premises used by the Contractor and the Contractor shall provide safe and proper facilities therefor.

ARTICLE 2.15 LEGAL ADDRESS OF THE CONTRACTOR: The address given in the Proposal is hereby designated as the place to which all notices, letters and other communications to the Contractor shall be mailed or delivered. The mailing or delivering to the above-named place of any notice, letter or other communication to the Contractor, shall be deemed sufficient service thereof upon the Contractor. The date of said service shall be the date of such mailing or delivery.

Such address may be changed at any time by a written notice signed by the Contractor and delivered to the Engineer.

ARTICLE 2.16 CONTRACTOR'S RESPONSIBILITIES: The Contractor shall be responsible for the safe, efficient and adequate use of equipment during the progress of the work so as to secure the safety of the workers and others. The Contractor is also responsible for the quality of work required and the stipulated rate of progress. It shall be the Contractor's responsibility to perform the work strictly in accordance with the Specifications and Plans or in accordance with modifications as may be made by the Engineer in the form of addendum or written change orders. The presence of the Public Works Inspector does not relieve the Contractor of his obligation to comply with the requirements of the Plans, Specifications and Contract Documents.

The Contractor shall assume the defense of and indemnify and save harmless the CITY and its officers and agents from all claims of any kind arising from his own negligence or that of his agents in the performance of the Contract.

The Contractor shall be responsible for the custody of any material furnished him for the care of all work until its completion and final acceptance. He shall, at this own expense, replace damaged or lost material and repair damaged parts of the work, regardless of cause, or the same may be done at the Contractor's expense by the CITY.

During the progress of the work the Contractor shall keep the worksite in a neat and clean condition and free from any unsightly accumulation of rubbish. If stockpiling is necessary, the material shall be removed or disposed of weekly. He shall remove from the vicinity of the completed work all plant, building, rubbish, unused materials, concrete forms and equipment belonging to him or used under his direction during construction. In the event of his failure to do so, the same may be removed by the CITY at the Contractor's expense.

All operations of the Contractor shall be conducted in such a manner as to avoid unnecessary dust. To this end, the Contractor shall provide equipment, materials, water, and labor to keep all parts of the work adequately sprinkled and dust free as determined by the Engineer.

Full compensation for dust control measures and conforming with the provisions of this Section shall be included in the prices paid for the various contract items of work listed in the Bid Schedule, and no additional compensation will be allowed therefor.

SECTION 3. SCOPE OF WORK

ARTICLE 3.01 WORK TO BE DONE: The Contractor shall for the price bid furnish all the necessary labor, materials, equipment, methods, processes, implements, tools, and machinery except as otherwise specified to perform the required work in a thorough and workmanlike manner in accordance with the plans and specifications, and to the satisfaction of the Engineer.

The work to be performed shall include but not be limited to **Mobilization, Construction Survey, Preparation and Implementation of Best Management Practices, Traffic Control, Unclassified Excavation, Asphalt Concrete Base Course, ARHM Pavement, Curb Gutter,**

Sidewalk, Wheelchair Ramps, Driveways, Signing, Striping and Markings, Adjustment of Manholes; Minor Drainage Facilities, Water Valve Adjustment, Traffic Loops, Caltrans Encroachment Permit and all other work as identified on the construction plans and specifications.

ARTICLE 3.02 FINAL CLEAN UP: Before acceptance of the work and final payment therefor, the Contractor shall clean the work and all ground occupied by him in connection with the work, of all rubbish, excess materials, equipment and forms. All parts of the work shall be left in a neat and presentable condition.

ARTICLE 3.03 REPAIRS AND REPLACEMENTS: All damage done to existing facilities and improvements by the Contractor shall be repaired by him to the satisfaction of the Engineer. Where sidewalks, curbs or gutters are to be repaired, the repairs shall be made by removing and replacing the entire section back to the nearest scoring lines and not by refinishing the damaged portion. This shall include replacement due to graffiti or other damage by the public for work within the project area.

SECTION 4. CONTROL OF THE WORK

ARTICLE 4.01 COORDINATION OF PLANS, SPECIFICATIONS AND SPECIAL PROVISIONS: These specifications, drawings, special provisions and all supplementary documents are essential parts of the contract. A requirement occurring in one is as binding as though occurring in all. The drawings and specifications are intended to be cooperative and to describe and provide for the workmanlike completion of proposed improvements. Refer to Subdivision 3-7 for procedure of Contract Documents.

ARTICLE 4.02 SPECIFICATIONS AND DRAWINGS: The Contractor shall keep at the work site a copy of the Specifications and Plans at all times and provide the Engineer access thereto.

The Contractor shall check all dimensions and quantities on the drawings or schedules herein contained or given to him by the Engineer, and shall notify the Engineer of errors therein which may be discovered by examining and checking the drawing. He shall not take advantage of any error or omission in these specifications, drawings or schedules, but should such error or omission be discovered, the Contractor shall notify the Engineer and the Contractor shall carry out the Engineer's instructions, as if originally specified.

ARTICLE 4.03 SUPERVISION BY THE CONTRACTOR: The Contractor shall give his personal superintendence to the work, using all his skills and attention in directing the performance of the work or he shall provide a competent, full-time superintendent or foreman with the authority to act on his behalf and whom shall be present to direct the work on the project at all times during its progress. All directions given to the Contractor's superintendent or other authorized supervisory employee shall be as binding as if delivered to the Contractor personally.

ARTICLE 4.04 LABOR: Any overseer, superintendent, laborer or other person employed by the Contractor who shall perform his work in a manner contrary to the specifications shall be discharged immediately and such person shall not again be employed on the project.

ARTICLE 4.05 LINES AND GRADES: The Contractor will set all lines and grades in accordance with the plans and all work done shall conform thereto. The Contractor shall dig all stake holes necessary to give lines and grades. The Contractor shall preserve all stakes set for lines, grades or measurements of the work in their proper places until authorized to remove them by the Engineer. Any expense incurred in replacing stakes which the Contractor or his subordinates may have failed to preserve shall be borne by the Contractor. Unless otherwise noted, the grade between two grade points shall be a straight line between such two points.

ARTICLE 4.06 INSPECTION: The Contractor shall notify the Engineer at least forty-eight (48) hours in advance of starting or resuming work so that the Engineer can arrange for an assistant engineer or inspector to be present. Failure to give such notice shall be cause for rejection of such work. The Contractor shall furnish the engineers and inspectors reasonable facilities for obtaining such information as may be necessary to give them full information at all times respecting the progress and manner of doing the work and the character of the materials.

Subdivision 4.06.1 Special Inspection Fees: If the Contractor elects to work under this contract more than 8 hours per day and 40 hours per week; or Saturday, Sunday, overtime, or City Holidays, the Contractor shall arrange with the Engineer for the required inspection service and pay the special inspections fees which will be charged at the following rates:

Monday through Friday	$105.00 / hour
Saturday, Sunday, overtime and Holidays	$140.00 / hour

ARTICLE 4.07 DEFECTIVE WORK OR MATERIALS: Inspection of the work shall not relieve the Contractor of his obligation to fulfill his duty as herein prescribed. Defective work shall be made good by the Contractor. Unsuitable work and materials may be rejected notwithstanding that such work and materials were previously inspected by the Engineer and accepted or estimated for payment. If the work, or any part thereof, is determined to be defective at any time before final acceptance of the work, the Contractor shall forthwith make good such defect without additional compensation in a manner satisfactory to the Engineer and shall be charged as provided in the preceding section for excess materials furnished by the CITY.

If materials furnished and brought upon the job site by the Contractor for use in the work, or selected for the same by him shall be condemned by the Engineer as unsuitable or not in conformity with the Specifications, the Contractor shall forthwith discard such materials and remove them to a satisfactory distance from the vicinity of the work.

If the Contractor fails or neglects to make ordered repairs to defective work, or to remove rejected materials from the work site within ten (10) days after notification by the Engineer, the Engineer acting on behalf of the CITY may make the ordered repairs or remove the condemned materials and deduct the cost thereof from monies due to the Contractor.

ARTICLE 4.08 EQUIPMENT AND PLANT: Equipment not suitable to produce the quality of work required will not be permitted to operate on the project.

Plants, tools and equipment shall be designed and constructed in accordance with general practice for such equipment and shall be of sufficient capacity and of such character to insure the production of sufficient material to take the work to completion within the scheduled time frame. The Contractor shall provide adequate and suitable equipment and plants to meet the above requirements and when ordered by the Engineer shall remove unsuitable equipment from the worksite and discontinue receiving materials from unsatisfactory plants.

ARTICLE 4.09 ADDITIONS OR OMISSIONS OF WORK, LABOR OR MATERIALS:

Subdivision 4.09.1: Additions: The Contractor shall make additional excavations, furnish and place additional imported borrow, plant-mixed surfacing, concrete or do other additional work or furnish other additional materials where the necessity for or the extent of such work or materials does not appear and cannot with reasonable diligence, cost and certainty, be determined in advance or will only be disclosed by the doing of the work or in any contingency which reasonable care and consideration could not be foreseen. Such additional work or materials shall be specified in writing by the Engineer, subject to approval of the CITY COUNCIL of the CITY of La Habra, and shall be paid for at the unit prices set for in the contract.

Subdivision 4.09.2: Omissions: The Contractor shall omit any portion of the work, labor or materials required to be done or furnished under the plans and the specifications when the necessity for the omission of said work, labor or materials does not appear and cannot with reasonable certainty, diligence and cost be ascertained in advance or will only be disclosed by the doing of the work or in any contingency which reasonable care and consideration could be foreseen; which said omission of work, labor or materials shall be specified and required in writing by the Engineer, subject to the approval of the CITY COUNCIL of the CITY of La Habra, and shall be deducted from the contract price at the unit prices therefore set forth in said contract. Where the contract price is a lump sum, then the cost of the amount deducted shall be proportion of said lump sum such as the quantity of work, labor or materials omitted bears to the quantity upon which said lump sum is based.

Subdivision 4.09.3: Mark-Ups For Extra Work: The Contractor shall use the specified mark ups for all approved extra work:

For General Contractor's work, 15% mark-up for materials and equipment; and 20% mark-up for labor.

For Subcontracted work, 10% mark-up for the first $5,000; and 5% mark-up for costs in excess of $5,000.

Subdivision 4.09.4: Tool and Equipment Rental: The rates to be used in determining equipment rental costs shall be as listed in the Caltrans "Labor Surcharge and Equipment Rental Rates" publication in effect at the time of bid.

ARTICLE 4.10 FINAL INSPECTION: The Engineer will not make the final inspection until the work provided and contemplated by the contract has been completed and the final clean-up performed.

ARTICLE 4.11 CONTRACTOR REPORTING REQUIREMENTS: The following items shall be required as a part of Contractor payment requests. Incomplete submittal or omission of any of the following requirements shall be cause for rejection and return of payment requests to the Contractor for correction. All items shall be complete and current to the satisfaction of the Engineer. The Contractor shall provide all information for his own firm as well as each and every subcontractor. Payment requests shall include at least the following items:

- a breakdown of each pay item showing locations and quantities of work requested for payment
- certification that the as-built records are current and documented in writing
- submission of DBE information including DBE amounts completed to date, DBE providers, Monthly DBE Trucking Utilization Report, and certification that the Contractor is meeting DBE contractual requirements (for projects with DBE requirements)
- Certified Payroll Reports
- updated work schedule
- all change order requests complete to date, including all Force Account cost supporting documentation
- copies of all SWPPP and other Best Management Practices reports, and certification that BMP's are current and implemented
- certification of all federal requirement postings (for federal-aid projects)
- copies of test results (if testing is required of Contractor)
- survey records, maps, cut sheets, calculations, and other data
- Subcontractor Change Requests and subcontractor data
- other forms or reports as may be required by contract

ARTICLE 4.12 PENALTIES: Notwithstanding penalty provisions elsewhere in these specifications, the City may impose financial penalties in the case of the Contractor not fulfilling his contractual obligations. These obligations include, but are not limited to, performing work within the time limits of the contract; public notification; implementation of Best Management Practices, SWPPP, and other management plans; maintaining records; notification of the Engineer; traffic control; safety; controlling the work area; maintaining a competent supervisor on site at all times while performing work; surveying; testing; updating of schedules; and other such contractual obligations. The Contractor shall be responsible for all obligations and penalties applied to subcontractors as if he himself were performing the work.

The amount of penalty shall be equal to the daily liquidated damages, prorated for each 15 minute period, or portion of 15 minutes, of contract violation. Each violation shall be additive if multiple violations occur during the same time period.

ARTICLE 4.13 CLEANUP, TRAFFIC CONTROL, SAFETY: The Contractor shall maintain complete liability and responsibility for implementing project site cleanliness, traffic control, and safety at all times. If, in the opinion of the Engineer or his designated representative, there is a condition warranting corrective action by the Contractor, the Contractor will be advised and requested to correct the condition to the satisfaction of the Engineer. This requirement in no way absolves the Contractor of any obligation or duty to provide for the safety of persons and property

at all times, nor does it impose any obligation or duty on the Engineer to provide any such services or advisement.

The Contractor shall only close travel lanes between 9:00 a.m. and 3:30 p.m. unless otherwise approved by the City Engineer.

The Contractor shall complete the Caltrans District 12 Lane/Shoulder Closure Request Form, email and submit by noon on Monday prior to the week of the planned restrictions to Caltrans per Caltrans Encroachment Permit No. 1222-NSN-0324.

The Contractor's supervisor will not leave the project site until he has personally inspected and verified that all cleanliness, traffic control, and safety conditions are in a suitable condition, and has informed the Engineer that he has performed such an inspection. Likewise, no work may commence at the beginning of the work day until all cleanliness, traffic control, and safety measures and procedures have been reviewed, discussed, and implemented by the supervisor with all of the Contractor's and subcontractor's forces.

In the event that the Contractor does not immediately respond to the Engineer's request for corrective action, and the situation presents a hazard to persons and/or property, the Engineer may cause the work to be corrected by others. Likewise, in the event that the Contractor is not on site, cannot immediately respond, or is otherwise unavailable, the Engineer may cause the work to be corrected by others. If corrective work is performed by others, then the Contractor may be charged for all of the costs, including overhead and indirect costs, required to correct the work. Inspector's costs shall be per Article 4.06 INSPECTION. Engineer's costs shall be 1.5 times the noted Inspector's rate. In addition, the Engineer may impose additional penalties as provided for elsewhere in these specifications.

Full compensation for conforming to the requirements in this article shall be considered as included in the contract lump sum (LS) price bid for TRAFFIC CONTROL, CONSTRUCTION PHASING, PUBLIC CONVENIENCE AND SAFETY, and furnishing all labor, materials, tools, equipment and incidentals for doing all work involved. No additional compensation shall be allowed therefore.

ARTICLE 4.14 REMOVAL OF PERSONNEL: The Engineer reserves the right to direct the Contractor to remove any specified personnel from the project at any time without reason. If directed, the Contractor shall immediately remove such personnel from the project site, and replace such with another competent person. This requirement shall apply to subcontractor personnel as if they were the Contractor's personnel. Violation shall be subject to penalties as noted elsewhere in these specifications.

SECTION 5. CONTROL OF MATERIAL

ARTICLE 5.01 DRAWINGS AND INFORMATION REQUIRED OF CONTRACTOR: The Contractor shall before proceeding with the fabrication or erection of structures or appurtenances if called for under the contract and required in its erection thereof, furnish the Engineer with the information regarding same and shall submit to the Engineer for approval drawings, specifications,

lists and graphs as required under these specifications. Said drawings, specifications, lists and graphs shall become the property of the CITY. In the event that the Engineer shall find that the drawings, specifications, lists and graphs as submitted by the Contractor, are in accordance with acceptable practice and meet the requirements of these specifications, the Engineer will return one (1) set of drawings and lists with his approval within ten (10) days after their receipt at the Engineer's office; otherwise, said drawings will be returned to the Contractor within the said ten (10) day period with a statement of the points wherein they have been found unsatisfactory, in which case, the Contractor at his own expense, shall proceed at once to revise said drawings and lists until they shall be found satisfactory by the Engineer and are approved by him. No fabrication shall be done prior to approval of drawings and lists. The Contractor shall have no claim for damages or extension of time on account of any delay due to revision of drawings as found necessary by the Engineer in order to fulfill the requirements of these specifications; but, regardless of such delays, the Contractor shall be liable to the CITY as provided in the specifications for any failure to complete the work as required by the terms of the contract. Revisions shown on shop drawings shall be considered as changes necessary to meet the requirements of specifications and shall not be taken as the basis of claims for extra work.

The approval of all drawings by the Engineer shall apply to general design only and shall in no way relieve the Contractor from responsibility for errors or omissions contained therein; nor shall said approval operate to waive or modify any provisions or requirement contained in these specifications.

ARTICLE 5.02 SAMPLES AND TESTS: All tests of materials furnished by the Contractor shall be made by a laboratory authorized by the Engineer to make the tests and work involved in the contract. The expense of such tests shall be included in the prices bid for the work.

Tests shall be made in accordance with commonly recognized standards of national organizations and such special methods and tests as are described in the Standard Specifications.

No material shall be used until it has been approved by the Engineer. Samples will be secured and tested whenever necessary to determine the quality of materials.

Whenever reference is made in these specifications to standard tests or requirements of the American Society for Testing Materials, the reference shall be construed to mean the standards that are in effect at the date of these specifications.

ARTICLE 5.03 STORAGE OF MATERIALS: Materials shall be so stored as to insure the preservation of their quality and fitness for the work. When considered necessary by the Engineer, they shall be placed on wooden platforms or other hard, clean surfaces and not on the ground. They shall be placed under cover when so directed. Stored materials shall be so located as to facilitate prompt inspection.

ARTICLE 5.04 SUBSTITUTION OF EQUIVALENTS: On the demand of the City, the Bidder shall, at his own expense, furnish information or data concerning the article, equipment, material, or process offered by him as an equivalent to that specified; and, if the CITY shall so require, the Bidder, at his own expense, shall have the article, equipment, materials or process tested to its

quality, strength, physical, chemical or other characteristics, its durability, finish, efficiency or service by a reputable testing engineer or laboratory satisfactory to the CITY.

In accordance with California Public Contract Code §3400(a), and as specified herein this Section, the Contractor shall submit its list of proposed substitutions for "an equal" ("or equal") item within 20 days after award of the contract. If an offered substitution by the Contractor for the trade names specified in the plans and specs necessitates changes to, or coordination with, other items of the Work, the information submitted shall include details showing such changes. The Contractor shall perform these changes as part of the substitution of material or equipment and at no additional cost to the CITY. The lack of action on the Engineer's side by taking no exceptions to the proposed substitution shall not relieve the Contractor from responsibility for the efficiency, sufficiency, quality, and performance of the substitute material or equipment, in the same manner and degree as the material and equipment specified by name.

Whenever materials or equipment are indicated in the Contract Documents by using the name of a proprietary item or the name of a particular Supplier, the naming of the item is intended to establish the type, function, and quality required. Unless stated otherwise, materials or equipment of other Suppliers may be accepted if sufficient information is submitted to the Engineer for review to determine whether the material or equipment proposed is equivalent or equal to that named.

Request for approvals of "or equal" items prior to Bid Opening will not be considered. Bidders are responsible to ensure their Bid includes the price required for the item as specified, and assumes all risk in including a price for an "or equal" item that is not approved by the Engineer, and any additional cost associated with furnishing and installing the item as specified in the specifications or plans.

The Contractor may bring forward a substitution proposal for an "or equal" item provided the request and supporting documentation is submitted within 20 days of contract award. The following information shall be included with any substitution request:

Whether or not acceptance of the substitute for use in the Work will require a change in any of the Contract Documents to adopt the design to the proposed substitute.

Whether or not incorporation or use of the substitute in connection with the Work is subject to payment of any license fee or royalty.

All variations of the proposed substitute from the items originally specified will be identified.

Certification that the proposed substitute will perform adequately the functions and achieve the results called for by the general design, and be similar and of equal substance to that indicated, and be suited to the same use as that specified.

There is no guaranteed time frame for the Engineer's review of the substitution requests.

The Contractor is responsible to demonstrate that the type, function, and quality of any such substitute product, material or equipment is equivalent to the specified item. The Engineer shall

require at the Contractor's expense additional data about the proposed substitution he deems necessary.

If the Engineer takes no exceptions to the proposed substitution, it will not relieve the Contractor from responsibility for the efficiency, sufficiency, quality, and performance of the substitute material or equipment, in the same manner and degree as the material and equipment specified by name.

The lack of any action by the Engineer does not constitute acceptance of the substitution; all approved "or equal" substitutions must be approved in writing by the Engineer.

Acceptance by the Engineer of a substitute item does not relieve the Contractor of the responsibility for full compliance with the Contract Documents.

The Bid submittal must be based on the material and equipment specified by name per the Special Provisions and/or the Project plans. If the proposal is rejected by the Engineer, you will not be entitled to either an extension in Contract Time, and/or an increase in the Contract Price.

As applicable, no Shop Drawing or Working Drawing submittals will be made for a substitute item nor will any substitute item be ordered, installed, or utilized without the Engineer's prior written approval.

Whether approved or disapproved, the Contractor must reimburse the CITY for the charges of the Engineer for evaluating each proposed substitution.

SECTION 6. LEGAL RELATIONS AND RESPONSIBILITIES

ARTICLE 6.01 LAWS TO BE OBSERVED:

Subdivision 6.01.1 Laws and Regulations: The Contractor shall keep himself fully informed of all Federal and State laws, County and CITY ordinances and regulations which, in any manner, affect those engaged or employed on the work, the materials used in the work or the conduct of the work. If any discrepancy or inconsistency should be discovered in this contract or in the Plans or Specifications herein referred to, in relation to any such law, ordinance or regulation, the Contractor shall forthwith report the same in writing to the Engineer. The Contractor shall, at all times, observe and comply with and shall cause all his agents and employees to observe and comply with all such applicable laws, ordinances and regulations in effect or which may become effective before completion of this contract. He shall protect and indemnify the CITY and its officers and agents against any claim or liability arising from or based on the violations of any such laws, ordinances or regulations whether by himself or by his employees or his subcontractors or their employees.

Except as otherwise explicitly provided in these specifications, all permits and licenses necessary to the prosecution of the work shall be secured by the Contractor at his own expense and he shall pay all taxes properly assessed against his equipment or property used or required in connection with the work.

All state laws, all county and CITY ordinances and regulations now imposed by competent authority and relating to any materials required to be furnished under these specifications and work required to be done hereunder, shall be deemed to be and hereby are made controlling and part of these specifications.

Subdivision 6.01.2 General: The Contractor shall keep himself fully informed of all existing state and national laws and municipal ordinances and regulations which in any manner affect those engaged or employed in the work, or the materials used in the work or which in any way affect the conduct of the work and of all such orders and decrees of bodies or tribunals having any jurisdiction or authority over the same.

Subdivision 6.01.3 Eight-Hour Law: Eight (8) hours labor constitutes a legal day's work. The Contractor shall forfeit as a penalty $25.00 (Twenty-five dollars) for each workman employed in the execution of the contract by the Contractor or any subcontractor under him for each calendar day during which such workman is required or permitted to work more than eight (8) hours in any one calendar day and forty (40) hours in any one calendar week in violation of the provisions of the Labor Code and in particular, Section 1810 to Section 1815 thereof inclusive except that work performed by employees of Contractors in excess of eight (8) hours per day and forty (40) hours during any one week, shall be compensated at not less than one and one-half (1 ½) times the basic rate of pay as provided in Section 1815.

Subdivision 6.01.4 Prevailing Rate of Per Diem Wages: Pursuant to the provisions of Section 1773 of the Labor Code of the State of California, the Director of Industrial Relations has ascertained the general prevailing rate of wages and employer payments for health and welfare, vacation, pension and similar purposes applicable to the work to be done.

The Contractor shall comply with Labor Code Section 1775. In accordance with said section, the Contractor shall forfeit as a penalty to the City $50.00 (fifty dollars) for each calendar day, or portion thereof, for each workman paid less than the stipulated prevailing rates for such work or craft in which such workman is employed for any work done under the contract by him or by any subcontractor under him in violation of the provisions of the Labor Code and in particular Labor Code Sections 1770 to 1780, inclusive. In addition to said penalty and pursuant to said Section 1775, the difference between such stipulated prevailing wage rates and the amount paid to each workman for each calendar day or portion thereof for which each workman was paid less than the stipulated prevailing wage rate shall be paid to each workman by the Contractor.

Subdivision 6.01.5 Certified Payroll: Pursuant to Section 1776 of the Labor Code, the Contractor and/or subcontractors shall submit weekly to the City for each week in which any contract work is performed a certified copy of all payroll records. Should the Contractor fail to provide such payroll certificates, the CITY may withhold $1,000.00 for each weekly payroll certificate not received from payment due.

ARTICLE 6.02 PERMITS AND LICENSES: The Contractor shall procure all permits and licenses, pay all charges and fees, and give all notice necessary and incident to the due and lawful

prosecution of the work. No fee is charged for an Encroachment Permit issued by the CITY for a Public Works Project. The Contractor shall obtain a CITY of La Habra Business License.

The Contractor shall conform to the requirements of the California Department of Transportation Standard Encroachment Permit No. 1222-NSN-0324 (a copy of the permit is provided in Appendix "C" of these Specifications).

Full compensation for conforming to the requirements in this article shall be included in the contract Lump Sum price bid for MOBILIZATION AND DEMOBILIZATION (5% MAX OF TOTAL BID PRICE) and no additional compensation will be allowed therefore.

ARTICLE 6.03 PATENTS: The Contractor shall assume all costs arising from use of patented materials, equipment, devices or processes used on or incorporated in the work and agrees to indemnify and save harmless the CITY of La Habra, the CITY COUNCIL, the City Engineer and their fully authorized representatives from all suits of law or actions of every nature for, or on account of, the use of any patented materials, equipment, devices or processes.

ARTICLE 6.04 PRESERVATION OF PROPERTY: The Contractor shall conduct the operations in a careful and prudent manner to avoid damage to adjacent property.

The Contractor shall preserve and protect all on-site and roadside trees from injury. All trees useful for shade or other purposes shall be cared for by the Contractor and no trees within the limits of project site shall be cut or removed unless indicated on the plans.

All fences along the line of the improvement shall be protected by the Contractor; if they are injured or destroyed they shall be restored to a condition as good as when he entered upon the work. It is required that the Contractor replace in kind or reimburse the owners thereof for all fences, shrubs, buildings and other improvements damaged or removed by the construction operations not shown on the plans.

The Contractor shall preserve and protect from injury all buildings, pole lines, pipe lines and all direction, warning and mileage signs and any other structures which have been placed within the limits of the project site.

Full compensation for the requirements in this article, as above specified and conforming with the provisions of this Section shall be included in the prices paid for the various contract items of work listed in the Exhibit A Bid Schedule, and no additional compensation will be allowed therefor.

ARTICLE 6.05 PRESERVATION OF MONUMENTS: The Contractor shall not disturb any monuments, stakes or sign posts found on the line of the improvement until authorized by the Engineer. The Contractor shall bear the expense of resetting any monument, stakes or signposts which may be disturbed without authorization from the Engineer. After construction and prior to final acceptance, the Contractor's land surveyor or qualified Civil Engineer shall re-survey all field monuments and centerline ties within the construction zone, prepare tie sheets and Corner Record sheets, and file them with the City Engineer for review. After review by the City Engineer, the land surveyor shall file the Corner Records with the Orange County Land Surveyors Office as

required by law, and file certified copies of the Corner Records with the City Engineer. Project retention will not be released until all records are recorded with the County Land Surveyor Office.

Full compensation for conforming to the requirements in this article shall be included in the contract Lump Sum price bid for CONSTRUCTION SURVEY AND MONUMENT PERPETUATION and no additional compensation will be allowed thereof.

ARTICLE 6.06 RESPONSIBILITY FOR DAMAGE: During the progress of the work, the CITY of La Habra will not be answerable or accountable, in any manner, for any loss or damage that may happen to the work or any part thereof; or for injury to any person or persons, either workmen or the public, or for damage to adjoining property from any cause which might have been prevented by the Contractor or his workmen or any one employed by him, against all of which injuries or damages to persons and property the Contractor having control over such work must properly guard. The Contractor shall be responsible for any damage to any person or property resulting from defects or obstructions or from any causes whatsoever during the progress of the work, or at any time before its completion and final acceptance and shall indemnify and save harmless the CITY of La Habra and/or its officers and/or its employees from all suits or actions of every name and description brought for or on account of any injuries or damages received or sustained by any person or persons by or from the Contractor, his servants or agents in the construction of the work or by or in consequence of any negligence in guarding the same in improper materials used in its construction or by or on account of any act or omission of the Contractor or his agents.

ARTICLE 6.07 COOPERATION BETWEEN CONTRACTORS: Where two or more contractors are employed on related or adjacent work, each shall conduct his operations in such a manner as not to cause any unnecessary delay or hindrance to the other. Each contractor shall be responsible to the other for all damage to work, person or property or for loss caused by failure to finish the work within the time specified for completion.

ARTICLE 6.08 CONTRACTOR'S RESPONSIBILITY FOR WORK: Except as provided above, until the formal acceptance of the work by the City Council, the Contractor shall have the charge and care thereof and shall bear the risk of injury or damage to any part thereof by the action of the elements or from any other cause whether arising from the execution or from the nonexecution of the work. The Contractor shall rebuild, repair, restore and make good all injuries or damages to any portion of the work occasioned by any of the above causes before its completion and acceptance and shall bear the expense thereof except for such injuries or damages as occasioned by acts of the Federal Government and the public enemy. In case of suspension of work from any cause whatever, the Contractor shall be responsible for all materials and shall properly store them, if necessary, and shall provide suitable drainage of the project site and erect temporary structures where necessary.

ARTICLE 6.09 NO PERSONAL LIABILITY: Before the contract is executed on behalf of the CITY, a bidder to whom the contract has been awarded shall furnish to the City a policy or certificate of protective liability insurance in which the CITY shall be named as an additional insured with the bidder. The policy shall insure the CITY, his officers, and his employees; the bidder, his employees and his subcontractors and their employees, their heirs, agents and employees; while acting within the scope of their duties against all claims arising out of or in

connection with the work to be performed and shall remain in full force and effect until the work is accepted by the CITY. The policy shall provide for the following limits:

Minimum Scope of Insurance:

A. Workers Compensation & Employers Liability Insurance
   - Workers Compensation insurance with statutory limits as required by the Labor Code of the State of California.
   - Employers Liability with limits of $1,000,000 per Accident; $1,000,000 Disease per employee; $1,000,000 Disease per policy.
   - The policy shall include a written waiver of the insurer's right to subrogate against CITY.
   - Required Evidence Of Coverage:
     i. Subrogation waiver endorsement; and
     ii. Properly completed Certificate of Insurance.

B. General Liability Insurance
   - Minimum Limits: $2,000,000 per Occurrence; $4,000,000 General Aggregate; $4,000,000 Products/Completed Operations Aggregate. The General Aggregate shall apply separately to each project. The required limits may be provided by a combination of General Liability Insurance and Commercial Excess or Umbrella Liability Insurance. If contractor maintains higher limits than the specified minimum limits, CITY requires and shall be entitled to coverage for the higher limits maintained by contractor.

C. Automobile Liability Insurance
   - Minimum Limit: $2,000,000 combined single limit per accident.
   - Coverage shall apply to all owned, hired and non-owned vehicles.
   - CITY shall qualify as an insured.
   - Required Evidence of Coverage:
     i. Copy of the endorsement or policy language indicating that CITY is an insured; and
     ii. Properly completed Certificate of Insurance.

All insurance issued in compliance with this section shall be insured in the form and by the insurer or insurers satisfactory to and first approved by the CITY in writing. The Contractor shall not allow any subcontractor to commence work on his subcontract until the subcontractor has secured all required bonds and insurance.

ARTICLE 6.10 WORKER'S COMPENSATION INSURANCE: The Contractor shall procure and maintain Worker's Compensation Insurance as required by applicable state or territorial law for all of his employees to be engaged in work at the site of the project under this Contract. In case of any such work sublet, the Contractor shall require the subcontractor similarly to provide Worker's Compensation Insurance for all of the latter's employees to be engaged in such work unless such employees are covered by the protection afforded by the Contractor's Worker's Compensation Insurance. In case any class of employees engaged in hazardous work on the project

under this Contract is not protected under the Worker's Compensation Statute, the Contractor shall provide and shall cause each subcontractor to provide adequate employer's liability insurance for the protection of such of his employees as are not otherwise protected.

The Contractor and/or subcontractor shall file a copy of their Certificate of Compensation Insurance with the CITY of La Habra and no work shall begin until such certificate is filed with the CITY. In the event of cancellation, the insurance company shall give the CITY of La Habra ten (10) days written notice.

ARTICLE 6.11 SUBCONTRACTING: Attention is directed to the provisions in Section 2-3, "Subcontracts", of the Standard Specifications and these Special Provisions.

In accordance with the requirements of Sections 4100 to 4133 inclusive of the Public Contract Code, each bidder shall list in his Proposal the name and business address of each subcontractor to whom the bidder proposes to subcontract all or a portion of work and shall list each subcontractor licensed by the State of California proposed by the bidder to specially fabricate and install all or a portion of the work. Said list shall include a description of the portion of the work which will be done by each subcontractor.

A sheet for listing the subcontractors as required is included in the proposal. The successful responsible bidder shall submit a letter to the CITY of La Habra requesting approval of all subcontractors. Included in the letter shall be a list of the names and addresses of each Contractor, items to be subcontracted by item number, brief description of the item, and contract bid value. If only a portion of the item is to be subcontracted, that portion and dollar value of work, based on contract item bid value, shall be indicated.

No subcontractor shall be permitted to perform any work under the contract without having first been approved, in writing, by the CITY of La Habra.

ARTICLE 6.12 STORM WATER POLLUTION BEST MANAGEMENT PRACTICES: The Contractor shall comply with subsections 3-12.6 of the Standard Specifications for Public Works Construction. The Contractor shall not permit polluted water to enter a catch basin or drainage channel. Water pollution control work shall consist of constructing those facilities which may be shown on the Plans, specified elsewhere in these Special Provisions, required by the Standard Specifications, required by National Pollutant Discharge Elimination System (NPDES No. CAS000002) California General Permit for Storm Water Discharges Associated with Construction and Land Disturbance Activities Order No. 2009-0009-DWQ, or ordered by the Engineer. Said work is intended to provide prevention, control and abatement of water pollution to streams, waterways and other bodies of water.

In order to provide effective and continuous control of water pollution, it may be necessary for the Contractor to perform the contract work in small or multiple units on an out-of-phase schedule and with modified construction procedures. The Contractor shall provide temporary pollution control measures including, but not limited to, dikes, basins, ditches and the application of straw and seed which become necessary as a result of his operations. The Contractor shall coordinate water pollution control work with all other work done on the contract.

Before starting any work on the project, the Contractor shall submit to the Engineer for acceptance a program for effective control of water pollution. Such program shall show the schedule for the erosion control work included in the contract and for all water pollution control measures which the Contractor proposes to take in connection with construction of the project to minimize the effect of his operations upon adjacent streams and other bodies of water. The Contractor shall not perform any clearing and grubbing or earthwork on the project, other than that specifically authorized in writing by the Engineer, until such program has been accepted. The Contractor shall revise and bring up to date said water pollution control program at any time the Engineer makes written request for such revision.

The Engineer will notify the Contractor of the acceptance or rejection of any submitted or revised water pollution control program in not more than five (5) days.

The City shall not be liable to the Contractor for failure to accept all or any portion of an originally submitted or revised water pollution control program, nor for any delays to the work due to the Contractor's failure to submit an acceptable water pollution control program.

The Contractor may request the Engineer to waive the requirement for submission of a written program for control of water pollution when the nature of the Contractor's operation is such that erosion is not likely to occur. Waiver of this requirement will not relieve the Contractor from responsibility for compliance with the other provisions of this section. Waiver of the requirement for a written program for control of water pollution will not preclude submittal of a written program at a later time if the Engineer deems it necessary because of the effect of the Contractor's operations.

Where erosion control damage will cause water pollution which is probably due to the nature of the material or the season of the year, the Contractor's operations shall be so scheduled that permanent erosion control features will be installed concurrently with or immediately following grading operations.

Compliance with the requirements of this Section shall in no way relieve the Contractor from his responsibility to comply with the other provisions of the Contract, in particular, his responsibility for damage and for preservation of property.

All water pollution control work performed in accordance with the accepted program which is not otherwise required under the contract and which is ordered by the Engineer will be paid for as follows:

(1) Such water pollution control work which may be accomplished under the various contract items of work will be measured and paid for as provided for in these Special Provisions for the said items of work.

(2) Such water pollution control work not covered by contract items will be paid for as extra work as provided for in Section 3-3 "Extra Work" of the Standard Specifications.

Except as otherwise provided in this Section 3-12.6, or in the Standard Specifications or elsewhere in these Special Provisions, full compensation for conforming to the requirements in this section shall be included in the contract lump sum price bid for STORM WATER POLLUTION PREVENTION PLAN (SWPPP) & IMPLEMENTATION OF BMPs and no additional compensation will be allowed therefore.

ARTICLE 6.13 TRESPASS: The Contractor shall be responsible for all damage or injury which may be caused on any property by trespass of the Contractor's employees in the course of their employment whether the said trespass was committed with or without the consent or knowledge of the Contractor.

ARTICLE 6.14 SAFETY, SANITARY AND MEDICAL REQUIREMENTS: The Contractor, his employees, his subcontractors and their employees shall promptly and fully carry out the existing safety, sanitary and medical requirements as may from time to time be prescribed by the Industrial Safety Commission and by County or State Health Departments to the end that proper work shall be done and the safety and health of the employees and of the community may be conserved and safeguarded. In case any such regulations and orders are not observed by the Contractor, they may be enforced by the Engineer at the Contractor's expense.

ARTICLE 6.15 WATER AND POWER: Unless otherwise provided in the Special Provisions, the Contractor shall provide, at his own expense, all necessary water and power required for his operations under the contract.

ARTICLE 6.16 PROTECTION OF UNDERGROUND FACILITIES: Attention is directed to the possible existence of underground facilities not known to the CITY or in a location different from that which is indicated on the plans or in these Special Provisions. The Contractor shall take steps to ascertain the exact location of all underground facilities prior to doing work that may damage such facilities or interfere with their service. If the Contractor discovers underground facilities not indicated on the Plans or in these Special Provisions, he shall immediately give the Engineer written notification of the existence of such facilities. Such facilities shall be protected from damage as directed by the Engineer and the Contractor will be paid for such work as extra work as provided in Section 3-3 of the Standard Specifications.

ARTICLE 6.17 AIR POLLUTION CONTROL: Section 7-8.2, "Air Pollution", of the Standard Specifications is supplemented by the following:

The Contractor shall comply with all air pollution control rules, regulations, ordinances and statutes which apply to any work performed pursuant to the contract including any air pollution control rules, regulations, ordinances and statutes specified in Section 11017 of the Government Code.
In the absence of any applicable air pollution control rules, regulations, ordinances or statutes governing solvents, all solvents, including but not limited to the solvent portions of paints, thinners, curing compounds, and liquid asphalt used on the project shall comply with the applicable material requirements of the County Air Pollution Control District. All containers of paint, thinner,

curing compound or liquid asphalt shall be labeled to indicate that the contents fully comply with said requirements.

ARTICLE 6.18 PROJECT APPEARANCE: The Contractor shall maintain a neat appearance to the work. In any area visible to the public, the following shall apply:

When practicable, broken concrete and debris developed shall be disposed of concurrently with its removal. If stockpiling is necessary the material shall be removed or disposed of on the next working day, except that stockpiles shall not be left in the public right of way on weekends or holidays.

Full compensation for the requirements in this article, as above specified and conforming with the provisions of this Section shall be included in the prices paid for the various contract items of work listed in the Exhibit A Bid Schedule, and no additional compensation will be allowed therefor.

ARTICLE 6.19 FAIR EMPLOYMENT PRACTICE COMMISSION CERTIFICATION: The Contractor's attention is directed to the requirements in Section 12990 of the Government Code for nondiscrimination and compliance employment programs.

ARTICLE 6.20 SOUND CONTROL REQUIREMENTS: The Contractor shall comply with all local sound control and noise level rules, regulations and ordinances which apply to any work performed pursuant to the Contract.

Each internal combustion engine used for any purpose on the job or related to the job shall be equipped with a muffler of a type recommended by the manufacturer. No internal combustion engine shall be operated on the project without said muffler.

The noise level from the Contractor's operations between the hours of 8 a.m. and 5:00 p.m. shall not exceed 86 DBA at a distance of 50 feet. This requirement in no way relieves the Contractor from responsibility for complying with local ordinances regulating noise level.

Said noise level requirement shall apply to all equipment on the job or related to the job including, but not limited to, trucks, transit mixers or transient equipment that may or may not be owned by the Contractor. The use of loud sound signals shall be avoided in favor of light warnings except those required by safety laws for the protection of personnel.

Full compensation for the requirements in this article, as above specified and conforming with the provisions of this Section shall be included in the prices paid for the various contract items of work listed in the Exhibit A Bid Schedule, and no additional compensation will be allowed therefor.

ARTICLE 6.21 LEGAL RELATIONS AND RESPONSIBILITY: The Contractor's attention is directed to the provisions of Section 5, "Responsibilities of Contractor", of the Standard Specifications and these Special Provisions for the requirements and conditions which he must observe in the execution of the work.

SECTION 7. PROSECUTION AND PROGRESS

ARTICLE 7.01 PROSECUTION AND PROGRESS: The Contractor's attention is directed to Section 6, "Prosecution, Progress and Acceptance of Work", of the Standard Specifications.

ARTICLE 7.02 TIME LIMIT: The work specified herein and shown on the Plans shall be completed within **eighty (80)** working days from the date specified in the Notice to Proceed. Attention is directed to Section 6-3 and 6-9 of the Standard Specifications, "Time of Completion and Liquidated Damages". The Contractor shall pay to the City the sum of **$1,000** per calendar day for each and every calendar days delay beyond the time prescribed for finishing the work.

SECTION 8. PAYMENTS

Within ten (10) days after the date of acceptance of the work the Engineer will cause to be filed on behalf of the City in the Office of the County Recorder a Notice of Completion of the work herein agreed to be done by the Contractor.

Upon expiration of forty-five (45) days after the filing of such Notice of Completion of the work, the City will pay to the Contractor the amount remaining after deduction from the amount of value stated in the above-mentioned estimate all prior payments to the contract and all amounts to be kept and retained under the provisions of the Contract.

If the Contractor disagrees with the Engineer's final estimate and within said period of forty-five (45) days files a written statement of his claims, the Engineer will issue as a semi-final estimate the proposed estimate submitted to the Contractor and the CITY will within thirty (30) days pay the sum found due thereon after deducting from the amount of value stated in the first mentioned estimate all prior payments to the Contractor and all amounts to be kept and retained under the provisions of the contract. The Engineer will then consider and investigate the Contractor's claim and will make such revision in the said estimate as he may find to be due and will then certify in writing to the City Clerk the whole amount and value of the work done by the Contractor under and according to the terms of the contract. The CITY will pay the amount so found due after deducting all previous payments, amounts to be retained under the contract, and amounts which may be retained in accordance with the applicable specifications.

ARTICLE 8.01 PARTIAL PAYMENTS: At the request of the Contractor, partial payments will be made on a monthly basis. The Progress Pay requests shall be submitted on or before the 20th day of each month. The estimate may include only work completed up to and including this date.

Progress pay requests showing work not accomplished by the 20th day of the month shall be rejected.

ARTICLE 8.02 PAY RETENTION: From each progress estimate **five (5) percent** will be deducted and retained in accordance with Section 7-3.2 of the Standard Specifications.

ARTICLE 8.03 FINAL ESTIMATE AND PAYMENT: Whenever in the opinion of the Engineer the Contractor shall have completely performed the contract on his part the Contractor shall submit

to the Engineer a written statement to the final quantities of contract items for inclusion in the final estimate.

All prior estimates upon which partial payments have been made shall be subject to correction in the final estimate. The final estimate and payments made thereunder shall be final and conclusive upon the Contractor.

ARTICLE 8.04 TAXES: No mention shall be made of sales tax or use tax, as all bid prices submitted shall be considered as including such tax.

SECTION 9. WORK SCHEDULES

ARTICLE 9.01 WORK SCHEDULE: Before the commencement of work, the Contractor shall submit a work schedule prepared using the latest version of Microsoft Project or approved equal to the Engineer for approval. The work schedule shall be submitted at least five (5) days prior to commencement of work and shall be kept current through the progress of the work. The work shall be performed in order of their priorities and as directed by the Engineer. Full compensation for conforming to the requirements of this section shall be considered as included in mobilization costs and non-portable, and no additional compensation will be allowed thereof.

SECTION 10. CITY REQUIREMENTS

ARTICLE 10.01 FAIR EMPLOYMENT PRACTICES: In connection with the performance of work under this Contract, the Contractor agrees as follows:

1. The Contractor will not willfully discriminate against any employee or applicant for employment because of race, sex, color, religion, age, handicap status, or national origin. The Contractor will take affirmative action to ensure that the applicants are employed, and that employees are treated during employment, without regard to their race, sex, color, religion, age, handicap status, or national origin. Such action shall include, but not be limited to, the following: employment upgrading, demotion or transfer; recruitment or recruitment advertising; layoff or termination; rates of pay or other forms of compensation; and selection for training, including apprenticeship. The Contractor agrees to post in conspicuous places, available to employees and applicants for employment, notices to be provided by awarding authority setting forth the provisions of this fair Employment Practices section.

2. The Contractor will send to each labor union or representative of workers with which he has collective bargaining agreement or other contract or understanding, a notice advising the said labor union workers' representative of the Contractor's commitments under this section and shall post copies of the notice in conspicuous places available to employees and applications for employment.

3. The Contractor will permit access to his records of employment, employment advertisements, application forms, and other pertinent data and records the Fair Employment Practices Commission, the CITY of La Habra or any other appropriate

agency designated by the CITY for the purposes of investigation to ascertain compliance with the Fair Employment Practices section of this Contract.

4. The finding of willful violation of the Fair Employment practices section of this Contract or of the Fair Employment Practices Act shall be regarded by the CITY of La Habra as a basis for determining the Contractor to be not a "responsible bidder" as to future contracts for which such Contractor may submit bids.

   The CITY of La Habra shall deem a finding of willful violation of the Fair Employment Practices Act to have occurred upon receipt of written notice from the Fair Employment Practices Commission that it has investigated and determined that the Contractor has violated the Fair Employment Practices Act and has issued an order under Government Code Section 12970 or obtained an injunction under the Government Code Section 12973.

   Upon receipt of such written notice from the Fair Employment Practices Commission, the CITY of La Habra shall notify the Contractor that unless he demonstrates to the satisfaction of the awarding authority within a stated period that the violation has been corrected, his prequalification rating will be revoked at the expiration of such period.

5. The Contractor agrees, that should the CITY of La Habra determine that the Contractor has not complied with the Fair Employment Practices section of this Contract, then pursuant to Labor Code Section 1735 and 1755, the Contractor shall, as a penalty to the Agency, forfeit for each calendar day, or portions thereof, for each person who was denied employment as a result of such non-compliance, the penalties provided in the Labor Code for violation of prevailing wage rates. Such monies may be recovered from the Contractor. The Agency may deduct any such damages from any monies due to the Contractor from the Contract.

6. a. Nothing contained in this Fair Employment Practices section shall be construed in any manner or fashion so as to prevent the CITY from pursuing any other remedies that may be available by law.

   b. Nothing contained in this Fair Employment Practices section shall be construed in any manner or fashion so as to require or permit the hiring of an employee not permitted by the National Labor Relations Act.

7. Prior to award of the Contract, the Contractor shall certify to the awarding authority that he has or will meet the following standards for affirmative compliance which shall be evaluated in each case by the CITY of La Habra.

   a. The Contractor shall provide evidence, as required by the CITY of La Habra, that he has notified all supervisors, foremen and other personnel officers in writing of the content of the anti-discrimination clause and their responsibilities under it.

   b. The Contractor shall provide evidence, as required by the CITY of La Habra, that he has notified all sources of employee referrals (including unions, employment agencies, advertisements, Department of Employment) of the content of the anti-discrimination clause.

c. Personally, or through his representatives, the Contractor shall, through negotiations with the unions with whom he has agreements, attempt to develop an agreement which will:

(1) Spell out responsibilities for non-discrimination in hiring, referral, upgrading and training.

(2) Otherwise implement an affirmative anti-discrimination program in terms of the union's specific areas of skill and geography, to the end that qualified minority workers will be available and given an equal opportunity for employment.

d. The Contractor shall notify the CITY of opposition to the anti-discrimination clause by individuals, firms or organizations during the period of its prequalification.

8. The Contractor will include the provisions of the foregoing paragraphs 1 through 7 in every first tier subcontract, so that such provisions will be binding upon each such subcontractor.

9. The Contractor, in executing the proposal, thereby certifies that he has or will meet the standards for affirmative compliance with the Fair Employment Practices requirements contained herein.

10. The Contractor shall comply with the procedures and conditions set forth in Section XII of the CITY of La Habra Affirmative Action Plan as adopted by Resolution 2404 of the CITY of La Habra January 21, 1975, a portion of which reads as follows:

"It shall be the policy of the CITY of La Habra to require all contractors and vendors doing business with the CITY in an amount in excess of $50,000.00 and/or 200 employees to certify their compliance with Title VII of the civil Rights Act and the Equal Employment Opportunity Act of 1972. Said certification shall be stipulated by the CITY to safeguard against discrimination by contractors or vendors on the basis of race, color, creed, sex, age, or nationality concerning the practices of recruitment, promotion, demotion, transfer, layoff, or termination. A violation of this non-discrimination certification will be considered a material provision violation and shall be grounds for termination or suspension, in whole or in part, of the contract by the CITY".

SECTION 11. CONSTRUCTION DETAILS

ARTICLE 11.01 GENERAL

Subdivision 11.01.1 Description of Work: The work to be performed shall include but not be limited to **Mobilization, Construction Survey, Preparation and Implementation of Best Management Practices, Traffic Control, Unclassified Excavation, Asphalt Concrete Base Course, ARHM Pavement, Curb Gutter, Sidewalk, Wheelchair Ramps, Driveways, Signing, Striping and Markings, Adjustment of Manholes; Minor Drainage Facilities, Water Valve**

Adjustment, Traffic Loops, Caltrans Encroachment Permit and all other work as identified on the construction plans and specifications.

Subdivision 11.01.2 Order of Work: Order of work shall conform to the provisions of Section 6-1, "Construction Schedule and Commencement of Work," of the Standard Specifications and these Special Provisions.

Work shall be phased and constructed so that at the end of each work day, excavated trenches will be covered by steel plates or paved flush to grade, opened to traffic, and parking restored.

Subdivision 11.01.3 Public Convenience and Access: The Contractor shall conduct his operations so as to cause minimum obstruction and inconvenience to the public. All traffic control devices (delineators, signs, etc.) must be picked up at the end of the workday and stored off-site at an approved location. Traffic control devices may not be left overnight in the medians, at the curb, on sidewalks, etc. All graffiti on construction traffic control devices (delineators, signs, etc.) must be removed daily, or the signs be replaced. Refer to Article 12.02 for additional information.

Subdivision 11.01.4 Public Notice: The Contractor shall notify businesses and residents affected by the construction in writing not less than 48 hours in advance of commencement of demolition, construction, or storage of materials in the street. The notice shall include but not be limited to:

1. The Time and Date of Commencement.
2. Date of Completion.

A copy of the letter shall be submitted to the City Engineer for approval prior to distribution.

Subdivision 11.01.5 Hours of Work: All work shall be performed between 7:30 A.M. and 4:00 P.M., Mondays through Fridays except holidays. No work shall be performed outside normal working hours without advanced authorization from the Engineer. For any inspection outside of regular working hours, the Contractor shall pay all costs for the inspector's time. Request for overtime inspection shall be made in writing to the Engineer.

The Contractor shall only close travel lanes between 9:00 a.m. and 3:30 p.m. unless approved by the City Engineer.

Full compensation for the requirements in this article, as above specified and conforming with the provisions of this Section shall be included in the prices paid for the various contract items of work listed in the Exhibit A Bid Schedule, and no additional compensation will be allowed therefor.

ARTICLE 11.02 FURNISH AND APPLY WATER:

Should the Contractor require water for construction operations, such as for compaction and dust control, he may use water from any fire hydrant adjacent to the job site upon application of a "No Fee" permit from the CITY of La Habra, Engineering Department. The Contractor shall apply water for dust control as necessary and as directed by the Engineer.

Prior to using water, the Contractor shall install a water meter, a valve and an approved back-flow prevention device on the fire hydrant at his expense. The Contractor shall notify the Los Angeles County Fire Department and the Public Works Department 24 hours in advance, stating the location of the hydrant and the hours when it will be used. The Contractor shall operate the fire hydrant with a hydrant wrench only. Should damage occur to the hydrant, the Contractor shall make repairs at his expense and/or further use of City Water may be prohibited. The meter will be used for monitoring water use only. The Contractor will not be charged for water used on the project.

Full compensation for the requirements in this article and conforming with the provisions of this Section shall be included in the prices paid for the various contract items of work listed in the Exhibit A Bid Schedule, and no additional compensation will be allowed thereof.

ARTICLE 11.03 APPURTENANT WORK: All items in the proposal form are considered as complete in place including all incidental and appurtenant work and materials necessary for the satisfactory completion of the same.

Full compensation for the requirements in this article, as above specified and conforming with the provisions of this Section shall be included in the prices paid for the various contract items of work listed in the Exhibit A Bid Schedule, and no additional compensation will be allowed therefor.

ARTICLE 11.05 SOLID WASTE COLLECTION: If collection of solid waste shall occur during street construction, the Contractor shall assist the solid waste collection contractor in accessing containers for his collection of solid waste.

Full compensation for the requirements in this article, as above specified and conforming with the provisions of this Section shall be included in the prices paid for the various contract items of work listed in the Exhibit A Bid Schedule, and no additional compensation will be allowed therefor.

ARTICLE 11.06 EARTHWORK:

Subdivision 11.06.1 General: Earthwork shall conform to the requirements of Section 300, "Earthwork" of the Standard Specifications and shall include all clearing and grubbing, demolition, sawcut, excavation, grading, removal, disposal, backfilling or any other work necessary to prepare the subgrade for construction of improvements.

Full compensation for the requirements in this article, as above specified and conforming with the provisions of this Section shall be included in the prices paid for the various contract items of work and no additional compensation will be allowed therefor.

ARTICLE 11.07 SITE RESTORATION: The Contractor shall restore the construction site per the Standard Specification requirements. All damage done to existing facilities and improvements by the Contractor shall be repaired by him to the satisfaction of the Engineer. Where sidewalks, curbs or gutters are to be repaired, the repairs shall be made by removing and replacing the entire

section back to the nearest scoring lines and not by refinishing the damaged portion. All paint marks shall be removed at the end of the project by using an approved blasting method.

Full compensation for the requirements in this article, as above specified and conforming with the provisions of this Section shall be included in the prices paid for the various contract items of work listed in the Exhibit A Bid Schedule, and no additional compensation will be allowed therefor.

ARTICLE 11.08 PUBLIC UTILITIES: It is the Contractor's responsibility to notify Underground Service Alert (USA) to locate facilities prior to beginning the work. In addition, the Contractor shall locate service laterals that may be affected by the work and take measures to protect all utilities and service laterals in the streets and parkways.

The Contractor shall determine for himself the exact location of all public and private utilities, facilities or substructures, which are not shown on the plans. In the event any utility, facility or substructure is disturbed or damaged, whether in its original or relocated position, the Contractor shall immediately cause repairs to be made to the satisfaction of the owner at no cost to the CITY.

The Contractor shall notify affected utility companies at least 48 hours prior to construction:

UNDERGROUND SERVICE ALERT		811
AT&T	IVETTE GAROFANO	(714) 618-9146
CALIFORNIA DOMESTIC WATER COMPANY	CHE VENEGAS	(562) 947-3811
CALTRANS DISTRICT 12	DISTRICT ENCROACHMENT PERMIT OFFICE	(657) 328-6246
CHEVRON	DAVE ZERLER	(310) 669-4014
CITY OF LA HABRA SEWER AND WATER DEPARTMENT	BRIAN JONES	(562) 383-4170
CITY OF LA HABRA TRAFFIC AND SIGNALS	MICHAEL PLOTNIK	(562) 383-4162
CLEAR CHANNEL (FORMERLY ELLER MEDIA)	PHIL NGUYEN	(310) 755-7220
CR&R WASTE & RECYCLING SERVICE	JESSE RIVAS	(714) 372-8209
CRIMSON PIPELINE	APRIL HARVEY OR UTILITY COORDINATOR	(562) 285 4195, (562) 285-4100, (866) 351-7473 (EMERGENCY)
FRONTIER COMMUNICATIONS	ARIAL FATALA	(714) 375-6717
KINDER MORGAN	DON QUINN	(714) 560-4400
LA HABRA HEIGHTS WATER COMPANY	MAIN CONTACT	(562) 697-6769
METROPOLITAN WATER DISTRICT	MATT PARRY, SHREH ZAREH, MANNU SINGH	(714) 577-5084, (213) 217-6534, (213) 217-6961
ORANGE COUNTY SANITATION DISTRICT	WILLIAM GILBERT	(714) 593-7844, (714) 478-6465 CELL
PLAINS ALL AMERICAN PIPELINE	JOE MATTEO	(562) 728-2368
SHELL PIPE COMPANY	CLARINDA MALDONADO	(310) 816-2063
SOUTHERN CALIFORNIA EDISON	JIMMY PARKIN	(714) 578-3434
SOUTHERN CALIFORNIA GAS	GABRIEL DAVALOS	(213) 231-7688
SPECTRUM (FORMERLY TIME WARNER & CHARTER)	DOMINIC HERNANDEZ	(714) 287-9385

SUBURBAN WATER SYSTEMS	TOM MEDINA	(562) 755-5015, (562) 944-8219 GENERAL
TORRANCE LOGISTICS COMPANY (FORMERLY EXXONMOBIL)	TERI A SHINDE	(310) 212-1794
WASTE MANAGEMENT (CR&R)	CHRYSTAL DENNING	(714) 372-8209
WESCON C/O VINTAGE PRODUCTION	EMILIO RODRIGUEZ	(562) 665-9255

ARTICLE 11.09 EXCESS EXCAVATED MATERIAL: Excess excavated material shall be removed from the site and disposed of by the Contractor at his own expense. Excavated material including pavement, base, rock and subgrade soils, shall be removed from the job site at the end of the work week. Failure to do so will result in the CITY removing material at the Contractor's expense. Cost shall be calculated at actual cost for labor and equipment plus overhead and benefits plus 125 percent administrative charges.

ARTICLE 11.10 DUST CONTROL: The Contractor shall at all times, including weekends, at his expense, control dust on the project. Should the Contractor fail to maintain adequate dust control, the City will maintain the site, and an amount equal to twice the actual cost shall be assessed to the Contractor.

Full compensation for the requirements in this article, as above specified and conforming with the provisions of this Section shall be included in the prices paid for the various contract items of work listed in the Exhibit A Bid Schedule, and no additional compensation will be allowed therefor.

ARTICLE 11.11 WASTE MANAGEMENT: The Contractor shall comply with the requirements of AB939 and City of La Habra requirements, and submit a Waste Management Plan upon request of the Engineer.

Full compensation for the requirements in this article, as above specified and conforming with the provisions of this Section shall be included in the prices paid for the various contract items of work listed in the Exhibit A Bid Schedule, and no additional compensation will be allowed therefor.

SECTION 12: CONSTRUCTION BID AND PAYMENT ITEMS

ARTICLE 12.01 MOBILIZATION AND DEMOBILIZATION (5% MAX OF TOTAL BID PRICE):

Mobilization and Demobilization shall include all labor, work, and materials necessary to mobilize and demobilize forces, equipment, and materials; obtain bonding, insurance, permits (including Caltrans double permit), financing, licenses; punchlist items; cleanup; restoration of improvements and other work as necessary to prepare for construction of the work. Compensation for Mobilization and Demobilization shall not exceed **Five Percent (5%)** of the total bid amount for BID SCHEDULE.

Full compensation for complying with the work contained in this section for MOBILIZATION AND DEMOBILIZATION (5% MAX OF TOTAL BID PRICE) shall be included in the contract bid price per Lump Sum (LS), and no additional compensation will be allowed therefore. One half of the bid amount shall be paid upon providing an accepted project schedule, obtaining Caltrans double permit, beginning work and completion of at least 10% of the other bid items. One half

shall be paid upon completion of work, punch list items, and complete cleanup and restoration of the project site to the satisfaction of the Engineer.

ARTICLE 12.02 TRAFFIC CONTROL, CONSTRUCTION PHASING, PUBLIC CONVENIENCE AND SAFETY:

The Contractor shall conduct his operations so as to cause minimum obstruction and inconvenience to the public and shall not exceed **Five Percent (5%)** of the total bid amount.

Two (2) Solar/battery powered Changeable Message Signs (CMS) will be placed in advance of the project. The City shall direct the Contractor on the language of the messages. The CMS shall be installed four (4) weeks before the project starts and until completion of the work. The City has the right to direct changes to the messages at any time at no additional cost to the City.

The Contractor will be required to apply for and receive a separate Caltrans Double Permit rider to the City of La Habra Caltrans Encroachment Permit No. 1222-NSN-0324, please see Appendix "C" for traffic control work performed on Whittier Boulevard (Route 39) in Caltrans right-of-way, including but not limited to submittal of traffic control plans site specific with traffic engineer seal and signature. The Contractor will be required to comply with all requirements set forth in the City's Caltrans permit with regards to traffic control, restricted work hours and other requirements set forth in the permit and directed by the Caltrans inspector. The contractor shall pay all fees required by Caltrans to obtain the Double Permit. The contractor shall prepare traffic control plans signed and stamped by a Traffic Engineer (T.E.) or Professional Civil Engineer (P.E.) and submit to Caltrans and the City of La Habra for approval.

The Contractor shall complete the Caltrans District 12 Lane/Shoulder Closure Request Form, email and submit by noon on Monday prior to the week of the planned restrictions to Caltrans per Caltrans Encroachment Permit No. 1222-NSN-0324.

At least ten (10) days prior to commencing work, the Contractor shall submit to the City Engineer his construction schedule for approval. The schedule shall allow residents on any street to park within six hundred (600) feet from their residence. The Contractor shall distribute to each resident or business affected by the construction a written notice at least seventy-two (72) hours prior to commencing construction. The notice shall include the date and working hours of construction. It shall be the Contractor's responsibility to complete the notification letter with the proper dates at the time of notification. If the Contractor fails to meet the schedule indicated in the Notice, the Contractor shall reschedule his work and renotify the residents.

The Contractor shall only close travel lanes on Euclid Street between 9:00 a.m. and 3:30 p.m. unless approved by the City Engineer.

Continuous emergency and local traffic access shall be maintained in the area of work and vehicular access to individual driveways shall be provided and maintained except for short durations of not more than two hours and with prior notice to the adjacent residents involved. No overnight closure of driveways will be allowed except while construction is in progress and concrete is curing. The Contractor shall provide alternate ramps for access while concrete is curing, where feasible.

Driveway replacements 20 feet wide or greater shall be constructed one half at a time to allow for continual access. Other driveways in use, including for curb & gutter replacements only, shall be plated to maintain property access. Adequate delineation and warning shall be provided to guide access over the plates. Ramps and/or detours shall be provided to maintain pedestrian and ADA accessibility. PCC for driveways shall reach a compressive strength of 2500 psi in seven days.

Contractor shall provide temporary AC ramps and walkways where there are differences in grade at removals and/or cold mills. Ramps shall be provided in advance of opening the lane to vehicular travel.

Contractor shall maintain an ADA accessible path of travel through the work area at all times at least equivalent to existing conditions. Excavated areas may be ramped and surfaced with compacted aggregate or other materials to provide a firm unyielding surface.

At least seventy-two (72) hours prior to commencing construction, the Contractor shall notify the traffic signal operator, La Habra Police and Los Angeles County Fire Departments, trash, Post Office, Ambulance Service, La Habra City School District, and Fullerton Joint Union High School District giving the expected starting date, the name and telephone number of a responsible person that is to be contacted, at any hour, in the event of a condition requiring immediate correction.

The Contractor shall maintain access for residents at all times during the construction and at the end of each workday as specified above. The travel lanes shall be graded smooth and shall be maintained in a smooth condition throughout the period of construction including weekends, and at times as directed by the Engineer.

The Contractor shall be responsible for maintaining the location of, and access to, all utility valves during construction operations.

The Contractor shall be responsible for adequate barricading of the work area and controlling of traffic in the vicinity of the project as specified in Section 5-7 and Section 601 of the Standard Specifications or as directed by the Engineer.

All traffic control devices (delineators, signs, etc.) must be picked up at the end of the workday and stored off-site at an approved location, except as needed to delineate changes in grade or other work remaining overnight. Traffic control devices may not be left overnight in the medians, at the curb, on sidewalks, etc. All graffiti on construction traffic control devices (delineators, signs, etc.) must be removed daily, or the signs replaced.

Prior to construction, the Contractor shall submit to the Engineer for approval, any requested changes to the traffic control plans. This plan shall include, but not be limited to, location of all signs and barriers and proposed traffic flow diagrams. The information shall include the minimum requirements of the State of California Manual of Uniform Traffic Control Devices (CAMUTCD), latest edition.

The Contractor shall furnish at his expense and with no extra cost to the CITY such flagmen and guards as are necessary to give adequate warning to the public that roadway work is underway and of any dangerous conditions to be encountered. Flagmen shall perform their duties and be provided with equipment in accordance with current "Instructions to Flagmen" of the State of California, Division of Highways. The equipment shall be furnished, kept clean and in good repair by the Contractor at his own expense. The Contractor shall furnish, erect, maintain and regularly inspect barricades, lights, signs and other devices as are necessary to prevent accidents and avoid damage or injury to the public. These devices shall conform to the requirements set forth in the State of California Manual of Uniform Traffic Control Devices (CAMUTCD), latest edition.

Closures and parking restrictions shall only be made for the amount of time necessary to complete construction activities. Areas that do not have active construction work shall be secured and reopened as directed by the Engineer. Extents of closures and parking restrictions shall be limited to areas as necessary for immediate construction activities.

When necessary to provide vehicular or pedestrian crossings over the fresh pavement, the Engineer shall direct the Contractor to spread sufficient sand or rock dust on the affected area to eliminate tracking or damage to the pavement. Sand or rock dust used for this purpose shall be at the Contractor's expense.

The Contractor's operations shall cause no unnecessary inconvenience. The access rights of the public shall be considered at all times. Unless otherwise authorized, pedestrian, bicycle, and motor vehicle traffic shall be permitted to pass through the Work, or an approved detour shall be provided.

Should the Contractor appear to be neglectful or negligent in furnishing warning and protective measures, the Engineer may direct the Contractor's attention to the existence of such hazards. The Contractor shall provide all necessary warning and protective measures immediately, at his expense. Whether the Engineer points out the inadequacy of warning and protective measures or not, such action, or lack of action, on the part of the Engineer shall not relieve the Contractor from the responsibility for public safety or abrogate his obligation to furnish and pay for safety measures and devices. If attention is directed to the existence of a hazard, and the Contractor fails to provide an appropriate remedy, any expense incurred by the CITY for furnishing or maintaining safety measures and devices may be deducted from the pay estimates and the total contract price for the work.

Safe and adequate pedestrian and vehicular access shall be provided and maintained to: fire hydrants; commercial and industrial establishments; churches, schools, and parking lots; service stations and motels; hospitals; police and fire stations; and establishments of similar nature. Access to these facilities shall be continuous and unobstructed unless otherwise approved by the Engineer.

Safe and adequate pedestrian zones and public transportation stops, as well as pedestrian crossings of the Work at intervals not exceeding 300 feet, shall be maintained unless otherwise approved by the Engineer.

Traffic maintenance shall conform to the provisions in Section 5-7 "Safety" and Section 601 "Temporary Traffic Control for Construction and Maintenance Work Zones, of the Standard Specifications and these Special Provisions.

Vehicular access to residential driveways shall be maintained except when necessary construction precludes such access for reasonable periods of time. If backfill has been completed to the extent that safe access may be provided, and the street is opened to local traffic, the Contractor shall immediately clear the street and driveways and provide and maintain access.

The Contractor shall cooperate with the various parties involved in the delivery of mail and the collection and removal of trash and garbage to maintain existing schedules for these services.

Grading operations, roadway excavation and fill construction shall be conducted by the Contractor in a manner to provide a reasonably satisfactory surface for traffic. When rough grading is completed, the roadbed surface shall be brought to a smooth, even condition satisfactory for traffic.

Unless otherwise authorized, work shall be performed in only one-half the roadway at one time. One half shall be kept open and unobstructed until the opposite side is ready for use. If one-half street only is being improved, the other half shall be conditioned and maintained as a detour.

Full compensation for conforming to the requirements in this article shall be considered as included in the contract lump sum (LS) price bid for TRAFFIC CONTROL, CONSTRUCTION PHASING, PUBLIC CONVENIENCE AND SAFETY, and shall include, but not to be limited to, providing two (2) changeable message boards**,** following Caltrans permit requirements, and furnishing all labor, materials, tools, equipment and incidentals for doing all work involved. No additional compensation shall be allowed therefore.

ARTICLE 12.03 CONSTRUCTION SURVEY AND MONUMENT PERPETUATION: The Contractor shall provide all labor, work and materials necessary to survey the work to conform to plan lines and limits, provide grades for curb, gutter, drainage, establish pavement grades, match to existing conditions, and otherwise lay out the work as necessary for construction. The Contractor shall review and set all reference points, grades and elevations and provide cut sheets to the satisfaction of the Engineer prior to construction operations.

Pavement grades shall be provided as necessary for PCC construction, and to prepare the street for asphalt pavement operations. Grades shall provide for adequate drainage, match to existing gutters and other improvements, and provide a smooth profile. Nominal pavement grades shall be 2% from the pavement centerline to edge of gutter. In locations where gutter elevations differ on each side of the street, the slope shall be adjusted to provide adequate drainage, but shall not be less than 1% or more than 4%, and shall be approved by the Engineer, or as otherwise shown per plan.

Prior to the start of construction, the Contractor's licensed land surveyor or registered Civil Engineer licensed to practice land surveying in the State of California shall, in conformance with California State Law AB 1414, locate all monuments (whether or not of record), bench marks, and centerline ties within the construction zone, i.e., within one hundred feet of the construction activity. Additional ties to monuments shall be set when ties are missing (min. 4 ties per

monument.) The Contractor's surveyor or qualified Civil Engineer shall prepare and submit for review to the Engineer separate tie sheets and Corner Record sheets (monuments not of record shall have only tie sheets prepared.) Tie sheets and Corner Records shall conform to the County Standards and the County Engineers' Association of California's "Guide to the Preparation of Records of Survey and Corner Records" document as provided by the County of Orange Land Surveyor's Office. Upon review by the Engineer, the Land Surveyor shall file the Corner Records with the County of Orange Land Surveyor's Office. Copies of Certified Corner Records shall be submitted to the Engineer of the City of La Habra.

After construction and prior to final acceptance by the City of the construction project, the Contractor's land surveyor or qualified Civil Engineer shall re-survey all field monuments and centerline ties within the construction zone, prepare tie sheets and Corner Record sheet as indicated above, and submit to the City Engineer for review. After review by the City Engineer the land surveyor shall file the Corner Records with the County Land Surveyors Office and provide certified copies of the Corner Records to the City Engineer.

All survey monuments removed or altered as a result of construction shall be reset, Corner Records filed with the County of Orange Land Surveyor's Office and approved final Corner Records provided to the Engineer. Centerline ties removed as a result of construction shall be reset and tie sheets submitted to the Engineer.

The land surveyor shall provide a letter of certification for all monuments having four or more existing ties which are within 0.02 ft plus or minus of the original City tie sheet records. When several monuments or ties appear on one tie sheet and one of the ties has changed the land surveyor shall re-measure all of the ties and re-file a new tie sheet with the County and City as required herein.

County of Orange permanent and temporary bench marks within the construction zone shall be located by survey, and the Contractor's Land Surveyor shall send a written notification of impending construction to the County of Orange Land Surveyor's Office two weeks prior to construction.

Lines and grades for the construction shall be the responsibility of the Contractor, with the following provisions:

All work under this contract shall be built in accordance with the lines and grades shown on the plans. Field survey for establishing these, and for the control of construction, shall be the responsibility of the Contractor. All such survey work including construction staking shall be done under the supervision of a California Licensed Land Surveyor or authorized Civil Engineer. Staking shall be done on all items ordinarily requiring grade and alignment, at intervals normally accepted by the agencies and trade involved.

The Contractor shall provide a copy of the office calculations and grade sheets to the Engineer. The Contractor shall be responsible for any errors in the finished work, and shall notify the Engineer, in writing, within 24 hours of any discrepancies, or design errors during the construction staking.

Contractor shall provide construction surveying for relocation of any conflicting utilities and provide a reasonable time window of opportunity to the utility owners to relocate their facilities after the survey is provided by the Contractor.

Full compensation for conforming to the requirements in this article shall be included in the contract Lump Sum (LS) price bid for CONSTRUCTION SURVEY & MONUMENT PERPETUATION and shall include, but not to be limited to, construction staking, location and/or relocation of conflicting utilities, locating survey monuments, setting of survey monuments and center line ties, preparing and filing centerline tie sheets and corner Records, locating Bench Marks and notifying the County Surveyor's Office of same, professional office services and field calculation, and furnishing all labor, materials, tools, equipment and incidentals for doing all work involved. No additional compensation shall be allowed therefore.

ARTICLE 12.04 – PREPARE AND IMPLEMENT STORM WATER POLLUTION PREVENTION PLAN (SWPPP) AND IMPLEMENTATION OF BMPs:

On September 2, 2009, the State Water Resources Control Board adopted Order No. 2009-0009-DWQ (Waste Discharge Requirements for Discharges of Storm Water Runoff Associated with Construction Activities and Land Disturbance Activities). Effective July 1, 2010, all discharges (construction sites where calculated soil disturbance totals 1 acre or more) are required to obtain coverage and comply with this Construction General Permit (CGP).

A copy of this permit and related documents/attachments may be found on the internet at:

http://www.swrcb.ca.gov/water_issues/programs/stormwater/constpermits.shtml

The CONTRACTOR is hereby directed to read and understand all the requirements of this Permit as they relate to this project.

Prior to commencing work, the CONTRACTOR shall electronically submit the required PRDs (Permit Registration Documents) to the ENGINEER. If any of the required items are missing, the PRD submittal is considered incomplete and will be rejected. Upon receipt and acceptance of a complete PRD submittal, the ENGINEER will electronically submit these documents through the Stormwater Multi-Application, Reporting and Tracking System (SMARTS) to the State Water Resources Control Board (SWRCB) to obtain coverage under the CGP. The CONTRACTOR is also responsible for payment of initial and annual fees required for coverage under the CGP.

STORM WATER POLLUTION PREVENTION PLAN (SWPPP)

The CONTRACTOR will need to submit a site-specific SWPPP, prepared by a Qualified SWPPP Developer (QSD) as defined by the CGP, which must include the information needed to demonstrate compliance with all the requirements of the CGP, for review, approval, and certification by the City prior to submittal of the PRDs (the SWPPP is a required component of the PRD electronic submittal package).

NO CONSTRUCTION ACTIVITY CAN BE ALLOWED UNTIL THE CITY HAS RECEIVED A WDID NUMBER FROM THE SWRCB (Note: CIP projects in the Santa Ana Region will receive a tracking number, not a WDID number).

The SWPPP shall be developed and updated using Section 2 and Appendix B of the California Stormwater Quality Association (CASQA) Stormwater Best Management Practice Handbook Web Portal for Construction (requires subscription to access). The CASQA Construction BMP Web Portal required a subscription to be purchased from CASQA and can be accessed at the following link:

https://www.casqa.org/resources/bmp-handbooks/construction-bmp#subscribe

The CONTRACTOR must amend the SWPPP as needed during the course of work to reflect actual construction progress and construction practices. The CONTRACTOR shall designate a Qualified SWPPP Practitioner (QSP), as defined by the CGP, who will be responsible for compliance with CGP requirements on the project at all times.

The SWPPP shall not be construed to be a waiver of the CONTRACTOR's obligation to review and understand the CGP before submitting a bid. By submitting a bid, the CONTRACTOR acknowledges that he has read and understands the requirements of the CGP.

REPORTING - The CONTRACTOR shall be responsible for providing all reports required by the CGP (monitoring, inspection, Rain Event Action Plans, annual reports, etc.) to the City for review. Time-sensitive reports involving monitoring data shall be provided as soon as the information is available. All other reports shall be provided to the City a minimum of two weeks prior to their deadline for submittal to the SWRCB through SMARTS.

The CONTRACTOR shall develop a Storm Water Pollution Prevention Plan (SWPPP) as required by the Construction General Permit (CGP). The SWPPP shall be developed, amended, and certified by a Qualified SWPPP Developer. A Qualified SWPPP Developer shall have one of the registrations or certifications listed in Section VII.B.1 of the CGP, and effective September 2, 2011, must have attended a State Water Board-sponsored or approved Qualified SWPPP Developer training Course and passed the exam.

The CONTRACTOR shall implement, maintain, and amend the SWPPP as needed during the course of work to reflect actual construction progress and construction practices. The CONTRACTOR shall designate a Qualified SWPPP Practitioner (QSP), as defined by the CGP, who will be responsible for compliance with CGP requirements for the PROJECT at all times.

The CONTRACTOR shall be responsible for and shall submit to the ENGINEER copies of all CONTRACTOR generated SWPPP documents, including all sampling test results, inspection reports, Rain Event Action Plans (REAP), annual reports, and other time sensitive documents involving monitoring data. Such documentation shall be provided as soon as the information is made available and shall be provided within twenty-four (24) hours when requested by the ENGINEER. The CONTRACTOR shall be required to produce such data and documentation at

the PROJECT site on demand if so requested by the Santa Ana Regional Water Quality Control Board Staff during a site inspection.

Full compensation for conforming to the requirements herein shall include, but not be limited to, the following:

1. Submit Permit Registration Documents (PRDs) per Attachment B of the CONSTRUCTION GENERAL PERMIT (CGP) to the ENGINEER.
2. Develop a SWPPP to conform to the correct Risk Level and the CONTRACTOR's actual construction practices.
3. Administer, implement, maintain, and ensure adequate functioning of the various water quality control measures identified within the SWPPP during construction including all Numeric Action Level (NAL) and Numeric Effluent Limitation (NEL) sampling, monitoring and reporting requirements statutorily required for the determined Risk Level of the PROJECT site. These tasks must be performed by a Qualified SWPPP Practitioner (QSP). Effective on September 2, 2011, a QSP shall meet the requirements listed in the CGP.
4. Pay all annual permit fees.
5. Provide and maintain all documentation (at the jobsite) and administration for the entire CONTRACT period.
6. Perform all work required for compliance with the requirements of the CGP including preparation of all Rain Event Action Plans (REAPs), construction of effective treatment control BMPs, i.e.: contingency basins, chemical treatments, etc.
7. Provide all labor, tools, equipment, and materials for any additional BMPs which may be required to comply with the requirements of the CGP.

Full compensation for complying with the work contained in this section shall be included in the contract price bid per LUMP SUM (LS) for PREPARE AND IMPLEMENT STORM WATER POLLUTION PREVENTION PLAN (SWPPP) & IMPLEMENTATION OF BMPs, and no additional compensation will be allowed thereof.

ARTICLE 12.05 - CLEARING & GRUBBING; LANDSCAPE PRUNING; ROOT REMOVAL; GRADING AND SITE RESTORATION; MISC MAILBOX AND SIGN ADJUSTMENTS

The contract bid item for Clearing & Grubbing; Landscape Pruning; Root Removal; Grading and Site Restoration; Misc Mailbox and Sign Adjustments shall include all labor, work and materials necessary to remove and dispose of interfering vegetation, debris, and all other materials not covered elsewhere; prune landscaping including shrub and trees clear of the work area; remove and dispose of interfering roots; provide site grading and restoration to match to existing and finished work; and provide for miscellaneous mailbox and sign relocations and adjustments as needed to avoid new curb and pavement construction. Signs and mailboxes shall be set back 6" from face of curb while maintaining ADA accessibility.

Full compensation for constructing the work contained in this section shall be included in the contract price bid per LUMP SUM (LS) for CLEARING & GRUBBING; LANDSCAPE PRUNING; ROOT REMOVAL; GRADING AND SITE RESTORATION; MISC MAILBOX

AND SIGN ADJUSTMENTS, and shall include all labor, tools, material and appurtenances necessary to complete the work and no additional compensation will be allowed thereof.

ARTICLE 12.06 - REMOVE EXISTING AND CONSTRUCT 6" PCC COMMERCIAL DRIVEWAY OVER 6" CMB PER STD PLAN 110-2 TYPE A, INCLUDING PCC CURB AND GUTTER

The Contractor shall saw cut and remove existing PCC driveway, sidewalk, curbs, gutters, base, subgrade, and other in-place materials as necessary for construction; prepare the subgrade, place base; and construct PCC driveway per Std Plan 110-2 Type A. New driveway shall match existing driveway finish and pattern as directed. Bid Item shall include excavation, PCC driveway, curb, gutter and base, within the limits of the driveway. Temporary AC slot patch shall be considered as incidental and not included in the area measurement for payment. Replacement or adjustment of any existing curb drain openings will be included in this bid item.

Driveway replacements 20' wide or greater shall be constructed one half at a time to allow for continual access. Other driveways in use, including for curb & gutter replacements only, shall be plated to maintain property access. Adequate delineation and warning shall be provided to guide access over the plates. Ramps and/or detours shall be provided to maintain pedestrian and ADA accessibility. PCC for driveways shall reach a compressive strength of 2500 psi in seven days.

Full compensation for constructing the work contained in this section shall be included in the contract price bid per SQUARE FOOT (SF) for REMOVE EXISTING AND CONSTRUCT 6" PCC COMMERCIAL DRIVEWAY OVER 6" CMB PER STD PLAN 110-2 TYPE A, INCLUDING PCC CURB AND GUTTER, and shall include but not be limited to saw-cut, excavation, removal and proper disposal of removed material and shall include all labor, tools, material and appurtenances to construct the work and no additional compensation will be allowed therefore.

ARTICLE 12.07 - REMOVE EXISTING AND CONSTRUCT 4" PCC RESIDENTIAL DRIVEWAY PER STD PLAN 110-2 TYPE A, INCLUDING PCC CURB AND GUTTER:

The Contractor shall saw cut and remove existing PCC driveway, sidewalk, curbs, gutters, base, subgrade, and other in-place materials as necessary for construction; prepare the subgrade, place 6" base under the curb & gutter; and construct PCC driveway per Std Plan 110-2 Type A. New driveway shall match existing driveway finish and pattern as directed. Bid Item shall include excavation, PCC driveway, curb and gutter within the limits of the driveway, and PCC curb within the limits of the driveway. Temporary AC slot patch shall be considered as incidental and not included in the area measurement for payment. Replacement or adjustment of any existing curb drain openings will be included in this bid item.

Driveway replacements 20' wide or greater shall be constructed one half at a time to allow for continual access. Other driveways in use, including for curb & gutter replacements only, shall be plated to maintain property access. Adequate delineation and warning shall be provided to guide access over the plates. Ramps and/or detours shall be provided to maintain pedestrian and ADA accessibility. PCC for driveways shall reach a compressive strength of 2500 psi in seven days.

Full compensation for constructing the work contained in this section shall be included in the contract price bid per SQUARE FOOT (SF) for REMOVE EXISTING AND CONSTRUCT 4" PCC RESIDENTIAL DRIVEWAY PER STD PLAN 110-2 TYPE A, INCLUDING PCC CURB AND GUTTER, and shall include but not be limited to saw-cut, excavation, removal and proper disposal of removed material and shall include all labor, tools, material and appurtenances to construct the work and no additional compensation will be allowed therefore.

ARTICLE 12.08 - REMOVE EXISTING AND CONSTRUCT 8" PCC CURB AND GUTTER OVER 6" CMB PER STD PLAN 120-3 TYPE A2-8:

The contract bid item for Remove Existing and Construct 8" PCC Curb & Gutter over 6" CMB Per Std Plan 120-3 Type A2-8 shall include all labor, work and materials necessary to remove existing materials and construct the curb & gutter, curb drains, and base complete in place. The Contractor shall sawcut and remove existing PCC curb & gutter, asphalt, asphalt curb, base, subgrade, and other in-place materials as necessary for construction; prepare the subgrade; place base; and construct PCC curb & gutter where noted and as shown per detail drawings. Replacement or adjustment of any existing curb drain openings will be included in this bid item.

Full compensation for constructing the work contained in this section shall be included in the contract price bid per LINEAR FOOT (LF) for REMOVE EXISTING AND CONSTRUCT 8" PCC CURB AND GUTTER OVER 6" CMB PER STD PLAN 120-3 TYPE A2-8, and shall include but not be limited to saw-cut, excavation, removal and proper disposal of removed material and shall include all labor, tools, material and appurtenances necessary to construct the work and no additional compensation will be allowed therefore.

ARTICLE 12.09 REMOVE EXISTING AND CONSTRUCT 8" PCC CURB OVER 6" CMB PER STD PLAN 120-3 TYPE A1-8:

The contract bid item for Remove Existing and Construct 8" PCC Curb over 6" CMB Per STD PLAN 120-3 TYPE A1-8 shall include all labor, work and materials necessary to remove existing materials and construct the curb, curb drains, and base complete in place. The Contractor shall sawcut and remove existing PCC, asphalt, base, subgrade, and other in-place materials as necessary for construction; prepare the subgrade; place base; and construct PCC curb where noted and as shown per detail drawings. Replacement or adjustment of any existing curb drain openings will be included in this bid item.

Full compensation for complying with the work contained in this section shall be included in the contract price bid per LINEAR FOOT (LF) for REMOVE EXISTING AND CONSTRUCT 8" PCC CURB OVER 6" CMB PER STD PLAN 120-3 TYPE A1-8, and no additional compensation will be allowed therefore and shall include but not be limited to saw-cut, excavation, removal and proper disposal of removed material and all labor, tools, material and appurtenances necessary to construct the work and no additional compensation will be allowed therefore.

ARTICLE 12.10 - REMOVE EXISTING AND CONSTRUCT 4" THICK PCC CURB RAMP WITH DETECTABLE WARNING SURFACE INCLUDING CURB & GUTTER PER CALTRANS REVISED STANDARD PLANS A88A (2018), CASE A:

The Contractor shall sawcut and remove existing PCC sidewalk, curb access ramps, curbs, gutters, spandrels, base, subgrade, and other in-place materials as necessary for construction; prepare the

subgrade; place 6” CMB under the curb & gutter; and construct PCC curb access ramps with detectable warning surface per Caltrans Standard Plan A88A where noted and as shown per detail drawings. New sidewalk shall match existing sidewalk finish and pattern as directed. **Bid item** shall include curb ramp with detectable warning surface, retaining curb, curb, curb and gutter. Additionally, all related adjustments of pull boxes, pull box covers, protection or sign replacements within construction limits shall be considered as part of the ramp work and shall be included in this section for payment.

For curb ramps that are joined to a spandrel, the Contractor shall sawcut a neat line 4” from the existing curb face. Adjustment of any existing pipe opening will be included in the price of this bid item. Curb shall be constructed monolithic with ramp.

Integral retaining curbs shall be constructed at the back of curb ramps and sidewalks as necessary to match existing landscape grades or to match existing grades at a wall. Payment for retaining curbs shall be included in this bid item. Retaining curb shall be constructed monolithic with ramp.

Curb access ramps and sidewalks shall meet all ADA requirements and shall not create impediments to access. Curb access ramps features, per standard plan, shall include:

ramps not exceeding 7.5% slope
side ramps not exceeding 9% slope
turning pads of 4’-2” by 4’-2” minimum area and maximum cross slopes of 1.5%
bottom of ramps to be flush to gutters and shall not exceed 5% counter slope
integral retaining curbs as necessary to match to existing landscape grades

Detectable warning surface shall conform to the standard plans and shall be precast tactile tiles by Armor-Tile or approved equal, 3’x4’ minimum, extending the full width of ramp. Edge of detectable warning tile is to be 6” to 8” from the flowline at the bottom of the ramp and parallel to adjacent to the street or tangent to the curb return. The color of the detectable warning surface shall be Dark Gray – Fed 36118, unless otherwise specified.

The Contractor shall submit to the Engineer for review the following items:

A. Product Data: Submit manufacturer's literature describing products, installation procedures and routine maintenance.

B. Samples: Submit two tile samples of the kind proposed for use (minimum size 6" by 8").

C. Materials Test Reports: Submit test reports from qualified independent testing laboratory indicating that materials proposed for use are in compliance with requirements and meet the properties indicated. All test reports shall be conducted on a cast-in-place tactile tile system as certified by a qualified independent testing laboratory.

D. Maintenance Instructions: Submit copies of manufacturer's specified maintenance practices for each type of tactile tile and accessory as required.

The manufacturer shall provide a written five-year warranty for prefabricated detectable warning surfaces, guaranteeing replacement when there is defect in the dome shape, color

fastness, sound-on-cane acoustic quality, resilience, or attachment. The warranty period shall begin upon acceptance of the project.

It shall be the Contractor's responsibility to supervise and utilize the proper experienced personnel to ensure that the correct saw cut limits are established for all access ramp locations and the Engineer shall not be responsible to direct the Contractor's crews or otherwise serve in this management capacity.

Full compensation for complying with the work contained in this section shall be included in the contract price bid per EACH (EA) for REMOVE EXISTING AND CONSTRUCT 4" THICK PCC CURB RAMP WITH DETECTABLE WARNING SURFACE INCLUDING CURB & GUTTER PER CALTRANS REVISED STANDARD PLANS A88A (2018), CASE A AS SHOWN, and shall include but not be limited to saw-cut, excavation, removal and proper disposal of removed material and all labor, tools, material and appurtenances necessary to construct the work and no additional compensation will be allowed thereof. The Contractor shall be responsible to remove and reconstruct access ramps at his own cost if ramps are deemed non-compliant with project plans and specifications.

ARTICLE 12.11 - REMOVE EXISTING AND CONSTRUCT 8" PCC CROSS GUTTER AND/OR SPANDREL OVER 6" CMB PER STD PLAN 122-3:

The Contractor shall saw cut and remove existing PCC cross gutter and other in-place materials as necessary for construction; prepare the subgrade; place base; and construct PCC cross gutter and spandrel or spandrel only. New gutter shall join existing flow lines. Temporary AC slot patch shall be included as needed.

Full compensation for complying with the work contained in this section shall be included in the contract price bid per SQUARE FOOT (SF) for REMOVE EXISTING AND CONSTRUCT 8" PCC CROSS GUTTER AND OR SPANDREL OVER 6" CMB PER STD PLAN 122-3, and shall include but not be limited to saw-cut, excavation, removal and proper disposal of removed material and all labor, tools, material and appurtenances necessary to complete the work and no additional compensation will be allowed therefore.

ARTICLE 12.12 - REMOVE EXISTING AND CONSTRUCT 4" PCC SIDEWALK PER STD PLAN 113-2:

The Contractor shall saw cut and remove existing PCC sidewalk, base, subgrade, and other in-place materials as necessary for construction; prepare the subgrade, and construct PCC sidewalk. New sidewalk shall match existing sidewalk finish and pattern as directed. Bid Item shall include excavation, preparation of subgrade, and PCC sidewalk.

Full compensation for complying with the work contained in this section shall be included in the contract price bid per SQUARE FOOT (SF) for REMOVE EXISTING AND CONSTRUCT 4" PCC SIDEWALK PER STD PLAN 113-2, and shall include but not be limited to saw-cut, excavation, cutting and removal of conflicting tree roots, removal and proper disposal of removed material and all labor, tools, material and appurtenances necessary to complete the work and no additional compensation will be allowed therefore.

ARTICLE 12.13 - REMOVE EXISTING AND CONSTRUCT 48"x 48" CALTRANS TYPE G2 DROP INLET:

The Contractor shall saw cut and remove existing PCC storm drain structure and other in-place materials as necessary for construction; prepare the subgrade, install storm drain structure and backfill to grade and pave to match. New structure shall join to existing and new storm drain pipe. Inlet structure may be cast in place or precast similar to Jensen Precast Drop Inlet 48" x 48" with traffic rated frame and bicycle grate inlet or equal. Bottom of catch basin shall be filled with concrete to the flowline elevation of drain pipes.

Full compensation for complying with the work contained in this section shall be included in the contract price bid per EACH (EA) for REMOVE EXISTING AND CONSTRUCT 48" x 48"CALTRANS TYPE G2 DROP INLET, and shall include but not be limited to saw-cut, excavation, removal and proper disposal of removed material and all labor, tools, material and appurtenances necessary to complete the work and no additional compensation will be allowed therefore.

ARTICLE 12.14 - REMOVE EXISTING AND CONSTRUCT 18" RCP STORM DRAIN PIPE:

The Contractor shall saw cut and remove existing pavement, excavate trenches, remove existing CMP pipe, install pipe bedding, install 18" Reinforced Concrete Pipe, backfill, compact, provide connections, temporary AC pavement and all other in-place materials as necessary for construction. Contractor shall pothole existing utilities to verify pipe elevation and alignment prior to installation. Trench backfill requirements to be per standard detail W-21. Contractor may utilize 1 sack sand cement slurry for backfill material as an alternative. Pipe shall join to new storm drain structures. Pipe shall be connected to existing and new structures by grouting in place.

Full compensation for complying with the work contained in this section shall be included in the contract price bid per LINEAR FOOT (LF) for REMOVE EXISTING AND CONSTRUCT 18" RCP STORM DRAIN PIPE, and shall include but not be limited to saw-cut, excavation, removal and proper disposal of removed material and CMP pipe, installation of RCP pipe, compaction and all labor, tools, material and appurtenances necessary to complete the work and no additional compensation will be allowed therefore.

ARTICLE 12.15 - UNCLASSIFIED EXCAVATION AND DISPOSAL TO A DEPTH OF 9-1/2" BELOW FINISH GRADE:

Contractor shall sawcut, remove interfering asphalt concrete pavement, base aggregate, subgrade, AC berm, and all other materials as necessary to prepare for placement of full depth AC pavement section. Excavation, grading and backfill shall be done in conformance with the applicable portion of Section 300 "Earthwork" of the Standard Specifications and shall include any necessary excavation, and/or fill within the right-of-way, including grading of area to finish subgrade ready for improvements, and subgrade compaction.

In the event that unsuitable or unstable (i.e. "pumping") subgrade is encountered, the Contractor may be directed to remove additional subgrade material to provide for placement of asphalt pavement bridging. Additional excavation shall be made at the unit price provided in this pay item.

In the event that underlying PCC pavement is encountered, the Contractor may elect to include excavation and disposal quantities in this pay item or may proceed under force account "Time and Materials" as approved by the Engineer. If proceeding under force account, the equivalent quantity shall be deducted from this pay item.

In the event that pavement fabric is encountered, the Contractor shall be reimbursed for additional costs to dispose of such material. Contractor shall provide disposal tickets and invoices for reimbursement.

In the event that high-arsenic level soils are encountered, the Contractor shall be reimbursed for additional costs to dispose of such material. Contractor shall provide disposal tickets and invoices for reimbursement.

The Contractor shall comply with Section 300-2.6, "Surplus Material", and shall furnish written consent from the owner of the property where it is intended to dispose of surplus material.

When the exposed subgrade within 1.0 foot of the grading plane has a relative compaction of less than ninety percent (90%), the subgrade shall be scarified and recompacted in accordance with the provisions of the Standard Specifications and the relative compaction shall be not less than ninety percent (90%). All aggregate base material shall be compacted to 95 percent of relative maximum density. Tests for compliance may be made by a representative of the City, at the expense of the City, using Test Method No. California 231. In the event the initial test fails, additional tests shall be made at the Contractor's expense.

Backfill material and placement shall conform to the applicable portions of Section 300 of the Standard Specifications.

Full compensation for complying with the work contained in this section shall be included in the contract price bid per CUBIC YARD (CY) for UNCLASSIFIED EXCAVATION AND DISPOSAL TO A DEPTH OF 9-1/2" BELOW FINISH GRADE, including but not limited to sawcut, removal and disposal of asphalt concrete pavement, base aggregate, and subgrade soils as necessary to prepare for placement of AC pavement, subgrade preparation and compaction, and no additional compensation will be allowed therefore. Measurement shall be per the in-place quantity of material removed. "Truck measure" quantities will not be allowed.

ARTICLES 12.16 - CONSTRUCT 7-1/2" ASPHALT CONCRETE BASE COURSE TYPE B PG 64-10:

This work shall consist of furnishing, spreading and compaction of asphalt concrete pavement base course as shown on the project plans and typical sections. Asphalt Concrete shall be in accordance with Section 203 "Bituminous Materials", Section 302 "Roadway Surfacing" and Section 200 "Rock Materials" of the Standard Specifications.

The Contractor shall install 2 in. x 6 in. Redwood headers in areas where the Asphalt Concrete will not abut existing or new improvements such as driveways, walls, concrete gutters and AC berms.

The Contractor shall develop a paving plan based on the field conditions of the existing subgrade materials encountered on the project site. Saturated, clay, or pumping conditions shall require special planning and attention in coordination with the Engineer. The initial base course for full depth asphalt concrete pavement sections may be placed at up to 0.33 feet thickness or as otherwise approved by the Engineer. Subsequent lifts shall not exceed 0.30 feet in compacted thickness unless otherwise approved.

Asphalt concrete base course shall be Type B conforming to the provisions of subsection 203-6 of the Standard Specifications. The viscosity grade of paving asphalt shall be PG 64-10 per Section 203-1 or as determined by the Engineer.

The provisions in Section 200-1.2. "Crushed Rock and Rock Dust" of the Standard Specifications shall have the following additional requirement:

At least 75 percent, by weight, of the material retained on the No. 4 sieve shall have at least one fractured face as determined by California Test Method No. 205.

Prime Coat shall be ePrime as manufactured by Ergon Asphalt & Emulsions, Inc. or approved equivalent.

Paint binder (tack coat) shall be SS-1h Type asphaltic emulsion conforming to Section 203.3 of the Standard Specifications. Tack coat shall be applied to all vertical and horizontal surfaces prior to placement of AC.

Compacting equipment shall conform to Section 302-5 of the Standard Specifications, except that in very small areas a vibrating tamper, as approved by the Engineer, may be utilized. In general, it is desired that a steel wheeled roller shall always be utilized to finish off each course surface.

The Contractor shall place asphalt concrete pavement base course and wearing course as required by these specifications and drawings. Payment for all full depth asphalt concrete base paving shall be included in this pay item. All full-depth joins shall be neatly sawcut or milled. The asphalt concrete shall be constructed to the lines, grades and designs specified on the plans and as ordered by the Engineer.

Additional full depth asphalt pavement repairs may be constructed at areas with unsuitable (“pumping”) subgrade. Full depth asphalt pavement repair construction and locations shall be as approved by the Engineer and shall be paid under this item. Excavation for full-depth repairs shall be included in the Unclassified Excavation pay item.

Due to the low R value and high moisture content of subgrade soils present at various locations in the City, construction equipment and traffic shall minimize travel on subgrade soils. Contractor shall review the condition of subgrade soils encountered on site and develop a suitable paving plan. In general, the Contractor shall remove existing materials to grade with milling equipment of sufficient size to remove materials in one pass, excavator working from existing pavement surfaces, or a similar method.

Asphalt pavement material for initial paving, and the first lift of asphalt on top of the initial pavement, shall be placed with a paving machine having tracks, or other equipment capable of placing asphalt concrete while minimizing loads on the subgrade soil or base course.

Construction equipment shall minimize repeated heavy traffic loadings, such as dump trucks, traveling on the bare subgrade or repeatedly over the same pavement areas, so as to minimize the possibility of subgrade "pumping". Subgrade and pavement failures caused by repeated heavy load traffic shall be repaired at the expense of the Contractor.

Construction work shall be performed and scheduled so as to avoid the necessity of trash trucks and buses traveling on the AC pavement base course or subgrade soils.

The final lift of pavement shall be placed with conventional spreader equipment. However, the Contractor shall avoid unnecessary and repeated heavy traffic loadings on the same pavement areas.

Payment for CONSTRUCT 7-1/2" ASPHALT CONCRETE BASE COURSE PAVEMENT, TYPE B PG 64-10 shall be at the unit price per TON, and shall include all labor, tools, materials and appurtenances necessary to complete the work and to construct the asphalt pavement complete in place. Weight certification tickets are required for payment.

ARTICLE 12.17 – CONSTRUCT 2" ARHM-GG-C PG 64-16 PAVEMENT

Asphalt Rubber Hot Mix (ARHM) shall be ARHM-GG-C, conforming to the provisions of subsection 203-11 of the Standard Specifications. The viscosity grade of paving asphalt shall be PG 64-16 per Section 203-1 of the Standard Specifications or as determined by the Engineer. The Contractor shall only use the "Wet Process" in the manufacture of rubberized asphalt in accordance with Section 203-11 of the Standard Specifications.

Recycled Asphalt Concrete Hot Mix (RAC) or Reclaimed Asphalt Pavement (RAP) as defined in section 203-6.2.5 of the Standard Specifications shall not be allowed for use in Asphalt Rubber Hot Mix (ARHM).

Composition and Grading shall be per Section 203-11.3 of the Standard Specifications. The Contractor shall submit a copy of the asphalt concrete mix design, a sample of the asphalt concrete, a sample of the aggregate, and a sample of the paving asphalt PG 64-16 to the Engineer or its designated laboratory.

Paint binder (tack coat) shall be SS-1h Type asphaltic emulsion conforming to Section 203-3 of the Standard Specifications.

The surface course shall be spread in one layer with the use of a self-propelled paving machine and shall be spread to the after-compaction thickness as shown on the Plans.

The existing surface to receive the ARHM surface course shall be clean, to the satisfaction of the Engineer and paint binder (tack coat) shall be applied at the rate of 0.10 gallons per square yard

conforming to the provisions of Section 302-5.4 of the Standard Specifications. Similarly, paint binder (tack coat) shall be applied to all vertical surfaces to be joined.

Distribution, spreading and compacting shall conform to the provisions of Section 302-5 of the Standard Specifications and these Special Provisions.

The completed asphalt rubber resurfacing shall be thoroughly compacted to be free from humps, depressions or irregularities. Any ridges, indentations or other objectionable marks left on the surface of the asphalt rubber shall be eliminated by roller or other means.

The longitudinal and transverse joints shall be constructed to have a uniform finished surface throughout. The joints shall be constructed straight, neat, smooth, tight and seamless, irregular joints will not be accepted. Any finished surface with rugged appearance will be rejected.

A certificate of compliance for Asphalt Rubber binder shall be required from the materials supplier.

Tarpaulins shall be used to cover all loads from plant to project.

ARHM surface course shall be thoroughly compacted by rolling. The number of rollers necessary will be established in accordance with Section 302-9.4 of the Standard Specifications. The compacted ARHM surface course shall have a relative compaction of not less than 95 percent in accordance with Section 302-5.6.2 of the Standard Specifications.

Rolling along a joint shall be such that the widest part of the roller is on the hot side of the joint. Join lines between successive runs shall be within 5 inches of lane lines or a minimum of 12 feet outside of the outer most lane line.

Lots consisting of 500 tons will be established for ARHM surface course areas to be tested. The City or its designated laboratory shall perform density testing utilizing a properly calibrated nuclear asphalt-testing device. The City will pay for all initial testing and reasonable amount of retesting utilizing the nuclear asphalt-testing device. If the test results for any lot of ARHM surface course indicate that the relative compaction is below 95 percent, the Contractor will be advised that he is not attaining the required relative compaction and that his materials or his procedures, or both, need adjustment. ARHM-GG spreading operations shall not continue until the Contractor has notified the Engineer of the adjustment that will be made in order to meet the required compaction. Core testing of areas not meeting the 95 percent requirement will be conducted by the City's designated lab.

If the test results for any lot of ARHM surface course continue to indicate that the relative compaction is less than 95 percent after adjustments have been made, the ARHM represented by that lot may be required to be removed and replaced at the Contractor's expense and the Contractor shall suspend all further paving operations until the Contractor can demonstrate to the City that relative compactions of 95 percent can be obtained. It shall be the sole judgment of the City Engineer to determine adequate remedy and/or a reduction in compensation for any lot failing to meet 95 percent relative compaction.

The Contractor shall provide for adequate quality control measures to ensure that delivery of asphalt rubber shall be neither too slow nor too fast to prevent stopping of the paving operation and/or cooling of the asphalt rubber material. Material delivery scheduling and handling is critical to provide optimum compaction opportunity and maximize ride quality performance.

ADD to Section 203-11.6, "Mix Designs and Certifications," the following:
The Contractor shall submit test reports and a Certificate of Compliance for the asphalt rubber and modifier to be used.

Section 12.17.1 ROCK DUST BLOTTER:

Where traffic will have access to rubberized asphalt concrete prior to complete cooling, a rock dust blotter shall be placed as directed by the Engineer to avoid tracking per Section 302-9.7 of the Standard Specifications. Rock dust blotter shall be uniformly applied using a mechanical spreader at a rate of two pounds minimum and four pounds maximum per square yard.

The cost of Rock Dust Blotter shall be included in the unit price bid for "Asphalt Rubber Hot Mix (ARHM)" of these Specifications, and no additional compensation will be made thereof.

Full compensation for complying with the work contained in this section shall be included in the contract to CONSTRUCT 2" ARHM-GG-C PG 64-16 PAVEMENT ~~s~~hall be at the unit price per TON, and shall include all labor, tools, materials and appurtenances necessary to complete the work and to construct the asphalt pavement complete in place. Weight certification tickets are required for payment.

ARTICLE 12.18 – SAWCUT AND REMOVE EXISTING PAVEMENT TO A DEPTH OF 6" BELOW FINISH GRADE. CONSTRUCT 6" PCC PAVEMENT:
The Contractor shall saw cut and remove existing PCC, base, subgrade, and other in-place materials as necessary for construction; prepare the subgrade, and construct PCC pavement to join the back of new driveway and new construction where noted and as shown on Plans. New PCC shall match existing adjacent PCC finish and pattern as directed. Bid Item shall include excavation, PCC pavement, and subgrade recompaction.

Full compensation for complying with the work contained in this section shall be included in the contract price bid per SQUARE FOOT (SF) to SAWCUT AND REMOVE EXISTING PAVEMENT TO A DEPTH OF 6" BELOW FINISH GRADE. CONSTRUCT 6" PCC PAVEMENT, and shall include but not be limited to saw-cut, excavation, removal and proper disposal of removed material and shall include all labor, tools, material and appurtenances

ARTICLE 12.19 – SAWCUT AND REMOVE EXISTING PAVEMENT TO A DEPTH OF 6" BELOW FINISH GRADE. CONSTRUCT 6" AC PAVEMENT:
The Contractor shall saw cut and remove existing AC, base, subgrade, and other in-place materials as necessary for construction; prepare the subgrade, and construct AC pavement to join the back of new driveway where noted and as shown on Plans. Bid Item shall include excavation, removal, AC pavement, and subgrade preparation. AC shall be Type B or C.

Full compensation for complying with the work contained in this section shall be included in the contract price bid per SQUARE FOOT (SF) to SAWCUT AND REMOVE EXISTING PAVEMENT TO A DEPTH OF 6" BELOW FINISH GRADE. CONSTRUCT 6" AC PAVEMENT, and shall include but not be limited to saw-cut, excavation, removal and proper disposal of removed material and shall include all labor, tools, material and appurtenances

~~**ARTICLES 12.20 COLD MILL EXISTING AC PAVEMENT (2" NOMINAL):**~~
~~The Contractor shall cold mill to remove existing AC pavement where shown per plan and prepare the milled surface for paving. Edge shall be straight and suitable for paving.~~

~~Full compensation for complying with the work contained in this section shall be included in the contract price bid per SQUARE FOOT (SF) to COLD MILL EXISTING AC PAVEMENT (2" NOMINAL), and no additional compensation will be allowed thereof.~~

ARTICLE 12.21 CONSTRUCT SPEED LUMP PER PLAN DETAIL:
The Contractor shall install AC speed lumps in conformance with details on the plans. The stripping of said speed lumps shall Thermoplastic, be included in the Bid Item for striping and no additional compensation will be allowed thereof. Contractor shall provide suitable traffic control and warning during construction of speed lumps until they are fully marked.

Full compensation for complying with the work contained in this section shall be included in the contract bid price per EACH (EA) to CONSTRUCT SPEED LUMP PER PLAN DETAIL, and shall include all labor, tools, materials and appurtenances necessary to complete the work and no additional compensation will be allowed thereof.

ARTICLE 12.22 CONSTRUCT AC BERM PER STD PLAN 120-3 TYPE D1-8:
The Contractor shall install AC Berms per Std Plan 120-3 Type D1-8.

Full compensation for complying with the work contained in this section shall be included in the contract bid price per LINEAR FOOT (LF) to CONSTRUCT AC BERM PER STD PLAN 120-3 TYPE D1-8, and shall include all labor, tools, materials and appurtenances necessary to complete the work and no additional compensation will be allowed thereof.

ARTICLE 12.23 EXCAVATE AND ROTATE SEWER MANHOLE ECCENTRIC CONE TO CLEAR CURB AND RECONSTRUCT MANHOLE TO GRADE:
The Contractor shall excavate existing sewer manhole to expose the eccentric cone section. Cone shall be rotated to clear the proposed curb/berm and reconstructed to grade for paving. The final frame and cover shall be adjusted to grade after paving and included in the price for adjusting sewer manhole cover to grade.

Full compensation for complying with the work contained in this section shall be included in the contract price bid per EACH (EA) for EXCAVATE AND ROTATE SEWER MANHOLE ECCENTRIC CONE TO CLEAR CURB AND RECONSTRUCT MANHOLE TO GRADE, and no additional compensation will be allowed thereof.

ARTICLE 12.24 ADJUST WATER VALVE FRAME AND COVER TO GRADE:
The Contractor shall adjust water valve frames and covers to grade. Valves shall be adjusted per City of La Habra Std Plan W-4.

The finished adjustment shall be flush to adjacent surfaces and of sufficient strength to support anticipated traffic. All utility adjustment work and safety requirements shall be coordinated with the appropriate utility agency. The Contractor shall remove all debris from within valve sleeves.

Full compensation for complying with the work contained in this section shall be included in the contract price bid per EACH (EA) to ADJUST WATER VALVE FRAME AND COVER TO GRADE, and no additional compensation will be allowed thereof.

ARTICLE 12.25 ADJUST SURVEY MONUMENT AND MONITORING WELL FRAME AND COVER TO GRADE:
The Contractor shall adjust existing survey monument and monitoring well frames and covers to grade. Adjustments shall be made similar to City of La Habra Std Plan W-4.

The finished adjustment shall be flush to adjacent surfaces and of sufficient strength to support anticipated traffic. The Contractor shall remove all debris from within monument and well sleeves.

Full compensation for complying with the work contained in this section shall be included in the contract price bid per EACH (EA) to ADJUST SURVEY MONUMENT AND MONITORING WELL FRAME AND COVER TO GRADE, and no additional compensation will be allowed thereof.

ARTICLES 12.26 ADJUST SEWER OR STORM DRAIN MANHOLE TO GRADE:
The Contractor shall adjust manhole frames and covers to grade (except for utility covers, boxes, lids, and other utility structures which are adjusted by others or included in other pay items). The work shall include protection, removal or lowering of the utility structure during demolition and preparation for paving, setting the structure to grade, and forming pavement or other constructed work around the structure. The work may include replacement with a new frame and cover to be provided by others. The finished adjustment shall be flush to adjacent surfaces and of sufficient strength to support anticipated traffic. All utility adjustment work and safety requirements shall be coordinated with the appropriate utility agency.

Full compensation for complying with the work contained in this section shall be included in the contract price bid per EACH (EA) to ADJUST SEWER OR STORM DRAIN MANHOLE TO GRADE, and shall include but not be limited to saw-cut, excavation, removal and proper disposal of removed material, lowering, raising, and shall include all labor, tools, material and appurtenances necessary to complete the work and no additional compensation will be allowed thereof.

ARTICLES 12.27 ADJUST DRAIN FRAME AND COVER TO GRADE:
The Contractor shall adjust existing rectangular drain cover and frame to grade. The work shall include protection, removal or lowering of the utility structure during demolition and preparation for paving, setting the structure to grade, and forming pavement or other constructed work around

the structure. The work may include replacement with a new frame and cover to be provided by others. The finished adjustment shall be flush to adjacent surfaces and of sufficient strength to support anticipated traffic. All utility adjustment work and safety requirements shall be coordinated with the appropriate utility agency.

Full compensation for complying with the work contained in this section shall be included in the contract price bid per EACH (EA) to ADJUST DRAIN FRAME AND COVER TO GRADE, and shall include but not be limited to saw-cut, excavation, removal and proper disposal of removed material, lowering, raising, and shall include all labor, tools, material and appurtenances necessary to complete the work and no additional compensation will be allowed thereof.

ARTICLES 12.28 & 12.29 INSTALL TYPE F (BIKE DETECTION) LOOP DETECTOR PER CALTRANS STD. PLAN ES-5B; INSTALL TYPE E LOOP DETECTOR PER CALTRANS STD. PLAN ES-5B:

Contractor shall install Type F (Bike Detection) and Type E loops, as shown per plan and in accordance with Section 86 and 87 of the Standard Specifications and Caltrans Standard Plan No. ES-5B and ES-5B, except as modified or supplemented herein. Loop detectors shall have 6' diameter. Head loops shall be bicycle compatible, Type F.

Loop detector sealant shall consist of hot melt rubber asphalt sealant, in accordance with 87-1.03W, "Sealants," and 87-1.03V, "Detectors," of the Caltrans Standard Specifications.

NOTE: Whittier Blvd is within the Caltrans controlled Right of Way. The Contractor shall coordinate with Caltrans as necessary for work within and adjacent to State highways, including obtaining a Caltrans Encroachment Dual Permit, and paying for Caltrans double permit fees and inspection costs. All work necessary (including signal work, paving, BMP's, SWPPP plan, traffic control plan, and traffic control labor and equipment) to coordinate with Caltrans shall be incidental and included in the various project costs herein.

Contractor shall include in his bid prices as an incidental cost an allowance for inspection fees in accordance with the Caltrans Permit (see attached permit for reference).

Contractor shall contact the traffic signal operator prior to beginning construction to confirm the switchover of the signal to timed operation, and the expected dates for removal and installation of the traffic signal loop detectors. Existing loop leads shall be disconnected at the termination pull boxes prior to construction operations. New loop detectors shall be spliced to existing DLC's upon completion of construction.

Maintain Traffic Signals

Existing traffic signals or approved temporary replacements shall be kept in effective operation for the benefit of the traveling public during the process of the work, except when shutdown is permitted, to allow for alterations of the system. The traffic signal shutdowns shall be limited to normal working hours or shall be as specified in the Special Provisions. The Contractor shall notify the Engineer prior to performing any work on existing systems.

The Contractor shall notify the Engineer and local traffic enforcement agency prior to any operational shutdown of a traffic signal.

All installation and maintenance of temporary traffic signals shall be the responsibility of the Contractor, furnished and installed as required to maintain safe and acceptable traffic conditions.

NO ADDITIONAL COMPENSATION WILL BE ALLOWED FOR ADDITIONAL MOVE-INS REQUIRED TO CONFORM WITH PHASING SEQUENCING.

ARTICLE 12.28 - Full compensation for conforming to the requirements of INSTALL TYPE F (BIKE DETECTION) LOOP DETECTOR PER CALTRANS STD. PLAN ES-5B shall be made at the contract unit price bid per EACH (EA), and shall include full compensation for obtaining required permits, including payment of required fees, phasing, removals, replacements, labor, materials, tools, equipment and incidentals necessary to install loop detectors and restore vehicle detection as described herein.

ARTICLE 12.29 - Full compensation for conforming to the requirements of INSTALL TYPE E LOOP DETECTOR PER CALTRANS STD. PLAN ES-5B shall be made at the contract unit price bid per EACH (EA), and shall include full compensation for obtaining required permits, including payment of required fees, phasing, removals, replacements, labor, materials, tools, equipment and incidentals necessary to install loop detectors and restore vehicle detection as described herein.

ARTICLE 12.30 INSTALL STRIPING, CROSSWALKS, CURB PAINTING, MARKINGS, SIGNS, PAVEMENT MARKERS, PAINT FIRE HYDRANTS AND PAINT CURB ADDRESSESS:

The Contractor shall document all existing striping and pavement markings, curb paint and addresses, and raised pavement markers for areas within the project limits. Contractor shall lay out and install new striping and markings to replace existing striping and markings, all curb addresses and raised pavement markers, including the installation of blue reflective raised pavement markers at all fire hydrant locations. Contractor to repaint all red curbs, curb per signing and striping general notes. Contractor shall paint all curb addresses and fire hydrants within project limits. Striping and Markings shall be thermoplastic, and shall be placed per Caltrans Standard Specification Section 81: Traffic Stripes and Pavement Markings, and Section 82: Signs and Markers. Raised pavement markers shall be approved by the Engineer. The work shall include surface preparation, layout, material placement, curing, protection, testing, traffic control and all other work necessary to install the striping and markings, curb paint and addresses, and raised pavement markers.

Glass beads shall be applied to pavement markings, crosswalks, and striping by a dispensing device, for both coats, developed for this purpose or other methods approved by the Engineer. Streets and surrounding areas are to be kept clean of excess beads.

The Contractor shall furnish the necessary control points for replacement of all striping and markings and shall be responsible for the completeness and accuracy thereof to the satisfaction of the Engineer. No striping or markings shall be installed until the layout has been specifically approved by the Engineer.

Spotting shall be completed prior to the installation of any striping and markings.

A blue reflective raised pavement marker shall be placed at all fire hydrant locations per City requirements. Markers shall be placed 2 feet from centerline on the hydrant side.

Full compensation for complying with the work contained in this section shall be included in the contract bid price per LUMP SUM (LS) to INSTALL SIGNING, STRIPING, CROSSWALKS, CURB PAINTING, MARKINGS, SIGNS, AND RAISED PAVEMENT MARKERS, and shall include all labor, tools, materials and appurtenances necessary to complete the work and no additional compensation will be allowed thereof.

ARTICLE 12.31 - REMOVE EXISTING AND INSTALL NEW MANHOLE COVER MARKED "SEWER":

Contractor shall remove existing manhole cover marked "DRAIN" and install new manhole cover marked "SEWER".

Full compensation for complying with the work contained in this section shall be included in the contract bid price per EACH (EA) to REMOVE EXISTING AND INSTALL NEW MANHOLE COVER MARKED "SEWER", and shall include all labor, tools, materials and appurtenances necessary to complete the work and no additional compensation will be allowed thereof.

ARTICLE 12.32 - UNCLASSIFIED EXCAVATION AND DISPOSAL TO A DEPTH OF 8" BELOW FINISH GRADE (WIATT WAY):

Contractor shall sawcut, remove interfering asphalt concrete pavement, base aggregate, subgrade, and all other materials as necessary to prepare for placement of full depth AC pavement section. Excavation, grading and backfill shall be done in conformance with the applicable portion of Section 300 "Earthwork" of the Standard Specifications and shall include any necessary excavation, and/or fill within the right-of-way, including grading of area to finish subgrade ready for improvements, and subgrade compaction.

The Contractor shall comply with Section 300-2.6, "Surplus Material", and shall furnish written consent from the owner of the property where it is intended to dispose of surplus material.

When the exposed subgrade within 1.0 foot of the grading plane has a relative compaction of less than ninety percent (90%), the subgrade shall be scarified and recompacted in accordance with the provisions of the Standard Specifications and the relative compaction shall be not less than ninety percent (90%). All aggregate base material shall be compacted to 95 percent of relative maximum density. Tests for compliance may be made by a representative of the City, at the expense of the City, using Test Method No. California 231. In the event the initial test fails, additional tests shall be made at the Contractor's expense.

Backfill material and placement shall conform to the applicable portions of Section 300 of the Standard Specifications.

Full compensation for complying with the work contained in this section shall be included in the contract price bid per CUBIC YARD (CY) for UNCLASSIFIED EXCAVATION AND DISPOSAL TO A DEPTH OF 8" BELOW FINISH GRADE (WIATT WAY), including but not limited to sawcut, removal and disposal of asphalt concrete pavement, base aggregate, and

subgrade soils as necessary to prepare for placement of AC pavement, subgrade preparation and compaction, and no additional compensation will be allowed therefore. Measurement shall be per the in-place quantity of material removed. “Truck measure” quantities will not be allowed.

ARTICLES 12.33 - CONSTRUCT 6” ASPHALT CONCRETE BASE COURSE TYPE B PG 64-10 (WIATT WAY):

This work shall consist of furnishing, spreading and compaction of asphalt concrete pavement base course as shown on the project plans and typical sections. Asphalt Concrete shall be in accordance with Section 203 “Bituminous Materials”, Section 302 “Roadway Surfacing” and Section 400 “Rock Products” of the Standard Specifications:.

The Contractor shall develop a paving plan based on the field conditions of the existing subgrade materials encountered on the project site. Saturated, clay, or pumping conditions shall require special planning and attention in coordination with the Engineer. The initial base course for full depth asphalt concrete pavement sections may be placed at up to 0.33 feet thickness or as otherwise approved by the Engineer. Subsequent lifts shall not exceed 0.30 feet in compacted thickness unless otherwise approved.

Asphalt concrete base course shall be Type B conforming to the provisions of subsection 203-6 of the Standard Specifications. The viscosity grade of paving asphalt shall be PG 64-10 per Section 203-1 or as determined by the Engineer.

The provisions in Section 200-1.2.1"Aggregate" of the Standard Specifications shall have the following additional requirement:

At least 75 percent, by weight, of the material retained on the No. 4 sieve shall have at least one fractured face as determined by California Test Method No. 205.

Prime Coat shall be ePrime as manufactured by Ergon Asphalt & Emulsions, Inc. or approved equivalent.

Paint binder (tack coat) shall be SS-1h Type asphaltic emulsion conforming to Section 203.3 of the Standard Specifications. Tack coat shall be applied to all vertical and horizontal surfaces prior to placement of AC.

Compacting equipment shall conform to Section 302-5 of the Standard Specifications, except that in very small areas a vibrating tamper, as approved by the Engineer, may be utilized. In general, it is desired that a steel wheeled roller shall always be utilized to finish off each course surface.

The Contractor shall place asphalt concrete pavement base course and wearing course as required by these specifications and drawings. Payment for all full depth asphalt concrete base paving shall be included in this pay item. All full depth joins shall be neatly sawcut or milled. The asphalt concrete shall be constructed to the lines, grades and designs specified on the plans and as ordered by the Engineer.

Additional full depth asphalt pavement repairs may be constructed at areas with unsuitable ("pumping") subgrade. Full depth asphalt pavement repair construction and locations shall be as approved by the Engineer and shall be paid under this item. Excavation for full-depth repairs shall be included in the Unclassified Excavation pay item.

Due to the low R value and high moisture content of subgrade soils present at various locations in the City, construction equipment and traffic shall minimize travel on subgrade soils. Contractor shall review the condition of subgrade soils encountered on site and develop a suitable paving plan. In general, the Contractor shall remove existing materials to grade with milling equipment of sufficient size to remove materials in one pass, excavator working from existing pavement surfaces, or a similar method.

Asphalt pavement material for initial paving, and the first lift of asphalt on top of the initial pavement, shall be placed with a paving machine having tracks, or other equipment capable of placing asphalt concrete while minimizing loads on the subgrade soil or base course.

Construction equipment shall minimize repeated heavy traffic loadings, such as dump trucks, traveling on the bare subgrade or repeatedly over the same pavement areas, to minimize the possibility of subgrade "pumping". Subgrade and pavement failures caused by repeated heavy load traffic shall be repaired at the expense of the Contractor.

Construction work shall be performed and scheduled to avoid the necessity of trash trucks and buses traveling on the AC pavement base course or subgrade soils.

The final lift of pavement shall be placed with conventional spreader equipment. However, the Contractor shall avoid unnecessary and repeated heavy traffic loadings on the same pavement areas.

Payment for CONSTRUCT 6" ASPHALT CONCRETE BASE COURSE PAVEMENT, TYPE B PG 64-10 (WIATT WAY) shall be at the unit price per TON, and shall include all labor, tools, materials and appurtenances necessary to complete the work and to construct the asphalt pavement complete in place. Weight certification tickets are required for payment.

ARTICLE 12.34 – CONSTRUCT 2" ARHM-GG-C PG 64-16 PAVEMENT OVERLAY (WIATT WAY):

Asphalt Rubber Hot Mix (ARHM) shall be ARHM-GG-C, conforming to the provisions of subsection 203-11 of the . The viscosity Standard Specifications ty grade of paving asphalt shall be PG 64-16 per Section 203-1 of the Standard Specifications or as determined by the Engineer. The Contractor shall only use the "Wet Process" in the manufacture of rubberized asphalt in accordance with Section 203-11 of the Standard Specifications.

Recycled Asphalt Concrete Hot Mix (RAC) or Reclaimed Asphalt Pavement (RAP) as defined in section 203-6.2.5 of the Standard Specifications shall not be allowed for use in Asphalt Rubber Hot Mix (ARHM).

Composition and Grading shall be per Section 203-11.3 of the Standard Specifications. The Contractor shall submit a copy of the asphalt concrete mix design, a sample of the asphalt concrete, a sample of the aggregate, and a sample of the paving asphalt PG 64-16 to the Engineer or its designated laboratory.

Paint binder (tack coat) shall be SS-1h Type asphaltic emulsion conforming to Section 203.3 of the Standard Specifications.

The surface course shall be spread in one layer with the use of a self-propelled paving machine and shall be spread to the after compaction thickness as shown on the Plans.

The existing surface to receive the ARHM surface course shall be clean, to the satisfaction of the Engineer and paint binder (tack coat) shall be applied at the rate of 0.10 gallons per square yard conforming to the provisions of Section 302-5.4 of the Standard Specifications. Similarly, paint binder (tack coat) shall be applied to all vertical surfaces to be joined.

Distribution, spreading and compacting shall conform to the provisions of Section 302-5 of the and Standard Specifications these Special Provisions.

The completed asphalt rubber resurfacing shall be thoroughly compacted to be free from humps, depressions or irregularities. Any ridges, indentations or other objectionable marks left on the surface of the asphalt rubber shall be eliminated by roller or other means.

The longitudinal and transverse joints shall be constructed to have a uniform finished surface throughout. The joints shall be constructed straight, neat, smooth, tight and seamless, irregular joints will not be accepted. Any finished surface with rugged appearance will be rejected.

A certificate of compliance for Asphalt Rubber binder shall be required from the materials supplier.

Tarpaulins shall be used to cover all loads from plant to project.

ARHM surface course shall be thoroughly compacted by rolling. The number of rollers necessary will be established in accordance with Section 302-9.4 of the Standard Specifications. The compacted ARHM surface course shall have a relative compaction of not less than 95 percent in accordance with Section 302-5.6.2 of the Standard Specifications.

Rolling along a joint shall be such that the widest part of the roller is on the hot side of the joint. Join lines between successive runs shall be within 5 inches of lane lines or a minimum of 12 feet outside of the outer most lane line.

Lots consisting of 500 tons will be established for ARHM surface course areas to be tested. The Contractor's or its designated laboratory shall perform density testing utilizing a properly calibrated nuclear asphalt-testing device. The Contractor shall pay for all initial testing and reasonable amount of retesting utilizing the nuclear asphalt-testing device. If the test results for any lot of ARHM surface course indicate that the relative compaction is below 95 percent, the

Contractor will be advised that he is not attaining the required relative compaction and that his materials or his procedures, or both, need adjustment. ARHM-GG spreading operations shall not continue until the Contractor has notified the Engineer of the adjustment that will be made in order to meet the required compaction. Core testing of areas not meeting the 95 percent requirement will be conducted by the Contractor's designated lab. Any and all testing will be at the sole expense of the Contractor.

If the test results for any lot of ARHM surface course continue to indicate that the relative compaction is less than 95 percent after adjustments have been made, the ARHM represented by that lot may be required to be removed and replaced at the Contractor's expense and the Contractor shall suspend all further paving operations until the Contractor can demonstrate to the City that relative compactions of 95 percent can be obtained. It shall be the sole judgment of the City Engineer to determine adequate remedy and/or a reduction in compensation for any lot failing to meet 95 percent relative compaction.

The Contractor shall provide for adequate quality control measures to ensure that delivery of asphalt rubber shall be neither too slow nor too fast to prevent stopping of the paving operation and/or cooling of the asphalt rubber material. Material delivery scheduling and handling is critical to provide for optimum compaction opportunity and maximize ride quality performance.

ADD to Section 203-11.6, "Mix Designs and Certifications," the following:
The Contractor shall submit test reports and a Certificate of Compliance for the asphalt rubber and modifier to be used.

Section 12.17.1 ROCK DUST BLOTTER:

Where traffic will have access to rubberized asphalt concrete prior to complete cooling, a rock dust blotter shall be placed as directed by the Engineer to avoid tracking per Section 302-9.7 of the Standard Specifications. Rock dust blotter shall be uniformly applied using a mechanical spreader at a rate of two pounds minimum and four pounds maximum per square yard.

The cost of Rock Dust Blotter shall be included in the unit price bid for "Asphalt Rubber Hot Mix (ARHM)" of these Specifications, and no additional compensation will be made thereof.

Full compensation for complying with the work contained in this section shall be included in the contract to CONSTRUCT 2" ARHM-GG-C PG 64-16 PAVEMENT OVERLAY (WIATT WAY) shall be at the unit price per TON, and shall include all labor, tools, materials and appurtenances necessary to complete the work and to construct the asphalt pavement complete in place. Weight certification tickets are required for payment

ARTICLE 12.35 – PROTECT IN PLACE OR REMOVE AND REINSTALL EXISTING POSTS AND BARRIER TO SAME ELEVATION AS EXISTING. REPLACE BOARDS AS NEEDED WITH PRESSURE TREATED DOUGLAS LUMBER.:
Contractor shall remove and reinstall interfering posts and barriers as necessary to prepare for placement of full depth AC pavement section and berms. If existing boards cannot be reinstalled

due to deterioration, the contractor is to replace boards with pressure treated Douglas lumber of same size. Contractor shall prime and paint (two coats) entire length of posts and barriers.

Full compensation for complying with the work contained in this section shall be included in the contract to PROTECT IN PLACE OR REMOVE AND REINSTALL EXISTING POSTS AND BARRIER TO SAME ELEVATION AS EXISTING. REPLACE BOARDS AS NEEDED WITH PRESSURE TREATED DOUGLAS LUMBER shall be at the unit price per LF, and shall include all labor, tools, materials and appurtenances necessary to complete the work and to construct the asphalt pavement complete in place.

ARTICLE 12.36 - REMOVE EXISTING AND CONSTRUCT 4" PCC RESIDENTIAL DRIVEWAY PER MODIFIED STD PLAN 110-2 TYPE A, INCLUDING PCC MOUNABLE CURB AND GUTTER:

The Contractor shall saw cut and remove existing PCC driveway, sidewalk, mountable curbs, gutters, base, subgrade, and other in-place materials as necessary for construction; prepare the subgrade, place 6" base under the mountable curb & gutter; and construct PCC driveway per Std Plan 110-2 Type A and plan details. New driveway shall match existing driveway finish and pattern as directed. Bid Item shall include excavation, PCC driveway, mountable curb and gutter within the limits of the driveway, transition from standard curb face to mountable curb face, and PCC curb within the limits of the driveway. Temporary AC slot patch shall be considered as incidental and not included in the area measurement for payment. Replacement or adjustment of any existing curb drain openings will be included in this bid item.

Driveway replacements 20' wide or greater shall be constructed one half at a time to allow for continual access. Other driveways in use, including for curb and gutter replacements only, shall be plated to maintain property access. Adequate delineation and warning shall be provided to guide access over the plates. Ramps and/or detours shall be provided to maintain pedestrian and ADA accessibility. PCC for driveways shall reach a compressive strength of 2500 psi in seven days.

Full compensation for constructing the work contained in this section shall be included in the contract price bid per SQUARE FOOT (SF) for REMOVE EXISTING AND CONSTRUCT 4" PCC RESIDENTIAL DRIVEWAY PER MODIFIED STD PLAN 110-2 TYPE A, INCLUDING MOUNTABLE PCC CURB AND GUTTER PER DETAIL, and shall include but not be limited to saw-cut, excavation, removal and proper disposal of removed material and shall include all labor, tools, material and appurtenances to construct the work and no additional compensation will be allowed thereof.

ARTICLE 12.37 REMOVE EXISTING AND CONSTRUCT 4" PCC CURB OVER 6" CMB PER STD PLAN 120-3 TYPE A1-4:

The contract bid item for Remove Existing and Construct 4" PCC Curb over 6" CMB Per STD PLAN 120-3 TYPE A1-8 shall include all labor, work and materials necessary to remove existing materials and construct the curb, curb drains, and base complete in place. The Contractor shall sawcut and remove existing PCC, asphalt, base, subgrade, and other in-place materials as necessary for construction; prepare the subgrade; place base; and construct PCC curb where noted and as shown per detail drawings. Replacement or adjustment of any existing curb drain openings will be included in this bid item.

Full compensation for complying with the work contained in this section shall be included in the contract price bid per LINEAR FOOT (LF) for REMOVE EXISTING AND CONSTRUCT 4" PCC CURB OVER 6" CMB PER STD PLAN 120-3 TYPE A1-8, and no additional compensation will be allowed therefore and shall include but not be limited to saw-cut, excavation, removal and proper disposal of removed material and all labor, tools, material and appurtenances necessary to construct the work and no additional compensation will be allowed thereof.

ARTICLE 12.38 ADJUST WATER METER BOX AND COVER TO GRADE:
The Contractor shall adjust water meter frames and covers to grade.

The finished adjustment shall be flush to adjacent surfaces and of sufficient strength to support anticipated traffic. All utility adjustment work and safety requirements shall be coordinated with the appropriate utility agency. The Contractor shall remove all debris from within meter box.

Full compensation for complying with the work contained in this section shall be included in the contract price bid per EACH (EA) to ADJUST WATER METER BOX AND COVER TO GRADE, and no additional compensation will be allowed thereof.

ARTICLE 12.39 GRIND RAISED SIDEWALKS:
The contractor shall grind raised sidewalks, raised from ¼ in. to ¾ in., smooth. The grind slope is to be 5% minimum. There are approximately 12 locations throughout the project. The contractor is to do a sample location for the City to review and approve prior to starting the work.

Full compensation for complying with the work contained in this section shall be included in the contract price bide per LINEAR FOOT (LF) to GRIND RAISED SIDEWALKS, and no additional compensation will be allowed thereof and shall include but not be limited to grinding the sidewalks smooth, proper disposal of removed material, dust control, cleanup and all labor, tools, materials and appurtenances necessary to complete the work and not additional compensation will be allowed thereof.

ARTICLE 12.40 PLANT AND STAKE STREET TREE, WITH 18 IN. ROOT BARRIERS, 24 IN. BOX STREET TREE:

The Contractor shall plant, stake street trees (Double Stake) and install 18 in. deep root barriers per Standard Specifications Section 801-1 and Standard Plans 518-3 and 520-4. Street trees are to be 24 in. box size. The street tree species are to be selected by the City. The Contractor shall water and maintain the street trees until the project punch list is completed.

Full compensation for complying with the work contained in this section shall be included in the contract price bide per EACH (EA) to PLANT AND STAKE STREET TREE, WITH 18 IN. ROOT BARRIERS, 24 IN. BOX STREET TREE, and no additional compensation will be allowed thereof and shall include but not be limited to providing street trees, planting, fertilizing, staking, installing root barriers, proper disposal of removed material, cleanup, maintaining and watering street trees, and all labor, tools, materials and appurtenances necessary to complete the work and not additional compensation will be allowed thereof.

- SECTION D -

PROPOSAL

PROPOSAL

City of La Habra
Civic Center
110 E. La Habra Blvd.
La Habra, California 90631

Gentlemen:

The undersigned hereby proposes to perform all work for which a contract may be awarded him and to furnish any and all plant, labor, services, materials, tools, equipment, supplies, transportation, utilities, and all other items and facilities necessary therefor as provided in the Contract Documents, and to do everything required therein for the project specifically set forth in documents entitled:

EUCLID STREET REHABILITATION PROJECT
(From Whittier Boulevard to Northerly City Limits)
CITY PROJECT NO. 1-R-21

together with appurtenances thereto, all as set forth on the drawing and in the specifications and other Contract Documents; and, he further proposes and agrees that if this Proposal is accepted he will contract in the form and manner stipulated to perform all the work called for by drawings, specifications and other Contract Documents and to complete all such work in strict conformity therewith within the time limits set forth therein, and that he will accept as full payment therefor the prices set forth in the Bid Sheet (s) forming a part hereof.
A *(Cashier's Check) *(Certified Check) *(Bid Bond) properly made payable to City of La Habra hereinafter designated as the Owner for the sum of _____ _____dollars ($_____), which amount is not less than ten percent (10%) of the total amount of this bid, is attached hereto and is given as a guarantee that the undersigned will execute the Agreement and furnish the required bonds if awarded the Contract; and, in case of failure to do so within the time provided the proceeds of said check shall be forfeited to the *Owner/Sureties Liability to the Owner for forfeiture of the face amount of the Bond shall be considered as established.

(*) Delete inapplicable word or phrase.

It is understood and agreed that:

1. The undersigned has carefully examined all the Contract Documents which will form a part of the Contract;
2. The undersigned has, by investigation of the site of the work and otherwise, satisfied himself as to the nature and location of the work and has fully informed himself as to all conditions and matters which can in any way affect the work or the cost thereof;
3. The undersigned fully understands the scope of the work and has checked carefully all words and figures inserted in this proposal and he further understands that the Owner will in no way be responsible for any errors or omissions in the preparation of this proposal;

4. The undersigned will execute the Agreement and furnish the required Performance and Payment Bonds and proof of insurance coverage, within ten (10) days (not including Saturdays, Sundays and holidays) after notice to him of acceptance of his bid by the Owner; and further, that this bid may not be withdrawn for a period of sixty (60) days after the date set for the opening thereof, unless otherwise required by law. If any bidder shall withdraw his bid within said period, the Contractor shall be liable under the provisions of the Bid Security or the Contract and his surety shall be liable under the Bid Bond, as the case may be;
5. The undersigned hereby certifies that this proposal is genuine and not sham or collusive or made in the interest or in behalf of any person not herein named and the undersigned has not directly or indirectly induced or solicited any other bidder to put in a sham bid or any other person, firm or corporation to refrain from bidding; the undersigned has not in any manner sought by collusion to secure for himself an advantage over any other bidder;
6. In conformance with current statutory requirements of Section 1860, et seq., of the Labor Code of the State of California, the undersigned confirms the following as his certification:

> I am aware of the provisions of Section 3700 of the Labor Code which requires every employer to be insured against liability of worker's compensation or to undertake self-insurance in accordance with the provisions before commencing the performance of the work of this contract.

NOW, in compliance with the Notice Inviting Bids and all the provisions hereinbefore stipulated, the undersigned, with full cognizance thereof, hereby proposes to perform the entire work for the prices set forth in the attached Bid Sheet(s) upon which award of the Contract is made.

Date: _____, 2023

Bidder_____

By_____

Title_____

Bidder's Post Office Address:

_____

_____

Corporation organized under
the laws of the State of

Names and addresses of all owners
of the firm or names and titles of
all officers of the corporation:

_____

_____

_____

_____

(corporate seal)

BIDDER'S INFORMATION

Contractor's License No. _____ Expiration Date _____

Classification of Contractor's License No. _____

Contractor _____
(name of firm)

By _____ _____
(signature) (title)

Business Address: _____

_____

Phone (____) _____

I/We certify that the information provided above is complete and true to the best of my/our knowledge.

_____ _____
Contractor Date

Contractor's DIR Public Works Registration No. _____

EXHIBIT A

CONTRACTOR:_____

BID SCHEDULE

EUCLID STREET REHABILITATION PROJECT
(From Whittier Boulevard to Northerly City Limits)
CITY PROJECT NO. 1-R-21

BID ITEM	DESCRIPTION	EST. QTY OF WORK	UNIT	UNIT PRICE	AMOUNT
12.01	MOBILIZATION AND DEMOBILIZATION (5% MAX OF TOTAL BID PRICE)	1	LS		
12.02	TRAFFIC CONTROL, CONSTRUCTION PHASING, PUBLIC CONVENIENCE & SAFETY (5% MAX OF TOTAL BID PRICE)	1	LS		
12.03	CONSTRUCTION SURVEY AND MONUMENT PERPETUATION	1	LS		
12.04	PREPARE AND IMPLEMENT STORM WATER POLLUTION PREVENTION PLAN (SWPPP) & IMPLEMENTATION OF BMPs	1	LS		
12.05	CLEARING & GRUBBING; LANDSCAPE PRUNING; ROOT REMOVAL; GRADING AND SITE RESTORATION; MISC MAILBOX AND SIGN ADJUSTMENTS	1	LS		
12.06	REMOVE EXISTING AND CONSTRUCT 6” PCC COMMERCIAL DRIVEWAY OVER 6” CMB PER STD PLAN 110-2 TYPE A, INCLUDING PCC CURB & GUTTER	700	SF		
12.07	REMOVE EXISTING AND CONSTRUCT 4” PCC RESIDENTIAL DRIVEWAY PER STD PLAN 110-2 TYPE A, INCLUDING PCC CURB & GUTTER	1,200	SF		
12.08	REMOVE EXISTING AND CONSTRUCT 8” PCC CURB AND GUTTER OVER 6" CMB PER STD PLAN 120-3 TYPE A2-8	300	LF		

BID ITEM	DESCRIPTION	EST. QTY OF WORK	UNIT	UNIT PRICE	AMOUNT
12.09	REMOVE EXISTING AND CONSTRUCT 8” PCC CURB OVER 6” CMB PER STD PLAN 120-3 TYPE A1-8	10	LF		
12.10	REMOVE EXISTING AND CONSTRUCT 4" THICK PCC CURB RAMP WITH DETECTABLE WARNING SURFACE INCLUDING PCC CURB & GUTTER PER CALTRANS REVISED STANDARD PLANS A88A (2018), CASE A	4	EA		
12.11	REMOVE EXISTING AND CONSTRUCT 8" PCC CROSS GUTTER AND/OR SPANDREL OVER 6" CMB PER STD PLAN 122-3	1,300	SF		
12.12	REMOVE EXISTING AND CONSTRUCT 4” PCC SIDEWALK PER STD PLAN 113-2	1,700	SF		
12.13	REMOVE EXISTING AND CONSTRUCT 48” x 48” CALTRANS TYPE G2 DROP INLET	1	EA		
12.14	REMOVE EXISTING AND CONSTRUCT 18” RCP STORM DRAIN PIPE	50	LF		
12.15	UNCLASSIFIED EXCAVATION AND DISPOSAL TO A DEPTH OF 9-1/2” BELOW FINISH GRADE	2,500	CY		
12.16	CONSTRUCT 7-1/2” ASPHALT CONCRETE BASE COURSE TYPE B PG 64-10	3,500	TON		
12.17	CONSTRUCT 2” ARHM-GG-C PG 64-16 PAVEMENT	1,050	TON		
12.18	SAWCUT AND REMOVE EXISTING PAVEMENT TO A DEPTH OF 6” BELOW FINISH GRADE. CONSTRUCT 6” PCC PAVEMENT	25	SF		
12.19	SAWCUT AND REMOVE EXISTING PAVEMENT TO A DEPTH OF 6” BELOW FINISH GRADE. CONSTRUCT 6” AC PAVEMENT	2,700	SF		
~~12.20~~	~~COLD MILL EXISTING AC PAVEMENT (2” NOMINAL)~~	~~50~~	~~SF~~	-------	---------

BID ITEM	DESCRIPTION	EST. QTY OF WORK	UNIT	UNIT PRICE	AMOUNT
12.21	CONSTRUCT SPEED LUMP PER PLAN DETAIL	9	EA		
12.22	CONSTRUCT AC BERM PER STD. PLAN 120-3 TYPE D1-8	400	LF		
12.23	EXCAVATE AND ROTATE SEWER MANHOLE ECCENTRIC CONE TO CLEAR CURB AND RECONSTRUCT MANHOLE TO GRADE	1	EA		
12.24	ADJUST WATER VALVE FRAME AND COVER TO GRADE	29	EA		
12.25	ADJUST SURVEY MONUMENT AND MONITORING WELL FRAME AND COVER TO GRADE	1	EA		
12.26	ADJUST SEWER OR STORM DRAIN MANHOLE TO GRADE	11	EA		
12.27	ADJUST DRAIN FRAME AND COVER TO GRADE	2	EA		
12.28	INSTALL TYPE F (BIKE DETECTION) LOOP DETECTOR PER CALTRANS STD. PLAN ES-5B	2	EA		
12.29	INSTALL TYPE E LOOP DETECTOR PER CALTRANS STD. PLAN ES-5B	4	EA		
12.30	INSTALL STRIPING, CROSSWALKS, CURB PAINTING, MARKINGS, SIGNS, RAISED PAVEMENT MARKERS, PAINT FIRE HYDRANTS AND PAINT CURB ADDRESSESS.	1	LS		
12.31	REMOVE EXISTING AND INSTALL NEW MANHOLE COVER MARKED “SEWER”	2	EA		
12.32	UNCLASSIFIED EXCAVATION AND DISPOSAL TO A DEPTH OF 8” BELOW FINISH GRADE (WIATT WAY)	140	CY		
12.33	CONSTRUCT 6” ASPHALT CONCRETE BASE COURSE TYPE B PG 64-10 (WIATT WAY)	210	TON		
12.34	CONSTRUCT 2” ARHM-GG-C PG 64-16 PAVEMENT OVERLAY (WIATT WAY)	70	TON		

BID ITEM	DESCRIPTION	EST. QTY OF WORK	UNIT	UNIT PRICE	AMOUNT
12.35	PROTECT IN PLACE OR REMOVE AND REINSTALL EXISTING POSTS AND BARRIER TO SAME ELEVATION AS EXISTING. REPLACE BOARDS AS NEEDED WITH PRESSURE TREATED DOUGLAS LUMBER.	80	LF		
12.36	REMOVE EXISTING AND CONSTRUCT 4" PCC RESIDENTIAL DRIVEWAY PER MODIFIED STD PLAN 110-2 TYPE A, INCLUDING PCC MOUNTABLE CURB & GUTTER PER DETAIL	600	SF		
12.37	REMOVE EXISTING AND CONSTRUCT 4" PCC CURB OVER 6" CMB PER STD PLAN 120-3 TYPE A1-8	45	LF		
12.38	ADJUST WATER METER BOX AND COVER TO GRADE	8	EA		
12.39	GRIND RAISED SIDEWALKS	70	LF		
12.40	PLANT AND STAKE STREET TREE, WITH 18 IN. ROOT BARRIERS, 24 IN. BOX STREET TREE	12	EA		

TOTAL BID PRICE FOR BID SCHEDULE IN FIGURES:$_____

TOTAL BID PRICE FOR BID SCHEDULE IN WORDS:_____

_____

Note: All bid quantities are estimated and for bidding purposes only and may be increased or decreased at the discretion of the CITY.

The TOTAL BID PRICE shall be used as the basis of bid in determining the low bid for this project.

_____

CONTRACTOR

_____

BY

_____

TITLE

_____

DATE

ACKNOWLEDGEMENT OF ADDENDA RECEIVED

The Bidder shall acknowledge the receipt of addenda by placing an "X" by each addendum received.

Addendum No. 1 _____
Addendum No. 2 _____
Addendum No. 3 _____
Addendum No. 4 _____
Addendum No. 5 _____

If an addendum or addenda have been issued by the CITY and not noted above as being received by the Bidder, the Bid Proposal may be rejected.

REFERENCES

Work similar in scope magnitude and degree of difficulty completed by Contractor within the past three (3) years:

1. Name (Firm/Agency): _____

   Address: _____

   Contact Person: _____ Telephone No. _____

   Title of Project: _____

   Project Location: _____

   Date of Completion: _____Contract Amount: $ _____

2. Name (Firm/Agency): _____

   Address: _____

   Contact Person: _____Telephone No. _____

   Title of Project: _____

   Project Location: _____

   Date of Completion: _____Contract Amount: $ _____

3. Name (Firm/Agency): _____

   Address: _____

   Contact Person: _____Telephone No. _____

   Title of Project: _____

   Project Location: _____

   Date of Completion: _____Contract Amount: $ _____

4. Name (Firm/Agency): _____

   Address: _____

   Contact Person: _____Telephone No. _____

   Title of Project: _____

   Project Location: _____

   Date of Completion: _____Contract Amount: $ _____

If Contractor has performed work for the City of La Habra within the last five (5) years, list all work done within said five years (attaché additional sheets if necessary). Note if work was done as subcontractor (include only subcontract amount):

Work Description & Contract Amount	Agency	Date Completed

Contractor's License No.: _____ Class: _____

a. Date first obtained: _____ Expiration: _____

b. Has License ever been suspended or revoked? _____

If yes, described when and why: _____

c. Any current claims against License or Bond? _____

If yes, describe claims: _____

Principals in Company (List all – attach additional sheets if necessary):

NAME	**TITLE**	**LICENSE NO. (If Applicable)**
_____	_____	_____
_____	_____	_____
_____	_____	_____

DBE BIDDER'S LIST

All bidders/proposers are requested to provide the following information for all DBE and non-DBE contractors or consultants who provided a proposal, bid, quote, or were contacted by the proposed prime. This information is also requested from the proposed prime contractor/ consultant and should be submitted with their bid/proposal. The CITY of La Habra will use this information to maintain and update a "Bidders" List to assist in the overall annual DBE goal-setting process.

Firm Name: _____ Phone: _____

Address: _____ Fax: _____

Contact Person: _____ No. of years in business: _____

Is the firm currently certified as a DBE under 49 CFR Part 26: YES: ___ NO: ___

Type of work/services/materials provided by firm? _____

_____

What was your firm's Gross Annual receipts for last year?

Less than $1 Million
Less than $5 Million
Less than $10 Million
Less than $15 Million
More than $15 Million

This form can be duplicated if necessary to report all bidders (DBEs and non-DBEs) information.

VIOLATIONS OF FEDERAL, STATE, OR LOCAL LAWS

1. Has your firm or its officers been assessed any penalties by an agency for noncompliance or violations of Federal, State, or Local labor laws and/or business or licensing regulations within the past five (5) years relating to your construction projects?

Yes/No: _____ Federal/State: _____

If "yes", identify and describe, (including agency and status):

_____

_____

_____

_____

_____

_____

_____

Have the penalties been paid? Yes/No: _____

2. Does your firm or its officers have any ongoing investigations by any public agency regarding violations of the State Labor Code, California Business and Professions Code or State Licensing Laws?

Yes/No: _____ Code/Laws: _____ Section/Article: _____

If "yes", identify and describe, (including agency and status):

_____

_____

_____

_____

_____

_____

_____

DISQUALIFICATION OR DEBARMENT

Has your firm, any officer of your firm, or any employee who has a proprietary interest in your firm ever been disqualified, removed, or otherwise prevented from bidding on, performing work on, or completing a federal, state, or local project because of a violation of law or a safety regulation?

Yes/No: _____

If yes, provide the following information (if more than once, use separate sheets):

Date: _____ Entity: _____

Location: _____

Reason: _____

_____

_____

_____

Provide Status and any Supplemental Statement: _____

_____

_____

_____

Has your firm been reinstated by this entity?

Yes/No:

LIST OF SUBCONTRACTORS

EUCLID STREET REHABILITATION PROJECT
(From Whittier Boulevard to Northerly City Limits)
CITY PROJECT NO. 1-R-21

The bidder shall list below the name and the location of the place of business of each Subcontractor who will perform work or render services to the prime contractor in or about the construction of the work or improvement in excess of one-half of one percent (1/2%) of the prime contractor's total bid or ten thousand dollars ($10,000.00) whichever is greater in accordance with the requirements of Section 4100 to 4133 inclusive of the public contracts code.

Work to be Performed	License Number	Subcontractor and Address of Office, Mill or Shops	Percent of Total Contract

Note: Do not list alternative subcontractors for the same work.

Contractor _____

BID SECURITY FORM

(Check to Accompany Bid)

(Note: The following form shall be used in case check accompanies bid.)

Accompanying this proposal is a *(Certified) *(Cashiers) check payable to the order of the City of La Habra, California, hereinafter referred to as "Owner", for

EUCLID STREET REHABILITATION PROJECT
(From Whittier Boulevard to Northerly City Limits)
CITY PROJECT NO. 1-R-21

In the amount of $_____ Dollars, this amount being ten percent (10%) of the total amount of the bid. The proceeds of this check shall become the property of said Owner provided this proposal shall be accepted by the said Owner through action if its legally constituted contracting authorities and the undersigned shall fail to execute a contract and furnish the required Performance and Payment Bonds and proof of insurance coverage within the stipulated time; otherwise, the check shall be returned to the undersigned. The proceeds of this check shall also become the property of the Owner if the undersigned shall withdraw his bid within the period of forty-five (45) days after the date set for the opening thereof unless otherwise required by law and notwithstanding the award of the Contract to another bidder.

_____

_____
Bidder

*Delete the inapplicable word.

NOTE: If the bidder desires to use a bond instead of a check, the Bid Bond form on the following pages shall be executed. The sum of this bond shall be not less than ten percent (10%) of the total amount of the bid.

BID BOND

KNOW ALL MEN BY THESE PRESENTS:

That we_____as principal and _____as surety, are held and firmly bound unto the City of La Habra, California hereinafter referred to as "Owner", in the sum of _____ Dollars ($_____) to be paid to the said Owner, its successors and assigns for which payment well and truly to be made we bind ourselves, our heirs, executors, administrators, successors and assigns, jointly and severally, firmly by these presents.

THE CONDITION OF THIS OBLIGATION IS SUCH that if the certain proposal of the above bounden for the construction of Street Improvements as specifically set forth in documents entitled:

EUCLID STREET REHABILITATION PROJECT
(From Whittier Boulevard to Northerly City Limits)
CITY PROJECT NO. 1-R-21

all in accordance with the specifications and drawings on file at the offices of the City Clerk of the City of La Habra, California and is not withdrawn within the period of sixty (60) days after the date set for the opening of bids unless otherwise required by law and notwithstanding the award of the Contract to another bidder and that if said proposal is accepted by the Owner through action of its legally constituted contracting authorities and if the above bounden his heirs, executors, administrators, successors and assigns shall duly enter into and execute a contract for such construction and shall execute and deliver the required Performance and Payment Bonds and proof of insurance coverage within ten (10) days (not including Saturdays, Sundays and Holidays) after the date of notification by and from the said Owner that the said contract is ready for execution, then this obligation shall become null and void; otherwise, it shall be and remain in full force and virtue.

IN WITNESS WHEREOF, we hereunto set hands and seal this _____ day of _____, 20__.

_____

_____

BIDDER

NOTE: The standard printed bond form of any bonding company acceptable to the Owner may be used in lieu of the foregoing approved sample bond form provided the security stipulations protecting the Owner are not in any way reduced by use of the Surety Company's printed standard form.

NON-COLLUSION AFFIDAVIT
FOR
EUCLID STREET REHABILITATION PROJECT
(From Whittier Boulevard to Northerly City Limits)
CITY PROJECT NO. 1-R-21

(TO BE EXECUTED BY EACH AWARDEE OF A PRINCIPAL CONTRACT)

STATE OF CALIFORNIA)
) SS.
)

_____, being first duly sworn,

deposes and says that he is _____
(sole owner, partner, president, secretary, etc.)

of _____

The party making the foregoing bid; that such bid is not made in the interest of or on behalf of any undisclosed person, partnership, company, association, organization or corporation; that such bid is genuine and not collusive or sham: that said bidder has not directly or indirectly induced or solicited any other bidder to put in a false or sham bid, and has not directly or indirectly colluded, conspired, connived, or agreed with any bidder or anyone else to put in a sham bid, nor that anyone shall refrain from bidding; that said bidder has not in any manner directly or indirectly sought by agreement, communication or conference with anyone to fix the bid price of said bidder or of any other bidder, nor to fix any overhead, profit cost element of such bid price nor of that of any other bidder nor to secure any advantage against the public body awarding the contract or anyone interested in the proposed contract; that all statements contained in such bid are true; and, further, that said bidder has not directly or indirectly, submitted his bid price or any breakdown thereof, nor the contents thereof, nor divulged information or data relative thereto, nor paid and will not pay any fee in connection therewith to any corporation, partnership, company, association, organization, bid depository, nor to any member of agent thereof nor to any other individual except to such person or persons as have a partnership or other financial interest with said bidder in his general business.

Signed: _____

Title: _____

Subscribed and sworn to before me

This _____day of _____, 2024

_____
SEAL OF NOTARY PUBLIC

WORKER'S COMPENSATION CERTIFICATE

(AS REQUIRED BY SECTION 1861
OF THE CALIFORNIA LABOR CODE)

I am aware of the provisions of Section 3700 of the California Labor Code, which require every employer to be insured against liability for worker's compensation, or to undertake self-insurance in accordance with the provisions of said Code, and I will comply with such provisions before commencing the performance of the Work of this Contract.

Contractor _____

By_____

Title _____

Public Contract Code Section 10285.1 Statement

In conformance with Public Contract Code Section 10285.1 (Chapter 376, Stats. 1985), the bidder hereby declares under penalty of perjury under the laws of the State of California that the bidder **has ___, has not ___** been convicted within the preceding three years of any offenses referred to in that section, including any charge of fraud, bribery, collusion, conspiracy, or any other act in violation of any state or Federal antitrust law in connection with the bidding upon, award of, or performance of, any public works contract, as defined in Public Contract Code Section 1101, with any public entity, as defined in Public Contract Code Section 1100, including the Regents of the University of California or the Trustees of the California State University. The term "bidder" is understood to include any partner, member, officer, director, responsible managing officer, or responsible managing employee thereof, as referred to in Section 10285.1.

Note: The bidder must place a check mark after "has" or "has not" in one of the blank spaces provided. The above Statement is part of the Proposal. Signing this Proposal on the signature portion thereof shall also constitute signature of this Statement. Bidders are cautioned that making a false certification may subject the certifier to criminal prosecution.

Public Contract Code Section 10162 Questionnaire

In conformance with Public Contract Code Section 10162, the Bidder shall complete, under penalty of perjury, the following questionnaire:

Has the bidder, any officer of the bidder, or any employee of the bidder who has a proprietary interest in the bidder, ever been disqualified, removed, or otherwise prevented from bidding on, or completing a federal, state, or local government project because of a violation of law or a safety regulation?

Yes _____ No _____

If the answer is yes, explain the circumstances in the following space.

Public Contract Code Section 10232 Statement

In conformance with Public Contract Code Section 10232, the Contractor, hereby states under penalty of perjury, that no more than one final unappealable finding of contempt of court by a federal court has been issued against the Contractor within the immediately preceding two year period because of the Contractor's failure to comply with an order of a federal court which orders the Contractor to comply with an order of the National Labor Relations Board.

Note: The above Statement and Questionnaire are part of the Proposal. Signing this Proposal on the signature portion thereof shall also constitute signature of this Statement and Questionnaire.

Bidders are cautioned that making a false certification may subject the certifier to criminal prosecution.

- SECTION E -

SAMPLE AGREEMENT

CITY OF LA HABRA
PUBLIC WORKS AGREEMENT FOR
EUCLID STREET REHABILITATION PROJECT
(WHITTIER BLVD TO NORTH CITY LIMITS)
CITY PROJECT NO. 1-R-21

THIS AGREEMENT (herein "Agreement"), is made and entered into this ___ day of _____, 2024 and between the **CITY OF LA HABRA**, a municipal corporation (herein "City") and **_____.** (herein "Contractor"). The parties hereto agree as follows:

W I T N E S S E T H :

A. WHEREAS, City requires the construction of roadway improvements as set forth more fully in this Agreement.

B. WHEREAS, Contractor represents to City that Contractor is qualified to perform said work and has submitted a proposal to City for the same.

C. WHEREAS, City desires to have Contractor perform said services on the terms and conditions set forth herein.

D. WHEREAS, no official or employee of City has a financial interest, within the provisions of Sections 1090-1092 of the California Government Code, in the subject matter of this Agreement.

NOW, THEREFORE, for and in consideration of the mutual covenants and conditions contained herein and for good and valuable consideration, the receipt and sufficiency of which is acknowledged by both parties, City and Contractor hereby agree as follows:

1.0 DEFINITIONS

1.1 Definitions. As used in this Agreement, the following definitions shall be applicable:

(a) Contractor. Contractor shall mean _____., a California corporation located at _____.

(b) City. City shall mean the City of La Habra, a Municipal Corporation and General Law City, located at 110 E. La Habra Blvd, La Habra, California 90631.

(c) City Council. City Council shall mean the City Council of the City of La Habra.

(d) Contract Officer shall mean the person designated by the City Manager or City Engineer of City and shall have the duties set forth in Section 5.2.

(e) Services. Services shall mean the services to be performed by the Contractor pursuant to this Agreement.

(f) Satisfactory. Satisfactory shall mean satisfactory to the City Manager or his/her designee.

2.0 SERVICES OF CONTRACTOR

2.1 Scope of Services. In compliance with all terms and conditions of this Agreement, the Contractor shall provide those services specified in the "Scope of Services" attached hereto as Exhibit "A" and incorporated herein by this reference, which services may be referred to herein as the "services" or "work" hereunder. As a material inducement to the City entering into this Agreement, Contractor represents and warrants that Contractor is a provider of first class work and services and Contractor is experienced in performing the work and services contemplated herein and, in light of such status and experience, Contractor covenants that it shall follow the highest professional standards in performing the work and services required hereunder and that all materials will be of good quality, fit for the purpose intended.

2.2 Documents Included in Contract. This contract consists of this Agreement and any Exhibits, which are incorporated herein by this reference. In the event of an inconsistency, the terms of this Agreement shall govern.

2.3 Compliance with Law. All services rendered hereunder shall be provided in accordance with all ordinances, resolutions, statutes, rules, and regulations of the City and any Federal, State or local governmental agency having jurisdiction in effect at the time service is rendered, including but not limited to, the claims procedure set forth in Public Contract Code Section 9204, a summary of which is attached to this agreement as Exhibit "D."

2.4 Licenses, Permits, Fees and Assessments. Contractor shall obtain at its sole cost and expense such licenses, permits and approvals as may be required by law for the performance of the services required by this Agreement, including registration with the Department of Industrial Relations of the State of California as required by Labor Code Section 1725.5 before commencing performance under this Agreement. Contractor shall have the sole obligation to pay for any fees, assessments and taxes, plus applicable penalties and interest, which may be imposed by law and arise from or are necessary for the Contractor's performance of the services required by this Agreement, and shall indemnify, defend and hold harmless City against any such fees, assessments, taxes penalties or interest levied, assessed or imposed against City hereunder. Contractor shall be responsible for all subcontractors' compliance with this Section 2.4.

2.5 Familiarity with Work. By executing this Contract, Contractor warrants that Contractor (a) has thoroughly investigated and considered the scope of services to be performed, (b) has carefully considered how the services should be performed, and (c) fully understands the facilities, difficulties and restrictions attending performance of the services under this Agreement. If the services involve work upon any site, Contractor warrants that Contractor has or will investigate the site and is or will be fully acquainted with the conditions there existing, prior to commencement of services hereunder. Should Contractor discover any latent or unknown conditions, which will materially affect the performance of the services hereunder, Contractor shall immediately inform the City of such fact and shall not proceed except at Contractor's risk until written instructions are received from the Contract Officer.

2.6 Standard of Performance. Contractor, its subcontractors and their employees, in the performance of Contractor's work under this Agreement shall be responsible for exercising the degree of skill and care required by customarily accepted good professional practices and procedures used in the Contractor's field.

Any costs for failure to meet the foregoing standard or to correct otherwise defective work that requires re-performance of the work, shall be borne in total by the Contractor and not by the City. The failure of a

project to achieve the performance goals and objectives stated in this Agreement is not a basis for requesting re-performance unless the work conducted by Contractor and/or its subcontractors is deemed by the City to have failed the foregoing standard of performance.

In the event Contractor fails to perform in accordance with the above standard:

1. Contractor will re-perform, at its own expense, any task which was not performed to the reasonable satisfaction of City. Any work re-performed pursuant to this paragraph shall be completed within the time limitations originally set forth for the specific task involved. Contractor shall work any overtime required to meet the deadline for the task at no additional cost to the City;

2. The City shall provide a new schedule for the re-performance of any task pursuant to this paragraph in the event that re-performance of a task within the original time limitations is not feasible; and

3. The City shall have the option to direct Contractor not to re-perform any task which was not performed to the reasonable satisfaction of the City Engineer pursuant to application of (1) and (2) above. In the event the City directs Contractor not to re-perform a task, the City shall negotiate a reasonable settlement for satisfactory work performed. No previous payment shall be considered a waiver of the City's right to reimbursement.

4. Nothing contained in this section is intended to limit any of the rights or remedies which the City may have under law.

2.7 Care of Work. The Contractor shall adopt reasonable methods during the life of the Agreement to furnish continuous protection to the work, and the equipment, materials, papers, documents, plans, studies and/or other components thereof to prevent losses or damages, and shall be responsible for all such damages, to persons or property, until acceptance of the work by City, except such losses or damages as may be caused by City's own negligence.

2.8 Further Responsibilities of Parties. Both parties agree to use reasonable care and diligence to perform their respective obligations under this Agreement. Both parties agree to act in good faith to execute all instruments, prepare all documents and take all actions as may be reasonably necessary to carry out the purposes of this Agreement. Unless hereafter specified, neither party shall be responsible for the service of the other. Contractor shall require all subcontractors to comply with the provisions of this agreement.

2.9 Additional Services. City shall have the right at any time during the performance of the services, without invalidating this Agreement, to order extra work beyond that specified in the Scope of Services or make changes by altering, adding to or deducting from said work. No such extra work may be undertaken unless a written change order is first given by the Contract Officer to the Contractor, incorporating therein any adjustment in (i) the Contract Sum as set forth in Section 3.1, and/or (ii) the time to perform this Agreement, which said adjustments are subject to the written approval of the Contractor. Any increase in compensation of twenty five percent (25%) or less of the Contract Sum, or in the time to perform of one hundred eighty (180) days or less may be approved by the Contract Officer. Any increases, taken either separately or cumulatively, that result in the Contract Sum exceeding $25,000 must be approved by the City Council. It is expressly understood by Contractor that the provisions of this Section shall not apply to services specifically set forth in the Scope of Services or reasonably contemplated therein. Contractor hereby acknowledges that it accepts the risk that the services to be provided pursuant to the Scope of Services may be more costly or time consuming than Contractor anticipates and that Contractor shall not be entitled to additional compensation thereof.

2.10 Prevailing Wage Laws. Contractor represents and warrants that it is registered with the Department of Industrial Relations pursuant to SB 854 and Labor Code 1725.5. Contractor shall ensure that its subcontractors comply with said requirements. In accordance with Labor Code Section 1770 et seq., the Director of the Department of Industrial Relations of the State of California has ascertained a general prevailing rate of wages, which is the minimum amount, which shall be paid to all workers employed to perform the work pursuant to this Agreement. A copy of the general prevailing wage rate determination is on file in the Office of the City Clerk and is hereby incorporated by reference into this Agreement. In accordance with the provisions of Labor Code Section 1810 et seq., eight (8) hours is the legal working day. Contractor must forfeit to the City Twenty Five Dollars ($25.00) a day for each worker who works in excess of the minimum working hours when Contractor does not pay overtime. Contractor is required to post a copy of such wage rates at all times at the contract site. The statutory penalties for failure to pay prevailing wage or to comply with State wage and hour laws will be enforced. Contractor also shall comply with State law requirements to maintain payroll records and shall provide for certified records and inspection of records as required by California Labor Code Section 1770 et. seq., including Section 1776. Contractor shall comply with all statutory requirements relating to the employment of apprentices.

3.0 COMPENSATION

3.1 Contract Sum. For the services rendered pursuant to this Agreement, the Contractor shall be compensated as specified herein, but not exceeding the maximum contract amount of _____ Dollars ($_____) (herein "Contract Sum"), except as provided in Section 2.9. The Contract Sum shall include the attendance of Contractor at all project meetings reasonably deemed necessary by the City; Contractor shall not be entitled to any additional compensation for attending said meetings.

3.2 Progress Payments. Prior to the first day of the month, during the progress of the work, commencing on the day and month specified in the Agreement, Contractor shall submit to the Contract Officer a complete itemized statement of all labor and materials incorporated into the work during the preceding month and the portion of the contract sum applicable thereto. Upon approval in writing by the Contract Officer, payment shall be made in thirty (30) days. City shall pay Contractor a sum based upon ninety-five percent (95%) of the contract price apportionment of the labor and materials incorporated into the work under the contract during the month covered by said statement. The remaining five percent (5%) thereof shall be retained as performance security. Refer to Section 8.4 of this Agreement for retention of funds.

4.0 PERFORMANCE SCHEDULE

4.1 Time of Essence. Time is of the essence in the performance of this Agreement.

4.2 Schedule of Performance. Contractor shall commence the services pursuant to this Agreement upon receipt of a written notice to proceed and shall perform all services within the time period(s) established in Exhibit "A", and incorporated herein by this reference. When requested by the Contractor, extensions to the time period(s) specified in the Scope of Services may be approved in writing by the Contract Officer.

4.3 Force Majeure. The time period(s) specified in the Scope of Services for performance of the services rendered pursuant to this Agreement shall be extended because of any delays due to unforeseeable causes beyond the control and without the fault or negligence of the Contractor, including, but not restricted to, acts of God or of the public enemy, unusually severe weather, fires, earthquakes, floods, epidemics, quarantine restrictions, riots, strikes, freight embargoes, wars, litigation, and/or acts of any governmental agency, including the City, if the Contractor shall within ten (10) days of the commencement of such delay notify the Contract

Officer in writing of the causes for the delay. The Contract Officer shall ascertain the facts and the extent of delay, and extend the time for performing the services for the period of the enforced delay when and if in the judgment of the Contract Officer such delay is justified. The Contract Officer's determination shall be final and conclusive upon the parties to this Agreement.

4.4 Term. Unless earlier terminated in accordance with Section 8.9 of this Agreement, this Agreement shall continue in full force and effect until final approval and acceptance of the project by the Contract Officer. Notwithstanding the foregoing, this Agreement shall terminate no later than _____, 2024, unless the parties mutually agree in writing to extend the term.

5.0 COORDINATION OF WORK

5.1 Representative of Contractor. The following principals of Contractor are hereby designated as being the principals and representatives of Contractor authorized to act in its behalf with respect to the work specified herein and make all decisions in connection therewith:

_____
_____

It is expressly understood that the experience, knowledge, capability and reputation of the foregoing principals were a substantial inducement for City to enter into this Agreement. Therefore, the foregoing principals shall be responsible during the term of this Agreement for directing all activities of Contractor and devoting sufficient time to personally supervise the services hereunder. For purposes of this Agreement, the foregoing principals may not be replaced nor may their responsibilities be substantially reduced by Contractor without the express written approval of City.

5.2 Contract Officer. The Contract Officer shall be such person as may be designated by the City Administrator or City Engineer of City. It shall be the Contractor's responsibility to assure that the Contract Officer is kept informed of the progress of the performance of the services and the Contractor shall refer any decisions that must be made by City to the Contract Officer. Unless otherwise specified herein, any approval of City required hereunder shall mean the approval of the Contract Officer. The Contract Officer shall have authority to sign all documents on behalf of the City required hereunder to carry out the terms of this Agreement.

5.3 Prohibition Against Assignment. The experience, knowledge, capability and reputation of Contractor, its principals and employees were a substantial inducement for the City to enter into this Agreement. Neither this Agreement nor any interest herein may be transferred, assigned, conveyed, hypothecated or encumbered voluntarily or by operation of law, whether for the benefit of creditors or otherwise, without the prior written approval of City. Transfers restricted hereunder shall include the transfer to any person or group of persons acting in concert of more than twenty five percent (25%) of the present ownership and/or control of Contractor, taking all transfers into account on a cumulative basis. In the event of any such unapproved transfer, including any bankruptcy proceeding, this Agreement shall be void. No approved transfer shall release the Contractor or any surety of Contractor of any liability hereunder without the express consent of City.

5.4 Independent Contractor. Neither the City nor any of its employees shall have any control over the manner, mode or means by which Contractor, its subcontractors, agents or employees, performs the services required herein, except as otherwise set forth herein. City shall have no voice in the selection, discharge, supervision or control of Contractor's employees, subcontractors, servants, representatives or agents, or in fixing their number, compensation or hours of service. Contractor shall perform all services

required herein as an independent contractor of City and shall remain at all times as to City a wholly independent contractor with only such obligations as are consistent with that role. Contractor shall not at any time or in any manner represent that it or any of its subcontractors, agents or employees are agents or employees of City. City shall not in any way or for any purpose become or be deemed to be a partner of Contractor in its business or otherwise or a joint venture or a member of any joint enterprise with Contractor.

5.5 Identity of Persons Performing Work. Contractor represents that it employs or will employ at its own expense all personnel required for the satisfactory performance of any and all tasks and services set forth herein. Contractor represents that the tasks and services required herein will be performed by Contractor or under its direct supervision, and that all personnel engaged in such work shall be fully qualified and shall be authorized and permitted under applicable State and local law to perform such tasks and services.

5.6 Utility Relocation.City is responsible for removal, relocation, or protection of existing main or trunkline utilities to the extent such utilities were not identified in the invitation for bids or specifications. City shall reimburse contractor for any costs incurred in locating, repairing damage not caused by contractor and removing or relocating such unidentified utility facilities, including equipment idled during such work. Contractor shall not be assessed liquidated damages for delay arising from the removal or relocation of such unidentified utility facilities.

5.7 Trenches or Excavations. Pursuant to California Public Contract Code Section 7104, in the event the work included in this Agreement requires excavations more than four (4) feet in depth, the following shall apply.

(a) Contractor shall promptly, and before the following conditions are disturbed, notify City, in writing, of any: (1) material that Contractor believes may be material that is hazardous waste, as defined in Section 25117 of the Health and Safety Code, that is required to be removed to a Class I, Class II, or Class III disposal site in accordance with provisions of existing law; (2) Subsurface or latent physical conditions at the site different from those indicated; or (3) Unknown physical conditions at the site of any unusual nature, different materially from those ordinarily encountered and generally recognized as inherent in work of the character provided for in the contract.

(b) City shall promptly investigate the conditions, and if it finds that the conditions do materially so differ, or do involve hazardous waste, and cause a decrease or increase in Contractor's cost of, or the time required for, performance of any part of the work shall issue a change order per Section 2.9 of this Agreement.

(c) That, in the event that a dispute arises between City and Contractor whether the conditions materially differ, or involve hazardous waste, or cause a decrease or increase in Contractor's cost of, or time required for, performance of any part of the work, Contractor shall not be excused form any scheduled completion date provided for by the contract, but shall proceed with all work to be performed under the contract. Contractor shall retain any and all rights provided either by contract or by law, which pertain to the resolution of disputes and protests between the contracting parties.

6.0 INSURANCE, INDEMNIFICATION AND BONDS

6.1 Insurance. The Contractor and all subcontractors, if any, shall procure and maintain, at its sole cost and expense, in a form and content satisfactory to City, during the entire term of this Agreement including any extension thereof, insurance as set forth in Exhibit "B" attached hereto and incorporated herein by this reference.

Conditions:

The insurance of surety companies who provide or issue the policy shall have been admitted to do business in the State of California with a credit rating of "A" or better.

This insurance shall not be canceled, limited in scope or coverage or non-renewed until after thirty (30) days prior written notice has been given to the Public Works Director, City of La Habra, 110 E. La Habra Blvd., La Habra, California 90631.

Any insurance maintained by the City of La Habra shall apply in excess of and not combined with insurance provided by this policy.

The City of La Habra, its officers, employees, representatives, attorneys, and volunteers shall be named as additional named insureds.

Prior to commencement of any work under this contract, Contractor shall deliver to the City insurance endorsements confirming the existence of the insurance required by this contract, and including the applicable clauses referenced above.

Such endorsements shall be signed by an authorized representative of the insurance company and shall include the signator's company affiliation and title. Should it be deemed necessary by the City, it shall be Contractor's responsibility to see that the City receives documentation, acceptable to the City, which sustains that the individual signing said endorsements is indeed authorized to do so by the insurance company.

If the Contractor fails to maintain the aforementioned insurance, or secure and maintain the aforementioned endorsement, the City may obtain such insurance, and deduct and retain the amount of the premiums for such insurance from any sums due under the agreement. However, procuring of said insurance by the City is an alternative to other remedies the City may have, and is not the exclusive remedy for failure of Contractor to maintain said insurance or secure said endorsement. In addition to any other remedies the City may have upon Contractor's failure to provide and maintain any insurance or policy endorsements to the extent and within the time herein required, the City shall have the right to order Contractor to stop work hereunder, and/or withhold any payment(s) which became due to Contractor hereunder until Contractor demonstrates compliance with the requirements hereof.

Nothing herein contained shall be construed as limiting in any way the extent to which Contractor may be held responsible for payments of damages to persons or property resulting from Contractor's or its subcontractor's performance of the work covered under this agreement.

Each contract between the Contractor and any subcontractor shall require the subcontractor to maintain the same policies of insurance that the Contractor is required to maintain pursuant to this Section 6.1 and Exhibit "B".

6.2 Certificates of Insurance. Contractor shall provide to City certificates of insurance showing the insurance coverages and required endorsements described above, in a form and content approved by City, prior to performing any services under this Agreement. The certificates of insurance and endorsements shall be attached to this Agreement as Exhibit "C", and are incorporated herein by this reference.

6.3 Indemnification. Contractor shall defend, indemnify, hold free and harmless the City of La Habra, its elected and appointed officials, officers, agents and employees, at Contractor's sole expense, from and against any and all actions, suits, claims, damages to persons or property, losses, costs, penalties, obligations, errors, omissions or liabilities, (herein "claims or liabilities") that may be asserted or claimed by any person, firm or entity arising or alleged to arise out of or in connection with the performance of the work, operations or activities of Contractor, its agents, employees, subcontractors, or invitees, provided for herein, or arising or alleged to arise from the negligent acts or omissions of Contractor hereunder, or arising or alleged to arise from Contractor's performance of or failure to perform any term, provision, covenant or condition of this Agreement.

(a) Contractor will defend any action or actions filed in connection with any of said claims or liabilities and will pay all costs and expenses, including legal costs and attorneys' fees incurred in connection therewith.

(b) Contractor will promptly pay any judgment rendered against the City, its officers, agents or employees for any such claims or liabilities arising or alleged to arise out of or in connection with Contractor's (or its agents', employees', subcontractors' or invitees') negligent performance of or failure to perform such work, operations or activities hereunder; and Contractor agrees to save and hold the City, its officers, agents, and employees harmless therefrom.

(c) In the event the City, its officers, agents or employees is made a party to any action or proceeding filed or prosecuted against Contractor for such damages or other claims arising or alleged to arise out of or in connection with the performance of or failure to perform the work, operation or activities of Contractor hereunder, Contractor shall pay to the City, its officers, agents or employees, any and all costs and expenses incurred by the City, its officers, agents or employees in such action or proceeding, including but not limited to, legal costs and attorneys' fees for counsel selected by City.

(d) Contractor's duty to defend and indemnify as set out in this Section 6.3 shall include any claims, liabilities, obligations, losses, demands, actions, penalties, suits, costs, expenses or damages or injury to persons or property arising or alleged to arise from, in connection with, as a consequence of or pursuant to any state or federal law or regulation regarding hazardous substances, including but not limited to the Federal Insecticide, Fungicide and Rodenticide Act ("FIFRA"), Comprehensive Environmental Response, Compensation and Liability Act of 1980 ("CERCLA"), Resource Conservation and Recovery Act of 1976 ("RCRA"), the Hazardous and Solid Waste Amendments of 1984, the Hazardous Material Transportation Act, the Toxic Substances control Act, the Clean Air Act, the Clean Water Act, the California Hazardous Substance Account Act, the California Hazardous Waste Control Law or the Porter-Cologne Water Quality Control Act, as any of those statutes may be amended from time to time.

Notwithstanding the foregoing, Contractor shall not be liable for the defense or indemnification of the City for claims, actions, complaints or suits arising out of the sole active negligence or willful misconduct of the City.

The Contractor's indemnification obligations pursuant to this Section 6.3 shall survive the termination of this Agreement. Contractor shall require the same indemnification from all subcontractors.

6.4 Labor and Materials and Performance Bonds. Concurrently with execution of this Agreement, Contractor shall deliver to City a labor and materials bond and a performance bond each in the sum of the amount of this Agreement, in the forms provided by the City Clerk, which secures the faithful performance of this Agreement. The bonds shall contain the original notarized signature of an authorized officer of the surety and affixed thereto shall be a certified and current copy of his power of attorney. The bonds shall be unconditional and remain in force during the entire term of the Agreement and shall be null and void only if the Contractor promptly and faithfully performs all terms and conditions of this Agreement.

6.5 Sufficiency of Insurer or Surety. Insurance required by this Agreement shall be satisfactory only if issued by companies qualified to do business in California, rated "A" or better in the most recent edition of Best Rating Guide, The Key Rating Guide or in the Federal Register, and only if they are of a financial category Class VII or better, unless such requirements are waived by the Risk Manager of the City due to unique circumstances.

6.6 Substitution of Securities. Pursuant to California Public Contract Code Section 22300, substitution of eligible equivalent securities for any monies withheld to ensure performance under the contract for the work to be performed will be permitted at the request and expense of the successful bidder.

7.0 RECORDS AND REPORTS

7.1 Reports. Contractor shall periodically prepare and submit to the Contract Officer such reports concerning the performance of the services required by this Agreement as the Contract Officer shall require. Contractor hereby acknowledges that the City is greatly concerned about the cost of work and services to be performed pursuant to this Agreement. For this reason, Contractor agrees that if Contractor becomes aware of any facts, circumstances, techniques, or events that may or will materially increase or decrease the cost of the work or services contemplated herein or, if Contractor is providing design services, the cost of the project being designed, Contractor shall promptly notify the Contract Officer of said fact, circumstance, technique or event and the estimated increased or decreased cost related thereto and, if Contractor is providing design services, the estimated increased or decreased cost estimate for the project being designed.

7.2 Records. Contractor shall keep, and require subcontractors to keep, such books and records (including but not limited to payroll records as required herein) as shall be necessary to perform the services required by this Agreement and enable the Contract Officer to evaluate the performance of such services. The Contract Officer shall have full and free access to such books and records at all times during normal business hours of City, including the right to inspect, copy, audit and make records and transcripts from such records. Such records shall be maintained for a period of three (3) years following completion of the services hereunder, and the City shall have access to such records in the event any audit is required.

7.3 Ownership of Documents. All drawings, specifications, reports, records, documents and other materials prepared by Contractor, its employees, subcontractors and agents in the performance of this Agreement shall be the property of City and shall be delivered to City upon request of the Contract Officer or upon the termination of this Agreement, and Contractor shall have no claim for further employment or additional compensation as a result of the exercise by City of its full rights of ownership of

the documents and materials hereunder. Contractor may retain copies of such documents for its own use. Contractor shall have an unrestricted right to use the concepts embodied therein. All subcontractors shall provide for assignment to City of any documents or materials prepared by them, and in the event Contractor fails to secure such assignment, Contractor shall indemnify City for all damages resulting therefrom.

7.4 Public Records Act Disclosure. Contractor has been advised and is aware that this Agreement and all reports, documents, information and data, including, but not limited to, computer tapes, discs or files furnished or prepared by Contractor, or any of its subcontractors, pursuant to this Agreement and provided to City may be subject to public disclosure as required by the California Public Records Act (California Government Code Section 6250 *et seq*.). Exceptions to public disclosure may be those documents or information that qualify as trade secrets, as that term is defined in the California Government Code Section 6254.7, and of which Contractor informs City of such trade secret. The City will endeavor to maintain as confidential all information obtained by it that is designated as a trade secret. The City shall not, in any way, be liable or responsible for the disclosure of any trade secret including, without limitation, those records so marked if disclosure is deemed to be required by law or by order of the Court.

8.0 GENERAL PROVISIONS

8.1 Governing Law. This Agreement shall be construed and interpreted both as to validity and to performance of the parties in accordance with the laws of the State of California. Legal actions concerning any dispute, claim or matter arising out of or in relation to this Agreement shall be instituted in the Superior Court of the County of Orange, State of California, or any other appropriate court in such county, and Contractor covenants and agrees to submit to the personal jurisdiction of such court in the event of such action.

8.2 Representatives. The City Administrator or his or her designee shall be the representative of City for purposes of this Agreement and may issue all consents, approvals, directives and agreements on behalf of the City, called for by this Agreement, except as otherwise expressly provided in this Agreement.

The Principal set forth in Section 5.1 above shall be the representative for Contractor for purposes of this Agreement, and shall be authorized to issue all consents, approvals, directives and agreements on behalf of Contractor called for by this Agreement, except as otherwise expressly provided in this Agreement.

i.

8.3 Disputes. In the event either party fails to perform its obligations hereunder, the nondefaulting party shall provide the defaulting party written notice of such default. The defaulting party shall have ten (10) days to cure the default; provided that, if the default is not reasonably susceptible to being cured within said ten (10) day period, the defaulting party shall have a reasonable time to cure the default, not to exceed a maximum of thirty (30) days, so long as the defaulting party commences to cure such default within ten (10) days of service of such notice and diligently prosecutes the cure to completion; provided further that if the default is an immediate danger to the health, safety and general welfare, the defaulting party shall take such immediate action as may be necessary. Notwithstanding the foregoing, the nondefaulting party may, in its sole and absolute discretion, grant a longer cure period. Should the defaulting party fail to cure the default within the time period provided in this Section, the nondefaulting party shall have the right, in addition to any other rights the nondefaulting party may have at law or in equity, to terminate this Agreement. Compliance with the provisions of this Section 8.3 shall be a condition precedent to bringing any legal action, and such compliance shall not be a waiver of any party's right to take legal action in the event that the dispute is not cured.

8.4 Retention of Funds. Progress payments shall be made in accordance with the provisions of Section 3.2 of this Agreement. In accordance with said section, City shall pay Contractor a sum based upon

ninety-five percent (95%) of the contract price apportionment of the labor and materials incorporated into the work under the contract during the month covered by said statement. The remaining five percent (5%) thereof shall be retained as performance security to be paid to the Contractor within sixty (60) days after final acceptance of the work by the City Council, after Contractor shall have furnished City with a release of all undisputed contract amounts if required by City. In the event there are any claims specifically excluded by Contractor from the operation of the release, the City may retain proceeds (per Public Contract Code 7107) of up to 150% of the amount in dispute. City's failure to deduct or withhold shall not affect Contractor's obligations hereunder.

8.5 Waiver. No delay or omission in the exercise of any right or remedy by a non-defaulting party on any default shall impair such right or remedy or be construed as a waiver. A party's consent to or approval of any act by the other party requiring the party's consent or approval shall not be deemed to waive or render unnecessary the other party's consent to or approval of any subsequent act. Any waiver by either party of any default must be in writing and shall not be a waiver of any other default concerning the same or any other provision of this Agreement.

8.6 Rights and Remedies. Rights and Remedies are cumulative except with respect to rights and remedies expressly declared to be exclusive in this Agreement, the rights and remedies of the parties are cumulative and the exercise by either party of one or more of such rights or remedies shall not preclude the exercise by it, at the same or different times, of any other rights or remedies for the same default or any other default by the other party.

8.7 Legal Action. In addition to any other rights or remedies, either party may take legal action, in law or in equity, to cure, correct or remedy any default, to recover damages for any default, to compel specific performance of this Agreement, to obtain declaratory or injunctive relief, or to obtain any other remedy consistent with the purposes of this Agreement.

8.8 Liquidated Damages. Since the determination of actual damages for any delay in performance of this Agreement would be extremely difficult or impractical to determine in the event of a breach of this Agreement, the Contractor and its sureties shall be liable for and shall pay to the City One Thousand Dollars ($1,000.00) as liquidated damages for each working day of delay in the performance of any service required hereunder, as specified in the Scope of Services (Exhibit A). The City may withhold from any monies payable on account of services performed by the Contractor any accrued liquidated damages.

8.9 Termination for Default of Contractor. If termination is due to the failure of the Contractor to fulfill its obligations under this Agreement, Contractor shall vacate any City owned property which Contractor is permitted to occupy hereunder and City may, after compliance with the provisions of Section 8.3, take over the work and prosecute the same to completion by contract or otherwise, and the Contractor shall be liable to the extent that the total cost for completion of the services required hereunder exceeds the compensation herein stipulated (provided that the City shall use reasonable efforts to mitigate such damages), and City may withhold any payments to the Contractor for the purpose of setoff or partial payment of the amounts owed the City as previously stated.

8.10 Notice. Any notice, demand, request, document, consent, approval, or communication either party desires or is required to give to the other party or any other person shall be in writing and shall be deemed to be given when served personally or deposited in the US Mail, prepaid, first-class mail, return receipt requested, addressed as follows:

To City: City of La Habra
110 E. La Habra Blvd
La Habra, California 90631
Attn.: Albert Mendoza

To Contractor:

8.11 Non-liability of City Officers and Employees. No officer or employee of the City shall be personally liable to the Contractor, or any successor in interest, in the event of any default or breach by the City or for any amount which may become due to the Contractor or to its successor, or for breach of any obligation of the terms of this Agreement.

8.12 Conflict of Interest. The Contractor warrants that it has not paid or given and will not pay or give any third party any money or other consideration for obtaining this Agreement.

Contractor and its officers, employees, associates and subcontractors, if any, will comply with all conflict of interest statutes of the State of California applicable to Contractor's services under this agreement, including, but not limited to, the Political Reform Act (Government Code Sections 81000, *et seq*.) and Government Code Section 1090. During the term of this Agreement, Contractor and its officers, employees, associates and subcontractor shall not, without the prior written approval of the City Representative, perform work for another person or entity for whom Contractor is not currently performing work that would require Contractor or one of its officers, employees, associates or subcontractors to abstain from a decision under this Agreement pursuant to a conflict of interest statute.

8.13 Covenant Against Discrimination. Contractor covenants that, by and for itself, its heirs, executors, assigns, and all persons claiming under or through them, that there shall be no discrimination against or segregation of, any person or group of persons on account of race, color, creed, religion, sex, marital status, national origin, or ancestry in the performance of this Agreement. To the extent required by law, contractor shall take affirmative action to insure that applicants are employed and that employees are treated during employment without regard to their race, color, creed, religion, sex, marital status, national origin, or ancestry.

8.14 Interpretation. The terms of this Agreement shall be construed in accordance with the meaning of the language used and shall not be construed for or against either party by reason of the authorship of this Agreement or any other rule of construction which might otherwise apply.

8.15 Severability. In the event that any one or more of the phrases, sentences, clauses, paragraphs, or sections contained in this Agreement shall be declared invalid or unenforceable by a valid judgment or decree of a court of competent jurisdiction, such invalidity or unenforceability shall not affect any of the remaining phrases, sentences, clauses, paragraphs, or sections of this Agreement which are hereby declared as severable and shall be interpreted to carry out the intent of the parties hereunder unless the invalid provision is so material that its invalidity deprives either party of the basic benefit of their bargain or renders this Agreement meaningless.

8.16 [reserved]

8.17 Unfair Business Practices Claims. In entering into a public works contract or a subcontract to supply goods, services or materials pursuant to a public works contract, the contractor or subcontractor offers and agrees to assign to the awarding body all rights, title, and interest in and to all causes of action it may have under Section 4 of the Clayton Act (15 U.S.C. Sec. 15) or under the Cartwright Act (Chapter 2, (commencing with Section 16700) of Part 2 of Division 7 of the Business and Professions Code), arising from purchases of goods, services or materials pursuant to the public works contract or the subcontract. This assignment shall be made and become effective at the time the awarding body renders final payment to the contractor without further acknowledgment by the parties. (Sec. 7103.5, California Public Contract Code).

8.18 Corporate Authority. The persons executing this Agreement on behalf of the parties hereto warrant that (i) such party is duly organized and existing, (ii) they are duly authorized to execute and deliver this Agreement on behalf of said party, (iii) by so executing this Agreement, such party is formally bound to the provisions of this Agreement, and (iv) the entering into this Agreement does not violate any provision of any other Agreement to which said party is bound.

8.19 PERS Eligibility Indemnification. In the event that Contractor or any employee, agent, or subcontractor of Contractor providing services under this Agreement claims or is determined by a court of competent jurisdiction or the California Public Employees Retirement System (PERS) to be eligible for enrollment in PERS as an employee of the City, Contractor shall indemnify, defend, and hold harmless City for the payment of any employee and/or employer contributions for PERS benefits on behalf of Contractor or its employees, agents, or subcontractors, as well as for the payment of any penalties and interest on such contributions, which would otherwise be the responsibility of City.

Notwithstanding any other agency, state or federal policy, rule, regulation, law or ordinance to the contrary, Contractor and any of its employees, agents, and subcontractors providing service under this Agreement shall not qualify for or become entitled to, and hereby agree to waive any claims to, any compensation, benefit, or any incident of employment by City, including but not limited to eligibility to enroll in PERS as an employee of City and entitlement to any contribution to be paid by City for employer contribution and/or employee contributions for PERS benefits.

8.20 Cooperation. In the event any claim or action is brought against City relating to Contractor's performance or services rendered under this Agreement, Contractor shall render any reasonable assistance and cooperation which City might require.

8.21 Legal Responsibilities. The Contractor shall keep itself informed of City, State, and Federal laws, ordinances and regulations, which may in any manner affect the performance of its services pursuant to this Agreement. The Contractor shall at all times observe and comply with all such laws, ordinances and regulations. Neither the City, nor its officers, agents, or employees shall be liable at law or in equity as a result of the Contractor's failure to comply with this section.

8.22 Termination for Convenience. The City may terminate this Agreement without cause for convenience of the City upon giving contractor 30 days prior written notice of termination of the Agreement. Upon receipt of the notice of termination the Contractor shall cease all further work pursuant to the Agreement. Upon such termination by the City the Contractor shall not be entitled to any other remedies, claims, actions, profits, or damages except as provided in this paragraph. Upon the receipt of such notice of termination Contractor shall be entitled to the following compensation:

1. The contract value of the work completed to and including the date of receipt of the notice of termination, less the amount of progress payments received by contractor.

2. Actual move-off costs including labor, rental fees, equipment transportation costs, the costs of maintaining on-site construction office for supervising the mover-off.

3. The cost of materials custom made for this Agreement which cannot be used by the Contractor in the normal course of his business, and which have not been paid for by City in progress payments.

4. All costs shall not include any markups as might otherwise be allowed by any plans or specifications which were a part of the Agreement.

The provisions of this paragraph shall supersede any other provision of the Agreement or any provision of any plans, specification, addendums or other documents which are or may become a part of this Agreement. City and Contractor agree that the provisions of this paragraph are a substantive part of the consideration for this Agreement.

8.23 Responsibility for Errors. Contractor shall be responsible for its work and results under this Agreement. Contractor, when requested, shall furnish clarification and/or explanation as may be required by the City's representative, regarding any services rendered under this Agreement at no additional cost to City. In the event that an error or omission attributable to Contractor occurs, then Contractor shall, at no cost to City, provide all necessary design drawings, estimates and other Contractor professional services necessary to rectify and correct the matter to the sole satisfaction of City and to participate in any meeting required with regard to the correction.

8.24 Order of Precedence. In the event of an inconsistency in this Agreement and any of the attached Exhibits, the terms set forth in this Agreement shall prevail. If, and to the extent this Agreement incorporates by reference any provision of any document, such provision shall be deemed a part of this Agreement. Nevertheless, if there is any conflict among the terms and conditions of this Agreement and those of any such provision or provisions so incorporated by reference, this Agreement shall govern over the document referenced.

8.25 Costs. Each party shall bear its own costs and fees incurred in the preparation and negotiation of this Agreement and in the performance of its obligations hereunder except as expressly provided herein.

8.26 No Third Party Beneficiary Rights. This Agreement is entered into for the sole benefit of City and Contractor and no other parties are intended to be direct or incidental beneficiaries of this Agreement and no third party shall have any right in, under or to this Agreement.

8.27 Headings. Paragraphs and subparagraph headings contained in this Agreement are included solely for convenience and are not intended to modify, explain or to be a full or accurate description of the content thereof and shall not in any way affect the meaning or interpretation of this Agreement.

8.28 Construction. The parties have participated jointly in the negotiation and drafting of this Agreement. In the event an ambiguity or question of intent or interpretation arises with respect to this Agreement, this Agreement shall be construed as if drafted jointly by the parties and in accordance with its fair meaning. There shall be no presumption or burden of proof favoring or disfavoring any party by virtue

of the authorship of any of the provisions of this Agreement.

8.29 Counterparts. This Agreement may be executed in one or more counterparts, each of which shall be deemed an original. All counterparts shall be construed together and shall constitute one agreement.

8.30 Funding Source Conditions – Contractor's Obligation. Contractor acknowledges that the City may be paying for the Project by using funds it receives or will receive from various funding sources in the form of grants and/or subsidies, and the like under certain terms and conditions. Contractor acknowledges and agrees that any failure of the Contractor and/or its subcontractors to perform its obligations under the Contract, including, but not limited to, timely submitting accurate reports and records, that in any way results in the City not meeting the terms and conditions placed on the funds by the funding source, or forfeiting its entitlement to or, otherwise, not receiving, the funds, then the Contractor shall be liable to pay the City for the funds not granted to the City on the Project.

8.31 Entire Agreement. This Agreement constitutes the entire agreement between the parties with respect to any matter referenced herein and supersedes any and all other prior writings and oral negotiations. This Agreement may be modified only in writing, and signed by the parties in interest at the time of such modification. The terms of this Agreement shall prevail over any inconsistent provision in any other contract document appurtenant hereto, including exhibits to this Agreement.

IN WITNESS WHEREOF, the parties have executed and entered into this Agreement as of the date first written above.

CITY OF LA HABRA,
A municipal corporation

_____ Date: _____
Jim Sadro, City Manager

CONTRACTOR

_____ Date: _____
Signature

_____
Name and Title

_____
Social Security or Taxpayer ID Number

ATTEST:

_____
Rhonda J. Barone, City Clerk

APPROVED AS TO FORM:

_____ Date: _____
Richard D. Jones, City Attorney

(Use of City Bond Form is Required)

LABOR AND MATERIAL PAYMENT BOND
PUBLIC WORK (CALIFORNIA)

KNOW ALL MEN BY THESE PRESENT:

WHEREAS, _____, as Principal, has entered into a contract dated _____, with the City of La Habra (Obligee) referred to and made a part hereof to perform the following work, to wit: _____ ..... _____ and all appurtenant work in accordance with **EUCLID STREET REHABILITATION PROJECT (FROM WHITTIER BOULEVARD TO THE NORTHERLY CITY LIMITS), CITY PROJECT NO. 1-R-21**, which requires Principal to file this bond to secure claims made in relation to the project.

NOW THEREFORE, we, _____, as Principal, and _____, a corporation organized under the laws of _____ and duly authorized to transact business in the State of California, as Surety, are held firmly bound unto the City of La Habra, as Obligee, and all sub-contractors, laborers, material persons and other persons employed in the performance of the referenced agreement, in the sum of _____ _____ Dollars ($ .00), lawful money of the United States of America, for the payment whereof well and truly to be made the Principal and Surety bind themselves, their heirs, executors, administrators, successors, and assigns, jointly and severally, firmly by these presents.

If the above bounden PRINCIPAL, his or its heirs, executors, administrators, successors, assigns, or any of his or its sub-contractors, fails to pay for any materials, provisions, provender, or other supplies, or teams, implements or machinery, used in, upon, for or about the performance of the work contracted to be done, or for any work or labor to persons named in Section 9100 or the Civil Code, thereon of any kind, or for amounts due under the Unemployment Insurance Code with respect to such work or labor deducted, withheld and paid over to the Employment Development Department from the wages of employees of the contractor and sub-contractors pursuant to Section 13020 of the Unemployment Insurance Code, that the SURETY on this bond will pay the same, in an amount not exceeding the sum specified in this bond, AND ALSO, in case suit is brought upon this bond, a reasonable attorney's fee, which shall be awarded by the court to the prevailing party in said suit, said attorney's fee to be taxed as costs in said suit and to be included in the judgment herein rendered.

As part of the obligation secured hereby, the SURETY shall not be exonerated or released from the obligation of the bond by any change, alteration, or modification in or of any contract, plans, specifications, or agreement pertaining or relating to any scheme or work of improvement or pertaining or relating to the furnishing of labor, materials, or equipment therefor, nor by any change or modification of any terms of payment or extension of the time for any payment pertaining or relating to any scheme of work of improvement, nor by any rescission or attempted rescission of the contract, agreement or bond, nor by any conditions precedent or subsequent in the bond attempting to limit the right of recovery of claimants otherwise entitled to recover under

any such contract or agreement, or under the bond, nor, where the bond is given for the benefit of claimants, by any fraud practiced by any person other than the claimant seeking to recover on the bond.

This bond shall inure to the benefit of any and all persons, companies and corporations entitled to file claims under the Civil Code so as to give them a right of action in a suit on this bond.

This bond is executed for the purpose of complying with the laws of the State of California and shall inure to the benefit of any of the persons named in Section 9100 of the Civil Code of the State of California.

IN WITNESS THEREOF, we have hereunto set our hands and seals this _____ day of _____, 2024.

(Corporate Seal)

_____
Principal

By_____

Title_____

(Corporate Seal)

_____
Principal

By_____

Title_____

APPROVED AS TO FORM:
/s/ Richard D. Jones
City Attorney

FAITHFUL PERFORMANCE BOND

KNOW ALL MEN BY THESE PRESENTS:

That we,_____

_____hereinafter referred to as

"Contractor", as principal, and_____

_____as surety, are held and firmly

bound unto City of La Habra in the sum of _____

_____

Lawful money of the United States of America for the payment of which sum well and truly to be made we bind ourselves jointly and severally, firmly by these presents.

The condition of the foregoing obligation is such that WHEREAS, said Contract has been awarded and is about to enter into the annexed contract with City of La Habra for construction of Street Improvements as specifically set forth in the documents entitled:

EUCLID STREET REHABILITATION PROJECT
(FROM WHITTIER BOULEVARD TO THE NORTHERLY CITY LIMITS)
CITY PROJECT NO. 1-R-21

and is required under the terms of the Contract to give this bond in connection with the execution of said contract.

NOW, THEREFORE, if the said Contractor shall well and truly do and perform all of the covenants and obligations of said contract on his part to be done and performed at the times and in the manner specified herein, then this obligation shall be null and void, otherwise it shall be and remain in full force and effect.

PROVIDED, that any alterations in the work to be done or the materials to be furnished which may be made pursuant to the terms of said Contract shall not in any way release either the Contractor or the surety thereunder nor shall any extensions of time granted under the provisions of said Contract release either the Contractor or the surety, and notice of such alterations or extensions of the Contract is hereby waived by the surety.

WITNESS our hands this_____day of_____, 2024.

_____
Contractor

BY: _____

(Seal)

_____
Title

APPROVED:

_____
Surety

_____ BY: _____
(Seal)

Mailing Address of Surety:

_____

_____

_____

_____
Telephone Number of Surety

(Use of City form is required)

SUPPLEMENTAL INFORMATION TO BE COMPLETED BY PRINCIPAL

If an individual, so state. If a firm or co-partnership, state the firm and give the names of all individual co-partners composing the partnership. If a Corporation, state legal name of corporation; state also the names of the president, secretary, treasurer and manager thereof.

_____
_____
_____

Business Address: _____
_____
_____

Telephone Number: _____

Date: _____

Print Name: _____
Principal

Signature: _____
Title

(Use of City form
is required)

TAX IDENTIFICATION NUMBER

The Tax Equity and Fiscal Responsibility Act of 1982 requires the payer (City of La Habra) to report to the Internal Revenue Service taxable payments to payees.

You (as a payee) are required by law to provide us with your Taxpayer Identification Number (if an individual or partnership, your Social Security Number). If you do not provide us with your correct identification number, you may be subject to a penalty imposed by the Internal Revenue Service. The payments subject to withholdings may include, but are not limited to, interest, dividends, or other payments the City of La Habra made to you. Other payments may include rents, royalties, commissions and fees for service of non-employees.

If you are exempt from income tax, we are still required, by law, to maintain a Tax Identification Number on file. **PLEASE PROVIDE YOUR TAX IDENTIFICATION NUMBER next to the appropriate listing below, sign, date and return to:**

CITY OF LA HABRA FINANCE DEPARTMENT
110 E. La Habra Blvd
La Habra, CA 90631

Exempt: Yes___ No___ Telephone ( ) _____

CORPORATION:_____

U.S.A. OR ANY AGENCIES THEREOF:_____

IRS CODE #501 TAX-EXEMPT ORGANIZATION:_____

A NON-COMMISSIONED CITY OF LA HABRA EMPLOYEE:_____

SOLE PROPRIETOR:_____

A PARTNERSHIP:_____

OTHER: _____(Explain)

Signature/Title: _____ Date:_____

BID GUARANTEE

TO THE CITY OF LA HABRA
PROJECT NO. 1-R-21

As a material inducement to the City to award the contract for **EUCLID STREET REHABILITATION PROJECT (FROM WHITTIER BOULEVARD TO THE NORTHERLY CITY LIMITS), CITY PROJECT NO. 1-R-21** to _____ _____, the undersigned ("Guarantor") has agreed to enter into this guarantee. The Guarantor hereby unconditionally guarantees to the fullest extent allowed by law the following work included in this project: _____("the work").

Guarantor guarantees that the materials and equipment used by itself and its subcontractors will be free from defects and that the work will conform to the plans and specifications. Should any of the materials or equipment prove defective or should the work as a whole, or any part thereof, prove defective for any reason whatsoever (except due to intentional torts by the City), or should the work as a whole or any part thereof fail to operate properly or fail to comply with the plans and specifications, Guarantor will, at the City's sole election: 1) reimburse the City, upon written demand, for all of the City's expenses incurred replacing or restoring any such equipment or materials, including the cost of any work necessary to make such replacement or repairs; or 2) replace any such defective material or equipment and repair said work completely, all without any cost to the City. Guarantor further guarantees that any such repair work will conform to the plans and specifications for the project. This guarantee will remain in effect for one years from the date on which the contracted for work is accepted for use by the City.

Guarantor understands and agrees that the City shall have the unqualified option to make any replacements or repairs itself or to have such replacement, repair, performed by the undersigned. The City shall have no obligation to consult with Guarantor before the City proceeds to perform any repair, replacement, or work itself. If the City elects to have Guarantor perform said repair, replacement, or work, Guarantor agrees that the repair, replacement, or work shall be performed within 15 days after receipt of a written demand from the City.

If the City elects to perform the replacement, repairs itself, Guarantor agrees to make reimbursement payment within 15 days after receipt of a written demand for payment from the City.

If the Guarantor fails or refuses to comply with this guarantee, the City shall be entitled to all costs and expenses, including attorneys and expert fees, reasonably incurred by reason of Guarantor's failure or refusal.

Guarantor Date:_____

Contractor:_____ By:_____

Title:_____

STATEMENT OF NON COLLUSION BY CONTRACTOR

The undersigned who submits herewith to the City of La Habra a bid or proposal does hereby certify:

a. That all statements of fact in such bid or proposal are true;
b. That such bid or proposal was not made in the interest of or on behalf of any undisclosed person, partnership, company, association, organization or corporation;
c. That such bid or proposal is genuine and not collusive or sham;
d. That said bidder has not, directly or indirectly by agreement, communication or conference with anyone, attempted to induce action prejudicial to the interest of the City of La Habra or of any other bidder or anyone else interested in the proposed procurement;
e. Did not, directly or indirectly, collude, conspire, connive or agree with anyone else that said bidder or anyone else would submit a false or sham bid or proposal, or that anyone should refrain from bidding or withdraw his bid or proposal;
f. Did not in any manner, directly or indirectly seek by agreement, communication or conference with anyone to raise or fix the bid or proposal price of said bidder or of anyone else, or to raise or fix any overhead, profit or cost element of his bid or proposal price, or that of anyone else;
g. Did not, directly or indirectly, submit his bid or proposal price or any breakdown thereof, or the contents thereof, or divulge information or data relative thereto, to any corporation, partnership, company, association, organization, bid depository, or to any member agent thereof, or to any individual or group of individuals, except to the City of La Habra, or to any person or persons who have a partnership or their financial interest with said bidder in his business.
h. Did not provide, directly or indirectly to any officer or employee of the City of La Habra any gratuity, entertainment, meals, or anything of value, whatsoever, which could be objectively construed as intending to invoke any form of reciprocation or favorable treatment.
i. That no officer or principal of the undersigned firm is related to any officer or employee of the city by blood or marriage within the third degree or is employed, either full or part time, by the City of La Habra either currently or within the last two (2) years.
j. That no officer or principal of the undersigned firm nor any subcontractor to be engaged by the principal has been convicted by a court of competent jurisdiction of any charge of fraud, bribery, collusion, conspiracy or any other act in violation of any state or federal antitrust law in connection with the bidding upon award of, or performance of, any public work contract, with any public entity, within the last three years.

I certify, under penalty of perjury under the laws of the State of California, that the foregoing is true and correct and that this certification was executed:

On_____at_____California.

Firm_____ _____
(Signature)

Street_____ _____
(Print Name & Title)

City_____State_____Zip_____

CERTIFICATION OF COMPLIANCE

AFFIRMATIVE ACTION REQUIREMENTS

EQUAL EMPLOYMENT OPPORTUNITY

For
EUCLID STREET REHABILITATION PROJECT
(From Whittier Boulevard to Northerly City Limits)
CITY PROJECT NO. 1-R-21

_____Certifies that:
(Contractor)

It has adopted and approved affirmative action plan in compliance with Title VII of the Civil Rights Act and the Equal Employment Opportunity Act of 1972 and agrees to submit a copy of that plan to the Assistant to the City Manager/Personnel of the City of La Habra for inspection prior to the award of contract.

Signed: _____

By: _____

Title: _____

Date: _____

EXHIBIT A

SCOPE OF SERVICES

EXHIBIT B
INSURANCE REQUIREMENTS

Contractor shall maintain and shall require all of its subcontractors, consultants, and other agents to maintain the insurance listed below. Any requirement for insurance to be maintained after completion of the work shall survive this agreement.

CITY reserves the right to review any and all of the required insurance policies and/or endorsements, but has no obligation to do so. Failure to demand evidence of full compliance with the insurance requirements set forth in this agreement or failure to identify any insurance deficiency shall not relieve Contractor from, nor be construed or deemed a waiver of, its obligation to maintain the required insurance at all times during the performance of this agreement.

A. Workers Compensation & Employers Liability Insurance

- Workers Compensation insurance with statutory limits as required by the Labor Code of the State of California.
- Employers Liability with limits of $1,000,000 per Accident; $1,000,000 Disease per employee; $1,000,000 Disease per policy.
- The policy shall include a written waiver of the insurer's right to subrogate against CITY.
- Required Evidence Of Coverage:
    1. Subrogation waiver endorsement; and
    2. Properly completed Certificate of Insurance.

B. General Liability Insurance

- Commercial General Liability Insurance no less broad than Insurance Services Office (ISO) form CG 00 01.
- Coverage shall be on a standard occurrence form. Claims-Made forms are not acceptable without prior written consent. Modified, limited or restricted Occurrence forms are not acceptable without prior written consent.
- Minimum Limits: $2,000,000 per Occurrence; $4,000,000 General Aggregate; $4,000,000 Products/Completed Operations Aggregate. The General Aggregate shall apply separately to each project. The required limits may be provided by a combination of General Liability Insurance and Commercial Excess or Umbrella Liability Insurance. If contractor maintains higher limits than the specified minimum limits, CITY requires and shall be entitled to coverage for the higher limits maintained by contractor.
- Any deductible or self-insured retention shall be shown on the Certificate of Insurance. If the deductible or self-insured retention exceeds $25,000 it must be approved in advance by CITY. Contractor is responsible for any deductible or self-insured retention and shall fund it upon CITY'S written request, regardless of whether Contractor has a claim against the insurance or is named as a party in any action involving CITY.
- Coverage shall be continued for one (1) year after completion of the work.
- CITY shall be endorsed as an additional insured for liability arising out of ongoing and completed operations by or on behalf of the contractor. CITY shall continue to be an additional insured for completed operations for (1) year after completion of the work.
- The policy definition of "insured contract" shall include assumptions of liability

arising out of both ongoing operations and the products-completed operations hazard ("f" definition of insured contract in ISO form CG 00 01, or equivalent).

- The insurance provided to the additional insureds shall be primary to, and non-contributory with, any insurance or self-insurance program maintained by them.
- The policy shall cover inter-insured suits and include a "Separation of Insureds" or "severability" clause which treats each insured separately.
- The policy shall be endorsed to include a written waiver of the insurer's right to subrogate against all persons or entities that are, or are required to be, additional insureds.
- The policy shall not contain a Contractors' Warranty or other similar language which eliminates or restricts insurance because of a subcontractor's failure to carry specific insurance or to supply evidence of such insurance.
- Required Evidence of Coverage:
    1. Copy of the additional insured endorsement or policy language granting additional insured status;
    2. Copy of the endorsement or policy language indicating that coverage applicable to the additional insureds is primary and non-contributory;
    3. Properly completed Certificate of Insurance; and
    4. Completed and signed Agent/Broker Questionnaire with supporting documentation as required.

C. Automobile Liability Insurance

- Minimum Limit: $2,000,000 combined single limit per accident.
- Coverage shall apply to all owned, hired and non-owned vehicles.
- CITY shall qualify as an insured.
- Required Evidence of Coverage:
    1. Copy of the endorsement or policy language indicating that CITY is an insured; and
    2. Properly completed Certificate of Insurance.

D. Surety Bonds

- Bid bond.
- Performance and payment bonds for the entire contract price.
- The surety must be authorized to issue these bonds in the State of California.

E. Standards for Insurance Companies

- Insurers, other than the California State Compensation Insurance Fund, shall have an A.M. Best's rating of at least A:VII.

F. Documentation

- The Certificate of Insurance shall include the following reference: [_____]
- The name and address for Additional Insured endorsements and Certificates of Insurance is: City of La Habra
- Contractor shall provide immediate written notice if: (1) any of the required insurance policies is terminated; (2) the limits of any of the required policies are

reduced; or (3) the deductible or self-insured retention is increased.

- Current Evidence of Coverage shall be provided for the entire required period of insurance.
- Upon written request, certified copies of required insurance policies shall be provided within thirty (30) days.

EXHIBIT C

CERTIFICATES OF INSURANCE AND ENDORSEMENTS

EXHIBIT D

CLAIMS PROCEDURE

SUMMARY OF PUBLIC CONTRACT CODE § 9204

The following procedure will apply to any claims by the Contractor on the City:

A "claim" is a separate demand on the City by a contractor on a public works project and sent by registered mail or certified mail with return receipt requested, for one or more of the following:

- A time extension, including relief from penalties for delay
- Payment by the City of money damages under the terms of the contract
- Payment of an amount that is disputed by the City

Initial Review

The claim must be supported by appropriate documentation. The City has 45 days within which to review the claim and provide the contractor with a written statement identifying the disputed and undisputed portions of the claim. If the City does not issue a written statement, the claim is deemed rejected in its entirety. The City will pay any undisputed portion of the claim within 60 days of issuing the statement.

Meet & Confer

If the contractor disputes the City's written response, or if the City does not issue one, the contractor may request in writing an informal conference to meet and confer for possible settlement of the claim. The City will schedule the meet and confer conference within 30 days of this request and provide a written statement identifying the remaining disputed and undisputed portions of the claim within 10 business days of the meet and confer. The City will pay the undisputed portion within 60 days of issuing this statement.

Mediation

With respect to any disputed portion remaining after the meet and confer, the City and contractor will submit the matter to nonbinding mediation, agree to a mediator within 10 business days after issuing the written statement, and share mediation costs equally. If mediation is unsuccessful, then the terms of the public works agreement and applicable law will govern resolution of the dispute.

Miscellaneous Provisions

Amounts not paid by the City in a timely manner bear interest at 7% per annum. Subcontractors may submit claims via this procedure through the general contractor. The City and contractor may waive the requirement to mediate, but cannot otherwise waive these claim procedures.

APPENDIX “A”

PROJECT PLANS

CITY OF LA HABRA
PUBLIC WORKS DEPARTMENT
ENGINEERING DIVISION

EUCLID STREET REHABILITATION PROJECT
WHITTIER BLVD TO NORTH CITY LIMITS
CITY PROJECT NO. 1-R-21

GENERAL NOTES

1. ALL WORK SHALL CONFORM TO THE STANDARD SPECIFICATIONS FOR 2021 PUBLIC WORKS CONSTRUCTION (GREEN BOOK), DEPARTMENT OF TRANSPORTATION STANDARD PLANS & SPECIFICATIONS, & PROJECT SPECIAL PROVISIONS.

2. THE CONTRACTOR SHALL NOTIFY THE CITY OF LA HABRA PUBLIC WORKS DEPARTMENT AT (368)-303-4170 LEAST TWO WORKING DAYS (48 HOURS) PRIOR TO STARTING CONSTRUCTION.

3. ALL UNDERGROUND FACILITIES SHALL BE INSTALLED PRIOR TO SURFACING OF STREETS.

4. TRAFFIC CONTROL AND SAFETY DEVICES SHALL BE INSTALLED PER THE WORK AREA TRAFFIC CONTROL HANDBOOK (WATCH MANUAL), AND TO THE SATISFACTION OF THE CITY. CONTRACTOR SHALL PROVIDE TRAFFIC CONTROL PLAN SIGNED BY LICENSED TRAFFIC ENGINEER FOR WHITTIER BLVD.

5. EXISTING PAVEMENT DISTURBED SHALL BE REPLACED IN KIND & RESTRIPED. A PERMIT ISSUED BY THE CITY IS REQUIRED.

6. IT SHALL BE THE CONTRACTOR'S RESPONSIBILITY TO ARRANGE FOR AND COORDINATE THE RELOCATION OF ANY EXISTING UTILITIES DEEMED NECESSARY BY THE PROPOSED IMPROVEMENTS WITH NO ADDITIONAL COST TO THE CITY.

7. THE CONTRACTOR SHALL BE RESPONSIBLE FOR PROTECTION OF EXISTING UTILITIES. ANY DAMAGE TO SUCH FACILITIES CAUSED BY HIS WORK SHALL BE REPAIRED BY THE CONTRACTOR AT HIS EXPENSE.

8. THE CONTRACTOR SHALL MAINTAIN ADJACENT STREETS IN A NEAT, CLEAN, DUST FREE AND SANITARY CONDITION TO THE SATISFACTION OF THE CITY. THE ADJACENT STREETS SHALL BE KEPT CLEAN OF DEBRIS, WITH DUST AND OTHER NUISANCES BEING CONTROLLED AT ALL TIMES. THE CONTRACTOR SHALL BE RESPONSIBLE FOR ANY CLEAN UP ON ADJACENT STREETS AFFECTED BY HIS CONSTRUCTION. STOCKPILING OF MATERIALS WITHIN THE PUBLIC RIGHT-OF-WAY IS NOT ALLOWED.

9. NEW CONCRETE SHALL MATCH EXISTING CONCRETE IN COLOR, FINISH, AND TEXTURE, TO THE APPROVAL OF THE ENGINEER.

10. CONTRACTOR SHALL OBTAIN ALL REQUIRED O.S.H.A. PERMITS PRIOR TO CONSTRUCTION OF UNDERGROUND FACILITIES.

11. ACCESS RAMPS, DRIVEWAY APRONS, CURBS, OR GUTTERS DISTURBED BY CONSTRUCTION SHALL BE REPLACED AT THE CONTRACTOR'S EXPENSE.

12. ALL SAWCUTS SHALL BE DONE BY THE WET-CUT METHOD, UNLESS OTHERWISE APPROVED BY THE ENGINEER, AND ALL SLURRY SHALL BE VACUUM REMOVED.

13. THE CONTRACTOR IS RESPONSIBLE FOR COORDINATING WITH GAS, ELECTRIC, AND TELEPHONE FOR ADJUSTMENTS OF UTILITIES AS NEEDED.

14. TWO COATS OF STRIPING WILL BE REQUIRED. CONTRACTOR TO APPLY THE SECOND COAT WITHIN ONE WEEK OF THE FIRST COAT.

15. CONTRACTOR SHALL HAVE TRAFFIC CONTROL ESTABLISHED BETWEEN THE HOURS OF 9AM-3:30 PM. LANE CLOSURES BEFORE 9AM OR AFTER 3:30PM IS NOT PERMITTED, UNLESS APPROVED BY THE ENGINEER.

16. CONTRACTOR IS ADVISED THAT PAVEMENT FABRIC MAY BE ENCOUNTERED. THE CONTRACTOR SHALL BE RESPONSIBLE FOR THE REMOVAL AND DISPOSAL OF THE FABRIC. NO ADDITIONAL REIMBURSEMENT WILL BE PAID BECAUSE OF FABRIC REMOVAL. EXPOSED FABRIC SHALL BE REMOVED PRIOR TO PAVING.

17. ALL UTILITY VALVE, VAULT, PULLBOX, MANHOLES, ETC SHALL BE ADJUSTED TO GRADE BY THE CONTRACTOR.

18. CONTRACTOR SHALL PROTECT IN PLACE (UNLESS OTHERWISE NOTED) PULL BOXES/HAND HOLES FOR TRAFFIC LOOPS. CONTRACTOR SHALL REPLACE ANY PULLBOX/HAND HOLES BOXES OR LIDS DAMAGED DURING CONSTRUCTION.

19. ANY EXISTING STREET NUMBERING ON CURB SHALL BE REPAINTED WHEN THE CURB IS REMOVED AND RECONSTRUCTED.

20. ALL SPRINKLER SYSTEM AND LANDSCAPING/GRASS SHALL BE REPAIRED/REPLACED IF IT IS BEING DISTURBED OR DAMAGED DURING CONSTRUCTION. CONTRACTOR SHALL VERIFY SPRINKLER LOCATIONS DURING CONSTRUCTION.

NOTICE: ACTUAL EXISTING SITE CONDITIONS MAY DIFFER FROM THOSE SHOWN. THE CONTRACTOR SHALL VERIFY SITE CONDITIONS PRIOR TO BIDDING. LOCATION OF EXISTING AND ABANDONED UTILITIES IS UNKNOWN OR FROM RECORD DATA ONLY. THE CONTRACTOR SHALL VERIFY TO HIS SATISFACTION LOCATIONS OF ALL UTILITIES PRIOR TO BIDDING AND CONSTRUCTION. CONTRACTOR SHALL MAINTAIN AS-BUILT RECORDS OF EXISTING UTILITIES AND INFORM THE ENGINEER IN CASE OF DISCREPANCIES.

THE CONSTRUCTION CONTRACTOR AGREES THAT IN ACCORDANCE WITH GENERALLY ACCEPTED CONSTRUCTION PRACTICES, CONSTRUCTION CONTRACTOR WILL BE REQUIRED TO ASSUME SOLE AND COMPLETE RESPONSIBILITY FOR JOB SITE CONDITIONS DURING THE COURSE OF CONSTRUCTION OF THE PROJECT, INCLUDING THE SAFETY OF ALL PERSONS AND PROPERTY; THAT THIS REQUIREMENT SHALL BE MADE TO APPLY CONTINUOUSLY AND NOT TO BE LIMITED TO NORMAL WORKING HOURS, AND CONSTRUCTION CONTRACTOR FURTHER AGREES TO DEFEND, INDEMNIFY, AND HOLD DESIGN PROFESSIONAL HARMLESS FROM ANY LIABILITY, REAL OR ALLEGED, IN CONNECTION WITH THE PERFORMANCE OF WORK ON THIS PROJECT, EXCEPTING LIABILITY ARISING FROM THE SOLE NEGLIGENCE OF DESIGN PROFESSIONAL.

THE ENGINEER PREPARING THESE PLANS WILL NOT BE RESPONSIBLE FOR, OR LIABLE FOR, UNAUTHORIZED USE OF THESE PLANS. ALL CHANGES TO THE PLANS MUST BE IN WRITING AND MUST BE APPROVED BY THE PREPARER OF THESE PLANS.

CITY OF LA HABRA ENGINEERING DIVISION	ALBERT MENDOZA	(562) 383-4151
CITY OF LA HABRA SEWER AND WATER DEPT	BRIAN JONES	(562) 383-4170
SOUTHERN CALIFORNIA GAS COMPANY	GABRIEL DAVALOS	(213) 231-7688
SOUTHERN CALIFORNIA EDISON COMPANY	JIMMY PARKIN	(714) 578-3434
FRONTIER COMMUNICATIONS	ARIAL FATALA	(714) 375-6717
MOBIL OIL	RUTH CRONON-FRUITT	(310) 212-1761
METROPOLITAN WATER DISTRICT	MATT PARRY	(714) 577-5084
CALIFORNIA DOMESTIC WATER COMPANY	CHE VENEGAS	(562) 947-3811
CRIMSON PIPELINE	APRIL HARVEY	(562) 285-4195
KINDER MORGAN	DON QUINN	(714) 560-4400
CHEVRON USA	DAVE ZERLER	(310) 669-4014
WESTCON C/O VINTAGE PRODUCTION	EMILIO RODRIGUEZ	(562)665-9255
AT&T	IVETTE GAROFANO	(714) 618-9146
PLAINS ALL AMERICAN PIPELINE	JOE MATTEO	(562) 728-2368
SPECTRUM	DOMINIC HERNANDEZ	(714) 287-9385
TORRANCE LOGISTICS COMPANY	TERI SHINDE	(310) 212-1794
CR&R		(714) 372-8209
SHELL PIPE COMPANY	CLARINDA MALDONADO	(310) 816-2063
UNOCAL	ARNA ADAMS	(213) 864-5663
LA HABRA HEIGHTS WATER COMPANY		(562) 697-6769
SUBURBAN WATER SYSTEMS	TOM MEDINA	(562) 755-5015
COUNTY SANITATION DISTRICTS OF L.A. COUNTY	WILLIAM GILBERT	(714) 593-7844
USPS		

UNDERGROUND SERVICE ALERT (USA)

IT'S THE LAW! DIAL BEFORE YOU DIG!

DIGALERT

CALL AT LEAST TWO WORKING DAYS BEFORE YOU DIG

1-800-422-4133
8-1-1

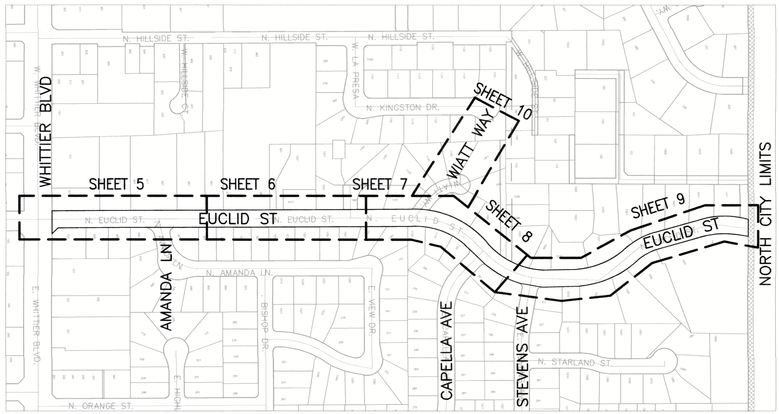

INDEX MAP

Scale: 1" = 400'

SHEET INDEX

SHEET NO.	DESCRIPTION
1	TITLE SHEET
2-4	TYPICAL SECTIONS/ DETAILS
5-9	STREET IMPROVEMENTS
10	WIATT WAY STREET IMPROVEMENTS
11-12	RAMP DETAILS
13	STRIPING PLANS
14	TRAFFIC CONTROL PLAN

MONUMENTATION AND SURVEY NOTES:

THE CONTRACTOR SHALL BE RESPONSIBLE FOR SURVEY MONUMENTS AND/OR VERTICAL CONTROL BENCHMARKS WHICH ARE DISTURBED OR DESTROYED DURING CONSTRUCTION. A LICENSED LAND SURVEYOR OR LICENSED CIVIL ENGINEER AUTHORIZED TO PRACTICE LAND SURVEYING IN THE STATE OF CALIFORNIA SHALL FIELD LOCATE, REFERENCE, AND/OR PRESERVE ALL HISTORICAL OR CONTROLLING MONUMENTS PRIOR ANY EARTHWORK, DEMOLITION OR SURFACE IMPROVEMENTS.

IF DESTROYED, A LICENSED LAND SURVEYOR SHALL REPLACE SUCH MONUMENT(S) WITH APPROPRIATE MONUMENTS. WHEN SETTING SURVEY MONUMENTS USED FOR RE-ESTABLISHMENT OF THE DISTURBED CONTROLLING SURVEY MONUMENTS AS REQUIRED BY SECTIONS 6730.2 AND 8771 OF THE BUSINESS AND PROFESSIONS CODE OF THE STATE OF CALIFORNIA. A CORNER RECORD OR RECORD OF SURVEY, AS APPROPRIATE, SHALL BE FILED WITH THE COUNTY SURVEYOR.

THE CONTRACTOR SHALL BE RESPONSIBLE FOR THE COST OF REPLACING HORIZONTAL AND VERTICAL CONTROL BENCHMARKS DESTROYED BY THE CONSTRUCTION IN COMPLIANCE WITH STATE, COUNTY, AND CITY REQUIREMENTS.

SIGNING AND STRIPING GENERAL NOTES:

1. SIGNING AND STRIPING SHALL CONFORM TO THE CURRENT CALIFORNIA MANUAL ON UNIFORM TRAFFIC CONTROL DEVICES (CA MUTCD), CALTRANS STANDARD PLANS, CALTRANS STANDARD SPECIFICATIONS, THE CITY OF CALREMONT STANDARD PLANS, AND THE SPECIAL PROVISIONS.

2. ALL NEW PAVEMENT STRIPING, PAVEMENT MARKERS, PAVEMENT LEGENDS, ARROWS, MARKINGS, AND CURB PAINTING SHALL CONFORM TO THE 2018 CALTRANS STANDARD PLANS AND CALTRANS STANDARD SPECIFICATIONS, SECTION 82 SIGNS AND MARKINGS, AND SECTION 84 MARKINGS, AND PROJECT SPECIAL PROVISIONS.

3. ALL PAVEMENT MARKINGS AND SIGN LOCATIONS MUST BE INSPECTED AND APPROVED BEFORE STRIPING BEGINS. THE INSPECTOR SHALL DETERMINE THE EXACT LIMITS OF THE MATCH STRIPING.

4. CALTRANS STANDARD STRIPING DETAILS SHALL INCLUDE THE STRIPING AND RAISED PAVEMENT MARKERS, AS NOTED. ALL STRIPPING SHALL BE THERMOPLASTIC, UNLESS NOTED OTHERWISE ON THE PLAN.

5. ALL SIGNS SHALL BE STANDARD SIZE AND SHALL CONFORM TO THE CURRENT CA MUTCD AND CALTRANS SIGN SPECIFICATIONS, UNLESS NOTED OTHERWISE ON THE PLAN.

6. STRIPING, PAVEMENT MARKINGS, AND LEGENDS SHALL BE THERMOPLASTIC AND SHALL CONFORM TO CURRENT CALTRANS STANDARD PLANS A20 A— D AND A24A— E.

7. SANDBLAST CONFLICTING EXISTING PAINT STRIPING. GRIND CONFLICTING THERMOPLASTIC STRIPING. REMOVE RAISED PAVEMENT MARKERS (RPM) WHERE NECESSARY.

8. ALL PAINTED CURBS SHALL BE DOUBLE COATED IN NOT LESS THAN 7 DAYS, BUT NO MORE THAN 14 DAYS FROM DATE OF INITIAL INSTALLATION.

9. THE POST MATERIAL SHALL BE "TELESPAR QWIK- PUNCH" OR APPROVED EQUAL WITH RECEPTIVE 30— INCH OR 36— INCH ANCHOR ASSEMBLY.

10. CONTRACTOR SHALL BLOCK OUT STAMPED CON CRETE FOR SIGN — POST SLEEVES..

11. CROSSWALKS SHALL BE INSTALLED PER CALTRANS STD. PLAN A24F OR AS INDICATED ON THE STRIPING PLAN. ALL CROSSWALKS SHALL BE THERMOPLASTIC.

12. SIGNING SHALL BE PROTECTED IN PLACE, UNLESS OTHERWISE NOTED ON PLAN.

13. SALVAGED SIGNS AND POSTS SHALL BE DELIVERED TO THE CITY YARD, AS INDICATED BY THE ENGINEER.

14. ALL CURB HOME ADDRESSES SHALL BE PAINTED/RE-PAINTED IN KIND. BLACK LETTERING ON WHITE BACKGROUND.

15. ALL EXISTING FIRE HYDRANTS SHALL BE PAINTED YELLOW.

16. ALL EXISTING RED CURBS WITHIN THE PROJECT AREA SHALL BE REPAINTED.

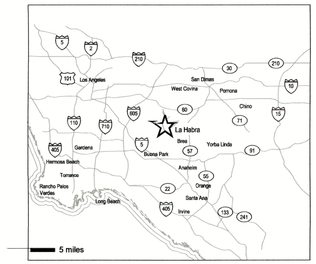

VICINITY MAP

NOT TO SCALE

LEGEND

- EXISTING WATER VALVE
- EXISTING FIRE HYDRANT
- (D) EXISTING SEWER MANHOLE
- (S) EXISTING STORM DRAIN MANHOLE
- MONITORNG WELL
- MB MAILBOX
- CB CATCH BASIN

CONSTRUCTION NOTES

- [P] PROTECT IN PLACE.
- (1) REMOVE EXISTING AND CONSTRUCT 6" PCC COMMERCIAL DRIVEWAY OVER 6" CMB PER STD PLAN 110-2 TYPE A, INCLUDING PCC CURB & GUTTER
- (2) REMOVE EXISTING AND CONSTRUCT 4" PCC RESIDENTIAL DRIVEWAY PER STD PLAN 110-2 TYPE A, INCLUDING PCC CURB & GUTTER
- (3) REMOVE EXISTING AND CONSTRUCT 8" PCC CURB AND GUTTER OVER 6" CMB PER STD PLAN 120-3 TYPE A2-8
- (4) REMOVE EXISTING AND CONSTRUCT 8" PCC CURB OVER 6" CMB PER STD PLAN 120-3 TYPE A1-8
- (5) REMOVE EXISTING AND CONSTRUCT 4" THICK PCC CURB RAMP WITH DETECTABLE WARNING SURFACE INCLUDING PCC CURB & GUTTER PER CALTRANS REVISED STANDARD PLANS A88A (2018), CASE A.
- (6) REMOVE EXISTING AND CONSTRUCT 8" PCC CROSS GUTTER AND/OR SPANDREL OVER 6" CMB PER STD PLAN 122-3.
- (7) REMOVE EXISTING AND CONSTRUCT 4" PCC SIDEWALK PER STD PLAN 113-2
- (8) REMOVE EXISTING AND CONSTRUCT 48" X 48" CALTRANS TYPE G2 DROP INLET.
- (9) REMOVE EXISTING AND CONSTRUCT 18" RCP STORM DRAIN PIPE
- (10) UNCLASSIFIED EXCAVATION AND DISPOSAL TO A DEPTH OF 9-1/2" BELOW FINISH GRADE
- (11) CONSTRUCT 7-1/2" ASPHALT CONCRETE BASE COURSE TYPE B PG 64-10
- (12) CONSTRUCT 2" ARHM-GG-C PG 64-16 PAVEMENT
- (13) ADJUST WATER VALVE FRAME AND COVER TO GRADE
- (14) ADJUST SEWER OR STORM DRAIN MANHOLE TO GRADE
- (15) ADJUST SEWER VAULT FRAME AND COVER TO GRADE
- (16) ADJUST SURVEY MONUMENT AND MONITORING WELL FRAME AND COVER TO GRADE
- (17) SAWCUT AND REMOVE EXISTING PAVEMENT TO A DEPTH OF 6" BELOW FINISH GRADE. CONSTRUCT 6" PCC PAVEMENT
- (18) SAWCUT AND REMOVE EXISTING PAVEMENT TO A DEPTH OF 6" BELOW FINISH GRADE. CONSTRUCT 6" AC PAVEMENT
- (19) COLD MILL EXISTING AC PAVEMENT (2" NOMINAL)
- (20) CONSTRUCT SPEED LUMP PER PLAN DETAIL ON SHEET 4 OF 13
- (21) CONSTRUCT AC BERM PER STD PLAN 120-3 TYPE D1-8
- (22) EXCAVATE AND ROTATE SEWER MANHOLE ECCENTRIC CONE TO CLEAR CURB AND RECONSTRUCT MANHOLE TO GRADE
- (23) ADJUST PULL BOX TO GRADE BY OTHERS
- (24) REMOVE EXISTING TREE.
- (25) REMOVE EXISTING AND INSTALL NEW MANHOLE COVER MARKED "SEWER"
- (26) REMOVE EXISTING AND INSTALL NEW MANHOLE COVER MARKED "SEWER".
- (27) UNCLASSIFIED EXCAVATION AND DISPOSAL TO A DEPTH OF 8" BELOW FINISH GRADE
- (28) CONSTRUCT 6" ASPHALT CONCRETE BASE COURSE TYPE B PG 64-10
- (29) CONSTRUCT 2" ARHM-GG-C PG 64-16 PAVEMENT
- (30) PROTECT IN PLACE OR REMOVE + REINSTALL EX. POSTS AND BARRIER TO SAME ELEVATION AS EXISTING. REPLACE BOARDS AS NEEDED WITH PRESSURE TREATED DOUGLAS LUMBER.
- (31) ADJUST GAS VALVE TO GRADE BY SO CAL GAS. CONTRACTOR TO COORDINATE.
- (32) REMOVE EXISTING AND CONSTRUCT 4" PCC RESIDENTIAL DRIVEWAY PER STD PLAN 110-2 TYPE A, INCLUDING MOUNTABLE PCC CURB & GUTTER PER DETAILS ON SHEET 4 OF 14
- (33) REMOVE EXISTING AND CONSTRUCT 4" PCC CURB OVER 6" CMB PER STD PLAN 120-3 TYPE A1-8
- (34) ADJUST WATER METER FRAME AND COVER TO GRADE

— — — W — — — — EXISTING WATER LINE (SIZE, SEE PLAN)
— — — SS — — — — EXISTING SEWER LINE (SIZE, SEE PLAN)
— — — SD — — — — EXISTING STORM DRAIN (SIZE, SEE PLAN)
——— CATV ——— EXISTING CATV LINE (SIZE, SEE PLAN)
——— G ——— EXISTING GAS LINE (SIZE, SEE PLAN)

BENCHMARK:

OCS BM 2K-15-70

DESCRIBED BY OCS 2003 - FOUND 3 ¾" OCS ALUMINUM BENCHMARK DISK STAMPED "2K-15-70", SET IN THE SOUTHEASTERLY CORNER OF A 4.5 FT. BY 8 FT. CONCRETE CATCH BASIN. MONUMENT IS LOCATED IN THE NORTHEASTERLY CORNER OF THE INTERSECTION OF WALNUT STREET AND WHITTIER BOULEVARD, 39.5 FT. EASTERLY OF THE CENTERLINE OF WALNUT AND 44 FT. NORTHERLY OF THE CENTERLINE OF WHITTIER BOULEVARD. MONUMENT IS SET LEVEL WITH THE SIDEWALK

ELEVATION = 357.94 (NAVD88, 2005 ADJ)

BASIS OF BEARINGS:

THE BEARINGS SHOWN HEREON ARE BASED ON THE CENTERLINE OF WHITTIER BLVD. BETWEEN OCS GPS POINTS 3883R2 AND 3884. THE BEARING BEING N89°05'47"W

BASED ON A SURVEY BY CL SURVEY

DATED 5/22 REF. PROJECT # 2021-ARD-03

BASED ON A GEOTECHNICAL STUDY BY GMU

DATED 7/22 REF. PROJECT # 21-123-00

CALTRANS PERMIT NO.: 1222-NSN-0324
DUAL PERMIT TO BE OBTAINED BY THE CONTRACTOR

PREPARED BY:

ARDURRA
3737 BIRCH STREET, SUITE 250
NEWPORT BEACH, CA 92660
P: 949.428.1500 F: 949.258.5053

JOSE HERNANDEZ, RCE 68384 — 08/15/24 DATE

REGISTERED PROFESSIONAL ENGINEER — JOSE L. HERNANDEZ — NO. 68384 — CIVIL — STATE OF CALIFORNIA

NO.	DATE	DESCRIPTION	BY
1			
2			
3			
4			

REVISIONS

CITY OF LA HABRA

EUCLID STREET REHABILITATION PROJECT
WHITTIER BLVD TO NORTH CITY LIMITS PROJECT No. 1-R-21
TITLE SHEET

APPROVED BY:
ALBERT MENDOZA, P.E., CITY ENGINEER
DATE 8.22.24

RECOMMENDED BY:
ANDREW N. LUNA P.E., ASSOCIATE CIVIL ENGINEER
DATE 8/22/2024

DWG. NO. I-D-XXX

SHEET 1 OF 14

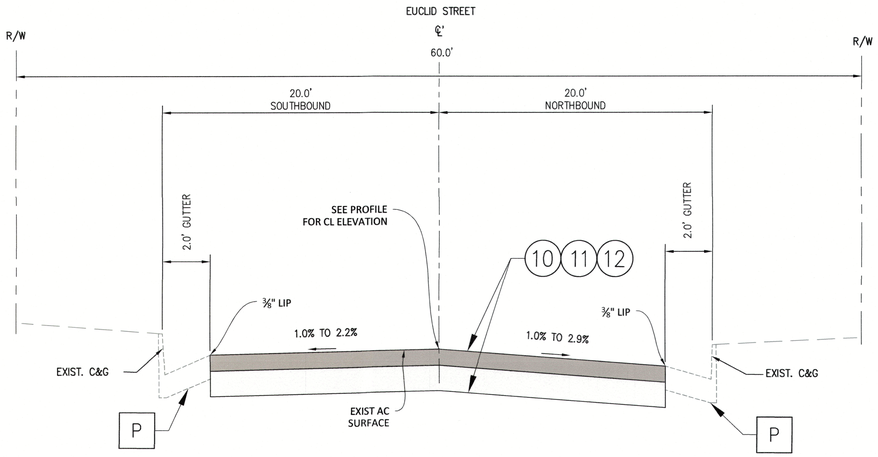

10+60 TO 17+50
TYPICAL SECTION
NTS

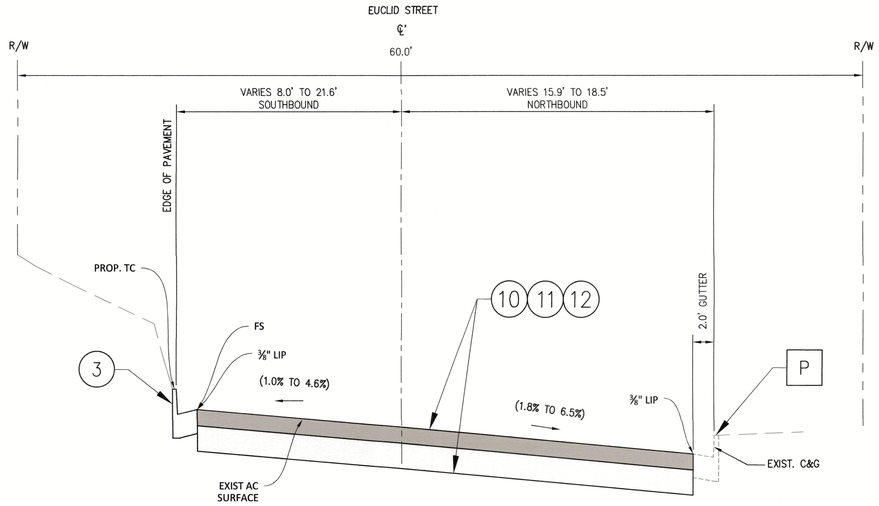

BETWEEN STA 23+25 TO 24+00 THE ROAD TRANSITIONS TO A SUPERELEVATED SECTION, THE ROAD FLOWING NORTHBOUND

BETWEEN STA 27+00 TO 28+00 THE ROAD TRANSITIONS TO A SUPERELEVATED SECTION, THE ROAD FLOWING NORTHBOUND

23+50 TO 30+00
TYPICAL SECTION
NTS

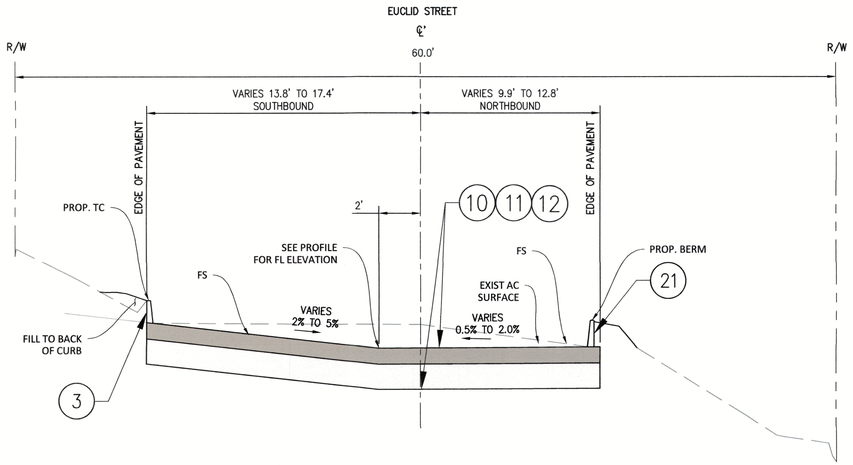

17+50 TO 23+50
TYPICAL SECTION
NTS

ABBREVIATIONS

AC	ASPHALT CONCRETE
ARHM	ASPHALT RUBBER HOT MIX
AVE	AVENUE
BEG	BEGIN
BC	BEGIN CURB
BLVD	BOULEVARD
CB	CATCH BASIN
CF	CURB FACE
CL	CENTERLINE
CTV	CABLE TV PULL BOX
DI	DRAINAGE INLET
DWY	DRIVEWAY
EA	EACH
EC	END CURVE
EC	ELECTRIC CONDUIT
EP	EDGE OF PAVEMENT
EV	ELECTRIC VAULT
EX, EXIST	EXISTING
FH	FIRE HYDRANT
FL	FLOW LINE
FS	FINISHED SURFACE
GV	GATE VALVE
HTS	HEIGHTS
HORIZ	HORIZONTAL
LN	LANE
MB	MAIL BOX
MW	MONITORING WELL
PCC	PORTLAND CEMENT CONCRETE
PP	POWER POLE
R	RADIUS
RETWALL	RETAINING WALL
R/W	RIGHT-OF-WAY
SHT	SHEET
SL	STREET LIGHT
SPPWC	STANDARD PLANS FOR PUBLIC WORKS CONSTRUCTION
ST	STREET
STA	STATION
STD	STANDARD
TELECOM	TELECOMMUNICATION
TC	TOP OF CURB
TCAB	TELEVISION CABLE
TS	TRAFFIC SIGNAL
TSPB	TRAFFIC SIGNAL PULL BOX
TVLT	TELEVISION VAULT
VERT	VERTICAL
WM	WATER METER

CONSTRUCTION NOTES

- (P) PROTECT IN PLACE.
- (3) REMOVE EXISTING AND CONSTRUCT 8" PCC CURB AND GUTTER OVER 6" CMB PER STD PLAN 120-3 TYPE A2-8
- (10) UNCLASSIFIED EXCAVATION AND DISPOSAL TO A DEPTH OF 9-1/2" BELOW FINISH GRADE
- (11) CONSTRUCT 7-1/2" ASPHALT CONCRETE BASE COURSE TYPE B PG 64-10
- (12) CONSTRUCT 2" ARHM-GG-C PG 64-16 PAVEMENT
- (21) CONSTRUCT AC BERM PER STD PLAN 120-3 TYPE D1-8

LEGEND

AC OVERLAY

AC BASE

PREPARED BY:
ARDURRA
3737 BIRCH STREET, SUITE 250
NEWPORT BEACH, CA 92660
P: 949.428.1500 F: 949.258.5053

REGISTERED PROFESSIONAL ENGINEER
JOSE L. HERNANDEZ
NO. 68384
CIVIL
STATE OF CALIFORNIA

REV	DATE	DESCRIPTION	APP'D
1			
2			
3			
4			

REVISIONS

CITY OF LA HABRA

EUCLID STREET REHABILITATION PROJECT
WHITTIER BLVD TO NORTH CITY LIMITS PROJECT No. 1-R-21
TYPICAL SECTIONS

SUBMITTED BY:
JOSE HERNANDEZ, P.E., PROJECT ENGINEER
DATE 08/15/24

RECOMMENDED BY:
ANDREW N. LUNA, P.E., ASSOCIATE CIVIL ENGINEER
DATE 8/22/2024

DWG. NO. I-D-XXX

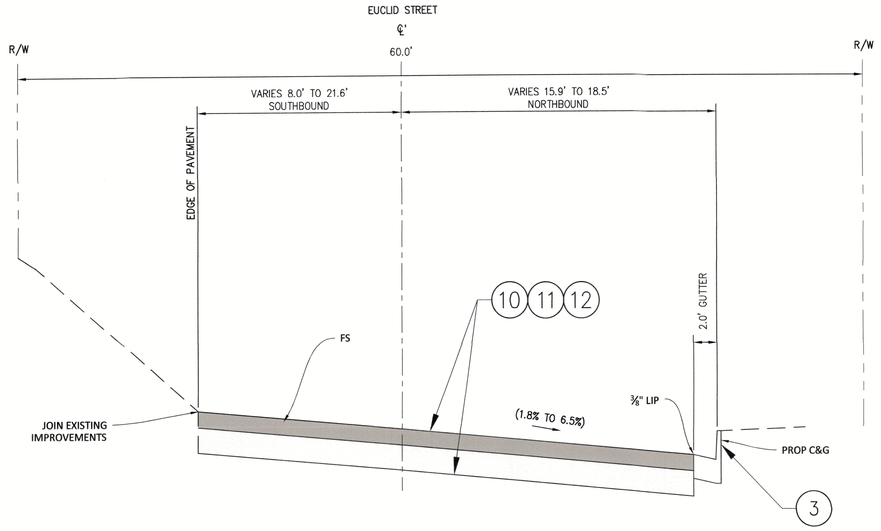

30+00 TO 32+50
TYPICAL SECTION

NTS

CONSTRUCTION NOTES

- P — PROTECT IN PLACE.
- 3 — REMOVE EXISTING AND CONSTRUCT 8" PCC CURB AND GUTTER OVER 6" CMB PER STD PLAN 120-3 TYPE A2-8
- 10 — UNCLASSIFIED EXCAVATION AND DISPOSAL TO A DEPTH OF 9-1/2" BELOW FINISH GRADE
- 11 — CONSTRUCT 7-1/2" ASPHALT CONCRETE BASE COURSE TYPE B PG 64-10
- 12 — CONSTRUCT 2" ARHM-GG-C PG 64-16 PAVEMENT
- 21 — CONSTRUCT AC BERM PER STD PLAN 120-3 TYPE D1-8
- 27 — UNCLASSIFIED EXCAVATION AND DISPOSAL TO A DEPTH OF 8" BELOW FINISH GRADE
- 28 — CONSTRUCT 6" ASPHALT CONCRETE BASE COURSE TYPE B PG 64-10
- 29 — CONSTRUCT 2" ARHM-GG-C PG 64-16 PAVEMENT

LEGEND

- AC OVERLAY
- AC BASE

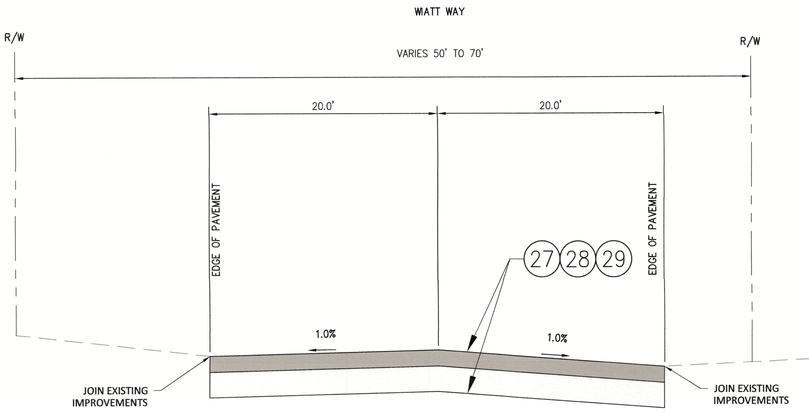

WIATT WAY
EUCLID TO W'LY END
TYPICAL SECTION

NTS

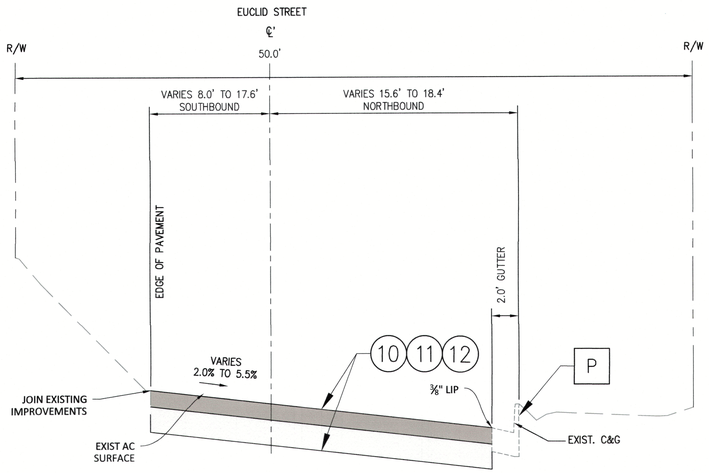

32+50 TO 36+50
TYPICAL SECTION

NTS

PREPARED BY:
ARDURRA
3737 BIRCH STREET, SUITE 250
NEWPORT BEACH, CA 92660
P: 949.428.1500 F: 949.258.5053

REGISTERED PROFESSIONAL ENGINEER
JOSE L. HERNANDEZ
NO. 68384
CIVIL
STATE OF CALIFORNIA

NO.	DATE	REVISIONS	BY
1			
2			
3			
4			

CITY OF LA HABRA

EUCLID STREET REHABILITATION PROJECT
WHITTIER BLVD TO NORTH CITY LIMITS PROJECT No. 1-R-21
TYPICAL SECTIONS

SUBMITTED BY:
JOSE HERNANDEZ, P.E., PROJECT ENGINEER
DATE 08/15/24

RECOMMENDED BY:
ANDREW N. LUNA, P.E., ASSOCIATE CIVIL ENGINEER
DATE 8/22/2024

DWG. NO. I-D-XXX

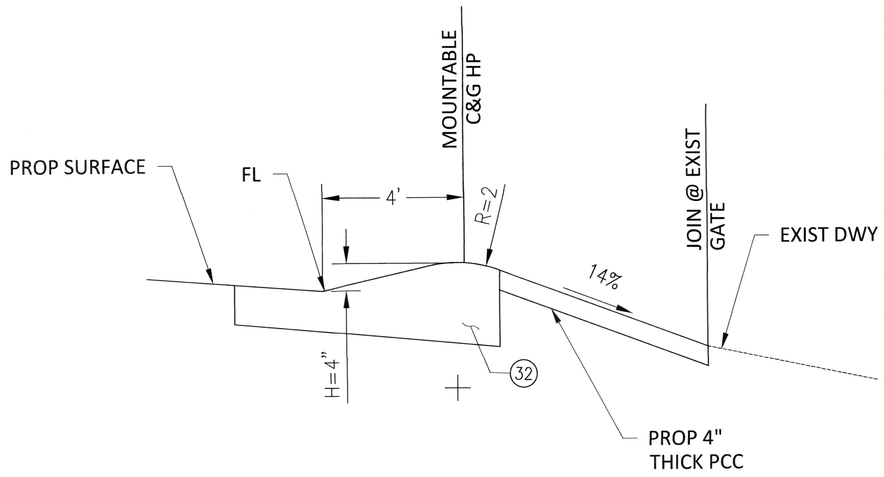

1 MODIFIED RESIDENTIAL DRIVEWAY DETAIL STA 17+66.76
NTS

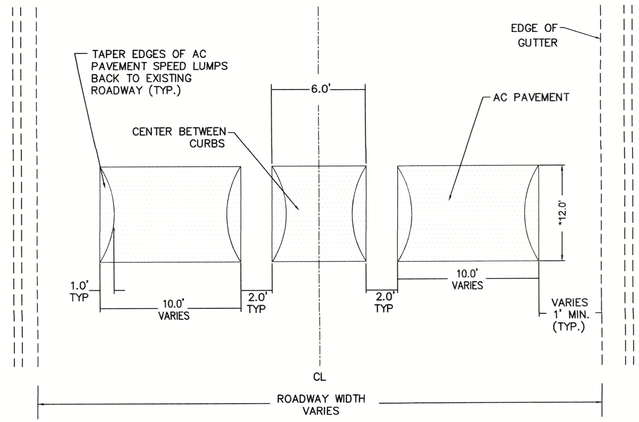

SPEED LUMP LAYOUT DETAIL
NTS
EXACT LOCATION TO BE DETERMINED BY THE ENGINEER AT THE TIME OF CONSTRUCTION
STRIPING PER SHEET 13

CONSTRUCTION NOTES

(32) REMOVE EXISTING AND CONSTRUCT 4" PCC RESIDENTIAL DRIVEWAY PER STD PLAN 110-2 TYPE A, INCLUDING MOUNTABLE PCC CURB & GUTTER PER DETAILS ON SHEET 4 OF 14

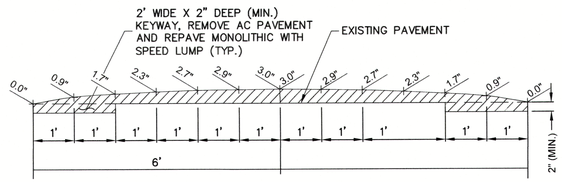

NOTE: KEYWAY TYPICAL ALL FOUR SIDES

PARABOLIC CROSS SECTION FOR AC PAVEMENT SPEED LUMP
NTS

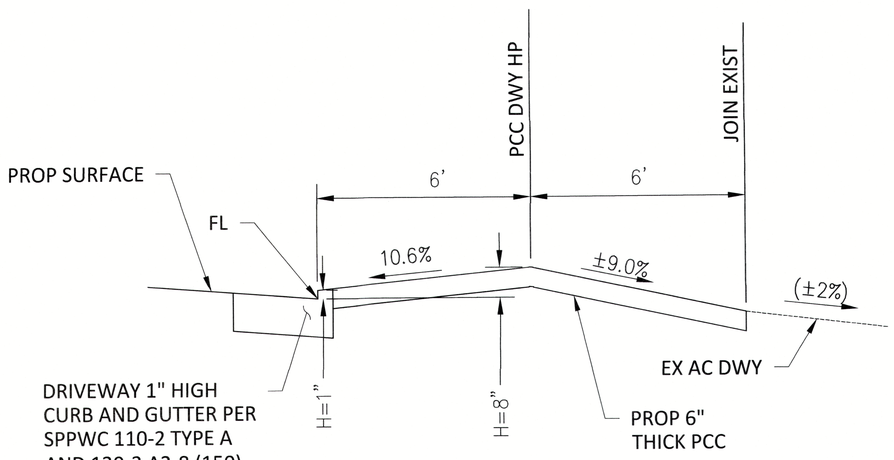

2 PCC DRIVEWAY APRROACH DETAIL STA 31+51.81
NTS

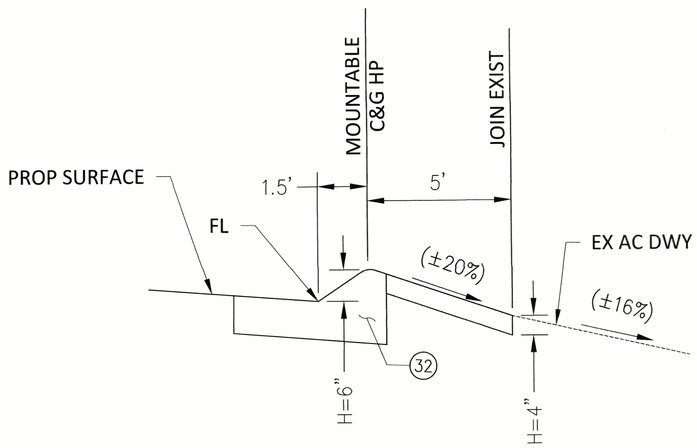

3 PCC DRIVEWAY APPROACH SECTION DETAIL STA 32+81.77
NTS

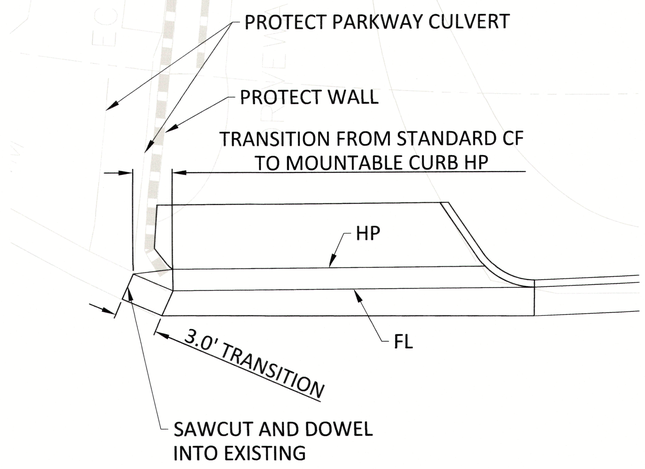

REV	DATE	DESCRIPTION	BY
1			
2			
3			
4			

CITY OF LA HABRA

EUCLID STREET REHABILITATION PROJECT
WHITTIER BLVD TO NORTH CITY LIMITS PROJECT No. 1-R-21

TYPICAL SECTIONS

PREPARED BY:
ARDURRA
3737 BIRCH STREET, SUITE 250
NEWPORT BEACH, CA 92660
P: 949.428.1500 F: 949.258.5053

REGISTERED PROFESSIONAL ENGINEER — JOSE L. HERNANDEZ — NO. 68384 — CIVIL — STATE OF CALIFORNIA

SUBMITTED BY:
JOSE HERNANDEZ, P.E., PROJECT ENGINEER
DATE 08/15/24

RECOMMENDED BY:
ANDREW N. LUNA, P.E., ASSOCIATE CIVIL ENGINEER
DATE 8/22/2024

DWG. NO. I-D-XXX

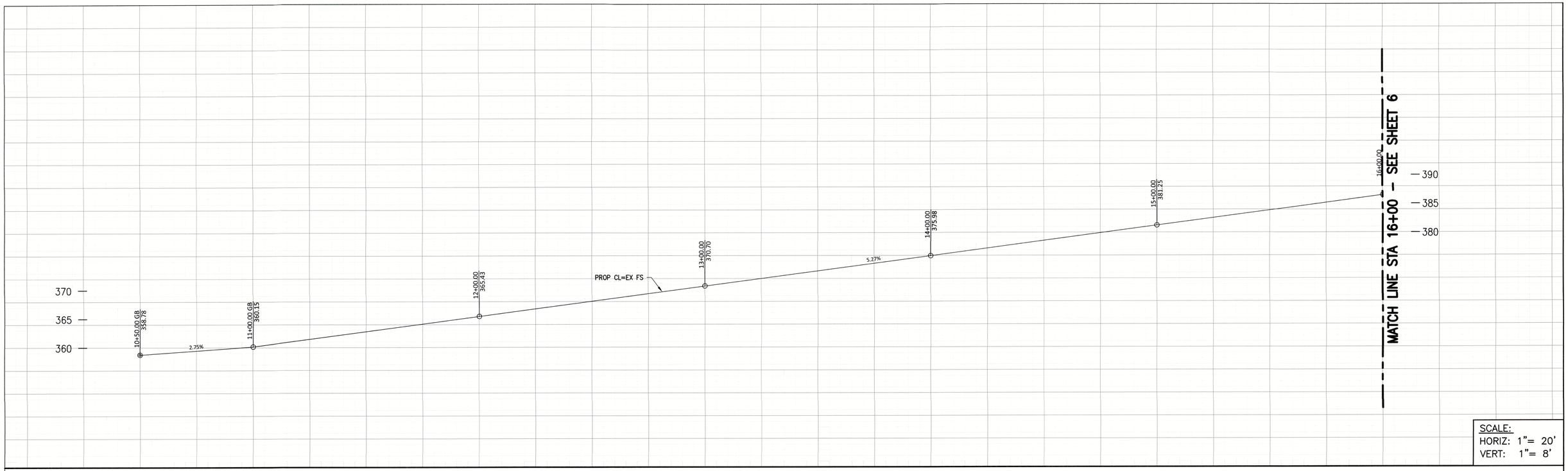

SCALE:
HORIZ: 1"= 20'
VERT: 1"= 8'

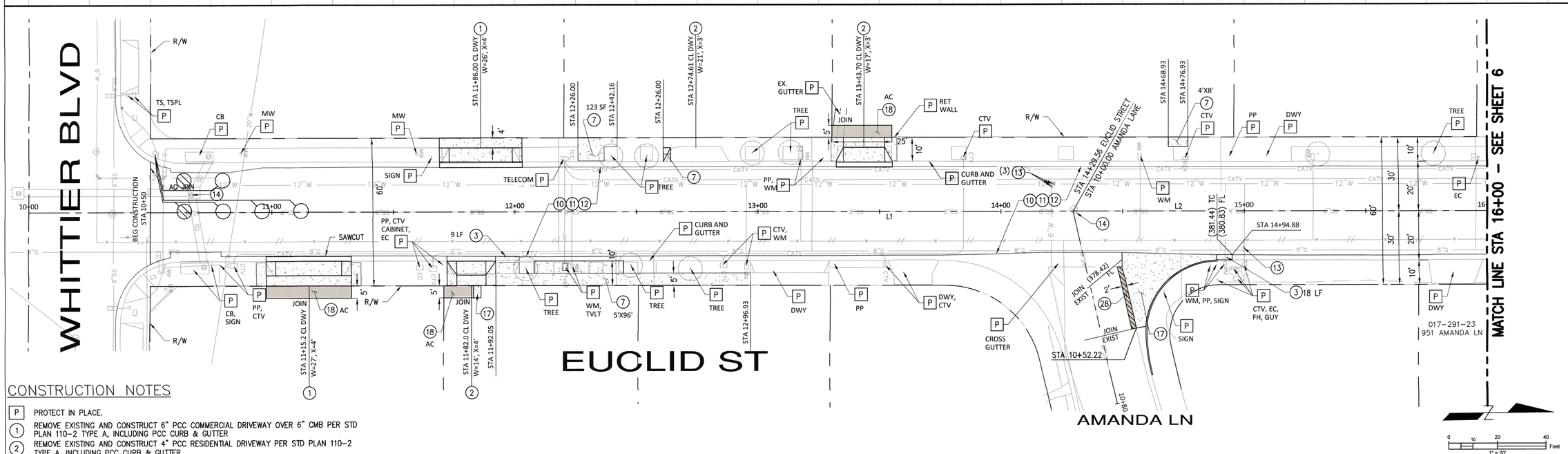

CONSTRUCTION NOTES

- (P) PROTECT IN PLACE.
- (1) REMOVE EXISTING AND CONSTRUCT 6" PCC COMMERCIAL DRIVEWAY OVER 6" CMB PER STD PLAN 110–2 TYPE A, INCLUDING PCC CURB & GUTTER
- (2) REMOVE EXISTING AND CONSTRUCT 4" PCC RESIDENTIAL DRIVEWAY PER STD PLAN 110–2 TYPE A, INCLUDING PCC CURB & GUTTER
- (3) REMOVE EXISTING AND CONSTRUCT 8" PCC CURB AND GUTTER OVER 6" CMB PER STD PLAN 120–3 TYPE A2–8
- (7) REMOVE EXISTING AND CONSTRUCT 4" PCC SIDEWALK PER STD PLAN 113–2
- (10) UNCLASSIFIED EXCAVATION AND DISPOSAL TO A DEPTH OF 9–1/2" BELOW FINISH GRADE
- (11) CONSTRUCT 7–1/2" ASPHALT CONCRETE BASE COURSE TYPE B PG 64–10
- (12) CONSTRUCT 2" ARHM–GG–C PG 64–16 PAVEMENT
- (13) ADJUST WATER VALVE FRAME AND COVER TO GRADE
- (14) ADJUST SEWER OR STORM DRAIN MANHOLE TO GRADE
- (17) SAWCUT AND REMOVE EXISTING PAVEMENT TO A DEPTH OF 6" BELOW FINISH GRADE. CONSTRUCT 6" PCC PAVEMENT
- (18) SAWCUT AND REMOVE EXISTING PAVEMENT TO A DEPTH OF 6" BELOW FINISH GRADE. CONSTRUCT 6" AC PAVEMENT
- (28) CONSTRUCT 6" ASPHALT CONCRETE BASE COURSE TYPE B PG 64–10

PARCEL LINE DATA

SEGMENT	LENGTH	DIRECTION
L1	429.56	S0° 37' 58"W
L2	916.36	N0° 37' 58"E

LEGEND

CONCRETE

NOTE:

DIMENSIONS FOR REMOVALS AS SHOWN ON PLAN ARE APPROXIMATE. FINAL REMOVAL LIMITS WILL BE DETERMINED IN THE FIELD

PREPARED BY:
ARDURRA
3737 BIRCH STREET, SUITE 250
NEWPORT BEACH, CA 92660
P: 949.428.1500 F: 949.258.5053

REGISTERED PROFESSIONAL ENGINEER
JOSE L. HERNANDEZ
NO. 68384
CIVIL
STATE OF CALIFORNIA

NO.	DATE	DESCRIPTION	BY
1			
2			
3			
4			

REVISIONS

CITY OF LA HABRA

EUCLID STREET REHABILITATION PROJECT
WHITTIER BLVD TO NORTH CITY LIMITS PROJECT No. 1-R-21
STREET IMPROVEMENT
WHITTIER BLVD TO STA 16+00

SUBMITTED BY:
JOSE HERNANDEZ, P.E., PROJECT ENGINEER
DATE 08/15/24

RECOMMENDED BY:
ANDREW N. LUNA, P.E., ASSOCIATE CIVIL ENGINEER
DATE 8/22/2024

DWG. NO. I-D-XXX

SHEET 5 OF 14

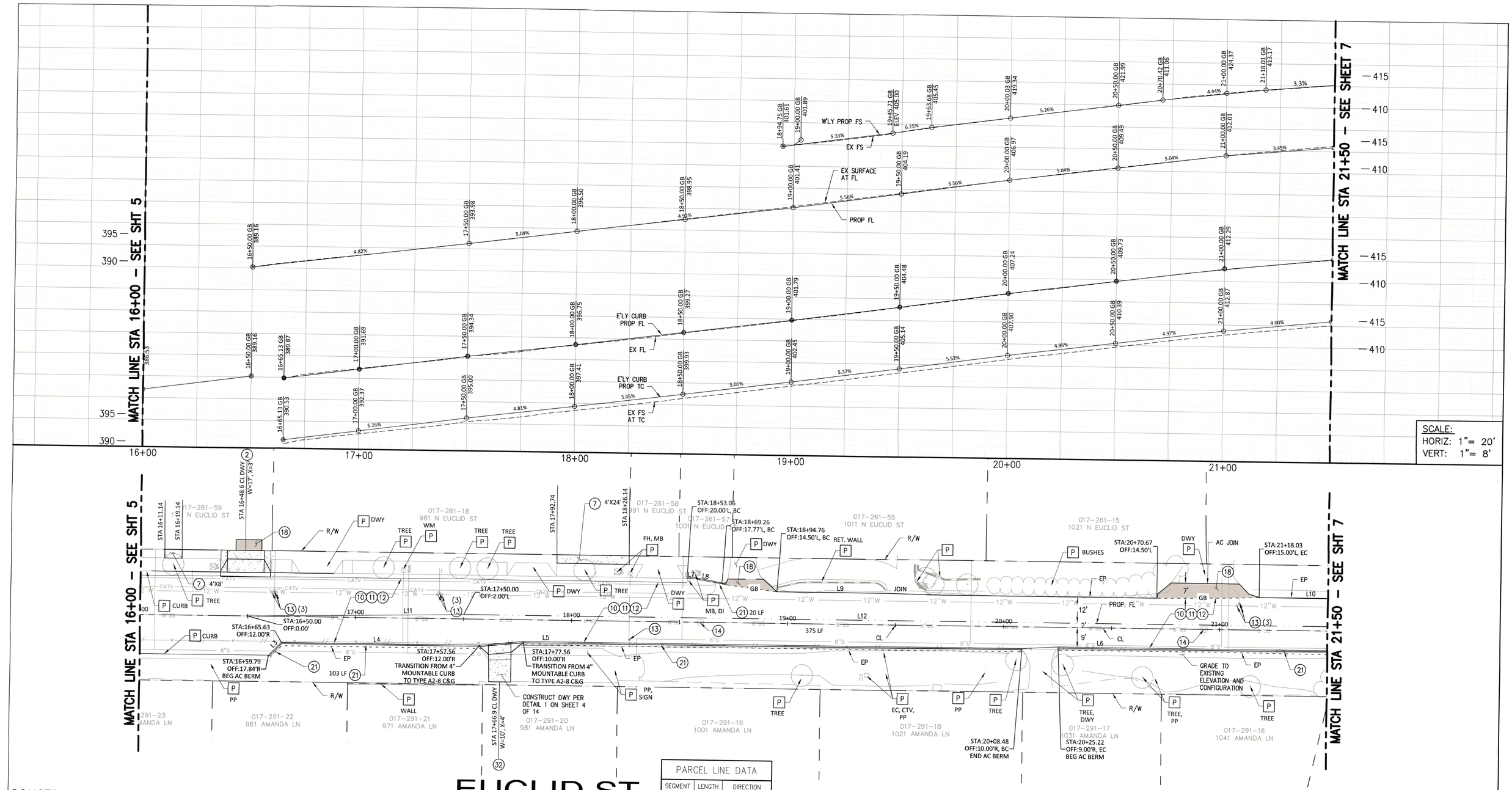

SCALE:
HORIZ: 1"= 20'
VERT: 1"= 8'

CONSTRUCTION NOTES

- P PROTECT IN PLACE.
- (2) REMOVE EXISTING AND CONSTRUCT 4" PCC RESIDENTIAL DRIVEWAY PER STD PLAN 110-2 TYPE A, INCLUDING PCC CURB & GUTTER
- (3) REMOVE EXISTING AND CONSTRUCT 8" PCC CURB AND GUTTER OVER 6" CMB PER STD PLAN 120-3 TYPE A2-8
- (7) REMOVE EXISTING AND CONSTRUCT 4" PCC SIDEWALK PER STD PLAN 113-2
- (10) UNCLASSIFIED EXCAVATION AND DISPOSAL TO A DEPTH OF 9-1/2" BELOW FINISH GRADE
- (11) CONSTRUCT 7-1/2" ASPHALT CONCRETE BASE COURSE TYPE B PG 64-10
- (12) CONSTRUCT 2" ARHM-GG-C PG 64-16 PAVEMENT
- (13) ADJUST WATER VALVE FRAME AND COVER TO GRADE
- (14) ADJUST SEWER OR STORM DRAIN MANHOLE TO GRADE
- (18) SAWCUT AND REMOVE EXISTING PAVEMENT TO A DEPTH OF 6" BELOW FINISH GRADE. CONSTRUCT 6" AC PAVEMENT
- (21) CONSTRUCT AC BERM PER STD PLAN 120-3 TYPE D1-8
- (32) REMOVE EXISTING AND CONSTRUCT 4" PCC RESIDENTIAL DRIVEWAY PER STD PLAN 110-2 TYPE A, INCLUDING MOUNTABLE PCC CURB & GUTTER PER DETAILS ON SHEET 4 OF 14

LEGEND

- NATIVE GROUND
- CONCRETE
- FULL DEPTH AC (PRIVATE)
- COLD MILL

PARCEL LINE DATA

SEGMENT	LENGTH	DIRECTION
L2	916.36	N0° 37' 58"E
L3	8.27	N44° 22' 02"W
L4	91.93	N0° 37' 58"E
L5	230.93	N0° 37' 58"E
L6	209.56	N0° 37' 58"E
L7	4.00	N0° 37' 58"E
L8	14.48	N10° 58' 18"E
L9	51.21	N0° 37' 58"E
L10	228.24	N0° 37' 58"E
L11	100.02	N0° 30' 47"W
L12	525.00	N0° 37' 58"E

NOTE:

DIMENSIONS FOR REMOVALS AS SHOWN ON PLAN ARE APPROXIMATE. FINAL REMOVAL LIMITS WILL BE DETERMINED IN THE FIELD

0 10 20 40 Feet
1" = 20'

REV	DATE	DESCRIPTION	BY
4			
3			
2			
1			

REVISIONS

CITY OF LA HABRA

EUCLID STREET REHABILITATION PROJECT
WHITTIER BLVD TO NORTH CITY LIMITS PROJECT No. 1-R-21
STREET IMPROVEMENT
STA 16+00 TO STA 21+50

PREPARED BY:
ARDURRA
3737 BIRCH STREET, SUITE 250
NEWPORT BEACH, CA 92660
P: 949.428.1500 F: 949.258.5053

REGISTERED PROFESSIONAL ENGINEER JOSE L. HERNANDEZ NO. 68384 CIVIL STATE OF CALIFORNIA

SUBMITTED BY:
JOSE HERNANDEZ, P.E., PROJECT ENGINEER
DATE 08/15/24

RECOMMENDED BY:
ANDREW N. LUNA, P.E., ASSOCIATE CIVIL ENGINEER
DATE 8/27/2024

DWG. NO. I-D-XXX

SHEET 6 OF 14

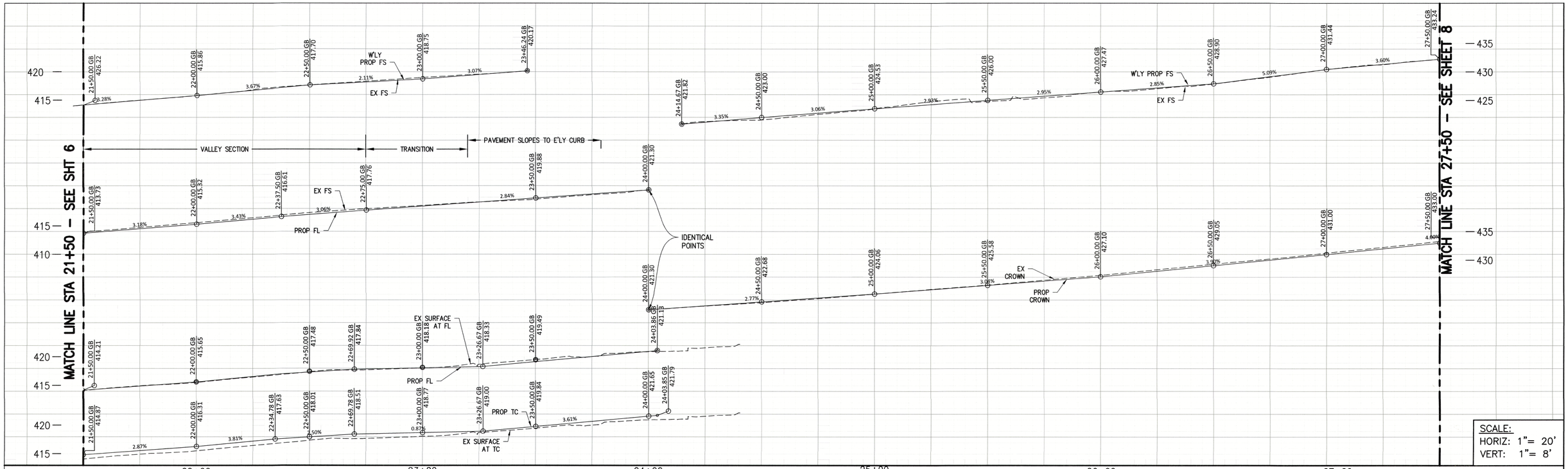

SCALE:
HORIZ: 1"= 20'
VERT: 1"= 8'

WIATT WAY

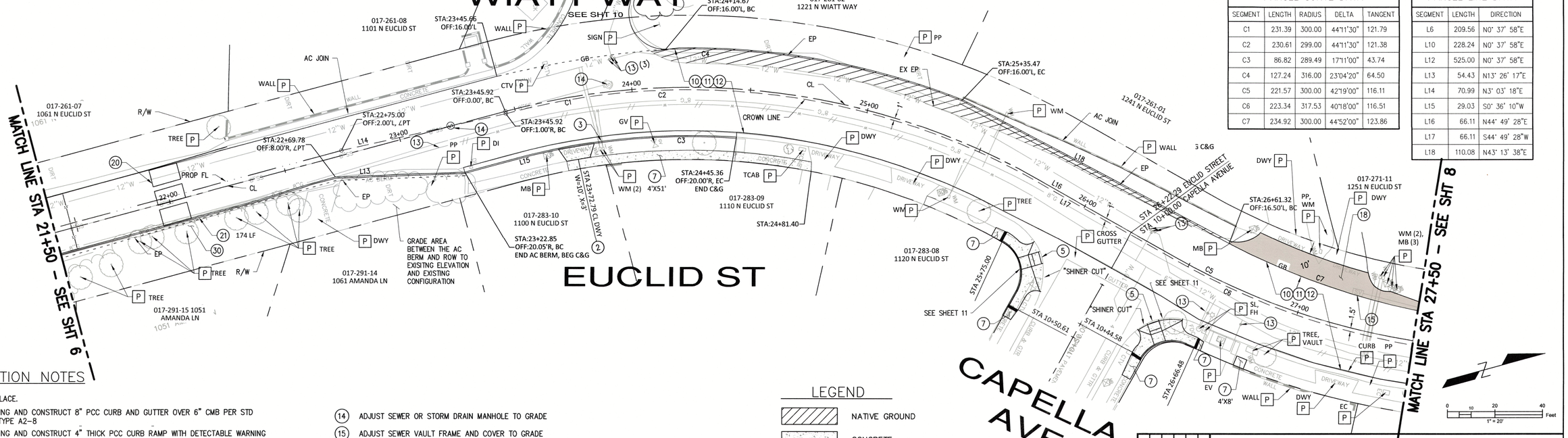

CONSTRUCTION NOTES

- (P) PROTECT IN PLACE.
- (3) REMOVE EXISTING AND CONSTRUCT 8" PCC CURB AND GUTTER OVER 6" CMB PER STD PLAN 120-3 TYPE A2-8
- (5) REMOVE EXISTING AND CONSTRUCT 4" THICK PCC CURB RAMP WITH DETECTABLE WARNING SURFACE INCLUDING PCC CURB & GUTTER PER CALTRANS REVISED STANDARD PLANS A88A (2018), CASE A.
- (7) REMOVE EXISTING AND CONSTRUCT 4" PCC SIDEWALK PER STD PLAN 113-2
- (9) REMOVE EXISTING AND CONSTRUCT 18" RCP STORM DRAIN PIPE
- (10) UNCLASSIFIED EXCAVATION AND DISPOSAL TO A DEPTH OF 9-1/2" BELOW FINISH GRADE
- (11) CONSTRUCT 7-1/2" ASPHALT CONCRETE BASE COURSE TYPE B PG 64-10
- (12) CONSTRUCT 2" ARHM-GG-C PG 64-16 PAVEMENT
- (13) ADJUST WATER VALVE FRAME AND COVER TO GRADE
- (14) ADJUST SEWER OR STORM DRAIN MANHOLE TO GRADE
- (15) ADJUST SEWER VAULT FRAME AND COVER TO GRADE
- (16) ADJUST SURVEY MONUMENT AND MONITORING WELL FRAME AND COVER TO GRADE
- (18) SAWCUT AND REMOVE EXISTING PAVEMENT TO A DEPTH OF 6" BELOW FINISH GRADE. CONSTRUCT 6" AC PAVEMENT
- (20) CONSTRUCT SPEED LUMP PER PLAN DETAIL ON SHEET 4 OF 13
- (21) CONSTRUCT AC BERM PER STD PLAN 120-3 TYPE D1-8
- (30) PROTECT IN PLACE OR REMOVE + REINSTALL EX. POSTS AND BARRIER TO SAME ELEVATION AS EXISTING. REPLACE BOARDS AS NEEDED WITH PRESSURE TREATED DOUGLAS LUMBER.

LEGEND

- NATIVE GROUND
- CONCRETE
- FULL DEPTH AC (PRIVATE)

NOTE:

DIMENSIONS FOR REMOVALS AS SHOWN ON PLAN ARE APPROXIMATE. FINAL REMOVAL LIMITS WILL BE DETERMINED IN THE FIELD

PARCEL CURVE DATA				
SEGMENT	LENGTH	RADIUS	DELTA	TANGENT
C1	231.39	300.00	44°11'30"	121.79
C2	230.61	299.00	44°11'30"	121.38
C3	86.82	289.49	17°11'00"	43.74
C4	127.24	316.00	23°04'20"	64.50
C5	221.57	300.00	42°19'00"	116.11
C6	223.34	317.53	40°18'00"	116.51
C7	234.92	300.00	44°52'00"	123.86

PARCEL LINE DATA		
SEGMENT	LENGTH	DIRECTION
L6	209.56	N0° 37' 58"E
L10	228.24	N0° 37' 58"E
L12	525.00	N0° 37' 58"E
L13	54.43	N13° 26' 17"E
L14	70.99	N3° 03' 18"E
L15	29.03	S0° 36' 10"W
L16	66.11	N44° 49' 28"E
L17	66.11	S44° 49' 28"W
L18	110.08	N43° 13' 38"E

NO.	DATE	DESCRIPTION	BY
4			
3			
2			
1			

REVISIONS

CITY OF LA HABRA

EUCLID STREET REHABILITATION PROJECT
WHITTIER BLVD TO NORTH CITY LIMITS PROJECT No. 1-R-21
STREET IMPROVEMENT
STA 21+50 TO STA 27+50

PREPARED BY:
ARDURRA
3737 BIRCH STREET, SUITE 250
NEWPORT BEACH, CA 92660
P: 949.428.1500 F: 949.258.5053

RECOMMENDED FOR CONSTRUCTION
JOSE L. HERNANDEZ
NO. 68384
CIVIL
STATE OF CALIFORNIA

SUBMITTED BY:
JOSE HERNANDEZ, P.E., PROJECT ENGINEER
DATE 08/15/24

RECOMMENDED BY:
ANDREW N. LUNA, P.E., ASSOCIATE CIVIL ENGINEER
DATE 8/22/2024

DWG. NO. I-D-XXX

SHEET 7 OF 14

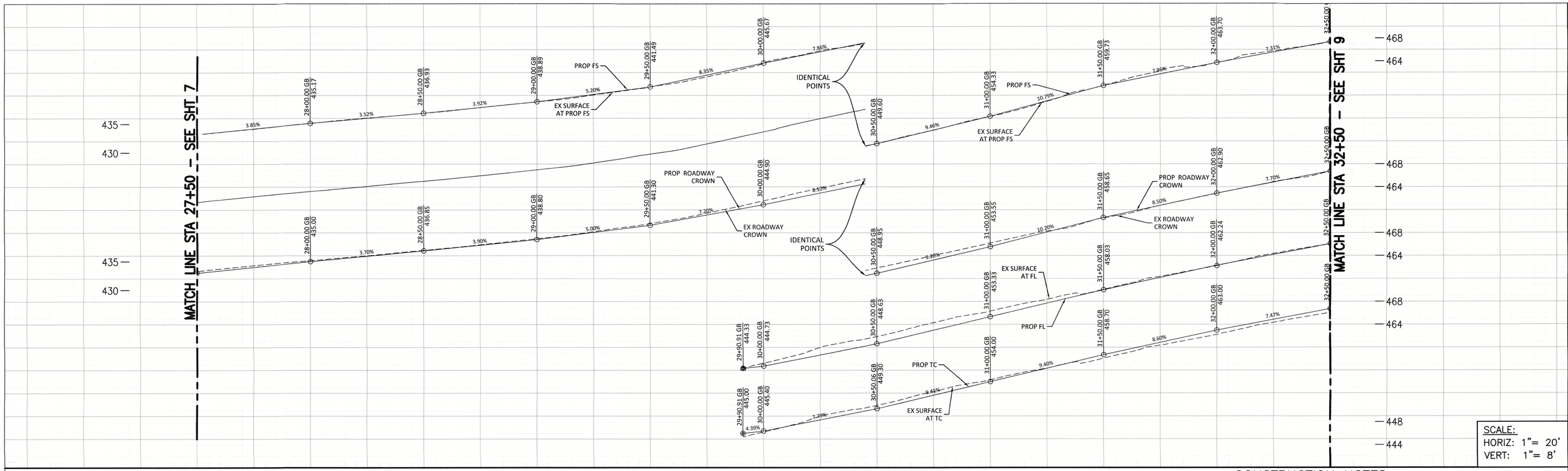

SCALE:
HORIZ: 1"= 20'
VERT: 1"= 8'

PARCEL CURVE DATA				
SEGMENT	LENGTH	RADIUS	DELTA	TANGENT
C5	221.57	300.00	42°19'00"	116.11
C6	223.34	317.53	40°18'00"	116.51
C7	234.92	300.00	44°52'00"	123.86
C8	171.79	289.00	34°03'30"	88.52
C9	214.33	300.00	40°56'00"	111.97
C10	216.00	350.71	35°17'20"	111.55
C11	32.65	101.78	18°22'50"	16.47
C12	117.73	313.00	21°33'00"	59.57
C13	97.77	574.25	9°45'20"	49.01
C14	137.89	600.05	13°10'00"	69.25
C15	118.07	300.00	22°33'00"	59.81
C16	117.51	301.00	22°22'00"	59.51

PARCEL LINE DATA		
SEGMENT	LENGTH	DIRECTION
L19	88.41	N2° 30' 28"E
L20	88.41	N2° 30' 28"E
L21	66.27	N1° 04' 51"W
L22	30.86	N32° 43' 02"W
L23	22.48	N38° 25' 11"W
L24	22.48	N38° 25' 11"W

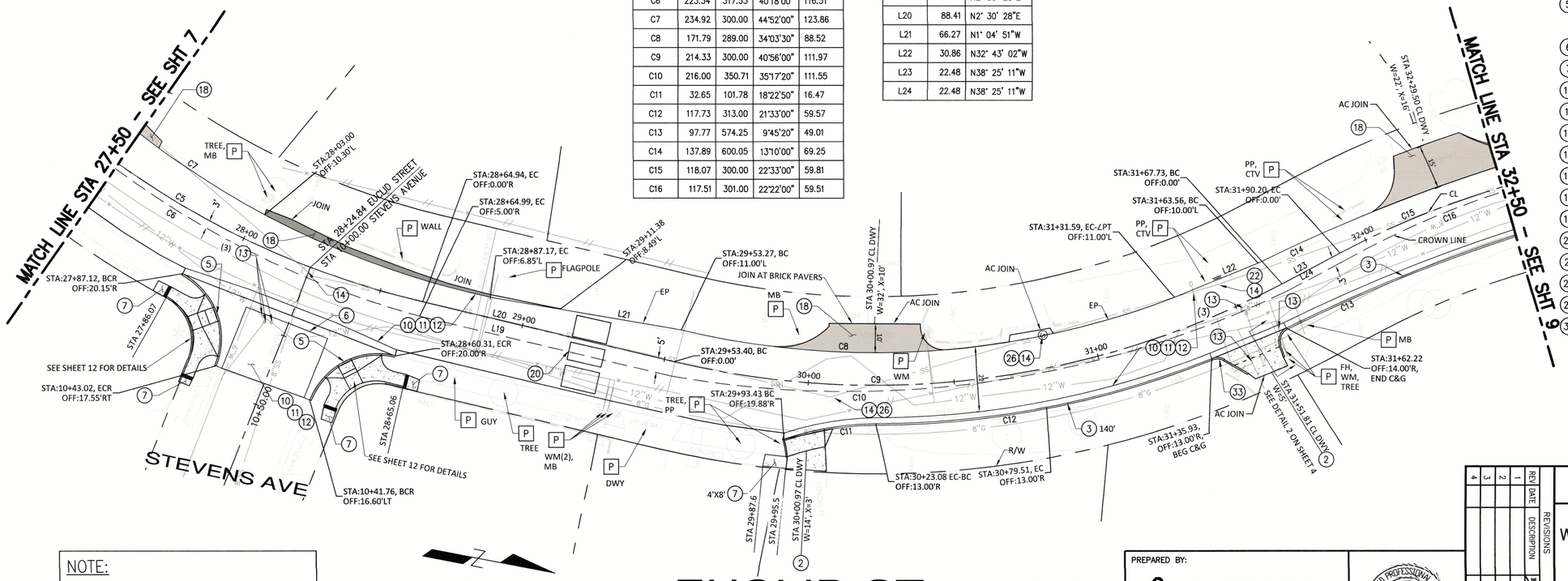

CONSTRUCTION NOTES

- (P) PROTECT IN PLACE.
- (2) REMOVE EXISTING AND CONSTRUCT 4" PCC RESIDENTIAL DRIVEWAY PER STD PLAN 110–2 TYPE A, INCLUDING PCC CURB & GUTTER
- (3) REMOVE EXISTING AND CONSTRUCT 8" PCC CURB AND GUTTER OVER 6" CMB PER STD PLAN 120–3 TYPE A2–8
- (5) REMOVE EXISTING AND CONSTRUCT 4" THICK PCC CURB RAMP WITH DETECTABLE WARNING SURFACE INCLUDING PCC CURB & GUTTER PER CALTRANS REVISED STANDARD PLANS A88A (2018), CASE A.
- (6) REMOVE EXISTING AND CONSTRUCT 8" PCC CROSS GUTTER AND/OR SPANDREL OVER 6" CMB PER STD PLAN 122–3.
- (7) REMOVE EXISTING AND CONSTRUCT 4" PCC SIDEWALK PER STD PLAN 113–2
- (10) UNCLASSIFIED EXCAVATION AND DISPOSAL TO A DEPTH OF 9–1/2" BELOW FINISH GRADE
- (11) CONSTRUCT 7–1/2" ASPHALT CONCRETE BASE COURSE TYPE B PG 64–10
- (12) CONSTRUCT 2" ARHM–GG–C PG 64–16 PAVEMENT
- (13) ADJUST WATER VALVE FRAME AND COVER TO GRADE
- (14) ADJUST SEWER OR STORM DRAIN MANHOLE TO GRADE
- (17) SAWCUT AND REMOVE EXISTING PAVEMENT TO A DEPTH OF 6" BELOW FINISH GRADE. CONSTRUCT 6" PCC PAVEMENT
- (18) SAWCUT AND REMOVE EXISTING PAVEMENT TO A DEPTH OF 6" BELOW FINISH GRADE. CONSTRUCT 6" AC PAVEMENT
- (20) CONSTRUCT SPEED LUMP PER PLAN DETAIL ON SHEET 4 OF 13
- (21) CONSTRUCT AC BERM PER STD PLAN 120–3 TYPE D1–8
- (22) EXCAVATE AND ROTATE SEWER MANHOLE ECCENTRIC CONE TO CLEAR CURB AND RECONSTRUCT MANHOLE TO GRADE
- (26) REMOVE EXISTING AND INSTALL NEW MANHOLE COVER MARKED "SEWER".
- (33) REMOVE EXISTING AND CONSTRUCT 4" PCC CURB OVER 6" CMB PER STD PLAN 120–3 TYPE A1–8

LEGEND

- NATIVE GROUND
- CONCRETE
- FULL DEPTH AC (PRIVATE)

NOTE:

DIMENSIONS FOR REMOVALS AS SHOWN ON PLAN ARE APPROXIMATE. FINAL REMOVAL LIMITS WILL BE DETERMINED IN THE FIELD

0 10 20 40 Feet
1" = 20'

REVISIONS		
NO.	DATE	DESCRIPTION
1		
2		
3		
4		

CITY OF LA HABRA

EUCLID STREET REHABILITATION PROJECT
WHITTIER BLVD TO NORTH CITY LIMITS PROJECT No. 1-R-21
STREET IMPROVEMENT PLAN
STA 27+50 TO STA 32+50

PREPARED BY:
ARDURRA
3737 BIRCH STREET, SUITE 250
NEWPORT BEACH, CA 92660
P: 949.428.1500 F: 949.258.5053

REGISTERED PROFESSIONAL ENGINEER
JOSE L. HERNANDEZ
NO. 68384
CIVIL
STATE OF CALIFORNIA

SUBMITTED BY:
JOSE HERNANDEZ, P.E., PROJECT ENGINEER
DATE 08/15/24

RECOMMENDED BY:
ANDREW N. LUNA, P.E., ASSOCIATE CIVIL ENGINEER
DATE 8/22/24

DWG. NO. I-D-XXX
SHEET 8 OF 14

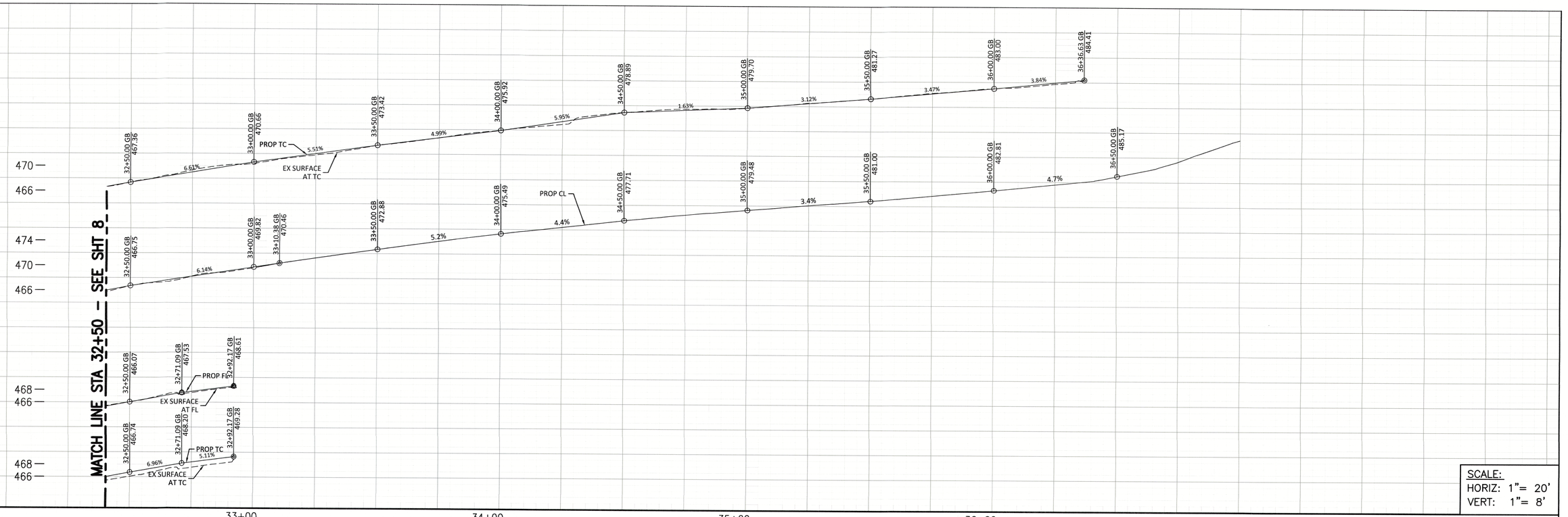

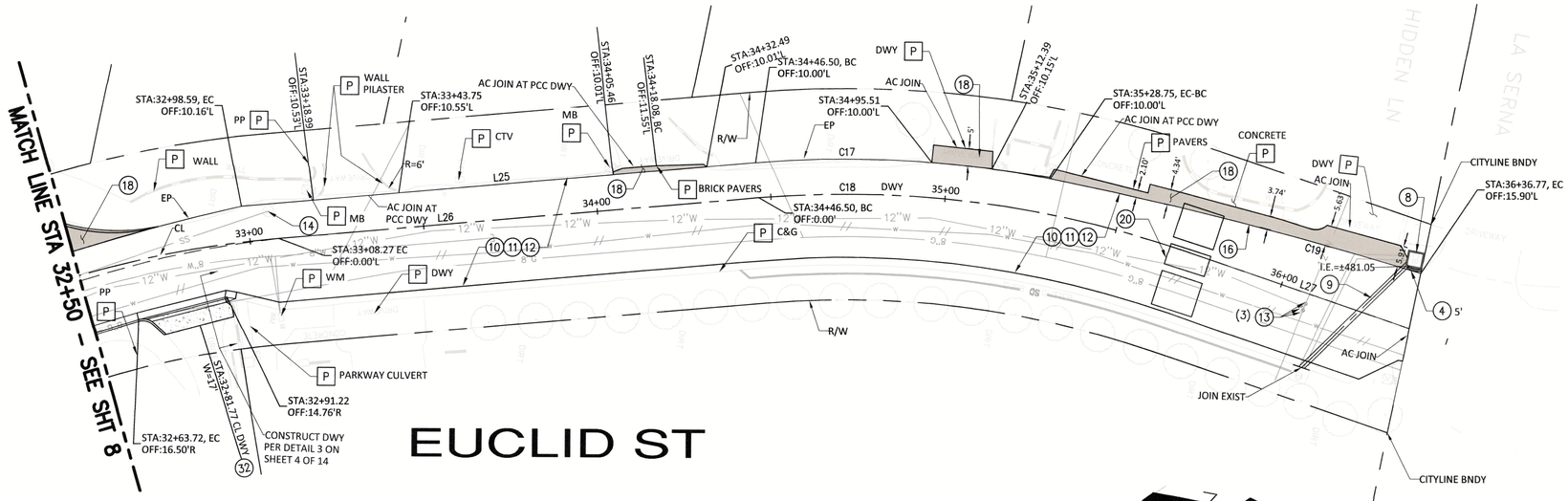

CONSTRUCTION NOTES

- P PROTECT IN PLACE.
- (4) REMOVE EXISTING AND CONSTRUCT 8" PCC CURB OVER 6" CMB PER STD PLAN 120–3 TYPE A1–8
- (8) REMOVE EXISTING AND CONSTRUCT 48" X 48" CALTRANS TYPE G2 DROP INLET.
- (9) REMOVE EXISTING AND CONSTRUCT 18" RCP STORM DRAIN PIPE
- (10) UNCLASSIFIED EXCAVATION AND DISPOSAL TO A DEPTH OF 9–1/2" BELOW FINISH GRADE
- (11) CONSTRUCT 7–1/2" ASPHALT CONCRETE BASE COURSE TYPE B PG 64–10
- (12) CONSTRUCT 2" ARHM–GG–C PG 64–16 PAVEMENT
- (14) ADJUST SEWER OR STORM DRAIN MANHOLE TO GRADE
- (16) ADJUST SURVEY MONUMENT AND MONITORING WELL FRAME AND COVER TO GRADE
- (18) SAWCUT AND REMOVE EXISTING PAVEMENT TO A DEPTH OF 6" BELOW FINISH GRADE. CONSTRUCT 6" AC PAVEMENT
- (20) CONSTRUCT SPEED LUMP PER PLAN DETAIL ON SHEET 4 OF 13
- (32) REMOVE EXISTING AND CONSTRUCT 4" PCC RESIDENTIAL DRIVEWAY PER STD PLAN 110–2 TYPE A, INCLUDING MOUNTABLE PCC CURB & GUTTER PER DETAILS ON SHEET 4 OF 14

PARCEL CURVE DATA

SEGMENT	LENGTH	RADIUS	DELTA	TANGENT
C13	97.77	574.25	9°45'20"	49.01
C14	137.89	600.05	13°10'00"	69.25
C15	118.07	300.00	22°33'00"	59.81
C16	117.51	301.00	22°22'00"	59.51
C17	84.99	310.00	15°42'30"	42.76
C18	124.18	300.00	23°43'00"	62.99
C19	109.69	1167.98	5°22'50"	54.88

PARCEL LINE DATA

SEGMENT	LENGTH	DIRECTION
L25	109.50	N15° 52' 32"W
L26	138.23	N15° 52' 32"W
L27	68.04	N7° 50' 26"E

PREPARED BY:
ARDURRA
3737 BIRCH STREET, SUITE 250
NEWPORT BEACH, CA 92660
P: 949.428.1500 F: 949.258.5053

REGISTERED PROFESSIONAL ENGINEER JOSE L. HERNANDEZ NO. 68384 CIVIL STATE OF CALIFORNIA

NO.	DATE	DESCRIPTION	BY
1			
2			
3			
4			

REVISIONS

CITY OF LA HABRA

EUCLID STREET REHABILITATION PROJECT
WHITTIER BLVD TO NORTH CITY LIMITS PROJECT No. 1-R-21
STREET IMPROVEMENT PLAN
STA STA 32+50 TO N'LY CITY LIMITS

SUBMITTED BY:
JOSE HERNANDEZ, P.E., PROJECT ENGINEER
DATE 08/15/24

RECOMMENDED BY:
ANDREW N. LUNA, P.E., ASSOCIATE CIVIL ENGINEER
DATE 8/22/2024

DWG. NO. I-D-XXX

SHEET 9 OF 14

CONSTRUCTION NOTES

- [P] PROTECT IN PLACE.
- (13) ADJUST WATER VALVE FRAME AND COVER TO GRADE
- (14) ADJUST SEWER OR STORM DRAIN MANHOLE TO GRADE
- (27) UNCLASSIFIED EXCAVATION AND DISPOSAL TO A DEPTH OF 8" BELOW FINISH GRADE
- (28) CONSTRUCT 6" ASPHALT CONCRETE BASE COURSE TYPE B PG 64-10
- (29) CONSTRUCT 2" ARHM-GG-C PG 64-16 PAVEMENT

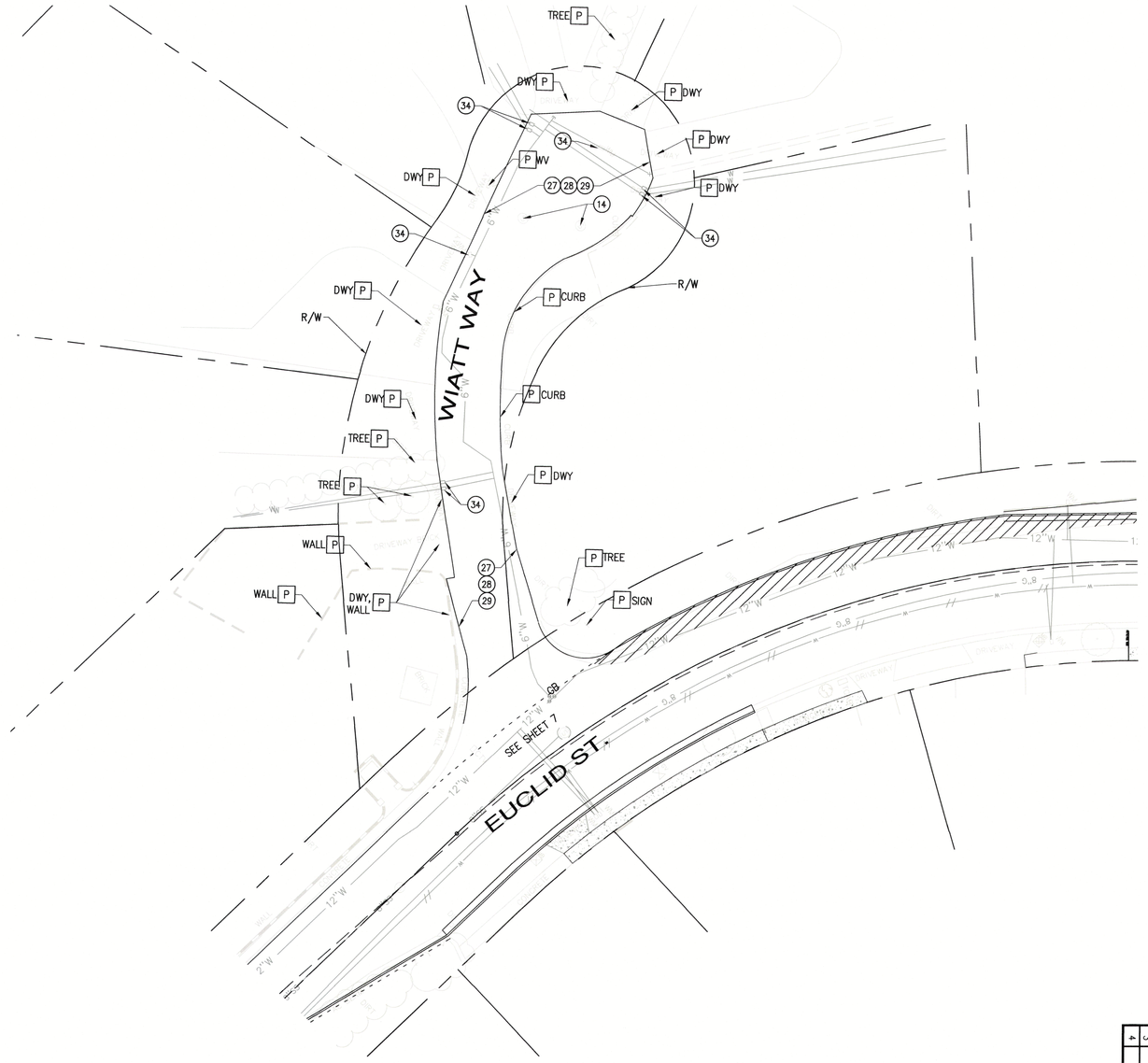

LEGEND

- NATIVE GROUND
- CONCRETE
- FULL DEPTH AC (PRIVATE)

NOTE:

DIMENSIONS FOR REMOVALS AS SHOWN ON PLAN ARE APPROXIMATE. FINAL REMOVAL LIMITS WILL BE DETERMINED IN THE FIELD

PREPARED BY:

ARDURRA

3737 BIRCH STREET, SUITE 250
NEWPORT BEACH, CA 92660
P: 949.428.1500 F: 949.258.5053

REGISTERED PROFESSIONAL ENGINEER
JOSE L. HERNANDEZ
NO. 68384
CIVIL
STATE OF CALIFORNIA

REV	DATE	DESCRIPTION	BY
4			
3			
2			
1			

REVISIONS

CITY OF LA HABRA

EUCLID STREET REHABILITATION PROJECT
WHITTIER BLVD TO NORTH CITY LIMITS PROJECT No. 1-R-21
WIATT WAY REHABILITAION

SUBMITTED BY:
JOSE HERNANDEZ, P.E., PROJECT ENGINEER
DATE 08/15/24

RECOMMENDED BY:
ANDREW N. LUNA, P.E., ASSOCIATE CIVIL ENGINEER
DATE 8/22/2024

DWG. NO. I-D-XXX

SHEET 10 OF 14

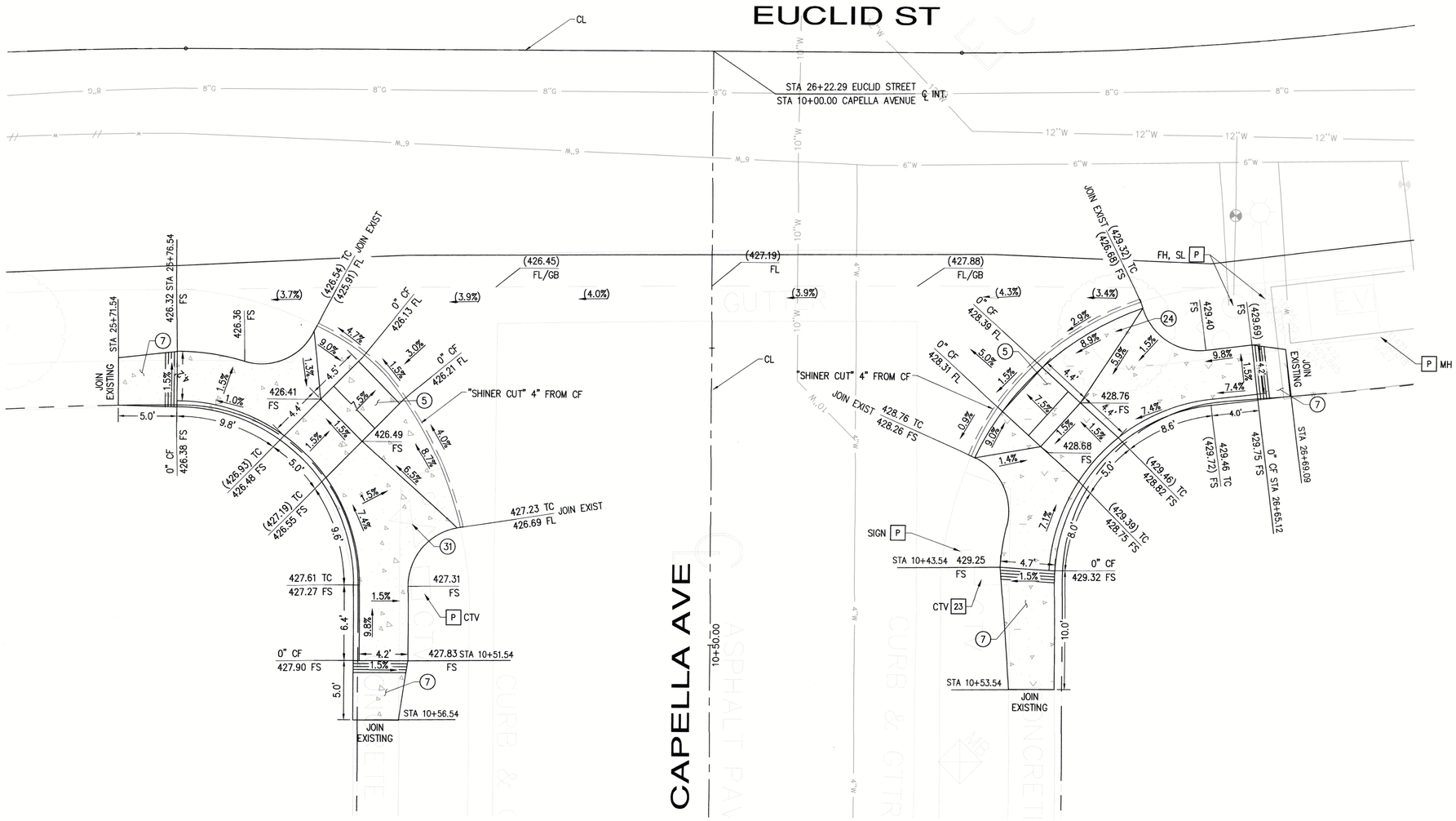

CONSTRUCTION NOTES

- P — PROTECT IN PLACE.
- (5) — REMOVE EXISTING AND CONSTRUCT 4" THICK PCC CURB RAMP WITH DETECTABLE WARNING SURFACE INCLUDING PCC CURB & GUTTER PER CALTRANS REVISED STANDARD PLANS A88A (2018), CASE A.
- (7) — REMOVE EXISTING AND CONSTRUCT 4" PCC SIDEWALK PER STD PLAN 113-2
- (23) — ADJUST PULL BOX TO GRADE BY OTHERS
- (24) — REMOVE EXISTING TREE.
- (31) — ADJUST GAS VALVE TO GRADE BY SO CAL GAS. CONTRACTOR TO COORDINATE.

LEGEND

CONCRETE

N

0 2.5 5 10 Feet
1" = 5'

NOTE:

DIMENSIONS FOR REMOVALS AS SHOWN ON PLAN ARE APPROXIMATE. FINAL REMOVAL LIMITS WILL BE DETERMINED IN THE FIELD

PREPARED BY:
ARDURRA
3737 BIRCH STREET, SUITE 250
NEWPORT BEACH, CA 92660
P: 949.428.1500 F: 949.258.5053

REGISTERED PROFESSIONAL ENGINEER — JOSE L. HERNANDEZ — NO. 68384 — CIVIL — STATE OF CALIFORNIA

NO.	DATE	DESCRIPTION	BY
1			
2			
3			
4			

REVISIONS

CITY OF LA HABRA

EUCLID STREET REHABILITATION PROJECT
WHITTIER BLVD TO NORTH CITY LIMITS PROJECT No. 1-R-21
RAMP DETAILS

SUBMITTED BY:
JOSE HERNANDEZ, P.E., PROJECT ENGINEER
DATE 08/15/24

RECOMMENDED BY:
ANDREW N. LUNA, P.E., ASSOCIATE CIVIL ENGINEER
DATE 8/22/2024

DWG. NO. I-D-XXX

SHEET 11 OF 14

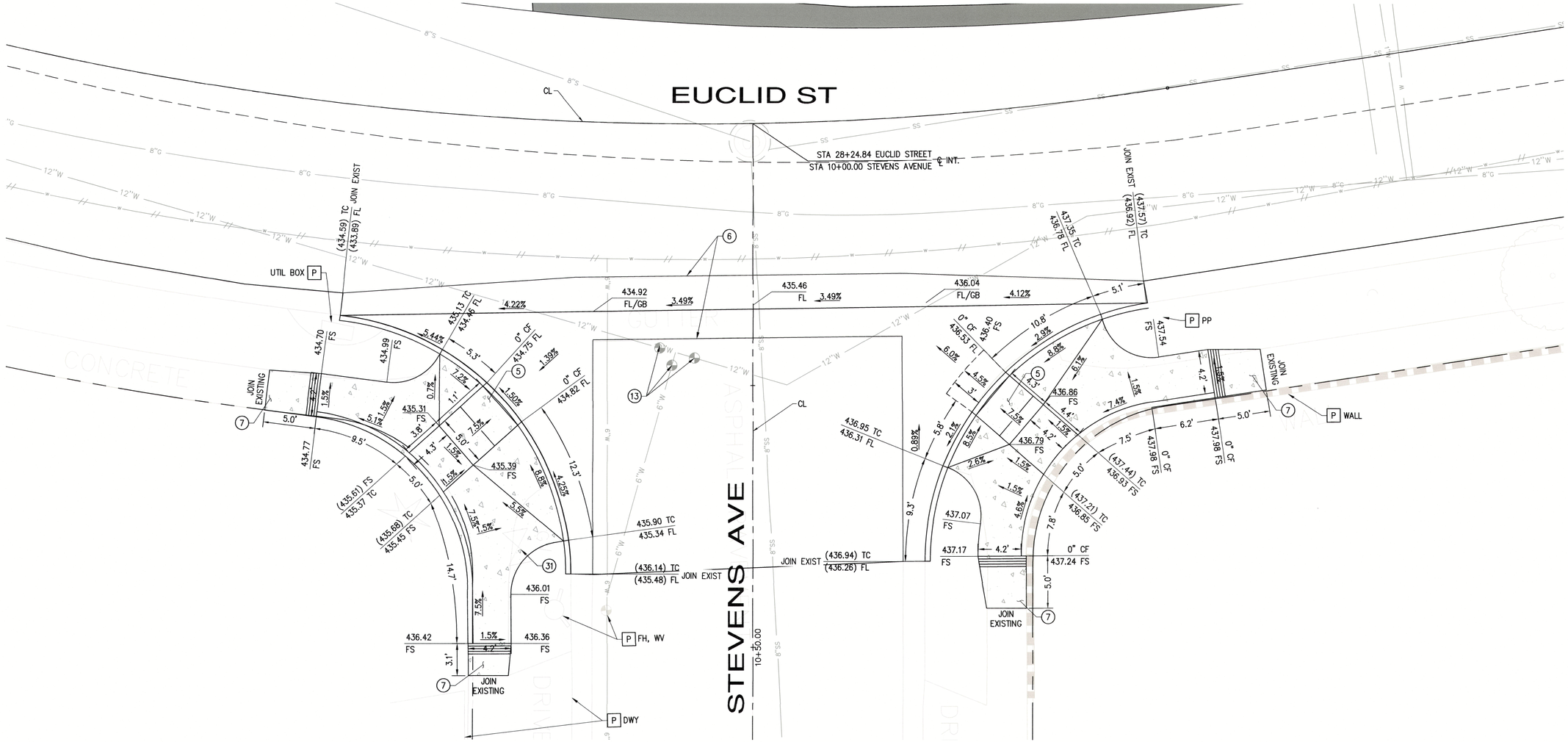

CONSTRUCTION NOTES

- (P) PROTECT IN PLACE.
- (5) REMOVE EXISTING AND CONSTRUCT 4" THICK PCC CURB RAMP WITH DETECTABLE WARNING SURFACE INCLUDING PCC CURB & GUTTER PER CALTRANS REVISED STANDARD PLANS A88A (2018), CASE A.
- (6) REMOVE EXISTING AND CONSTRUCT 8" PCC CROSS GUTTER AND/OR SPANDREL OVER 6" CMB PER STD PLAN 122-3.
- (7) REMOVE EXISTING AND CONSTRUCT 4" PCC SIDEWALK PER STD PLAN 113-2
- (13) ADJUST WATER VALVE FRAME AND COVER TO GRADE
- (31) ADJUST GAS VALVE TO GRADE BY SO CAL GAS. CONTRACTOR TO COORDINATE.

LEGEND

CONCRETE

NOTE:

DIMENSIONS FOR REMOVALS AS SHOWN ON PLAN ARE APPROXIMATE. FINAL REMOVAL LIMITS WILL BE DETERMINED IN THE FIELD

PREPARED BY:
ARDURRA
3737 BIRCH STREET, SUITE 250
NEWPORT BEACH, CA 92660
P: 949.428.1500 F: 949.258.5053

REGISTERED PROFESSIONAL ENGINEER
JOSE L. HERNANDEZ
NO. 68384
CIVIL
STATE OF CALIFORNIA

REVISIONS		
NO.	DESCRIPTION	DATE
1		
2		
3		
4		

CITY OF LA HABRA

EUCLID STREET REHABILITATION PROJECT
WHITTIER BLVD TO NORTH CITY LIMITS PROJECT No. 1-R-21
RAMP DETAILS

SUBMITTED BY:
JOSE HERNANDEZ, P.E., PROJECT ENGINEER
DATE 08/15/24

RECOMMENDED BY:
ANDREW N. LUNA, P.E., ASSOCIATE CIVIL ENGINEER
DATE 8/22/2024

DWG. NO. I-D-XXX

SHEET 12 OF 14

EUCLID ST

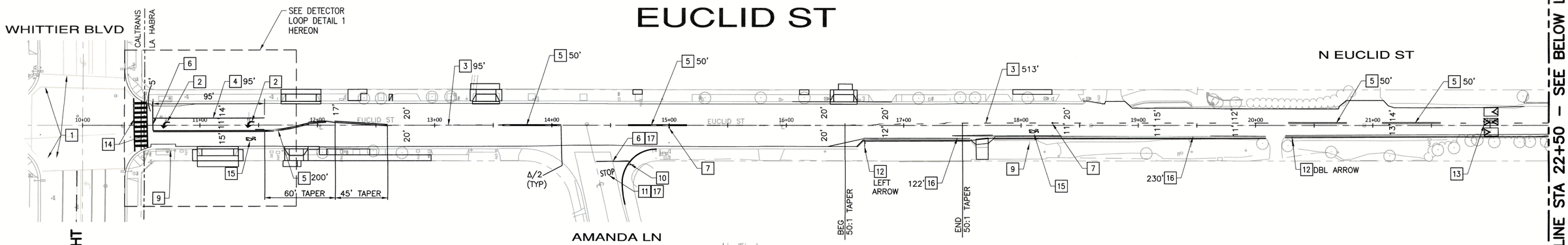

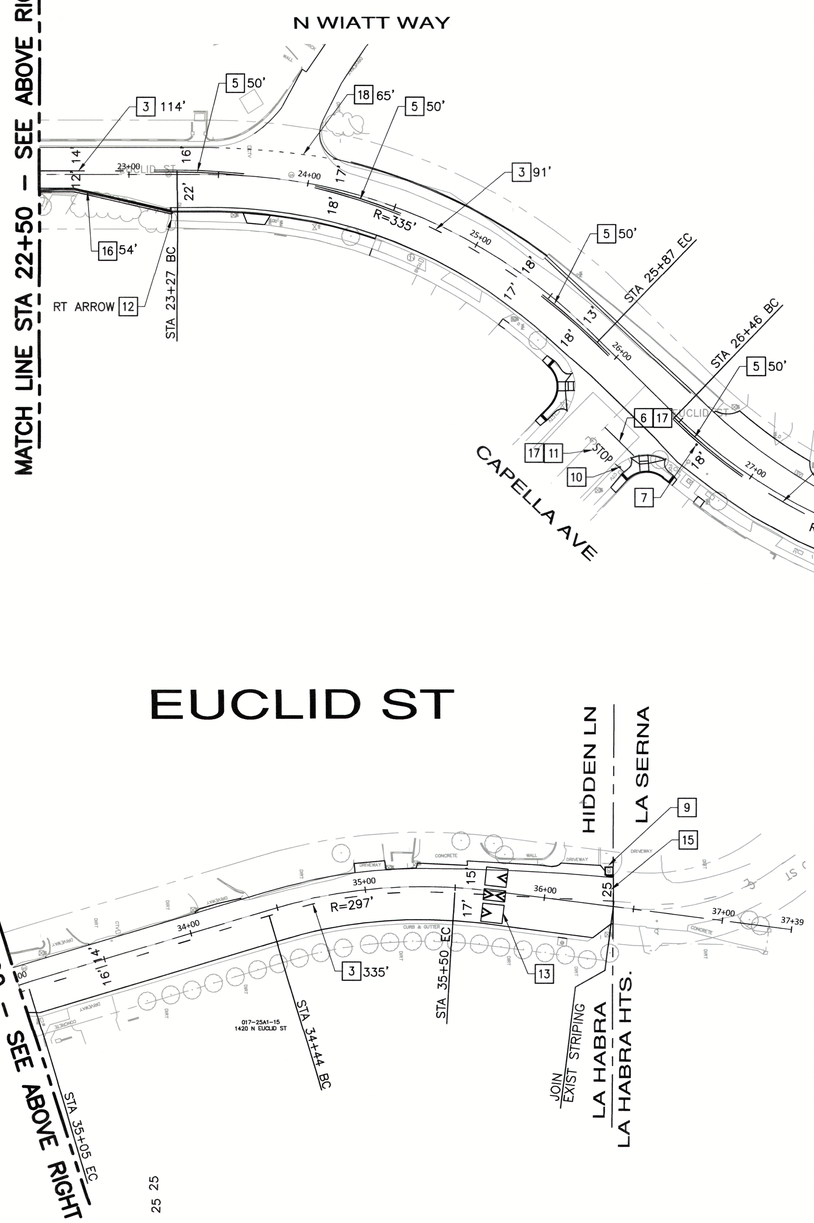

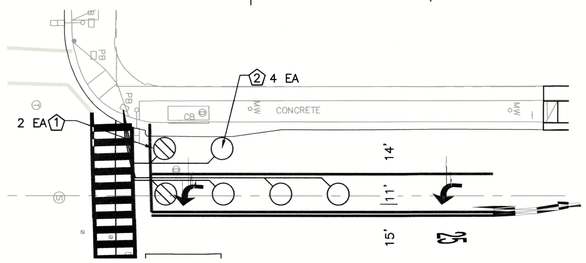

DETECTOR LOOP DETAIL 1

EUCLID ST

PAVEMENT LEGEND

25

SIGN LEGEND

ROAD NARROWS	SPEED LIMIT 25	NO STOPPING ANY TIME	STOP
W5-1	R2-1(25)	R25A(S)(CA)	R1-1

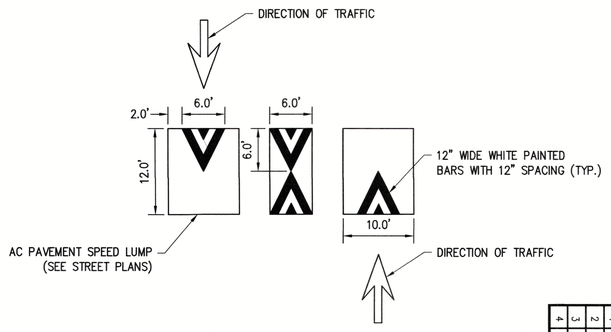

SPEED LUMP STRIPING DETAIL
NTS

STRIPING NOTES

1. PROTECT EXISTING STRIPING.
2. INSTALL TYPE IV (L) ARROW PER CALTRANS STANDARD PLAN A24A. (THERMOPLASTIC).
3. INSTALL 6" YELLOW CENTERLINE PER CALTRANS STANDARD PLAN A20A, DETAIL 2. LENGTH PER PLAN. (THERMOPLASTIC).
4. INSTALL 8" WHITE CHANNELIZING LINE PER CALTRANS REVISED STD. PLAN A20D, DETAIL 38. LENGTH PER PLAN. (THERMOPLASTIC).
5. INSTALL 6" DOUBLE YELLOW PER CALTRANS STANDARD PLAN A20A, DETAIL 22. LENGTH PER PLAN. (THERMOPLASTIC).
6. INSTALL 12" WHITE LIMIT LINE PER CALTRANS REVISED STANDARD PLAN A24G. LENGTH PER PLAN. (THERMOPLASTIC).
7. INSTALL BLUE REFLECTIVE FIRE HYDRANT PAVEMENT MARKER PER SPPWC STANDARD PLAN 170-0.
8. NOT USED.
9. REMOVE AND INSTALL NEW R2-1(25) SIGN PER CA MUTCD STANDARDS.
10. REMOVE AND INSTALL 36" STOP SIGN (R1-1) WITH 3M DIAMOND GRADE DG REFLECTIVE SHEETING PER CA MUTCD STANDARDS.
11. INSTALL WHITE PAVEMENT MARKINGS PER CALTRANS STANDARD PLAN A24D. (THERMOPLASTIC).
12. INSTALL NO STOPPING ANY TIME SIGN R28(S)(CA) PER CA MUTCD STANDARDS.
13. INSTALL SPEED LUMP STRIPING PER DETAIL AS SHOWN HEREON. LOCATION PER PLANS. (THERMOPLASTIC).
14. REMOVE AND INSTALL WHITE LADDER STYLE CROSSWALK PER CALTRANS STANDARD PLAN A24F. (THERMOPLASTIC).
15. INSTALL WHITE PAVEMENT MARKINGS PER CALTRANS STANDARD PLAN A24C. (THERMOPLASTIC).
16. REMOVE AND INSTALL WHITE PAVEMENT MARKINGS PER CALTRANS STANDARD PLAN A20B, DETAIL 27B. LENGTH PER PLAN.(THERMOPLASTIC).
17. REMOVE EXISTING STRIPIING PER SIGNING AND STRIPING GENERAL NOTE NO. 7.
18. INSTALL 6" WHITE RIGHT EDGELINE EXTENSION PER CALTRANS STANDARD PLAN A20B, DETAIL 27C. LENGTH PER PLAN.(THERMOPLASTIC).

LOOP DETECTOR NOTES

1. INSTALL TYPE F LOOP DETECTOR PER CALTRANS REVISED STANDARD PLAN RSP ES-5B, 1' BEFORE THE "LIMIT LINE." SPLICE NEW CONDUCTOR TO EXISTING DLC IN PULL BOX.
2. INSTALL TYPE E LOOP DETECTOR PER CALTRANS REVISED STANDARD PLAN RSP ES-5B. SPLICE NEW CONDUCTOR TO EXISTING DLC IN A PULL BOX.

0 20 40 80 Feet
1" = 40'

NO.	DATE	DESCRIPTION
4		
3		
2		
1		

REVISIONS

CITY OF LA HABRA

EUCLID STREET REHABILITATION PROJECT
WHITTIER BLVD TO NORTH CITY LIMITS PROJECT No. 1-R-21
SIGNING & STRIPING PLANS

PREPARED BY:
ARDURRA
3737 BIRCH STREET, SUITE 250
NEWPORT BEACH, CA 92660
P: 949.428.1500 F: 949.258.5053

REGISTERED PROFESSIONAL ENGINEER
JOSE L. HERNANDEZ
NO. 68384
CIVIL
STATE OF CALIFORNIA

SUBMITTED BY:
JOSE HERNANDEZ, P.E., PROJECT ENGINEER
DATE 08/15/24

RECOMMENDED BY:
ANDREW N. LUNA, P.E., ASSOCIATE CIVIL ENGINEER
DATE 9/27/2024

DWG. NO. I-D-XXX

SHEET 13 OF 14

TRAFFIC CONTROL NOTES:

1. ALL WORK, MATERIALS, TEMPORARY TRAFFIC CONTROL DEVICES, STRIPES, MARKINGS, PAVEMENT LEGENDS, RAISED PAVEMENT MARKERS, AND EQUIPMENT SHALL CONFORM TO THE LATEST EDITIONS OF; CALTRANS STANDARD PLANS AND CALTRANS STANDARD SPECIFICATIONS, CALIFORNIA MANUAL ON UNIFORM TRAFFIC CONTROL DEVICES (CA MUTCD), WORK AREA TRAFFIC CONTROL HANDBOOK (WATCH MANUAL), AND CALIFORNIA TEMPORARY TRAFFIC CONTROL HANDBOOK (CATTCH), FOLLOWED IN ORDER SHOWN.
2. THE CITY OF LA HABRA RESERVES THE RIGHT TO OBSERVE THESE TEMPORARY TRAFFIC CONTROL PLANS IN USE AND TO MAKE ANY NECESSARY CHANGES, OUTSIDE OF STATE RIGHT-OF-WAY, AS FIELD CONDITIONS WARRANT. ANY CHANGES SHALL SUPERSEDE THESE PLANS AND SHALL BE PERFORMED PER THE CA MUTCD (INCLUDING THE NEW LOCATION OF ALL EQUIPMENT AND TRAFFIC CONTROL DEVICES) WITH THE APPROVAL OF THE PUBLIC WORKS INSPECTOR, TRAFFIC MANAGER, OR DESIGNATED REPRESENTATIVE.
3. ALL TEMPORARY TRAFFIC CONTROL DEVICES SHALL BE KEPT IN THEIR PROPER POSITION AT ALL TIMES AND SHALL BE REPAIRED, REPLACED, OR CLEANED AS NECESSARY TO PRESERVE THEIR APPEARANCE AND CONTINUITY.
4. IT IS THE RESPONSIBILITY OF THE CONTRACTOR PERFORMING WORK TO INSTALL AND MAINTAIN THE TEMPORARY TRAFFIC CONTROL DEVICES AS SHOWN HEREIN, AS WELL AS ANY SUCH ADDITIONAL TEMPORARY TRAFFIC CONTROL DEVICES AS MAY BE REQUIRED TO INSURE THE SAFE MOVEMENT OF VEHICULAR AND PEDESTRIAN TRAFFIC THROUGH OR AROUND THE TEMPORARY WORK AREA AND PROVIDE MAXIMUM PROTECTION AND SAFETY TO CONSTRUCTION WORKERS AND THE AFFECTED PUBLIC.
5. ALL AFFECTED RESIDENTS AND BUSINESSES SHALL BE NOTIFIED AT LEAST FIVE (5) WORKING DAYS PRIOR TO THE START OF THE INSTALLATION OF TEMPORARY TRAFFIC CONTROL DEVICES.
6. ALL ADVANCE WARNING SIGNS SHALL BE EQUIPPED WITH FLAGS DURING DAY TIME WORKING HOURS AND WITH WARNING LIGHTS AT NIGHT, IF NIGHTTIME WORK IS APPROVED.
7. ALL TUBULAR DELINEATORS SHALL BE 42-INCH MINIMUM, PORTABLE, REFLECTORIZED RUBBER GUIDE POSTS, ORANGE IN COLOR, WITH DOUBLE WEIGHTED BASE RINGS, AND MAINTAINED ERECT IN THE INDICATED POSITION AT ALL TIMES.
8. ALL CONE DELINEATORS SHALL BE 28-INCH MINIMUM, PORTABLE, REFLECTORIZED, ORANGE IN COLOR, AND MAINTAINED ERECT IN THE INDICATED POSITION AT ALL TIMES.
9. DRUMS SHALL NOT BE USED AS A PORTABLE DELINEATOR AT ANY TIME.
10. ALL SIGNS SHALL BE RETRO-REFLECTORIZED AND STANDARD SIZE. TEMPORARY WORK AREA WARNING SIGNS SHALL BE ORANGE SIGN FACE.
11. THE CONTRACTOR SHALL MAINTAIN (ON A 24-HOUR IF EXTENDED WORK HOURS ARE APPROVED) BASIS ALL SIGNS, DELINEATORS, BARRICADES, AND OTHER TEMPORARY TRAFFIC CONTROL DEVICES, TO ENSURE PROPER FLOW AND SAFETY OF TRAFFIC.
12. PEDESTRIAN ACCESS SHALL COMPLY WITH THE REQUIREMENTS OF THE AMERICANS WITH DISABILITIES ACT ACCESSIBILITY GUIDELINES (ADAAG) AND WITH THE CALIFORNIA ACCESSIBILITY GUIDELINES RELATIVE TO PEDESTRIAN ACCESS AND SHALL MAINTAIN PEDESTRIAN ACCESS AT ALL TIMES PER ADA REQUIREMENTS. SIDEWALK CLOSURE/DETOUR SHALL COMPLY WITH CA MUTCD STANDARDS.
13. ALL THE STREETS INDICATED ON PLAN TO BE CLOSED WITH WATER FILLED TYPE K BARRIERS SHALL BE PROVIDED WITH 15-FOOT MINIMUM OPENING ACCESS FOR THE FIRE AND EMERGENCY VEHICLES. THE EMERGENCY ACCESS OPENING SHALL BE CLOSED WITH BARRICADES.
14. ALL CONFLICTING SIGNS SHALL BE COVERED (WITH AN APPROVED MATERIAL) DURING THE IMPLEMENTATION OF THIS TEMPORARY TRAFFIC CONTROL PLAN.
15. ALL FLASHING ARROW SIGNS/BOARDS SHALL BE SOLAR POWERED.
16. THE CONTRACTOR SHALL REMOVE TEMPORARY TRAFFIC DELINEATION, SIGNAGE, AND OTHER TEMPORARY TRAFFIC CONTROL DEVICES WHEN NO LONGER REQUIRED, AND SHALL RESTORE AREAS TO ORIGINAL CONDITIONS, INCLUDING THE REMOVAL OF TEMPORARY COVERS.
17. THE CONTRACTOR SHALL PROVIDE FLAGMEN AS ACCESSORY TO GIVE ADEQUATE WARNING TO TRAFFIC OR TO THE PUBLIC OF ANY DANGEROUS CONDITIONS TO BE ENCOUNTERED. THE PUBLIC WORKS INSPECTOR, TRAFFIC MANAGER, OR DESIGNATED REPRESENTATIVE MAY REQUEST ADDITIONAL FLAGMEN AS NECESSARY.
18. CONFLICTING STRIPING OR PAVEMENT MARKINGS SHALL NOT BE REMOVED. THE CONTRACTOR MAY ELECT TO COVER CONFLICTING STRIPING OR PAVEMENT MARKINGS WITH TEMPORARY REMOVABLE STRIPING TAPE (DETOUR GRADE, AND BLACK IN COLOR) IF APPROVED TO DO SO BY THE TRAFFIC MANAGER, OR DESIGNATED REPRESENTATIVE.
19. ALL OPEN EXCAVATION OR CONSTRUCTION WORK SHALL BE A MINIMUM OF FIVE (5) FEET FROM ANY OPERATING TRAFFIC LANES AND A MINIMUM OF TWO (2) FEET FROM ANY VERTICAL OBSTRUCTIONS.
20. TRAFFIC SIGNALS SHALL REMAIN IN NORMAL OPERATION AT ALL TIMES. THE CONTRACTOR SHALL NOTIFY THE TRAFFIC MANAGER, OR DESIGNATED REPRESENTATIVE, OF ANY DAMAGE TO OR MALFUNCTION OF ANY TRAFFIC SIGNAL EQUIPMENT OR WIRING. IN THE EVENT THE DAMAGE OR MALFUNCTION CAUSES THE TRAFFIC SIGNAL TO FAIL, THE CONTRACTOR SHALL IMMEDIATELY NOTIFY THE CITY OF LA HABRA POLICE DEPARTMENT AT (562) 383-4300.
21. THE CONTRACTOR SHALL COORDINATE WITH THE TRAFFIC MANAGER OR DESIGNATED REPRESENTATIVE FOR ANY TEMPORARY TRAFFIC SIGNAL TIMING MODIFICATIONS AND SHALL WAIT TO MAKE ANY ADJUSTMENTS UNTIL RECEIVING APPROVAL OF SUCH REQUEST.
22. THE CITY SHALL NOT PROVIDE STOP SIGNS AT INOPERABLE INTERSECTIONS FOR NON-CITY RELATED ACTIVITY. CONTRACTOR MAY PROVIDE STOP SIGNS AT INOPERABLE INTERSECTIONS DUE TO THEIR CONSTRUCTION RELATED ACTIVITY BUT ARE NOT REQUIRED PER CVC 21800 (D) (1) BUT IT IS HIGHLY RECOMMENDED TO DO SO FOR VISIBILITY AND SAFETY PURPOSES.
23. THE CONTRACTOR SHALL PROVIDE FOR ACCESS TO ALL ADJACENT PROPERTIES DURING WORK HOURS. CONSTRUCTION OPERATIONS SHALL BE CONDUCTED IN SUCH A MANNER AS TO CAUSE AS LITTLE INCONVENIENCE AS POSSIBLE TO ABUTTING PROPERTY OWNERS/OPERATORS.
24. AT LOCATIONS WHERE SIDEWALKS MUST BE CLOSED AND NO ALTERNATIVE PATH OF TRAVEL IS PROVIDED, STANDARD R9-SERIES SIGNS SHALL BE UTILIZED WITH SIGNS PROVIDED IN ADVANCE AT THE NEAREST SIGNALIZED INTERSECTION OR OTHER CITY-APPROVED CROSSING LOCATION. IN ADDITION, AT LOCATIONS WHERE A SIDEWALK IS CLOSED AND PEDESTRIANS MIGHT ATTEMPT TO BYPASS THE WORK AREA BY WALKING IN THE ROADWAY, R5-10C SIGNS SHALL BE PROVIDED IN THE ROADWAY FACED TOWARD APPROACHING PEDESTRIANS.
25. THE CONTRACTOR SHALL PROVIDE FOR SAFE PEDESTRIAN ACCESS AT ALL TIMES. AUDIBLE INFORMATION DEVICES ARE TO BE USED TO ALERT PEDESTRIANS WITH VISUAL DISABILITIES, WHERE NEEDED.
26. CONSTRUCTION WHICH AFFECTS BIKE LANES SHALL BE TREATED AS DESCRIBED IN THE LATEST RELEASE FROM CALTRANS REGARDING SUCH ACTIVITIES, INCLUDING MODIFIED SIGNS SC11(CA) "BIKE LANE CLOSED" AND W20-5 "BIKE LANE CLOSED AHEAD", AS WELL AS THE W11-1 AND W16-1 SIGNS. TO THE EXTENT POSSIBLE, BIKE LANES SHALL BE CARRIED THROUGH TEMPORARY WORK AREA.
27. ALL DRIVEWAYS SHALL REMAIN OPEN AT ALL TIMES, UNLESS NOTED OTHERWISE.
28. TEMPORARY "NO STOPPING" SIGNS SHALL BE INSTALLED AT LEAST FORTY-EIGHT (48) HOURS BEFORE ENFORCEMENT. IT IS HIGHLY RECOMMENDED TO DOCUMENT WITH TIMESTAMPED PHOTOGRAPHS TO SERVE AS A RECORD SHOULD THE SIGNS BECOME DISTURBED. THE CITY OF LA HABRA POLICE DEPARTMENT WILL NOT TOW VEHICLES IF PROOF IS NOT AVAILABLE.
29. NO SIGNS, MARKINGS, OR OTHER TRAFFIC CONTROL DEVICES SHALL BE SUBSTITUTED FOR THOSE CALLED FOR IN THIS PLAN SHALL BE PLACED IN THE PUBLIC RIGHT-OF-WAY UNLESS PRIOR WRITTEN AUTHORIZATION IS RECEIVED FROM THE TRAFFIC MANAGER, OR DESIGNATED REPRESENTATIVE.
30. NO VEHICLES, EQUIPMENT, OR OTHER MATERIALS SHALL BE STAGED, STORED, OR PARKED OUTSIDE THE WORK AREA DESIGNATED ON THE PLAN UNLESS PRIOR WRITTEN AUTHORIZATION IS RECEIVED FROM THE TRAFFIC MANAGER, OR THE DESIGNATED REPRESENTATIVE.
31. ARTERIAL WEEKDAY WORK HOURS: 9:00AM TO 3:00PM
OTHER STREET WEEKDAY WORK HOURS: 7:00AM TO 4:00PM
32. THE CONTRACTOR SHALL NOT INSTALL TRAFFIC CONTROL DEVICES WITHIN THE PUBLIC RIGHT-OF-WAY BEFORE 9:00AM (FOR ARTERIAL ROADWAYS) AND 7:00AM (FOR OTHER STREETS) AND SHALL REMOVE ALL TRAFFIC CONTROL DEVICES PRIOR TO 3:00PM (FOR ARTERIAL ROADWAYS) AND 4:00PM (FOR OTHER STREETS) UNLESS SPECIAL WORKING HOURS HAVE BEEN APPROVED BY THE CITY ENGINEER, OR THE DESIGNATED REPRESENTATIVE. ANY TRAFFIC CONTROL DEVICES REMAINING OUTSIDE OF APPROVED WORKING TIMES WILL BE PICKED UP AND DISPOSED BY THE CITY.
33. ORANGE COUNTY TRANSPORTATION AUTHORITY (OCTA) SHALL BE NOTIFIED FIVE (5) WORKING DAYS PRIOR TO ANY WORK WHICH AFFECTS THEIR ROUTES - (714) 530-6060.
34. TEMPORARY TRAFFIC CONTROL PLANS SHALL BE ON THE CONTRACTOR AT ALL TIMES WHILE PERFORMING TEMPORARY TRAFFIC CONTROL WORK WITHIN THE TEMPORARY WORK AREA.
35. TRAFFIC CONTROL SETUP SHALL BE INSPECTED BY THE PUBLIC WORKS INSPECTOR, TRAFFIC MANAGER, OR DESIGNATED REPRESENTATIVE AND APPROVED PRIOR TO THE COMMENCEMENT OF ANY WORK IN THE PUBLIC RIGHT-OF-WAY.
36. THE CONTRACTOR SETTING UP TEMPORARY TRAFFIC CONTROL SHALL BE CALIFORNIA C-31 LICENSED AND ATSSA CERTIFIED (OR APPROVED EQUAL).
37. CONTRACT IS FOR 45 WORKING DAYS

NOTE:

LANE/STREET CLOSURES WILL BE LIMITED TO THE HOURS OF 9:00AM TO 3:00PM

CONTRACTOR TO RESTORE ALL LANES OF TRAFFIC AT THE END OF EACH WORKING DAY

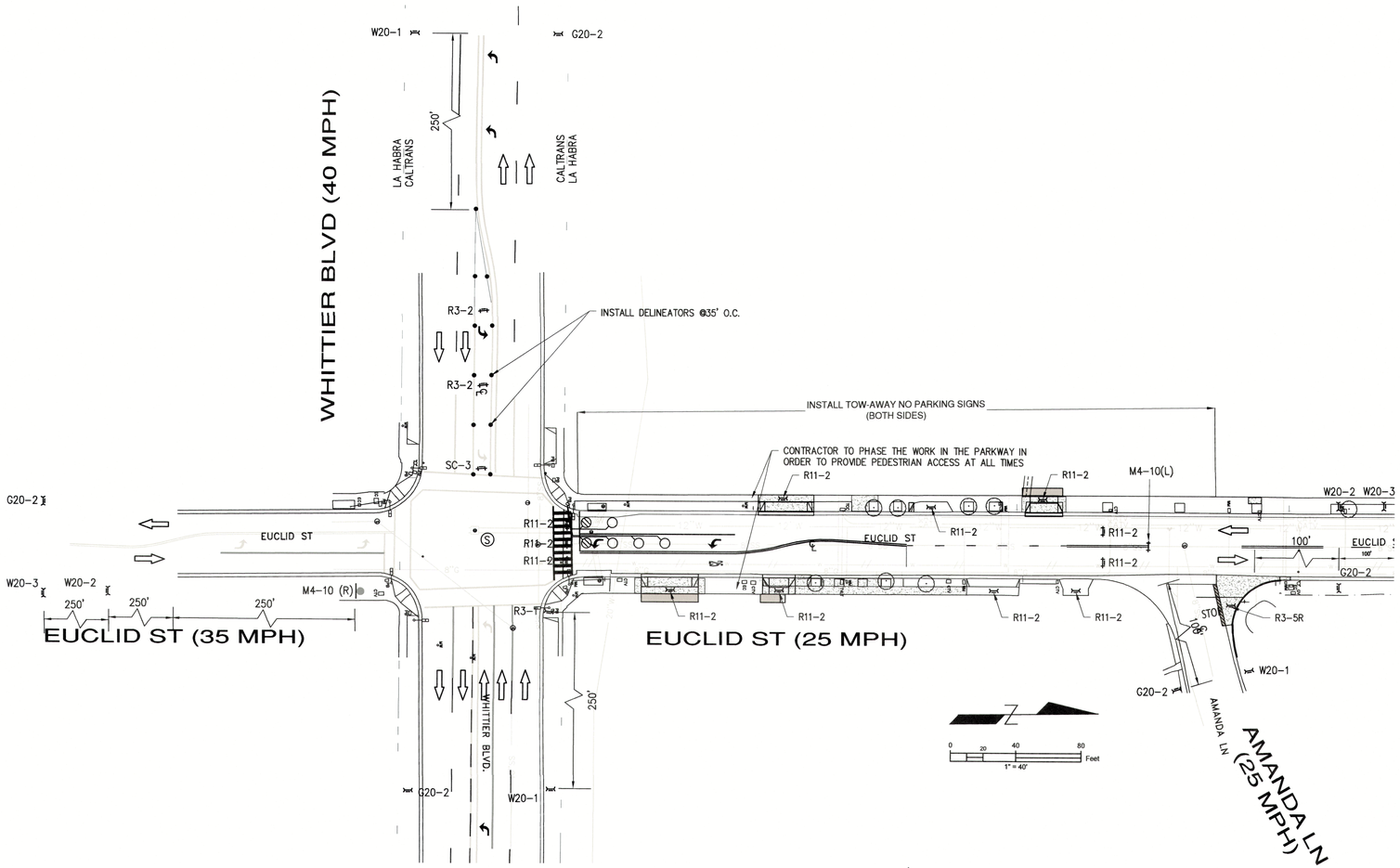

SIGN LEGEND

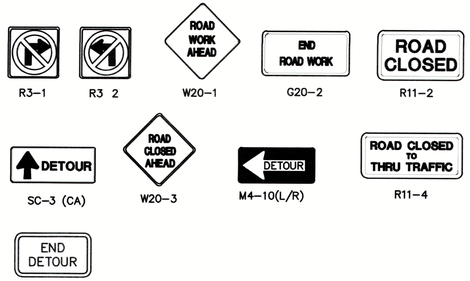

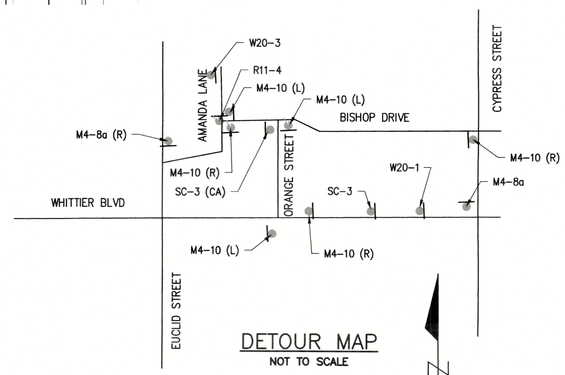

DETOUR MAP
NOT TO SCALE

LEGEND

1. ▨ = WORK AREA
2. = PROPOSED TYPE II BARRICADE WITH SIGN
3. = PROPOSED TYPE III BARRICADE WITH SIGN
4. ○ = PROPOSED 42" PORTABLE DELINEATOR
5. ═══ = K-RAIL
6. ⇨ = DIRECTION OF TRAFFIC (NOT A PAVEMENT MARKING)
7. = PROPOSED TRAFFIC SIGN
8. Ⓢ = SIGNALIZED INTERSECTION

CALTRANS PERMIT NO.: 1222-NSN-0324
DUAL PERMIT TO BE OBTAINED BY THE CONTRACTOR

NO.	DATE	DESCRIPTION	BY
1			
2			
3			
4			

REVISIONS

CITY OF LA HABRA

EUCLID STREET REHABILITATION PROJECT
WHITTIER BLVD TO NORTH CITY LIMITS PROJECT No. 1-R-21

TRAFFIC CONTROL PLAN

PREPARED BY:
ARDURRA
3737 BIRCH STREET, SUITE 250
NEWPORT BEACH, CA 92660
P: 949.428.1500 F: 949.258.5053

REGISTERED PROFESSIONAL ENGINEER
JOSE L. HERNANDEZ
NO. 68384
CIVIL
STATE OF CALIFORNIA

SUBMITTED BY:
JOSE HERNANDEZ, P.E., PROJECT ENGINEER
DATE 08/15/24

RECOMMENDED BY:
ANDREW N. LUNA, P.E., ASSOCIATE CIVIL ENGINEER
DATE 8/22/2024

DWG. NO. I-D-XXX

SHEET 14 OF 14

APPENDIX “B”

STANDARD PLANS

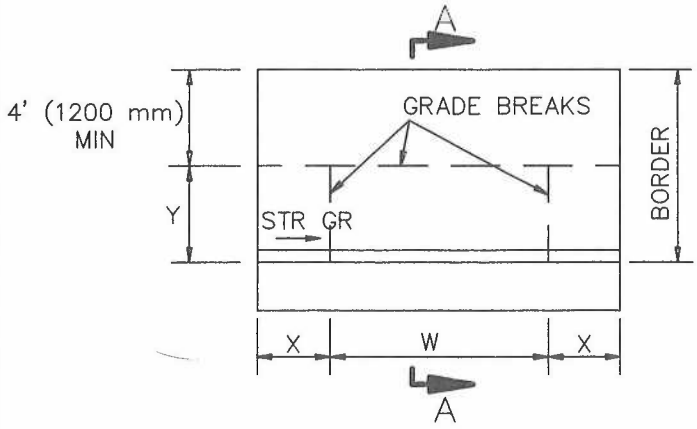

TYPE A

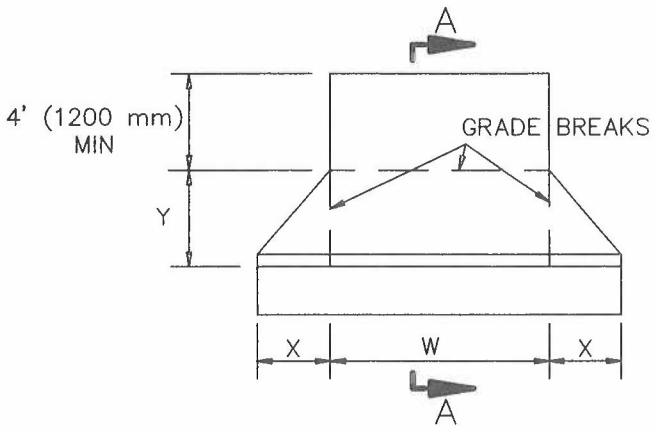

TYPE B

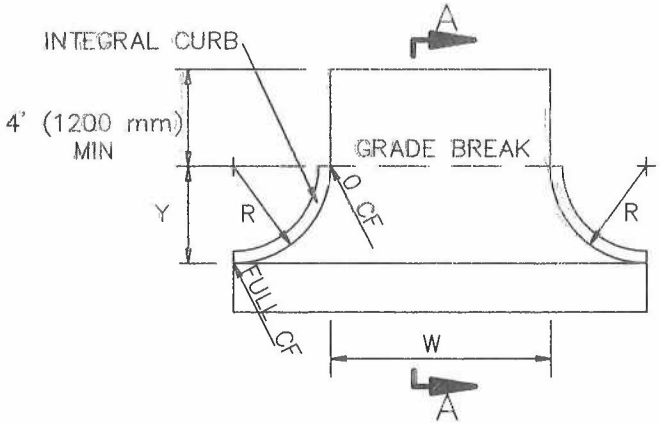

TYPE C

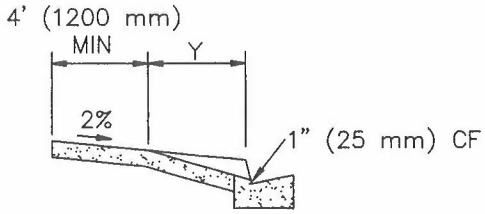

SECTION A–A

CURB FACE, inches (mm)	X, inches (mm)	Y, inches (mm)
6" (150) or less	3'–0" (900)	4'–0" (1200)
7" (175)	3'–6" (1050)	4'–9" (1425)
8" (200)	4'–0" (1200)	5'–8" (1700)
9" (225)	4'–6" (1350)	6'–6" (1950)
10" (250)	5'–0" (1500)	7'–3" (2175)
11" (275)	5'–6" (1650)	8'–0" (2400)
12" (300) or more	6'–0" (1800)	8'–9" (2625)

NOTES:

1. RESIDENTIAL DRIVEWAYS SHALL BE 4" (100 mm) THICK PCC.
2. COMMERCIAL DRIVEWAYS SHALL BE 6" (150 mm) THICK PCC.
3. WEAKENED PLANE JOINTS SHALL BE INSTALLED AT BOTH SIDES OF A DRIVEWAY AND AT 10' (3.0 m) INTERVALS.
4. CURB FOR TYPE C DRIVEWAY SHALL BE INTEGRAL AND MATCH ADJACENT CONSTRUCTION.
5. REFER TO LOCAL DEVELOPMENT REGULATIONS FOR AMERICANS WITH DISABILITIES ACCESS REQUIREMENTS AND MAXIMUM PERMITTED DRIVEWAY WIDTHS.

STANDARD PLANS FOR PUBLIC WORKS CONSTRUCTION

PROMULGATED BY THE PUBLIC WORKS STANDARDS INC. GREENBOOK COMMITTEE 1984 REV. 1996, 2009

DRIVEWAY APPROACHES

USE WITH STANDARD SPECIFICATIONS FOR PUBLIC WORKS CONSTRUCTION

STANDARD PLAN 110–2

SHEET 1 OF 1

WALK OR FILL–IN REPLACEMENT FOR EXCAVATIONS MADE PARALLEL TO CURB OR PROPERTY LINE

WALK ADJACENT TO PROPERTY LINE

WALK LESS THAN 5' (1500 mm) WIDE

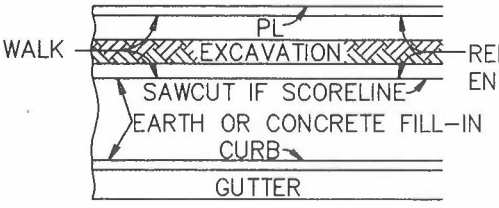

WALK 5' (1500 mm) WIDE OR MORE

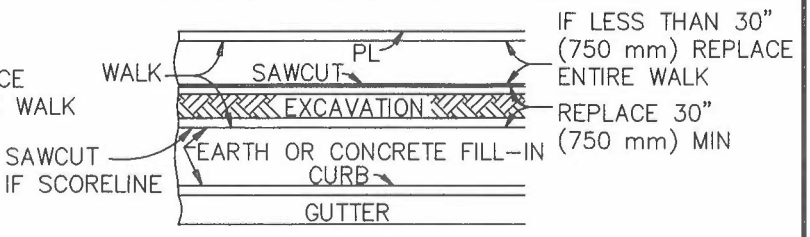

WALK ADJACENT TO CURB

WALK LESS THAN 5' (1500 mm) WIDE



WALK 5' (1500 mm) WIDE OR MORE

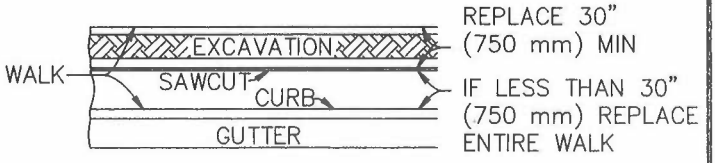

FILL–IN REPLACEMENT

FILL–IN LESS THAN 5' (1500 mm) WIDE

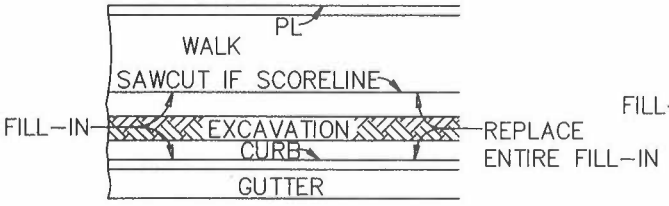

FILL–IN 5' (1500 mm) WIDE OR MORE

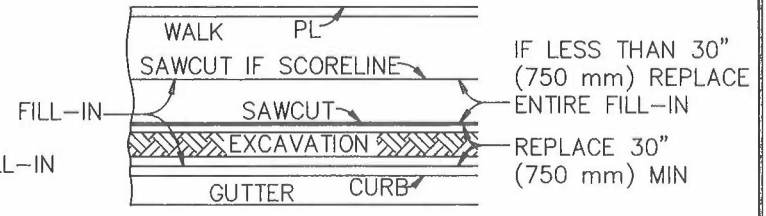

WALK OR FILL–IN REPLACEMENT FOR EXCAVATIONS MADE NORMAL TO CURB OR PROPERTY LINE

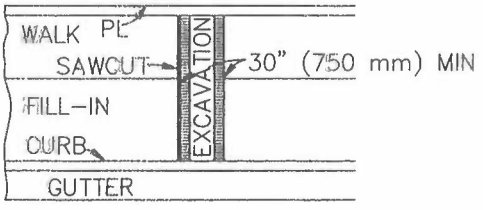

THESE REQUIREMENTS ALSO APPLY TO ENDS OF PARALLEL EXCAVATIONS.

IF AN EXCAVATION FALLS WITHIN 30" (750 mm) OF AN EXPANSION JOINT, CONSTRUCTION JOINT, WEAKENED PLANE JOINT, OR EDGE, THE CONCRETE SHALL BE REMOVED AND REPLACED TO THE JOINT OR EDGE.

IF AN EXCAVATION FALLS WITHIN 12" (300 mm) OF A SCORELINE, THE CONCRETE SHALL BE REMOVED AND REPLACED TO THE SCORELINE. THE SCORELINE SHALL BE SAWCUT BEFORE CONCRETE REMOVAL.

THE MINIMUM LENGTH OF REPLACEMENT IN BOTH CASES SHALL BE 30" (750 mm).

NOTES

1. CONCRETE WALK, FILL–IN AND DRIVEWAYS REMOVED IN CONNECTION WITH CONSTRUCTION SHALL BE REPLACED TO NEATLY SAWED EDGES. ALL CUTS SHALL BE PARALLEL TO OR PERPENDICULAR TO THE CURB; ON CURVES, THE CUT SHALL BE RADIAL TO THE CURB.

2. DRIVEWAY APRONS IN WHICH THE "W" DISTANCE IS LESS THAN 11' (3300 mm) SHALL BE REPLACED IN THEIR ENTIRETY IF CUT IN ANY AREA.

3. DRIVEWAY APRONS IN WHICH THE "W" DISTANCE IS 11' (3300 mm') OR MORE MAY BE CUT WITHIN THE "W" SECTION. THE MINIMUM REPLACEMENT SHALL BE 30" (750 mm) IN LENGTH. THE MINIMUM DISTANCE ALLOWED BETWEEN SUCH CUTS SHALL BE 14' (4200 mm').

4. DRIVEWAY APRONS IN WHICH THE "W" DISTANCE IS 11' (3300 mm) OR MORE MAY BE CUT IN THE "X" OR "R" SECTION. REPLACEMENT SHALL BE THE ENTIRE "X" OR "R" SECTION.

5. DRIVEWAY APRONS SHALL BE REPLACED FROM THE BACK OF THE CURB TO THE FRONT EDGE OF THE WALK, EXCEPT, WHERE WALK IS ADJACENT TO CURB, REPLACEMENT SHALL BE FROM BACK OF CURB TO BACK OF WALK.

6. WALK PORTIONS OF DRIVEWAYS SHALL BE REPLACED AS SHOWN ABOVE FOR EXCAVATIONS MADE PARALLEL OR NORMAL TO CURB.

7. REPLACEMENT OF THE "X" OR "R" SECTION SHALL MATCH EXISTING CONSTRUCTION.

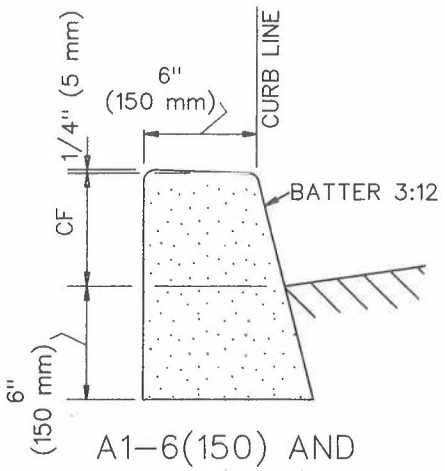

A1–6(150) AND
A1–8(200)

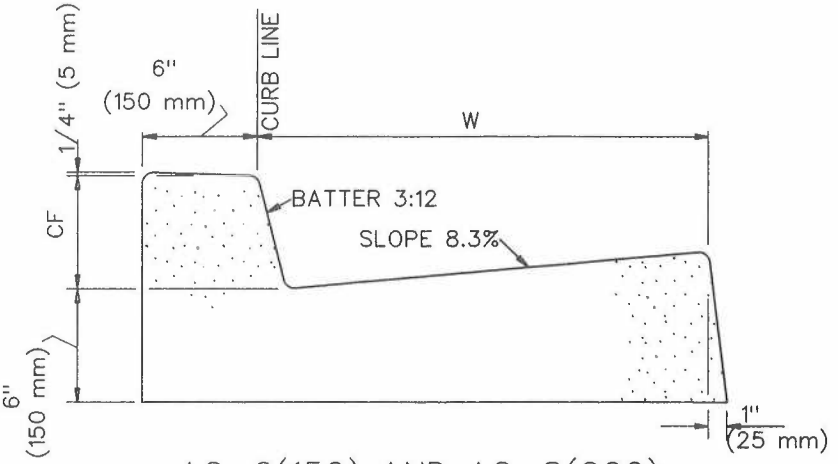

A2–6(150) AND A2–8(200)

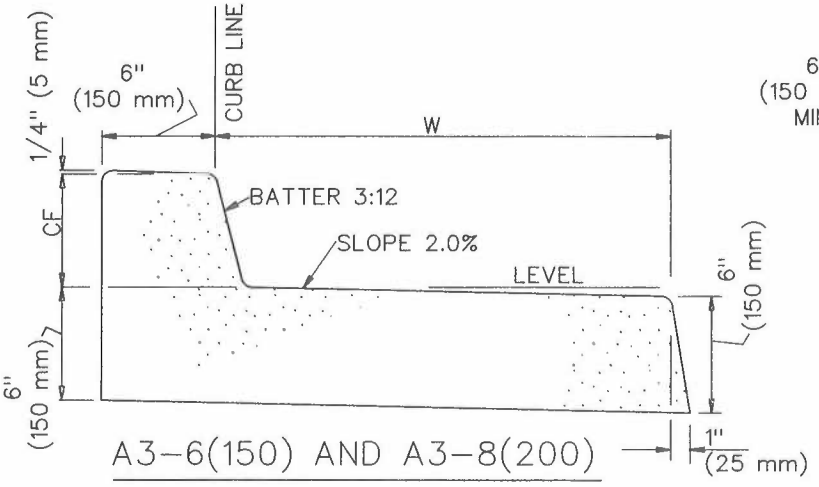

A3–6(150) AND A3–8(200)

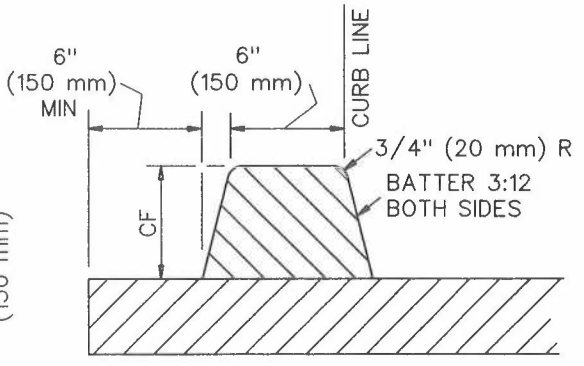

D1–6(150) AND
D1–8(200)

NOTES:

1. THE LAST NUMBER IN THE DESIGNATION IS THE CURB FACE (CF) HEIGHT, INCHES (mm). IF SHOWN AS 'VAR' THE CURB FACE VARIES.
2. GUTTER WIDTH, W, IS 24" (600 mm) UNLESS OTHERWISE SPECIFIED.
3. TYPES A1, A2, A3 AND C1 SHALL BE CONSTRUCTED OF CONCRETE.
4. TYPE D1 CURB SHALL BE CONSTRUCTED OF ASPHALT CONCRETE.
5. TYPE C1 CURB SHALL BE ANCHORED WITH STEEL DOWELS AS SHOWN OR WITH AN EPOXY APPROVED BY THE ENGINEER.
6. ALL EXPOSED CORNERS ON CONCRETE CURBS AND GUTTERS SHALL BE ROUNDED WITH A 1/2" (15 mm) RADIUS.

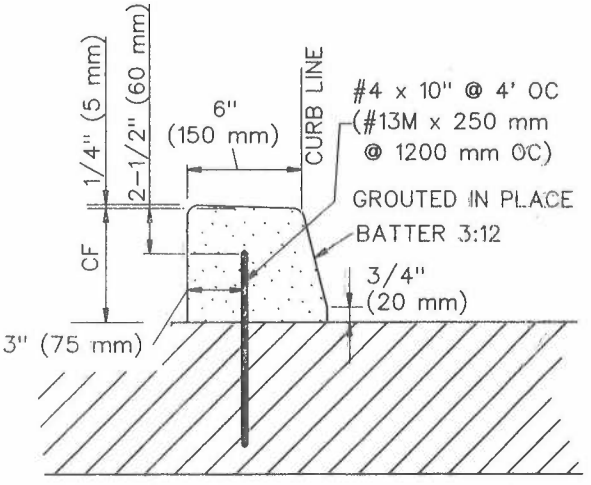

C1–6(150) AND C1–8(200)

STANDARD PLANS FOR PUBLIC WORKS CONSTRUCTION

PROMULGATED BY THE
PUBLIC WORKS STANDARDS INC.
GREENBOOK COMMITTEE
1984
REV. 1986, 2009, 2021

CURB AND GUTTER – BARRIER

USE WITH STANDARD SPECIFICATIONS FOR PUBLIC WORKS CONSTRUCTION

STANDARD PLAN
120–3
SHEET 1 OF 1

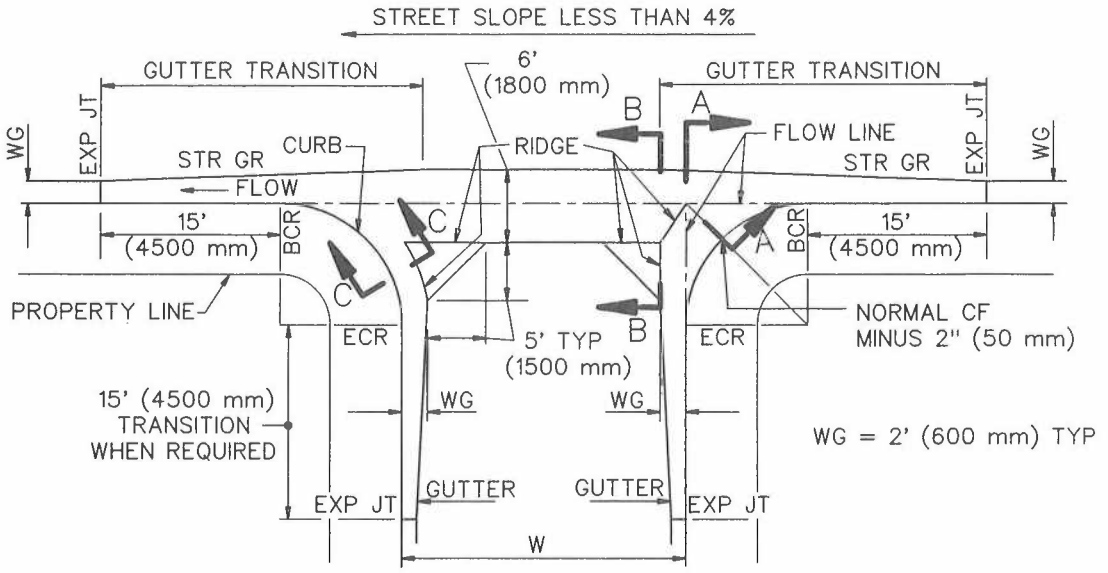

TYPICAL CROSS GUTTER PLAN
STREET SLOPE LESS THAN 4%

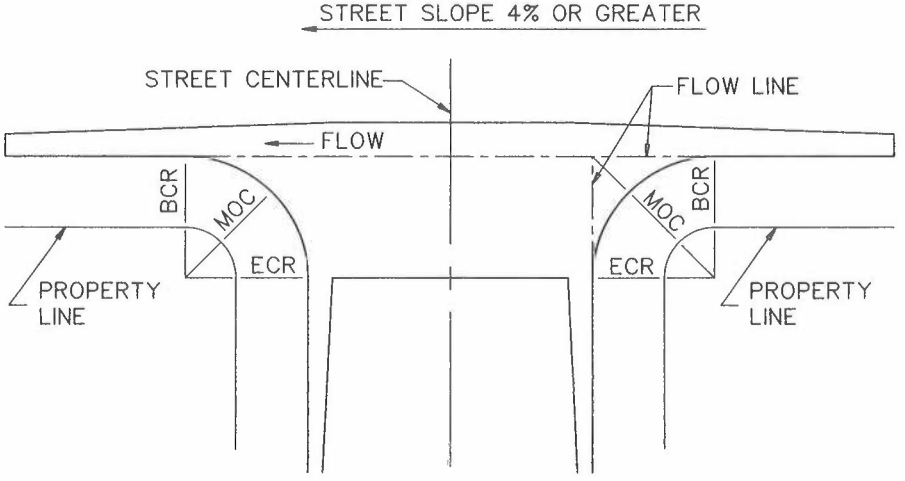

TYPICAL CROSS GUTTER PLAN
STREET SLOPE 4% OR GREATER

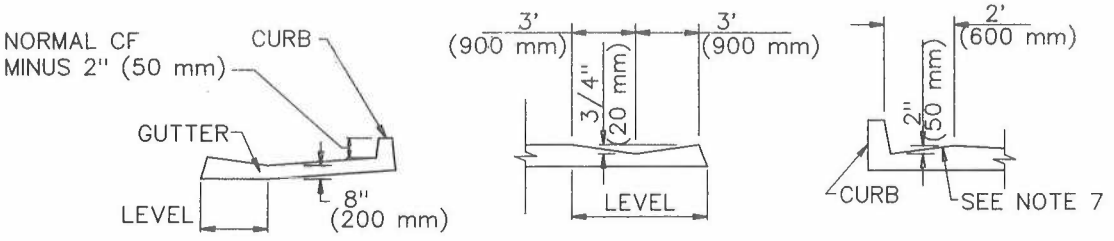

SECTION A–A SECTION B–B SECTION C–C

STANDARD PLANS FOR PUBLIC WORKS CONSTRUCTION

PROMULGATED BY THE
PUBLIC WORKS STANDARDS INC.
GREENBOOK COMMITTEE
1984
REV. 1993, 2009, 2021

CROSS AND LONGITUDINAL GUTTERS

USE WITH STANDARD SPECIFICATIONS FOR PUBLIC WORKS CONSTRUCTION

STANDARD PLAN
122–3
SHEET 1 OF 2

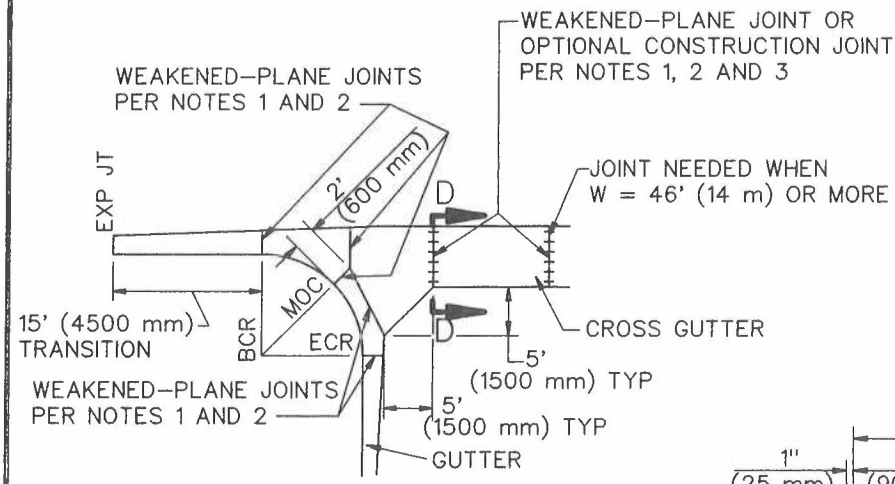

TYPICAL JOINT PLAN

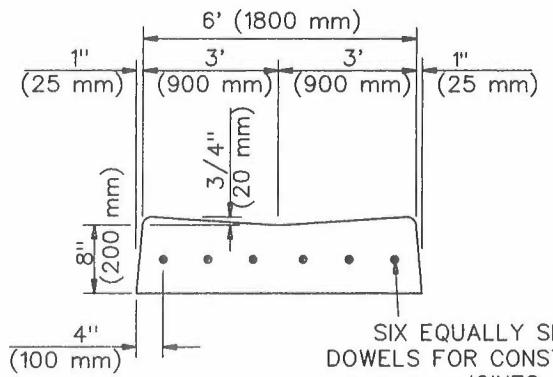

SECTION D–D

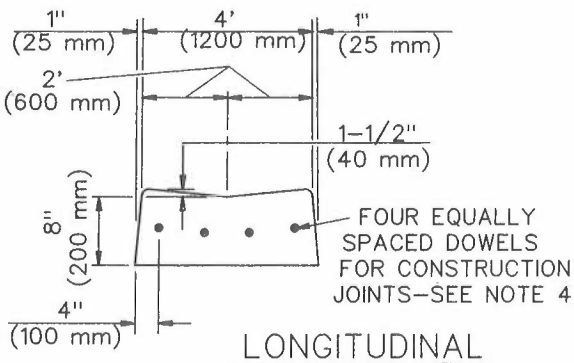

LONGITUDINAL GUTTER

NOTES:

1. WEAKENED–PLANE AND/OR CONSTRUCTION JOINTS SHALL BE PLACED IN CURB AND GUTTER AT LOCATIONS SHOWN ON THE TYPICAL JOINT PLAN HEREON.
2. WEAKENED–PLANE JOINTS SHALL BE PLASTIC CONTROL JOINTS OR 1–1/2" (40 mm) DEEP SAW CUTS. CONCRETE SAWING SHALL TAKE PLACE WITHIN 24 HOURS AFTER CONCRETE IS PLACED.
3. DOWELS FOR CONSTRUCTION JOINTS SHALL BE #4 BARS 18" LONG (#13M BARS 450 mm LONG).
4. PLACE A WEAKENED–PLANE OR CONSTRUCTION JOINT WHERE LONGITUDINAL ALLEY GUTTER JOINS CONCRETE ALLEY INTERSECTION.
5. ALL EXPOSED CORNERS ON PCC CURBS AND GUTTERS SHALL BE ROUNDED WITH 1/2" (15 mm) RADIUS.
6. CONCRETE SHALL BE INTEGRAL WITH CURB UNLESS OTHERWISE SPECIFIED.
7. ADJACENT TO CURB RAMPS, CONCRETE SLOPE SHALL BE 5% MAXIMUM FOR A DISTANCE OF 5 FEET (1525 mm) FROM THE CURB FACE FOR THE WIDTH OF THE WIDTH OF THE RAMP, NOT INCLUDING SIDE TRANSITION CURBS.

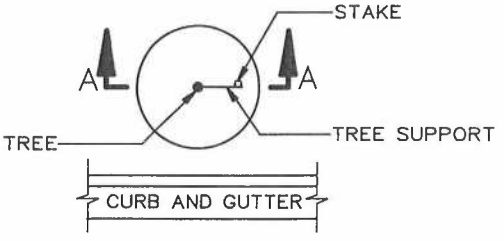

PLAN

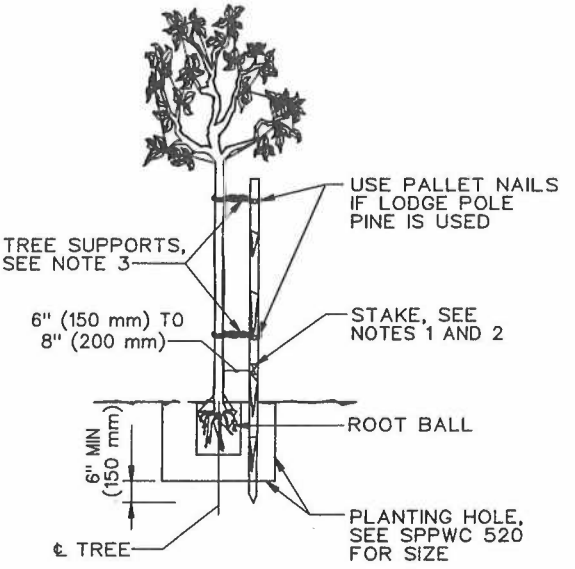

SECTION A–A

SINGLE STAKING

NOTES:

1. STAKE SHALL BE EITHER 2" (50 mm) DIAMETER LODGE POLE PINE TREATED WITH COPPER NAPTHANATE OR PRESSURE TREATED WITH CHROMATED COPPER ARSENATE, OR GALVANIZED STEEL PIPE PER SSPWC 801–4.6.1 (METHOD A).
2. HEIGHT OF STAKE SHALL BE 10' (3 m); HOWEVER, IT SHALL NOT BE HIGHER THAN THE TOP OF THE TREE.
3. TREE SUPPORTS SHALL BE PER SSPWC 801–4.6.1.

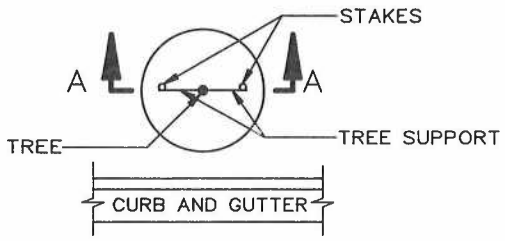

PLAN

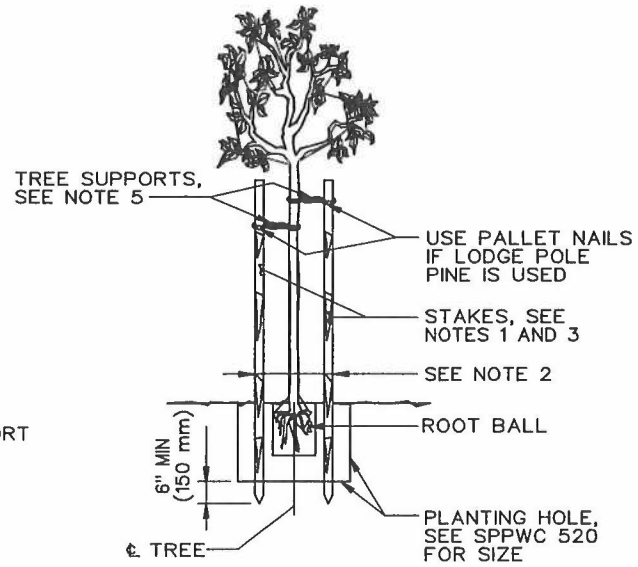

SECTION A–A

LENGTH OF STAKES	
TREE SIZE	LENGTH
15 GAL (55 L)	10' (3 m)
24" (600 mm) BOX	12' (3.6 m)
30" (750 mm) BOX	12' (3.6 m)
36"–48" (900 – 1200 mm) BOX	SEE NOTE 4

DOUBLE STAKING

NOTES:

1. STAKE SHALL BE EITHER 50 mm (2") DIAMETER LODGE POLE PINE, TREATED WITH COPPER NAPTHANATE OR PRESSURE TREATED WITH CHROMATED COPPER ARSENATE, OR GALVANIZED STEEL PIPE, PER SSPWC 801–4.6.1 (METHOD A).
2. PLACE STAKES 18" (450 mm) APART FOR 15 GAL (55 L) TREE. PLACE STAKES AT OUTER EDGE OF ROOT BALL FOR LARGER SIZE (BOX) TREES.
3. HEIGHT OF STAKES SHALL NOT BE HIGHER THAN THE TOP OF THE TREE.
4. FOR 36" (900 mm) OR LARGER BOX TREES: STAKE OR GUY AT THE DIRECTION OF THE ENGINEER.
5. TREE SUPPORTS SHALL BE PER SSPWC 801–4.6.1.

GUY WIRE SIZES

24"–48" BOX (600 – 1200 mm)	2 STRAND #12 BWG (2.7 mm) ZINC COATED
OVER 48" (1200 mm) BOX	3 STRAND #12 BWG (2.7 mm) ZINC COATED

MULTIPLE STRANDS SHALL BE TWISTED TOGETHER



LOOP HOSES 1" (25 mm) GREATER THAN TRUNK DIA



TYING PLAN

INSTALL WIRE TIES BETWEEN INDIVIDUAL GUYS PRIOR TO TENSIONING GUYS

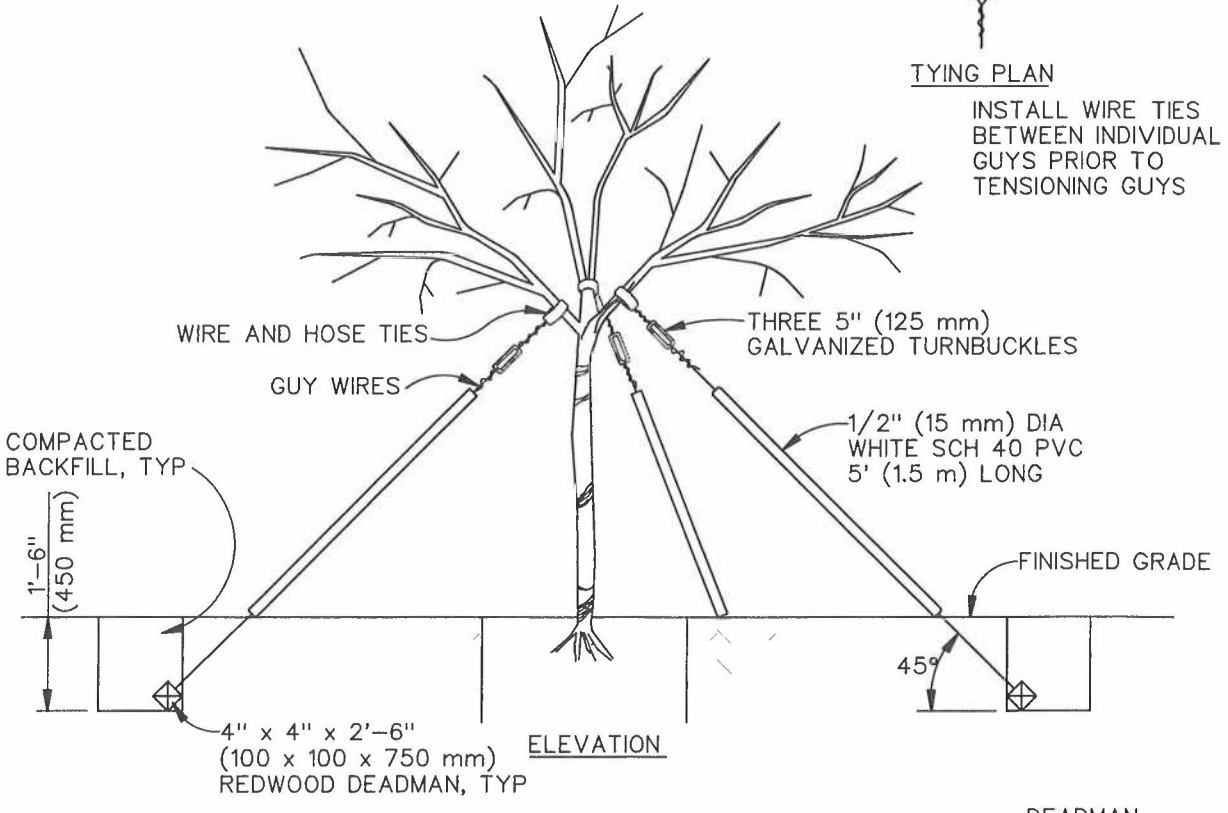

ELEVATION

TREE GUYING

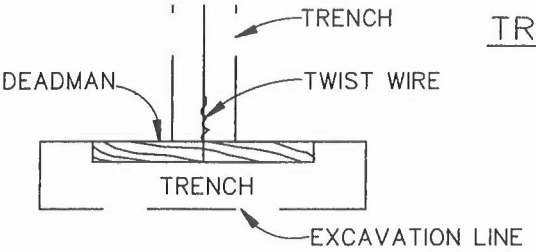

PLAN
DEADMAN

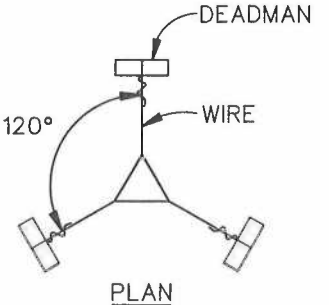

PLAN
DEADMAN PLACEMENT

STANDARD PLANS FOR PUBLIC WORKS CONSTRUCTION	STANDARD PLAN 518–4 SHEET 3 OF 3
TREE STAKING	

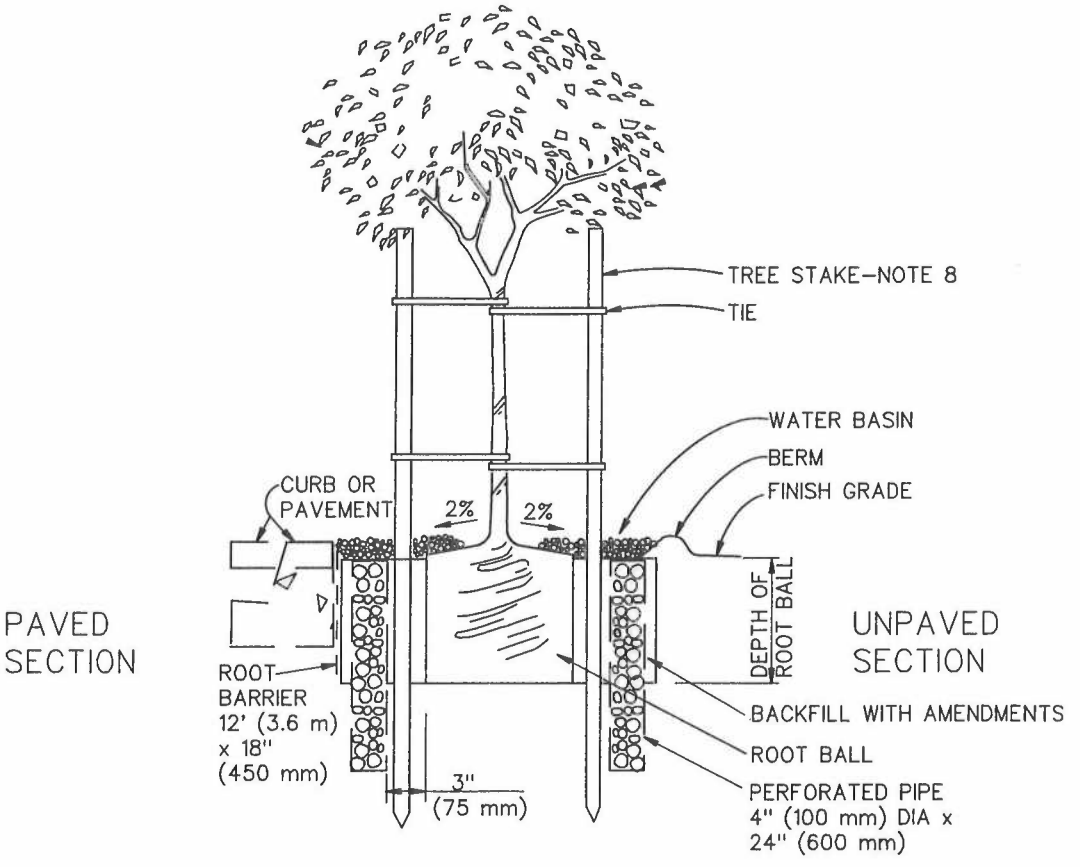

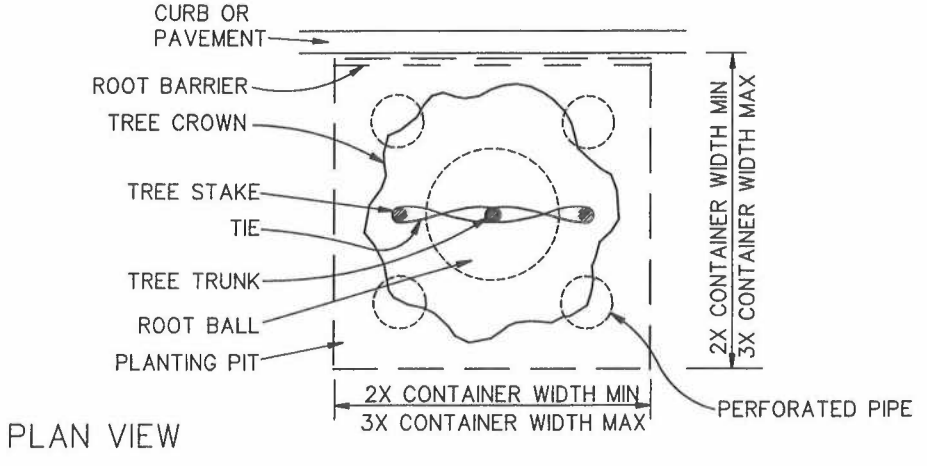

PLAN VIEW

UNPAVED PARKWAY
15 GAL (55 L) OR 24" (600 mm) BOX

STANDARD PLANS FOR PUBLIC WORKS CONSTRUCTION

PROMULGATED BY THE PUBLIC WORKS STANDARDS INC. GREENBOOK COMMITTEE 1984 REV. 1993, 1996, 2005, 2009, 2021

TREE PLANTING

USE WITH STANDARD SPECIFICATIONS FOR PUBLIC WORKS CONSTRUCTION

STANDARD PLAN 520–5

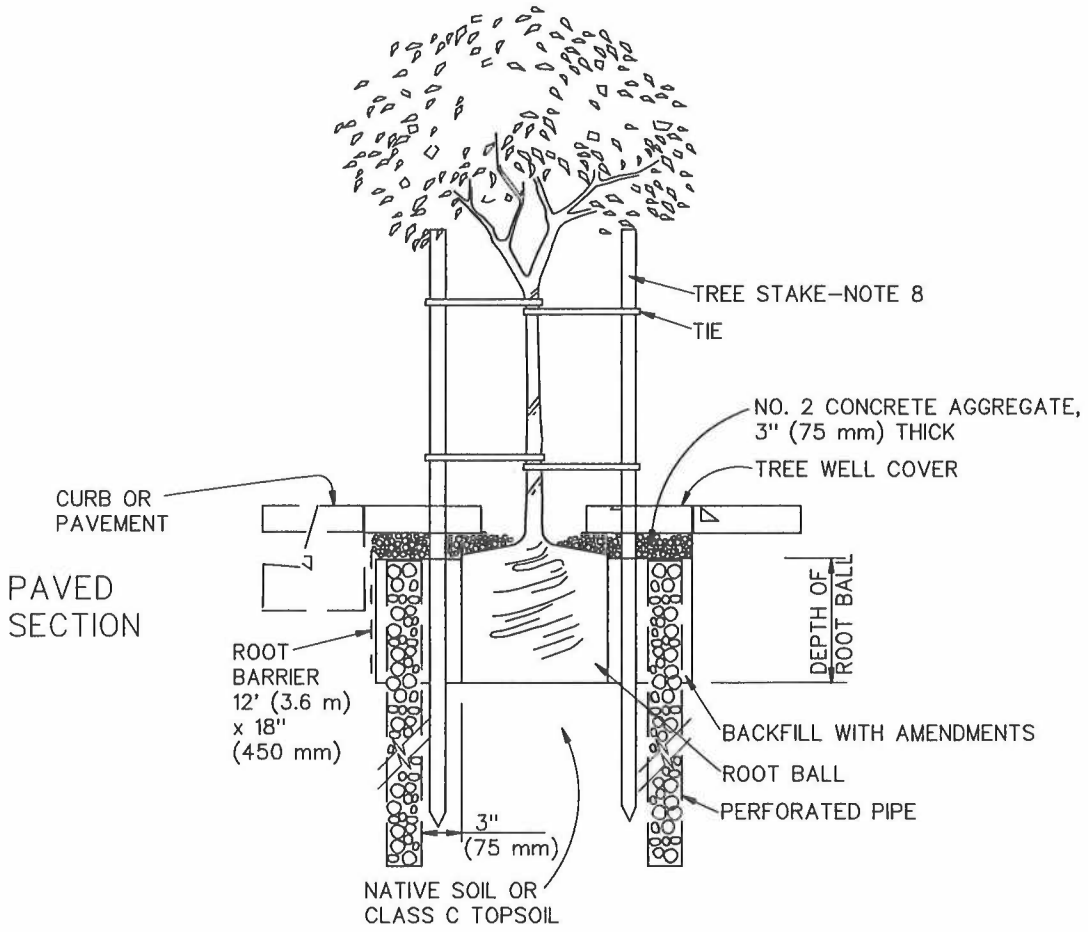

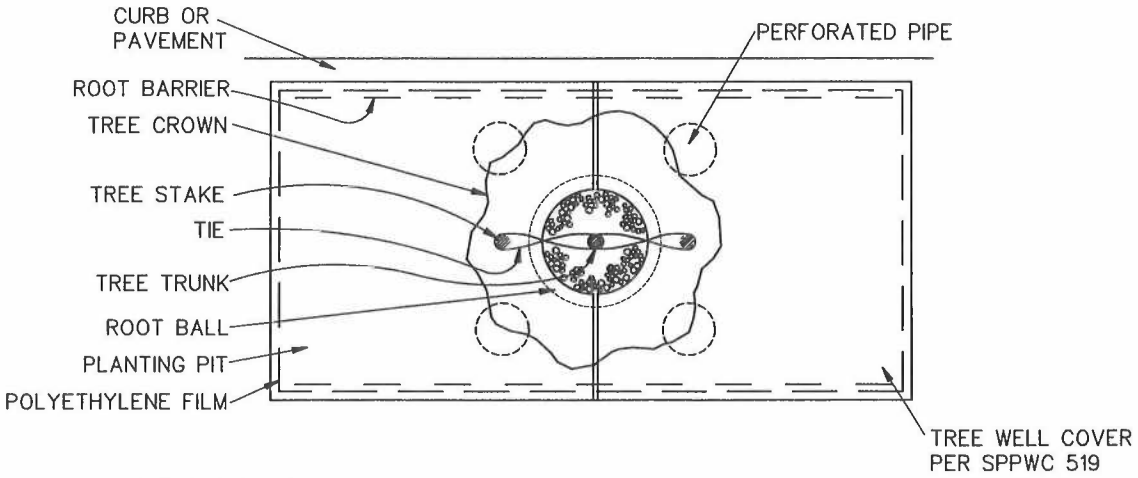

PLAN VIEW

SIDEWALK TREE WELL
15 GAL (55 L) OR 24" (600 mm) BOX

STANDARD PLANS FOR PUBLIC WORKS CONSTRUCTION	STANDARD PLAN
TREE PLANTING	**520–5**
	SHEET 2 OF 4

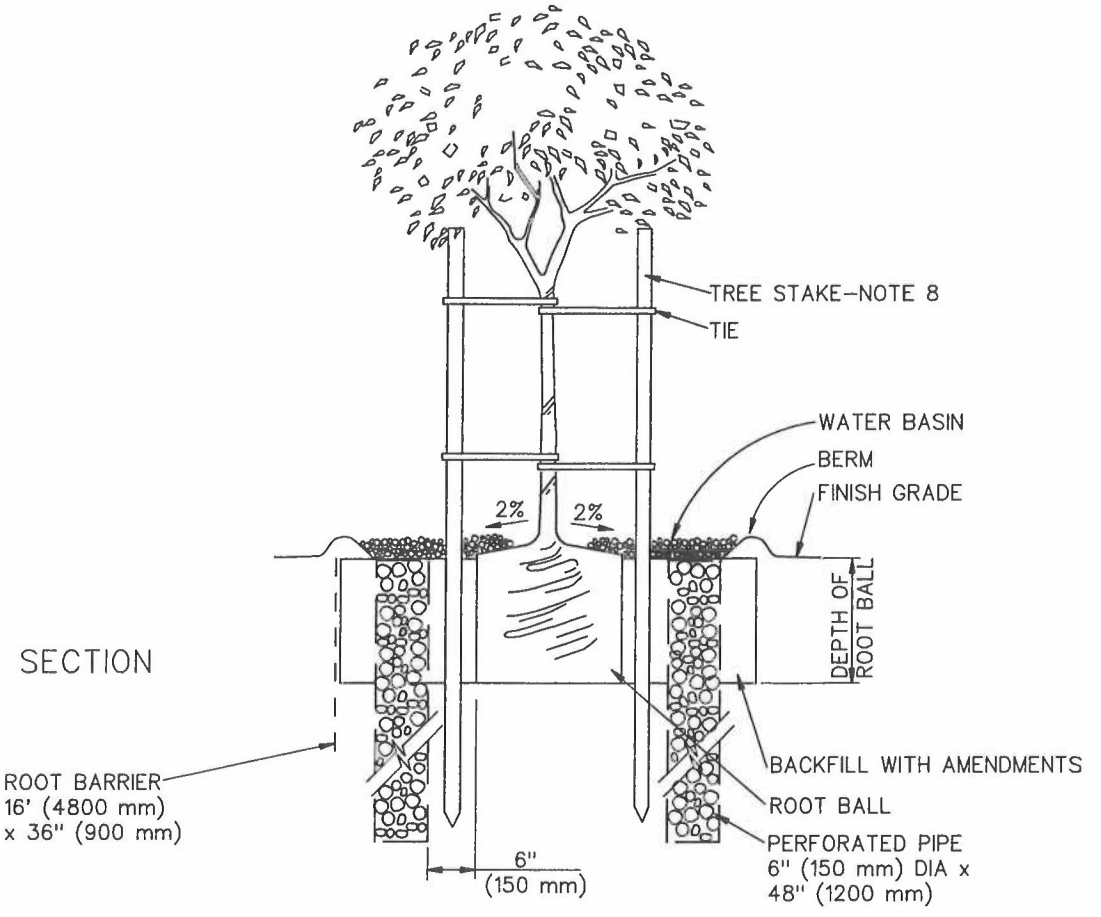

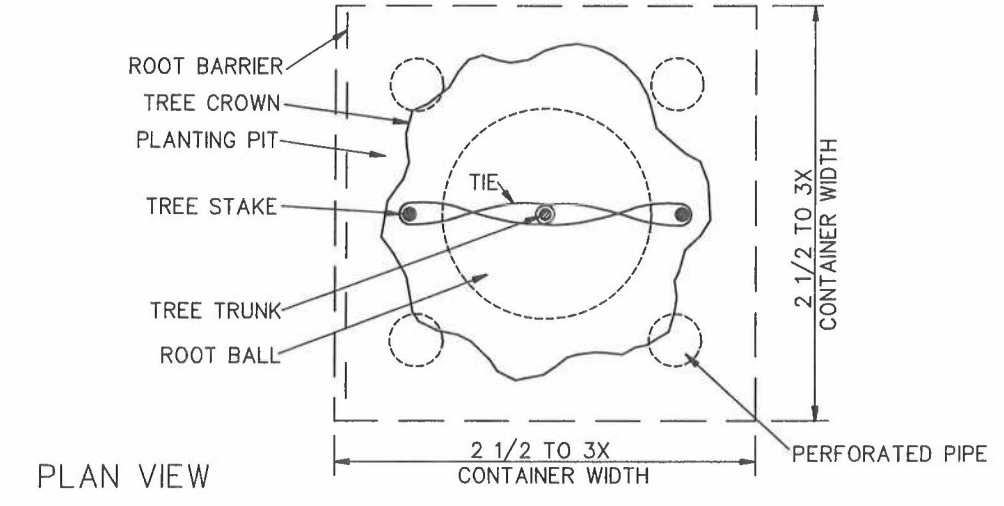

30" (750 mm) TO 48" (1200 mm) BOX

STANDARD PLANS FOR PUBLIC WORKS CONSTRUCTION	STANDARD PLAN
TREE PLANTING	**520–5**
	SHEET 3 OF 4

NOTES:

1. SET TOP OF ROOT BALL 1" (25 mm) ABOVE FINISH GRADE.

2. FOR 24" (600 mm) BOX TREES OR SMALLER, INSTALL ROOT BARRIERS IF TRUNK IS WITHIN 5' (1.5 m) OF CURB OR WALK.
   FOR 30" TO 48" (750 TO 1200 mm) BOX TREES, INSTALL ROOT BARRIERS IF TRUNK IS WITHIN 10' (3.0 m) OF CURB OR WALK.

3. AMEND BACKFILL MIX PER SPECIFICATIONS. LEAVE TRUNK AND ROOT FLARE VISIBLE.

4. SET PERFORATED PIPE FLUSH WITH TOP OF BACKFILL. FILL PIPE WITH NO. 2 CONCRETE AGGREGATE PER SSPWC TABLE 200–1.4 (B) AND COVER WITH FILTER FABRIC. WRAP FABRIC 6" (150 mm) DOWN SIDES OF PIPE.

5. FORM 3 1/2" (90 mm) HIGH BERM AROUND BACKFILL AS A WATER BASIN.

6. TOP WATER BASIN WITH 3 1/2" (90 mm) OF NO. 2 CONCRETE AGGREGATE OR TYPE 1 MULCH PER THE SPECIAL PROVISIONS. KEEP CONCRETE AGGREGATE OR MULCH 3 1/2" (90 mm) CLEAR OF TRUNK. LEAVE TRUNK AND ROOT FLARE VISIBLE.

7. REMOVE ALL NURSERY STAKES.

8. INSTALL NEW TREE STAKES PER SPPWC 518.

9. FASTEN TREE TO STAKES PER 801–4.6, TWO TIES PER STAKE.

10. AFTER PLANTING, PRUNE THE TREE AS APPROVED BY THE ENGINEER.

11. POLYETHYLENE FILM, WHERE SHOWN, SHALL BE 6 MIL (0.15 mm) THICK. LINE ALL FOUR SIDES OF PLANTING PIT.

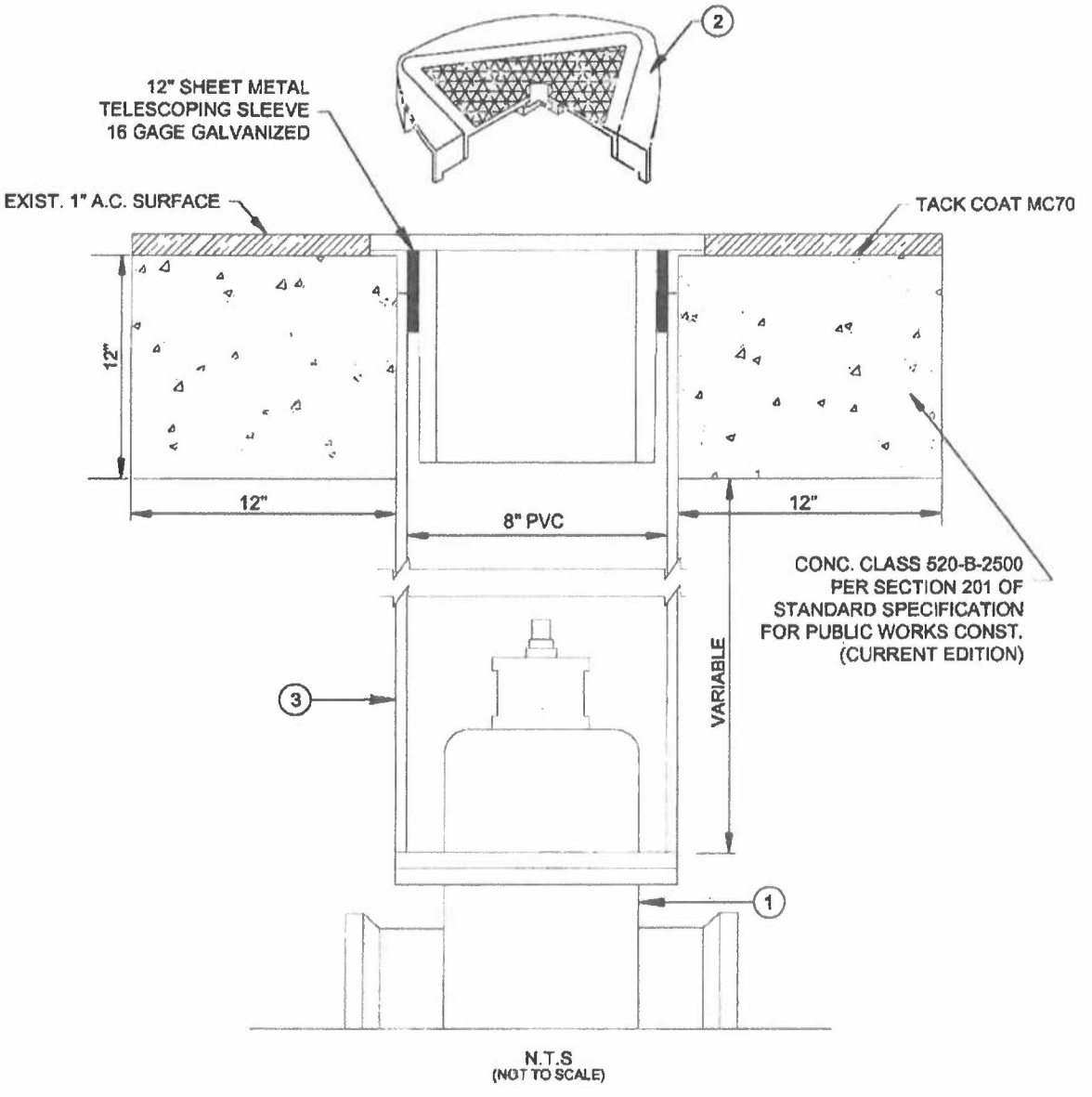

N.T.S
(NOT TO SCALE)

CONSTRUCTION ITEMS / MATERIALS LIST		
NO.	SIZE AND DESCRIPTION	MANUFACTURER
1	GATE VALVE, RESILIENT WEDGE, S.S. TRIM, MJ OR FLG-OPTION	M&H, KENNEDY OR APPROVED EQUAL
2	VALVE BOX FRAME & COVER, C.I.	BROOKS 4TT FOR TRAFFIC USE OR EQUAL
3	PVC PIPE, 8", SCHEDULE 40	

DATE	REV.	DESCRIPTION

CITY OF LA HABRA

STANDARD VALVE BOX INSTALLATION

APPROVED: Christopher L. Johnson DATE: 7/23/12

STANDARD DETAIL W-4

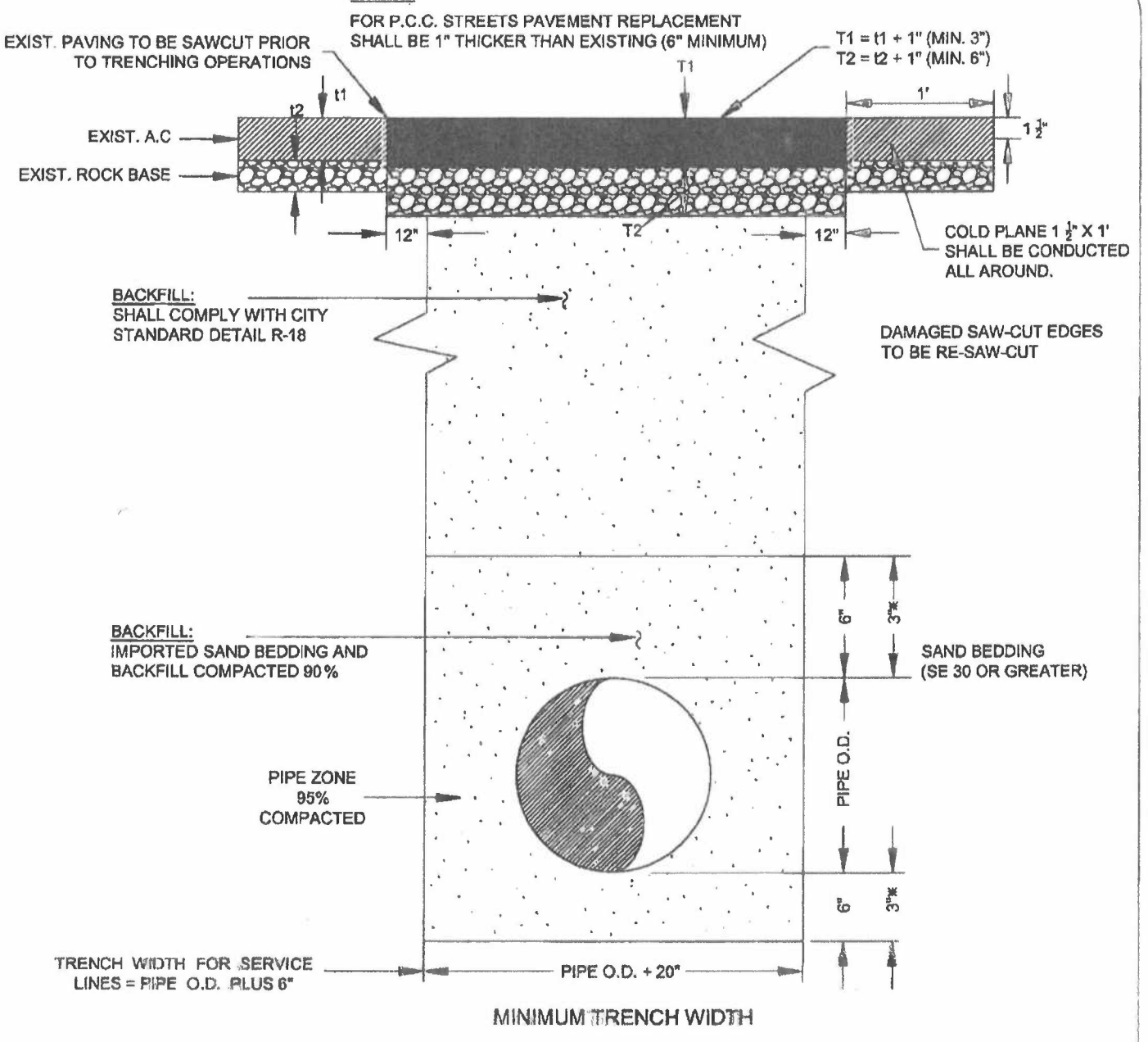

MINIMUM TRENCH WIDTH

WATER MAIN TRENCH DETAIL N.T.S.

NOTE: SPECIAL REQUIREMENTS FOR ARTERIAL STREETS

FOR ALL TRENCH PAVING ON ARTERIAL STREETS, THE A.C. BASE COURSE SHALL BE INITIALLY CONSTRUCTED FLUSH WITH ADJACENT PAVEMENT. FOLLOWING 1-2 WEEKS OF TRAFFIC LOADING, THE CONTRACTOR SHALL GRIND THE TOP 1 1/2" OFF THE TRENCH BASE COURSE AND INSTALL THE SURFACE COURSE

DATE	REV.	DESCRIPTION

NOTE: * = BEDDING AND SHADING FOR DOMESTIC WATER SERVICE/LATERAL LINES

CITY OF LA HABRA

WATER MAIN TRENCH

APPROVED: Christopher L. Jordan DATE: 7/23/12

STANDARD DETAIL W-21

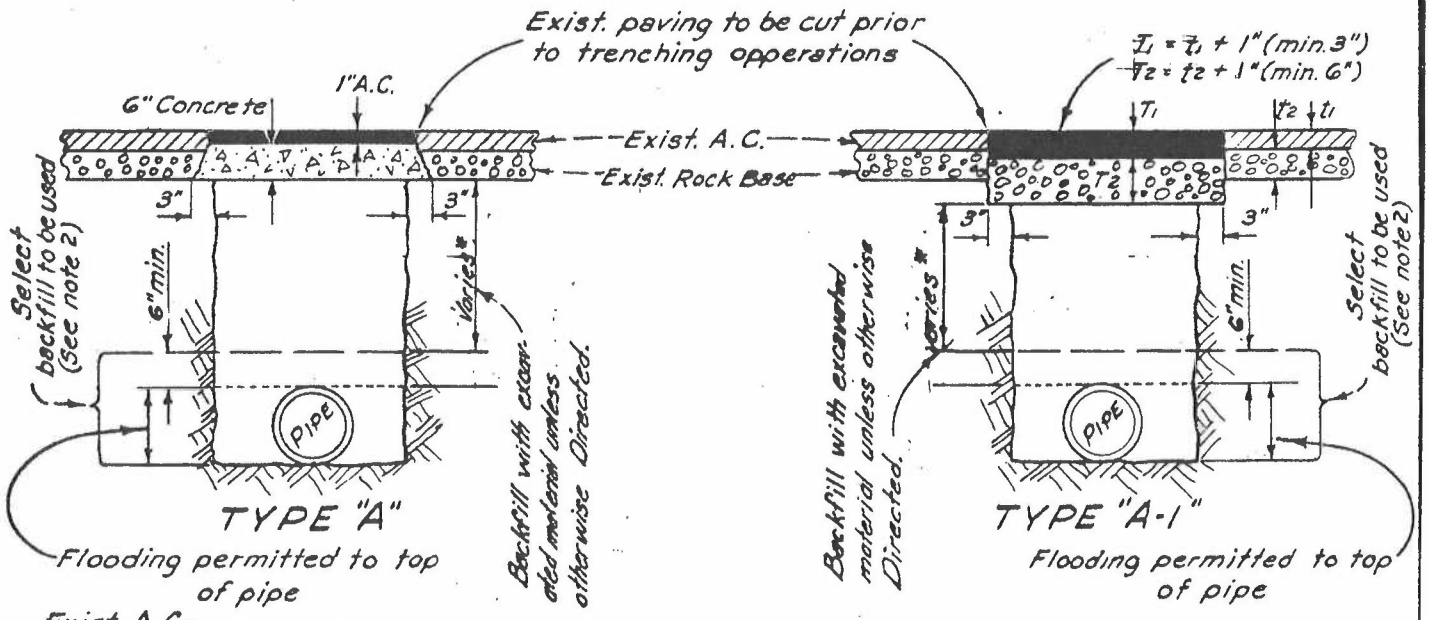

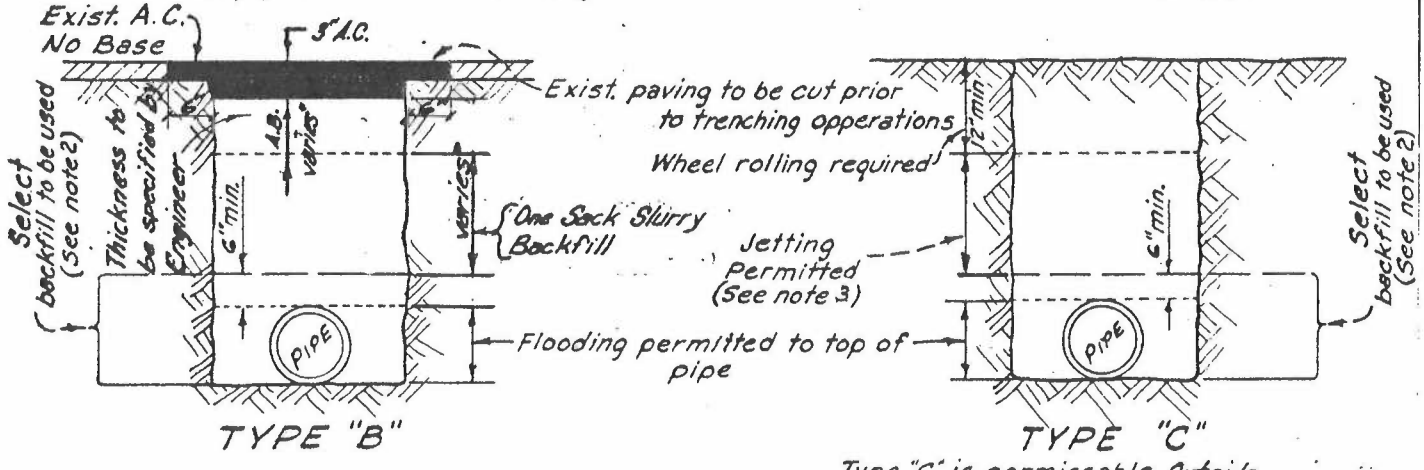

NOTES:

*1. Compaction for Types A, A-1, & B shall be by hydrahammer or pneumatic tamp to attain 90% (Mod.) A.A.S.H.O. density as follows: 2' lifts using hydrahammer; 6" lifts using pneumatic tamp. (See note 5 for sewer pipe exception.)

2. Select material shall be sand, gravel, crushed aggregate or native free-draining granular material having a sand equivalent of 30 or greater and R-Value of 60 or greater.

3. Jetting permitted only where backfill material has a sand equivalent of 30 or greater. An alternate method will be specified by the city when material does not meet specifications for jetting.

4. TIME REQUIREMENTS
   a. All trenches shall be backfilled before close of each day's work or the excavation completely covered or fenced to a height of 4 feet all to satisfaction of the city.
   b. Where trench lies within paved portion of street the paving or installation of "Temporary" 3" thick shall be complete at the end of each workday.

5. Type "A-1" backfill shall be used unless otherwise specified.

6. Vibrator must be used for slurry backfill.

7. Apply Fog Seal consisting of emulsified asphalt SS-1h, at a rate of 0.12 gal. per square yard on all paved surface.

REV.	DATE	DESCRIPTION	BY / APD
3	6-77	REV. NOTES	J.J.L.
2	3-62	ADDED NOTES 1 & 5	H.H.H. / R.P.
1	11-61	MAJOR REVISION, A-1 ADDED	H.H.H. / R.P.

REV. 8-28-85

CITY OF LA HABRA

TRENCH BACKFILL REQUIREMENTS

APPROVED B.R. Pomeroy DATE _____ STANDARD DETAIL R-18

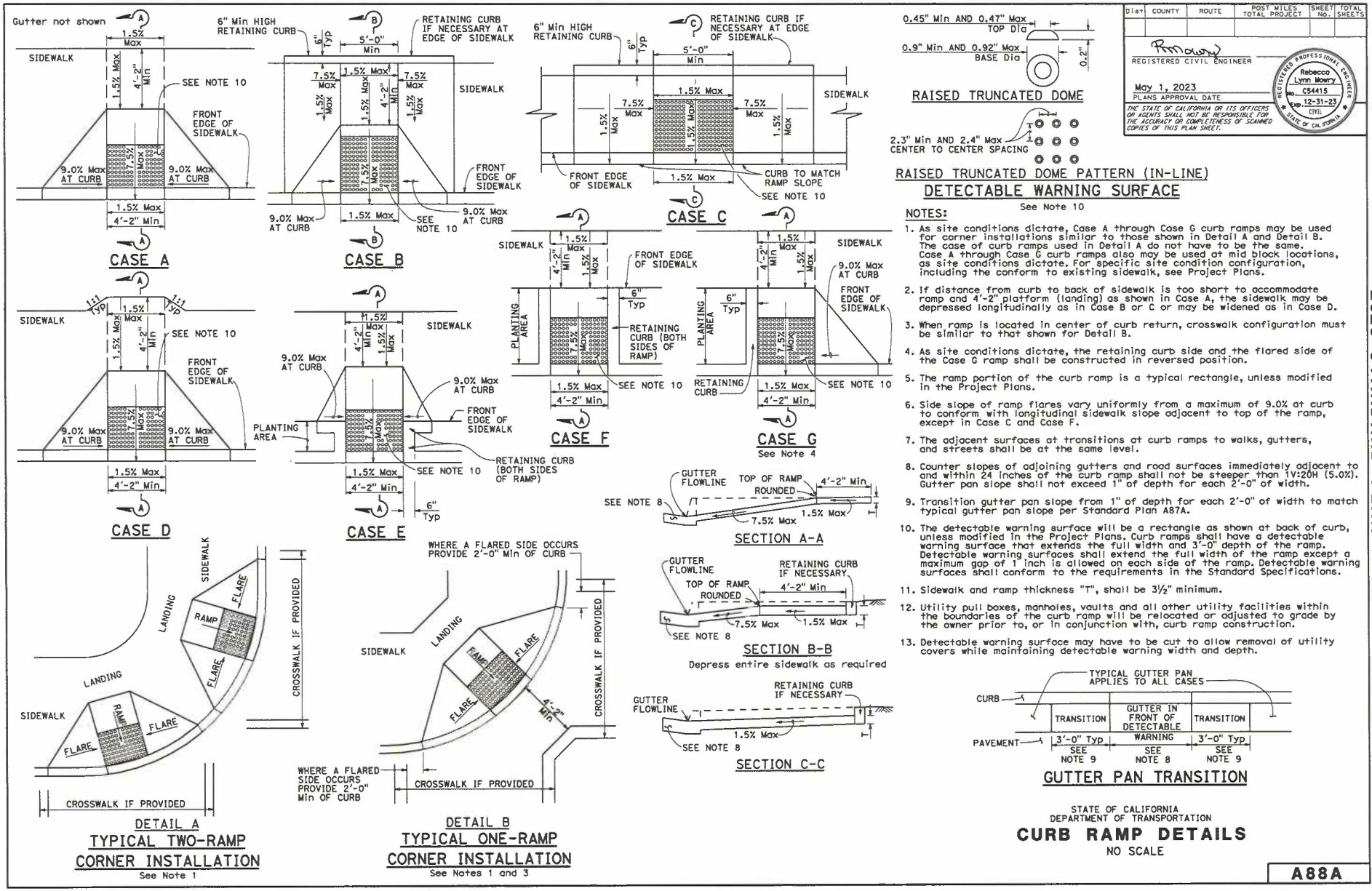

Dist	COUNTY	ROUTE	POST MILES TOTAL PROJECT	SHEET NO.	TOTAL SHEETS

REGISTERED CIVIL ENGINEER

May 1, 2023
PLANS APPROVAL DATE

THE STATE OF CALIFORNIA OR ITS OFFICERS OR AGENTS SHALL NOT BE RESPONSIBLE FOR THE ACCURACY OR COMPLETENESS OF SCANNED COPIES OF THIS PLAN SHEET.

Rebecca Lynn Mowry
No. C54415
Exp. 12-31-23
CIVIL
STATE OF CALIFORNIA

NOTES:

1. As site conditions dictate, Case A through Case G curb ramps may be used for corner installations similar to those shown in Detail A and Detail B. The case of curb ramps used in Detail A do not have to be the same. Case A through Case G curb ramps also may be used at mid block locations, as site conditions dictate. For specific site condition configuration, including the conform to existing sidewalk, see Project Plans.
2. If distance from curb to back of sidewalk is too short to accommodate ramp and 4'-2" platform (landing) as shown in Case A, the sidewalk may be depressed longitudinally as in Case B or C or may be widened as in Case D.
3. When ramp is located in center of curb return, crosswalk configuration must be similar to that shown for Detail B.
4. As site conditions dictate, the retaining curb side and the flared side of the Case G ramp shall be constructed in reversed position.
5. The ramp portion of the curb ramp is a typical rectangle, unless modified in the Project Plans.
6. Side slope of ramp flares vary uniformly from a maximum of 9.0% at curb to conform with longitudinal sidewalk slope adjacent to top of the ramp, except in Case C and Case F.
7. The adjacent surfaces at transitions at curb ramps to walks, gutters, and streets shall be at the same level.
8. Counter slopes of adjoining gutters and road surfaces immediately adjacent to and within 24 inches of the curb ramp shall not be steeper than 1V:20H (5.0%). Gutter pan slope shall not exceed 1" of depth for each 2'-0" of width.
9. Transition gutter pan slope from 1" of depth for each 2'-0" of width to match typical gutter pan slope per Standard Plan A87A.
10. The detectable warning surface will be a rectangle as shown at back of curb, unless modified in the Project Plans. Curb ramps shall have a detectable warning surface that extends the full width and 3'-0" depth of the ramp. Detectable warning surfaces shall extend the full width of the ramp except a maximum gap of 1 inch is allowed on each side of the ramp. Detectable warning surfaces shall conform to the requirements in the Standard Specifications.
11. Sidewalk and ramp thickness "T", shall be 3½" minimum.
12. Utility pull boxes, manholes, vaults and all other utility facilities within the boundaries of the curb ramp will be relocated or adjusted to grade by the owner prior to, or in conjunction with, curb ramp construction.
13. Detectable warning surface may have to be cut to allow removal of utility covers while maintaining detectable warning width and depth.

STATE OF CALIFORNIA
DEPARTMENT OF TRANSPORTATION

CURB RAMP DETAILS

NO SCALE

A88A

1-31-23

2023 STANDARD PLAN A88A

Return to Table of Contents

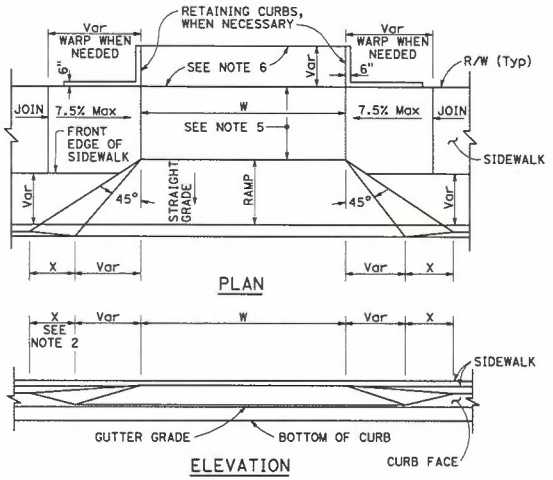

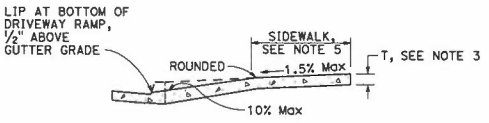

CASE A

Typical driveway, sidewalk not depressed

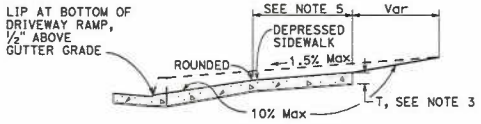

CASE B

Driveway with depressed sidewalk

SECTIONS

TABLE A

CURB TYPE	DIMENSIONS			
	"H1"	"H2"	"W1"	"W2"
A1-6	1'-2"	6"	7½"	1½"
A1-8	1'-4"	8"	8"	2"
A2-6	1'-0"	6"	2'-7½"	1½"
A2-8	1'-2"	8"	2'-8"	2"
A3-6	6"	5"	7¼"	1¼"
A3-8	8"	7"	7¾"	1¾"
B1-4	1'-0"	4"	7½"	2½"
B1-6	1'-2"	6"	9"	4"
B2-4	10"	4"	2'-7½"	2½"
B2-6	1'-0"	6"	2'-9"	4"
B3-4	4"	3"	7"	2"
B3-6	6"	5"	8½"	3½"
D-4	10"	4"	1'-6"	1'-1"
D-6	1'-0"	6"	2'-2"	1'-9"

CURB QUANTITIES

TYPE	CUBIC YARDS PER LINEAR FOOT
A1-6	0.02585
A1-8	0.03084
A2-6	0.05903
A2-8	0.06379
A3-6	0.01036
A3-8	0.01435
B1-4	0.02185
B1-6	0.02930
B2-4	0.05515
B2-6	0.06171
B3-4	0.00641
B3-6	0.01074
B4	0.05709
D-4	0.04083
D-6	0.06804
E	0.06661

DRIVEWAYS

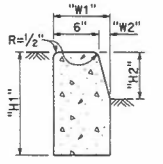

TYPE A1 CURBS

See Table A

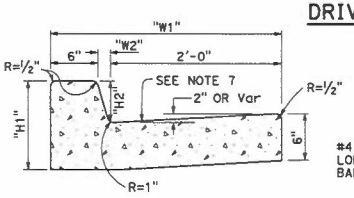

TYPE A2 CURBS

See Table A

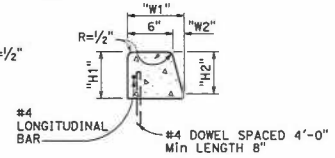

TYPE A3 CURBS

Superimposed on existing pavement
See Table A

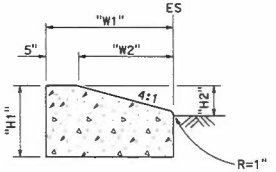

TYPE D CURBS

See Table A

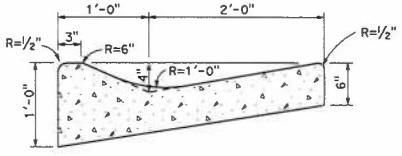

TYPE E CURB

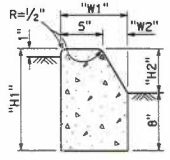

TYPE B1 CURBS

See Table A

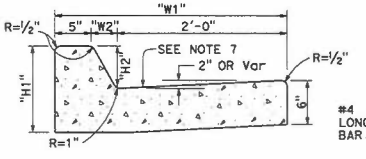

TYPE B2 CURBS

See Table A

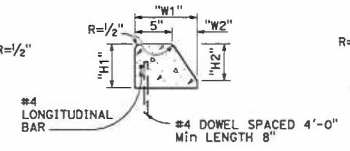

TYPE B3 CURBS

Superimposed on existing pavement
See Table A

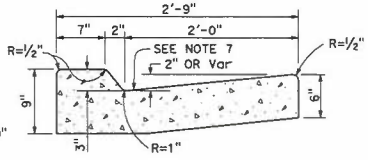

TYPE B4 CURBS

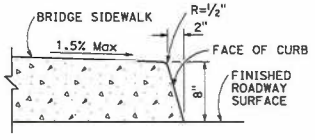

TYPE H CURB

On Bridges

CURBS

NOTES:

1. Case A driveway section typically applies.
2. X=3'-0" except for curb heights over 10" where 4:1 slopes shall be used on curb slope.
3. Sidewalk and ramp thickness "T" at driveway shall be 4" for residental and 6" for commercial.
4. Difference in slope of the driveway ramp and the slope of a line between the gutter and a point on the roadway 5'-0" from gutter line shall not exceed 15%. Reduce driveway ramp slope, not gutter slope, where required.
5. Minimum width of clear passageway for sidewalk shall be 4'-2".
6. Retaining curbs and acquisition of construction easement may be necessary for narrow sidewalks or curb heights in excess of 6".
7. Across the pedestrian route at curb ramp locations, the gutter pan slope shall not exceed 1" of depth for each 2'-0" of width.

Dist	COUNTY	ROUTE	POST MILES TOTAL PROJECT	SHEET No.	TOTAL SHEETS

REGISTERED CIVIL ENGINEER

May 1, 2023
PLANS APPROVAL DATE

THE STATE OF CALIFORNIA OR ITS OFFICERS OR AGENTS SHALL NOT BE RESPONSIBLE FOR THE ACCURACY OR COMPLETENESS OF SCANNED COPIES OF THIS PLAN SHEET.

REGISTERED PROFESSIONAL ENGINEER
Hector David Cordova
No. C41957
Exp. 3-31-24
CIVIL
STATE OF CALIFORNIA

STATE OF CALIFORNIA
DEPARTMENT OF TRANSPORTATION

CURBS AND DRIVEWAYS

NO SCALE

A87A

1-31-23

2023 STANDARD PLAN A87A

Return to Table of Contents

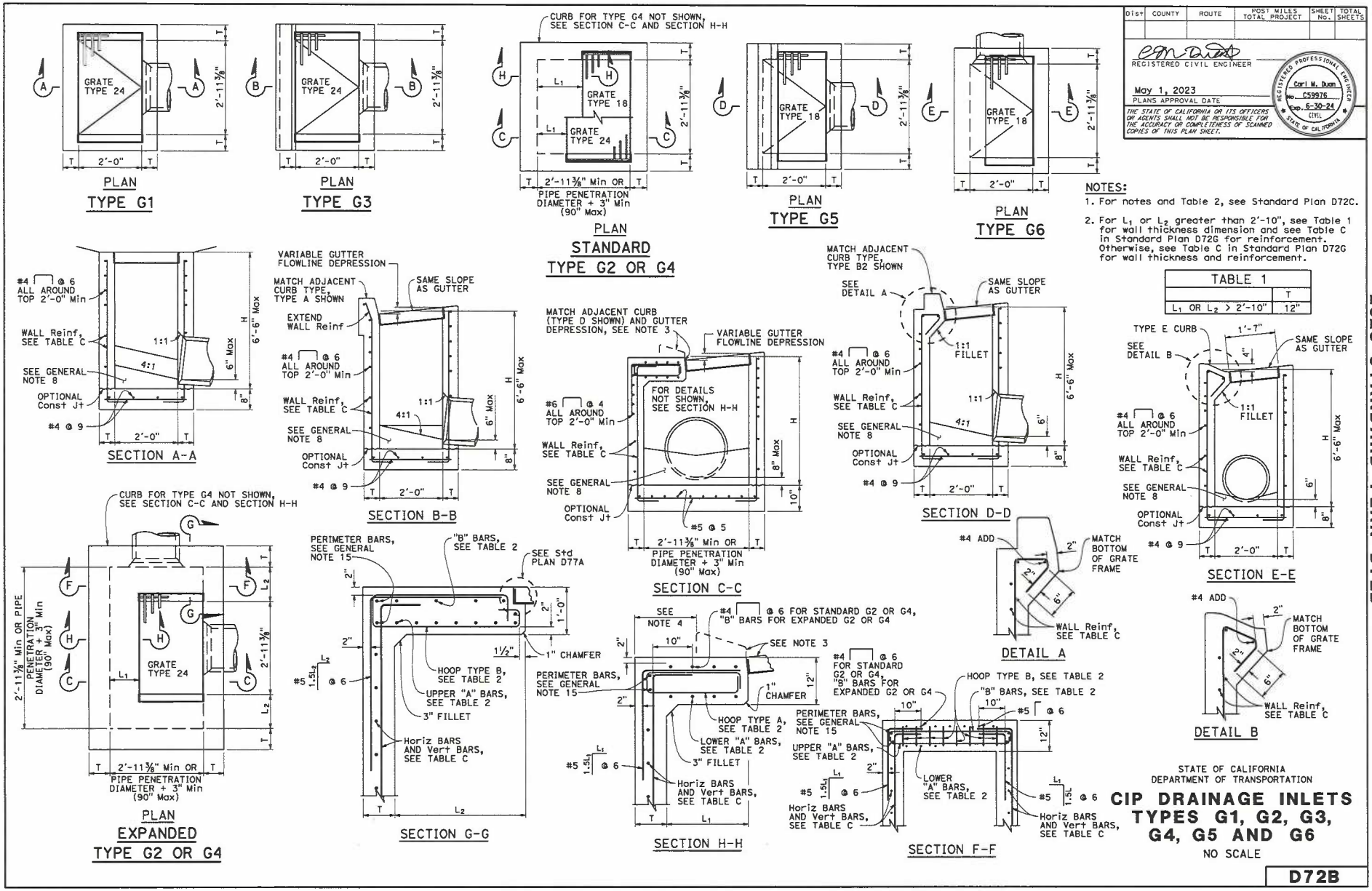
GRATE TYPE 24
PLAN
TYPE G1
PLAN
TYPE G3
CURB FOR TYPE G4 NOT SHOWN, SEE SECTION C-C AND SECTION H-H
GRATE TYPE 18
GRATE TYPE 24
PIPE PENETRATION DIAMETER + 3" Min (90° Max)
PLAN
STANDARD
TYPE G2 OR G4
PLAN
TYPE G5
PLAN
TYPE G6
NOTES:
1. For notes and Table 2, see Standard Plan D72C.
2. For L1 or L2 greater than 2'-10", see Table 1 for wall thickness dimension and see Table C in Standard Plan D72G for reinforcement. Otherwise, see Table C in Standard Plan D72G for wall thickness and reinforcement.
TABLE 1
L1 OR L2 > 2'-10" | T 12"
SECTION A-A
SECTION B-B
SECTION C-C
SECTION D-D
SECTION E-E
DETAIL A
DETAIL B
SECTION G-G
SECTION H-H
SECTION F-F
PLAN
EXPANDED
TYPE G2 OR G4
STATE OF CALIFORNIA
DEPARTMENT OF TRANSPORTATION
CIP DRAINAGE INLETS
TYPES G1, G2, G3,
G4, G5 AND G6
NO SCALE
D72B
2023 STANDARD PLAN D72B
209
Return to Table of Contents

Dist	COUNTY	ROUTE	POST MILES TOTAL PROJECT	SHEET No.	TOTAL SHEETS

REGISTERED CIVIL ENGINEER

May 1, 2023
PLANS APPROVAL DATE

THE STATE OF CALIFORNIA OR ITS OFFICERS OR AGENTS SHALL NOT BE RESPONSIBLE FOR THE ACCURACY OR COMPLETENESS OF SCANNED COPIES OF THIS PLAN SHEET.

REGISTERED PROFESSIONAL ENGINEER
Carl W. Dunn
No. C59976
Exp. 6-30-24
CIVIL
STATE OF CALIFORNIA

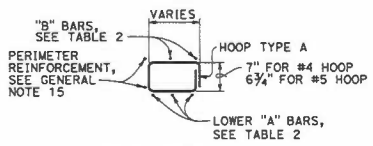

HOOP TYPE A

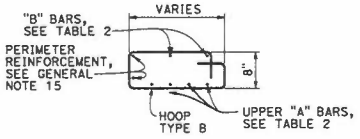

HOOP TYPE B

NOTES:

1. See Standard Plan D72F for General Notes and additional details. See Standard Plan D72G for tables and quantities.
2. Type G4 inlet can use Grate Type 18 or 24. Type G2 inlet uses Grate Type 24.
3. Type G4 inlet details are similar to Type G2 inlet details, except for the addition of a curb and sloped grate to match the adjacent curb and gutter depression.
4. Dimension will vary with different grates, curb types, box width and wall thickness.

TABLE 2 - TOP SLAB REINFORCEMENT

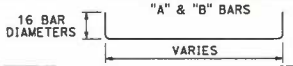

	W/ CURB	W/O CURB
"A" BARS	#4 @ 5 (2 BARS Min)	#5 @ 5 (3 BARS Min)
"B" BARS	#4 @ 10 (2 BARS Min)	#4 @ 12 (2 BARS Min)
HOOPS ("A" & "B")	#4 @ 5	#5 @ 5

ROTATE "A" AND "B" BARS SO HOOKED ENDS WILL MAINTAIN 2" CLEAR COVERAGE.

STATE OF CALIFORNIA
DEPARTMENT OF TRANSPORTATION

CIP DRAINAGE INLETS TYPES G1, G2, G3, G4, G5 AND G6

NO SCALE

D72C

2-9-23

Return to Table of Contents

Dist	COUNTY	ROUTE	POST MILES TOTAL PROJECT	SHEET No.	TOTAL SHEETS

REGISTERED CIVIL ENGINEER

May 1, 2023
PLANS APPROVAL DATE

THE STATE OF CALIFORNIA OR ITS OFFICERS OR AGENTS SHALL NOT BE RESPONSIBLE FOR THE ACCURACY OR COMPLETENESS OF SCANNED COPIES OF THIS PLAN SHEET.

REGISTERED PROFESSIONAL ENGINEER
Carl M. Buan
No. C59976
Exp. 6-30-24
CIVIL
STATE OF CALIFORNIA

GENERAL NOTES:

1. "H" is measured from top of bottom slab to the normal gutter grade line undepressed at the curb face.
2. For "T" wall thickness and reinforcement, see Table C on Standard Plan D72G.
3. Wall reinforcement must be placed in the center of the wall thickness with horizontal bars placed on the exterior face. Bottom slab concrete cover must be 3" clear on the interior face unless otherwise noted. Top slab concrete cover must be 2" clear on the exterior face unless otherwise noted. Reinforcement spacing is in inches unless otherwise noted.
4. Steps - None required where "H" is less than 2'-6". Where "H" is 2'-6" or more, install steps with lowest rung 1'-0" above the floor and highest rung not more than 6" below bottom of lid. The distance between steps must not exceed 1'-0" and be uniform throughout the length of the wall. Place steps in the wall without an opening. Steps inserts may be substituted for the bar steps. Step inserts must comply with State Industrial Safety Requirements. See Standard PlaN D74 for step details.
5. Pipe(s) can be placed in any wall. Adjacent to each side of the opening, place additional reinforcement equivalent to half the interupted main reinforcement. For larger pipes greater than or equal to 42" diameter, also add 4 diagonal bars, 1 bar each side. Bars must be the same size as the larger of the main vertical or horizontal bars. Extend bars one development length past the intersection with the adjacent diagonal bar, or where bars intersect mid thickness of adjacent wall bottom or top of non-continuous wall, bend ends as required into same plane.
6. Set inlet so that grate bars are parallel to direction of principal surface flow.
7. Curb section must match adjacent curb.
8. Except for inlets used as junction boxes, basin floors must have wood trowel finish and a minimum slope of 4:1, unless otherwise noted, from all directions toward outlet pipe by casting grout fill on top of the bottom slab. The additional volume to achieve the 4:1 slope may also be achieved by casting the bottom slab and fill as a composite concrete element.
9. See Standard Plans D77A and D77B for grate and frame details and weights of miscellaneous iron and steel.
10. See Standard Plans D78A and D78B for gutter depression details.
11. See Standard PlanS A87A and A87B for curb and dike details.
12. Details shown apply to metal, concrete and plastic pipe(s).
13. The Contractor may use WWR instead of bar reinforcement. The ratio of bar reinforcement to WWR shall be based on the yield strength ratio.
14. Cast-in-place (CIP) inlets to be formed around all pipes/stubs intersecting the inlet, and concrete poured in one continuous operation.
15. Perimeter reinforcement must not be smaller than main bars and #4 and serves as a rigid frame to position and attach the required structural reinforcement and may be tack welded at outer corners when using ASTM A706 weldable bars.

DESIGN NOTES:

1. Design Specifications: AASHTO LRFD Bridge Design Specifications, 6th edition with 2012 Interims and Errata and CA Amendments.
2. Live Load (AASHTO LRFD 3.6.1.2):
   HL-93$_s$ consists of design truck or tandem, and design lane load.
   Dynamic Load Allowance, IM = 33%
   Multiple Presence Factor, m = 1.0
   Design lane load was excluded in Top Slab design.
   A wheel load of 8 kips without impact factor was used for top slabs that are above a curb.
3. Earth Load:
   Vertical pressure = 140 pcf
   Lateral pressure:
   = 100 pcf for walls with flat embankment
   = 140 pcf For walls with slope embankment, 1.5:1 Max
4. Downdrag: ϕ = 34°and γ_E = 120 pcf.
5. Buoyancy: γ_w = 62.4 pcf to finished grade
6. Reinforced Concrete: f'c = 3.6 ksi, fy = 60.0 ksi.
7. Soil pressures shown are factored per AASHTO LRFD and include self-weight, live load and downdrag.

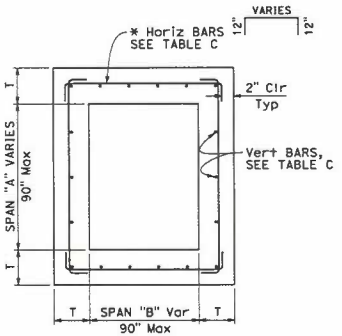

TYPICAL INLET PLAN

* ALTERNATIVE HORIZONTAL BARS

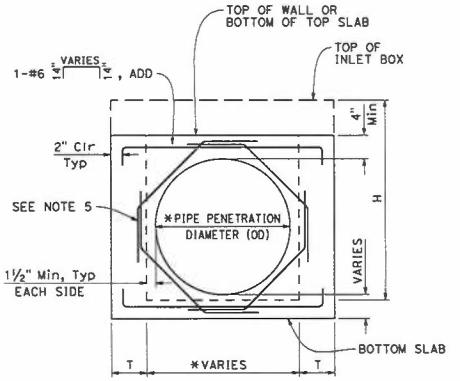

TYPICAL WALL W/ PIPE OPENING

* SEE "SKEWED PIPE PLAN"

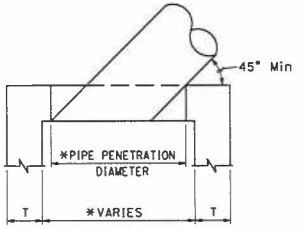

SKEWED PIPE PLAN

* ADJUST PIPE PENETRATION AND BOX WIDTH FOR SKEWED PIPES.

STATE OF CALIFORNIA
DEPARTMENT OF TRANSPORTATION

CIP DRAINAGE INLET NOTES

NO SCALE

D72F

2023 STANDARD PLAN D72F

2-9-23

Return to Table of Contents

Dist	COUNTY	ROUTE	POST MILES TOTAL PROJECT	SHEET No.	TOTAL SHEETS

REGISTERED CIVIL ENGINEER

May 1, 2023
PLANS APPROVAL DATE

THE STATE OF CALIFORNIA OR ITS OFFICERS OR AGENTS SHALL NOT BE RESPONSIBLE FOR THE ACCURACY OR COMPLETENESS OF SCANNED COPIES OF THIS PLAN SHEET.

REGISTERED PROFESSIONAL ENGINEER
Carl W. Dunn
No. C59876
Exp. 6-30-24
CIVIL
STATE OF CALIFORNIA

TABLE A - CONCRETE QUANTITIES

TYPE	H=3'-0" TO 8'-0"		H=8'-1" TO 20'-0"	
	H=3'-0" (CY)	ADDITIONAL CONCRETE PER FOOT (CY)	H=8'-1" (CY)	ADDITIONAL CONCRETE PER FOOT (CY)
G1	0.95	0.220	SEE NOTE 2	SEE NOTE 2
G2*	2.00	0.411	5.11	0.525
G3	1.03	0.220	SEE NOTE 2	SEE NOTE 2
G4 (TYPE 18)*	2.02	0.411	5.14	0.525
G4 (TYPE 24)*	1.99	0.411	5.10	0.525
G5	1.02	0.220	SEE NOTE 2	SEE NOTE 2
G6	1.04	0.220	SEE NOTE 2	SEE NOTE 2
OS	1.53	0.278	5.08	0.504
OL7	2.06	0.278	6.17	0.566
OL10	2.85	0.278	6.85	0.566
OL14	3.81	0.278	7.78	0.566
OL21	5.71	0.278	9.62	0.566
GOL7	2.48	0.313	6.89	0.630
GOL10	3.41	0.313	7.85	0.630
GT1	1.72	0.248	SEE NOTE 2	SEE NOTE 2
GT2	2.93	0.530	7.73	0.762
GT3	1.74	0.348	SEE NOTE 2	SEE NOTE 2
GT4	2.83	0.530	7.62	0.762
GO	1.26	0.245	4.90	0.506
GDO	1.74	0.322	6.33	0.647

* Quantities are based on the minimum interior dimensions.

TABLE B - REINFORCEMENT QUANTITIES

TYPE	H=3'-0" TO 8'-0"		H=8'-1" TO 20'-0"	
	H=3'-0" (LB)	ADDITIONAL REINFORCEMENT PER FOOT (LB)	H=8'-1" (LB)	ADDITIONAL REINFORCEMENT PER FOOT (LB)
G1	118	22.20	SEE NOTE 2	SEE NOTE 2
G2*	729	86.48	1794	171.79
G3	118	22.20	SEE NOTE 2	SEE NOTE 2
G4 (TYPE 18)*	647	86.48	1675	171.79
G4 (TYPE 24)*	647	86.48	1675	171.79
G5	118	22.20	SEE NOTE 2	SEE NOTE 2
G6	118	22.20	SEE NOTE 2	SEE NOTE 2
OS	245	49.88	1057	120.77
OL7	458	50.53	1324	126.75
OL10	729	50.53	1595	126.75
OL14	982	50.53	1849	126.75
OL21	1453	50.53	2320	126.75
GOL7	644	83.57	1969	148.79
GOL10	883	83.57	2208	148.79
GT1	486	96.91	SEE NOTE 2	SEE NOTE 2
GT2	1040	117.08	2543	233.37
GT3	486	96.91	SEE NOTE 2	SEE NOTE 2
GT4	1001	117.08	2556	237.88
GO	308	32.44	1013	96.56
GDO	519	57.09	1654	165.66

* Quantities are based on the minimum interior dimensions.

TABLE D

INLET	CURB USED IN QUANTITIES
G1	-
G2	-
G3	A1-6
G4 (Type 18)	A1-6
G4 (Type 24)	A1-6
G5	B1-4
G6	½E
OS	-
OL7	-
OL10	-
OL14	-
OL21	-
GOL7	-
GOL10	-
GT1	D-6
GT2	E
GT3	A2-8
GT4	A2-8
GO	-
GDO	-

TABLE C - WALL REINFORCEMENT

TYPE	H≤8 (T=6",UON)		8<H≤20 (T=11",UON)	
	HORIZ	VERTICAL	HORIZ	VERTICAL
OS	#4 @ 8	#4 @ 6	#5 @ 6	#6 @ 4.5
OL	#4 @ 6	#4 @ 6	#5 @ 6	#6 @ 4.5
GOL	#5 @ 6	#5 @ 8	#6 @ 5	#6 @ 4.5
G1 (H≤6-6")	#3 @ 6	#3 @ 6	-	-
G2	T=9" #5 @ 5	#5 @ 5	T=11" #6 @ 4	#6 @ 4.5
G3 (H≤6-6")	#3 @ 6	#3 @ 6	-	-
G4	T=9" #5 @ 5	#5 @ 5	T=11" #6 @ 4	#6 @ 4.5
G5 (H≤6-6")	#3 @ 6	#3 @ 6	-	-
G6 (H≤6-6")	#3 @ 6	#3 @ 6	-	-
GT1 (H≤6-6")	#5 @ 6	#5 @ 6	-	-
GT2	T=8" #5 @ 6	#5 @ 6	#6 @ 4	#6 @ 4.5
GT3 (H≤6-6")	#5 @ 6	#5 @ 6	-	-
GT4	T=8" #5 @ 6	#5 @ 6	#6 @ 4	#6 @ 4.5
GO	#4 @ 9	#4 @ 6	#4 @ 6	#6 @ 4.5
GDO	#4 @ 6	#4 @ 6	#5 @ 4	#6 @ 4.5

TABLE E

SOIL PRESSURE BELOW BASE SLAB (ksf)		
TYPE	H=8'-0"	8'-0"< H ≤20'-0"
OS	2.93	5.56
OL*	2.93	5.56
GOL*	2.50	5.06
G1	3.67	-
G2	2.99	5.91
G3	3.67	-
G4	2.99	5.91
G5	3.67	-
G6	3.67	-
GT1	3.66	-
GT2	3.91	6.07
GT3	3.86	-
GT4	3.91	6.07
GO	3.42	6.11
GDO	2.52	6.95

* Main Box

NOTES:

1. No deduction or adjustment was made to the quantities of concrete and reinforcement for pipe openings, floor alternatives or curb type.
2. Maximum allowable height is 6'-6".
3. Quantities are approximate and for design purposes only.
4. Design is based on envelope of level and sloped ground.

STATE OF CALIFORNIA
DEPARTMENT OF TRANSPORTATION

CIP DRAINAGE INLET TABLES

D72G

2023 STANDARD PLAN D72G

7-9-23

Return to Table of Contents

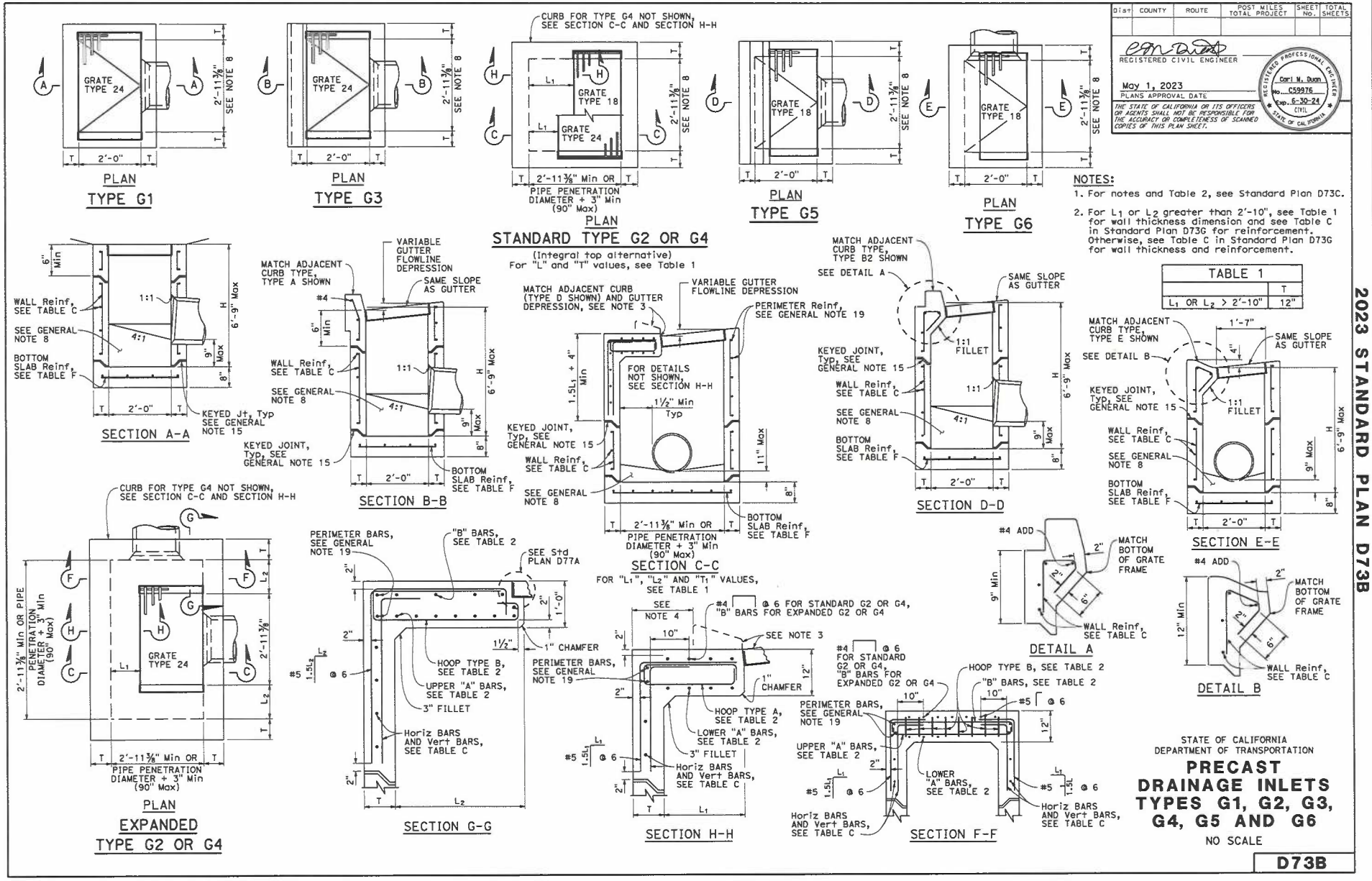

Return to Table of Contents

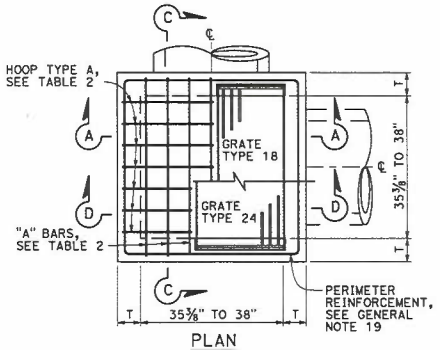

PLAN

STANDARD TYPE G2 OR G4

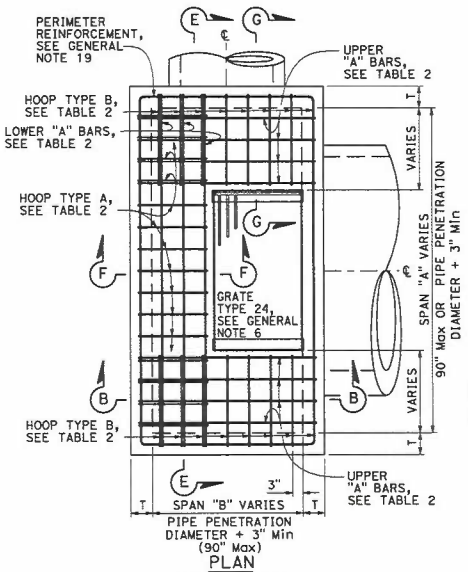

PLAN

EXPANDED TYPE G2 OR G4

(Top rebar not shown)

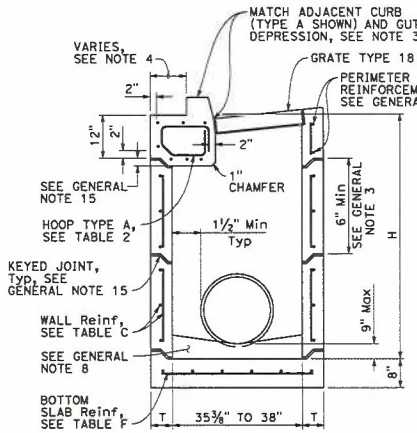

SECTION A-A

(With G4 Top)

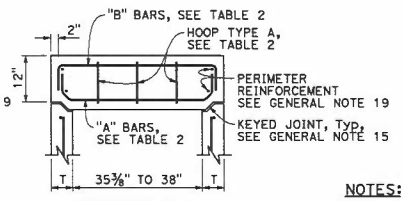

SECTION C-C

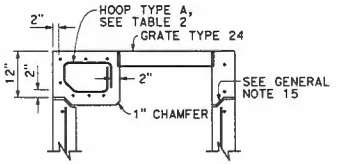

SECTION D-D

(With G2 Top)

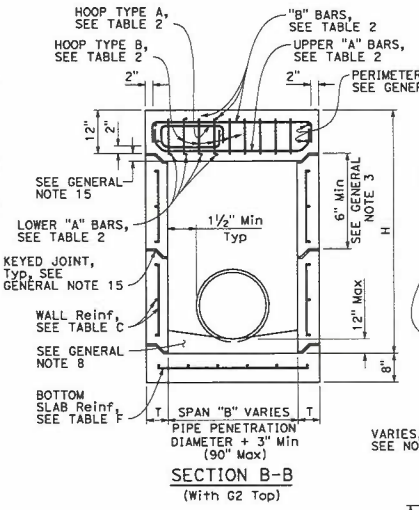

SECTION B-B

(With G2 Top)

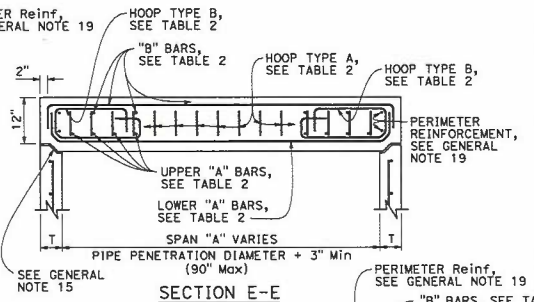

SECTION E-E

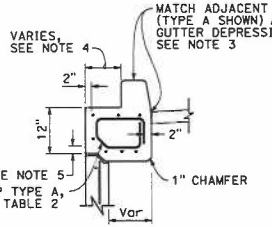

SECTION F-F

(With G4 Top)

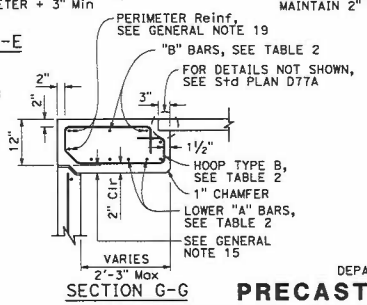

SECTION G-G

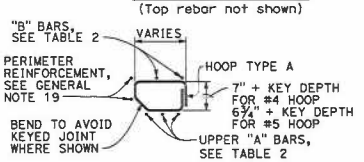

HOOP TYPE A

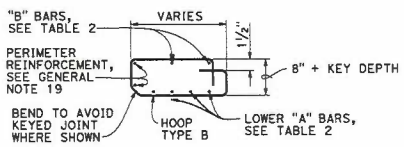

HOOP TYPE B

NOTES:

1. See Standard Plan D73F for General Notes and additional details. See Standard Plan D73G for additional tables, wall thickness "T" and quantities.
2. Type G4 inlet can use Grate Type 18 or 24. Type G2 inlet uses Grate Type 24.
3. G4 inlet details are the same as the G2 with the addition of a curb and sloped grate that matches the adjacent curb and gutter depression.
4. Dimension will vary with different grates, curb types, box width and wall thickness.
5. 2" unless inlet is expanded in the Span "A" direction, then clearance is 2" plus the diameter of the lower "A" bar.
6. See Standard Plan D73B for integral top slab alternative.
7. Interior dimension of lower sections of inlet for Types G2 and G4 may be 3'-0" provided top section conforms to the requirements for frame and grate types on Standard Plan D77A. The wall thickness of top sections may transition from "T" to "T"+5/8" to meet this requirement. Minimum height of thickened wall shall = "T".

TABLE 2 - TOP SLAB REINFORCEMENT

16 BAR DIAMETERS — "A" & "B" BARS — VARIES — BEND TO AVOID KEYED JOINT WHERE SHOWN

	W/ CURB	W/O CURB
"A" BARS	#4 @ 5 (2 BARS Min)	#5 @ 5 (3 BARS Min)
"B" BARS	#4 @ 10 (2 BARS Min)	#4 @ 10 (2 BARS Min)
HOOPS ("A" & "B")	#4 @ 5	#5 @ 5

ROTATE "A" AND "B" BARS SO HOOKED ENDS WILL MAINTAIN 2" CLEAR COVERAGE.

Dist	COUNTY	ROUTE	POST MILES TOTAL PROJECT	SHEET No.	TOTAL SHEETS

REGISTERED CIVIL ENGINEER

May 1, 2023
PLANS APPROVAL DATE

Carl W. Duon, No. C59976, Exp. 6-30-24, CIVIL, REGISTERED PROFESSIONAL ENGINEER, STATE OF CALIFORNIA

THE STATE OF CALIFORNIA OR ITS OFFICERS OR AGENTS SHALL NOT BE RESPONSIBLE FOR THE ACCURACY OR COMPLETENESS OF SCANNED COPIES OF THIS PLAN SHEET.

STATE OF CALIFORNIA
DEPARTMENT OF TRANSPORTATION

PRECAST DRAINAGE INLETS TYPES G1, G2 G3, G4, G5 AND G6

NO SCALE

D73C

2023 STANDARD PLAN D73C

2-9-23

Return to Table of Contents

APPENDIX “C”

CALTRANS ENCROACHMENT PERMIT
No. 1222-NSN-0324

STATE OF CALIFORNIA · DEPARTMENT OF TRANSPORTATION

ENCROACHMENT PERMIT

TR-0120 (REV. 6/2012)

Permit No.	12-22-N-SN-0324
Dist/Co/Rte/PM	12-ORA-39, PM 21.97
Permit Approval Date	04/22/2022
Fee Paid	$ EXEMPT
Deposit	$ EXEMPT
Performance Bond Amount (1)	$ 0.00
Payment Bond Amount (2)	$ 0.00
Bond Company	
Bond Number (1)	
Bond Number (2)	

In compliance with (Check one):

- ☒ Your application of March 23, 2022
- ☐ Utility Notice No. _____ of _____
- ☐ Agreement No. _____ of _____
- ☐ R/W Contract No. _____ of _____

TO:

City of La Habra (Tony An)
110 East La Habra Boulevard, La Habra, California 90631
Attn: (562) 383-4158

, PERMITTEE

and subject to the following, PERMISSION IS HEREBY GRANTED to:

Install 6 traffic loops detectors on Euclid , install two (2) Type F (Bike) Loop Detectors per Caltrans Standard Plan RSP ES-5B and four (4) Type E Loop Detectors per Caltrans Standard Plan RSP ES-5B on Whittier Blvd at Euclid St in the City of La Habra.

All performed work shall be in accordance with current Caltrans Standard Specifications and Standard Plans, Section 500 (Specific Permits) of the Encroachment Permits Manual, California MUTCD latest edition, the attached Provisions and Permit Plans stamp - dated 4-21-22.

Permittee its contractor shall contact JUAN DE LIRA ,State Construction Engineer, at (657) 328-6249, a minimum of SEVEN working days prior to the start of work to schedule a pre-job meeting at the earliest mutually agreeable time and 48 hours prior to subsequent restart of work when your schedule is interrupted. Failure to comply with this requirement will result in suspension of this permit.

THIS PERMIT IS NOT A PROPERTY RIGHT AND DOES NOT TRANSFER WITH THE PROPERTY TO A NEW OWNER.

The following attachments are also included as part of this permit *(Check applicable)*:

- ☒ Yes ☐ No General Provisions
- ☐ Yes ☒ No Utility Maintenance Provisions
- ☐ Yes ☒ No Storm Water Special Provisions
- ☒ Yes ☐ No Special Provisions
- ☐ Yes ☒ No A Cal-OSHA permit, if required: Permit No. _____
- ☐ Yes ☒ No As-Built Plans Submittal Route Slip for Locally Advertised Projects
- ☐ Yes ☒ No Storm Water Pollution Prevention Plan / Water Pollution Control Plan

In addition to fee, the permittee will be billed actual costs for:

- ☒ Yes ☐ No Review
- ☒ Yes ☐ No Inspection
- ☒ Yes ☐ No Field Work

(if any Caltrans effort expended)

☐ Yes ☒ No The information in the environmental documentation has been reviewed and considered prior to approval of this permit.

This permit is void unless the work is completed before October 28, 2022
This permit is to be strictly construed and no other work other than specifically mentioned is hereby authorized.
No project work shall be commenced until all the other necessary permits and the environmental clearances have been obtained.

PERMIT ENGINEER:Peter Caruso
COPIES TO:
Permittee
File No.: 21-0324
Juan Delira
Maintenance

APPROVED:

Ryan Chamberlain, District Director

BY:



CHARLES MAKSOUDIAN , P.E., District Permit Engineer

ADA Notice For individuals with sensory disabilities, this document is available in alternate formats. For alternate format information, contact the Forms Management Unit at (916) 445-1233, TTY 711, or write to Records and Forms Management, 1120 N Street, MS-89, Sacramento, CA 95814.

FM 91 1436 (D12 Permit App.)

City of La Habra
1222-SN-0324
Apr 22th, 2022

- **TRAFFIC CONTROL:** Work requiring traffic control shall be conducted between Monday through Friday 9:00AM and 3:00PM or as otherwise authorized by the Permit Engineer. Typical night work shall be performed between Sunday through Thursday 10:00PM to 5:00AM. All closure hours are subject to traffic analysis reports and/or traffic management plans as determined by the permit engineer. Lane closures are subject to restricted hours prior to and following legal holidays.

In addition to the attached General Provisions (TR-0045), the following Special Provisions are applicable:

- **Permittee shall STATUS (call) scheduled work DAILY via District's 24-hour Communication Center (DCC) at 949-936-3600 and text 10-97, 1098, or 10-22 status to the State permit inspector named on the permit (Inspector's cell phone number will be provided during the pre-job meeting). Status (call) using Closure ID No(s) and Log No(s) provided by the State inspector when work begins (first cone down, 10-97), and again when work is finished for the day (last cone removed, 10-98. If the work is cancelled on any scheduled day, Permittee shall call Caltrans DCC at 949-936-3600 and relay; "(Closure ID No., Log No) is 10-22" (cancelled). The cancellation call shall be made no later than the scheduled 10-97 time. Any delay in picking up your closure must be reported immediately to DCC at 949-936-3600 and State Permit Inspector. FAILURE TO FOLLOW THESE INSTRUCTIONS WILL RESULT IN SUSPENSION OF PERMIT.**

- If any of the closures on these plans cause a delay or backup onto the freeway, then the closure hours are to be reduced or moved to night work as determined by the Caltrans Permit Inspector.

The following advance notification procedure shall be followed for permitted work activities requiring Traffic Control within the State Right of Way:
By Noon Monday, permittee shall submit a completed copy of the attached **District 12 Closure Schedule Form** to the assigned Permit Inspector by email (as shown on the Closure Schedule Form) or by Fax (**657-328-6501**) for the following week period, defined as Saturday through the following Friday. If Monday is a designated holiday, the schedule shall be submitted on Tuesday. Incomplete, illegible or inaccurate information will be returned for correction and resubmittal. Permittee/Permittee's contractor will be notified of disapproved closures or closures that require coordination with other parties as a condition of approval. If email or fax is unavailable, the schedule may be called in by calling the assigned Permit Inspector, and the completed Form be submitted to the Permit Inspector during the pre-job meeting.

- ADA Compliance requirements shall be met at all times. (DIB 82-05) at https://dot.ca.gov/-/media/dot-media/programs/design/documents/dib82-06-a11y.pdf

- Permittee shall contact the LOCAL LAW ENFORCEMENT JURISDICTION at least 48 hours prior to implementing traffic control measures. All closures shall conform to State standards and shall follow Chapter 8 of the Safety Manual.

- Except for installing, maintaining and removing traffic control devices, any work encroaching within 3 feet of the edge of a travel lane for areas with a posted speed limit below 45mph, or 6 feet of the edge of a travel lane, for areas with a speed limit posted at 45mph or higher, shall require closing of that travel lane. Any work encroaching within 6 feet of the edge of the shoulder, shall require closing of that shoulder. Permittee shall notify the Department's Representative, and obtain approval of, all traffic control, lane closures or detours, at least seven (7) WORKING DAYS prior to setting up of any traffic control." Orange vests and hard hats shall be worn at all times while working within State right-of-way.

- By acceptance of this permit, the permittee understands and agrees to reimburse the State for all costs incurred for performing corrective work in the event that the permittee or permittee's representatives fail to install, replace, repair, restore, or remove facilities to state specifications for the immediate safe operation of the highway and satisfactory completion of all permit work. State forces may perform corrective work or it may be contracted out. Understood is that the above charges are in addition to permit fees, and an invoice will be sent to permittee for said charges after satisfactory completion of all work. The issuance of the permit shall not set as precedence for other permits approved in the future.

- It is the responsibility of the permittee, permittee's agents, or contractors to comply with all provisions of this permit and instructions from the State permit inspector. Permittee shall keep the permit package or copies thereof, at the work site at all times and show it upon request to any Department representative or law enforcement officer. When the permit package is not available, then immediate suspension of permit will occur.

- Permittee shall furnish the necessary inspection to provide for public safety and to ensure that all work within or affecting the State's right of way pursuant to this permit is in accordance with State Standards and requirements. The State permit inspectors will monitor the work authorized under this permit and the work is subject to the approval of the State permit inspectors.

- **Permittee shall remain solely responsible for compliance with all requirements of this permit.**

- Prior to performing any work pursuant to this permit, the permittee shall obtain all necessary permits and authorizations required of other governmental agencies and by law. The permittee shall make the necessary arrangements with the appropriate agencies to monitor and test performed work to ensure accordance with requirements of those agencies.

- American National Standards Institute (ANSI) compliant Class II vests and hard hats shall be worn while working within State's right-of-way. Workers working at night will be required to wear ANSI Class III warning garments. Class III compliance can be achieved by combining ANSI Class E pants worn with an ANSI Class II vest.

- The State permit inspector must ascertain and agree to all work details and all aspects of traffic control or no work shall begin on this permit.

- If a safe passage way cannot be provided, appropriate signs and barricades shall be installed at the limits and in advance of construction at the nearest Crosswalk or Intersection to detour pedestrians to facilities across the street.

- When the work area encroaches upon a sidewalk, walkway, or crosswalk area, special consideration must be given to pedestrian safety. Protective barricades, fencing, handrails and bridges, together with warning and guidance devices and signs must be utilized so that the passageway for pedestrians, especially blind and other physically handicapped is safe and well defined and shown on the approved permit plan.

- Personal vehicles of the Contractor's employees shall not be parked on paved shoulders or traveled way within the limits of this work.

- Unless otherwise approved by the State Permit Inspector no work that interferes with public traffic shall be performed on weekdays between 6:00 AM and 9:00 AM, and between 3:00 PM and 6:30 PM.

- The full width of traveled way shall be open for use by public traffic on Saturdays, and designated legal holidays, after 3:00 PM on Fridays and on the day preceding designated legal holidays, and when construction operations are not actively in progress.

- Except as specifically provided herein, all requirements of the Vehicle Code and other applicable laws must be complied with in all particulars.

- No lane may be closed or obstructed at any time unless specifically allowed per the encroachment permit, shown in approved traffic control plans, and/or as directed by the Department's Representative.

- The Permittee's work shall be subordinated to any operations which the Department may conduct and shall not delay, nor interfere with the Department's Forces or Department's Contractors.

- Should any deviation from these procedures or conditions be observed, all work shall be suspended until satisfactory steps have been taken to ensure compliance.

- In the event of any discrepancy between Permittee's Permit Plans and these Permit Special Provisions, these Special Provisions shall prevail.

Immediately following completion of the work permitted herein, Permittee shall fill out and fax the attached **Work Completion Notice** to **657-328-6501** to initiate final permit processing.

ENCROACHMENT PERMIT GENERAL PROVISIONS

TR – 0045 (REV. 04/2021)

1. **AUTHORITY:** The California Department of Transportation ("Department") has authority to issue encroachment permits under Division 1, Chapter 3, Article 1, Sections 660 through 734 of the Streets and Highways Code.
2. **REVOCATION:** Encroachment permits are revocable on five (5) business days' notice unless otherwise stated on the permit and except as provided by law for public corporations, franchise holders, and utilities. Notwithstanding the foregoing, in an emergency situation as determined by the Department, an encroachment permit may be revoked immediately. These General Provisions and any applicable Special Provisions are subject to modification or abrogation by the Department at any time. Permittees' joint use agreements, franchise rights, reserved rights or any other agreements for operating purposes in State of California ("State") highway right-of-way may be exceptions to this revocation.
3. **DENIAL FOR NONPAYMENT OF FEES:** Failure to pay encroachment permit fees when due may result in rejection of future applications and denial of encroachment permits.
4. **ASSIGNMENT:** This encroachment permit allows only the Permittee or Permittee's authorized agent to work within or encroach upon the State highway right-of-way, and the Permittee may not assign or transfer this encroachment permit. Any attempt to assign or transfer this encroachment permit shall be null and void.
5. **ACCEPTANCE OF PROVISIONS:** Permittee understands and agrees to accept and comply with these General Provisions, the Special Provisions, any and all terms and/or conditions contained in or incorporated into the encroachment permit, and all attachments to the encroachment permit (collectively "the Permit Conditions"), for any encroachment, work, and/or activity to be performed under this encroachment permit and/or under color of authority of this encroachment permit. Permittee understands and agrees the Permit Conditions are applicable to and enforceable against Permittee as long as the encroachment remains in, under, or over any part of the State highway right-of-way.
6. **BEGINNING OF WORK:** When traffic is not impacted (see General Provision Number 35), the Permittee must notify the Department's representative two (2) business days before starting permitted work. Permittee must notify the Department's representative if the work is to be interrupted for a period of five (5) business days or more, unless otherwise agreed upon. All work must be performed on weekdays during regular work hours, excluding holidays, unless otherwise specified in this encroachment permit.
7. **STANDARDS OF CONSTRUCTION:** All work performed within State highway right-of-way must conform to all applicable Departmental construction standards including but not limited to: Standard Specifications, Standard Plans, Project Development Procedures Manual, Highway Design Manual and Special Provisions.

   Other than as expressly provided by these General Provisions, the Special Provisions, the Standard Specifications, Standard Plans, and other applicable Departmental standards, nothing in these General Provisions is intended to give any third party any legal or equitable right, remedy, or claim with respect to the encroachment permit and/or to these General Provisions or any provision herein. These General Provisions are for the sole and exclusive benefit of the Permittee and the Department.

   Where reference is made in such standards to "Contractor" and "Engineer," these are amended to be read as "Permittee" and "Department's representative," respectively, for purposes of this encroachment permit.
8. **PLAN CHANGES:** Deviations from plans, specifications, and/or the Permit Conditions as defined in General Provision Number 5 are not allowed without prior approval from the Department's representative and the Federal Highway Administration ("FHWA") representative if applicable.
9. **RIGHT OF ENTRY, INSPECTION AND APPROVAL:** All work is subject to monitoring and inspection. The United States, the State, the Department, and the Directors, officers, employees, agents, and/or contractors of the State and/or of the Department, and other state, and federal agencies, and the FHWA, through their agents or representatives, must have full access to highway facilities/encroachment area, at any and all times for the purpose of inspection, maintenance, activities needed for construction/reconstruction, and operation of the State highway right-of-way.

   Upon completion of work, Permittee must request a final inspection for acceptance and approval by the Department. The local public agency Permittee must not give final construction approval to its contractor until final acceptance and approval by the Department is obtained.
10. **PERMIT AT WORKSITE:** Permittee must keep the permit package or a copy thereof at the work site at all times and must show it upon request to any Department representative or law enforcement officer. If the permit package, or a copy thereof, is not kept and made available at the work site at all times, the work must be suspended.
11. **CONFLICTING ENCROACHMENTS:** Permittee must yield start of work to ongoing, prior authorized work adjacent to or within the limits of the Permittee's project site. When existing encroachments conflict with Permittee's work, the Permittee must bear all cost for rearrangements (e.g., relocation, alteration, removal, etc.).

© 2018 California Department of Transportation. All rights reserved.

12. **PERMITS AND APPROVALS FROM OTHER PUBLIC AGENCIES AND/OR ENTITIES:** This encroachment permit is invalidated if the Permittee has not obtained all permits and approvals necessary and required by law, including but not limited to permits from the California Public Utilities Commission ("CPUC"), California Occupational Safety and Health Administration ("Cal-OSHA"), and any other public agency and/or entity having jurisdiction. Permittee warrants all such permits and approvals have been obtained before beginning work under this encroachment permit. The Department may, at the Department's discretion, require the Permittee to demonstrate that Permittee has obtained all such permits/approvals, and Permittee shall demonstrate this at the time and in the manner specified by the Department.
13. **PEDESTRIAN AND BICYCLIST SAFETY:** A safe continuous passageway must be maintained through the work area at existing pedestrian or bicycle facilities. At no time must pedestrians be diverted onto a portion of the street used for vehicular traffic. At locations where safe alternate passageways cannot be provided, appropriate signs and barricades must be installed at the limits of construction and in advance of the limits of construction at the nearest crosswalk or intersection to detour pedestrians to facilities across the street. Attention is directed to Section 7-1.04 "Public Safety," and to Section 12-4.04 "Temporary Pedestrian Access Routes," and to Section 16-2.02 "Temporary Pedestrian Facility," of the Department's Standard Specifications, and to California Vehicle Code section 21760, subdivision (c).
14. **PUBLIC TRAFFIC CONTROL:** The Permittee must provide traffic control protection, warning signs, lights, safety devices, etc., and take all other measures necessary for the traveling public's safety as required by law and/or the Department. While providing traffic control, the needs of all road users, including but not limited to motorists, bicyclists and pedestrians, including persons with disabilities in accordance with the Americans with Disabilities Act, must be an essential part of the work activity.

    Lane, Bike Lane, Sidewalk, Crosswalk, and/or shoulder closures must comply with the Department's Standard Specifications and Standard Plans for Temporary Traffic Control Systems & Temporary Pedestrian Access Routes, and with the applicable Special Provisions. Where issues are not addressed in the Standard Specifications, Standard Plans, and/or Special Provisions, the California Manual on Uniform Traffic Control Devices (Part 6, Temporary Traffic Control) must be followed.
15. **MINIMUM INTERFERENCE WITH TRAFFIC:** Permittee must plan and conduct work so as to create the least possible inconvenience to the traveling public (motorized vehicles, unmotorized vehicles such as bicycles, pedestrians, person(s) with disabilities, etc.), such that traffic is not unreasonably delayed.
16. **STORAGE OF EQUIPMENT AND MATERIALS:** The storage of equipment or materials is not allowed within State highway right-of-way, unless specified within the Special Provisions of this encroachment permit. If encroachment permit Special Provisions allow for the storage of equipment or materials within the State highway right-of-way, the equipment and material storage must also comply with Section 7-1.04, Public Safety, of the Department's Standard Specifications.
17. **CARE OF DRAINAGE:** Permittee must provide alternate drainage for any work interfering with an existing drainage facility in compliance with the Department's Standard Specifications, Standard Plans, and/or as directed by the Department's representative.
18. **RESTORATION AND REPAIRS IN STATE HIGHWAY RIGHT-OF-WAY:** Permittee is responsible for restoration and repair of State highway right-of-way resulting from permitted work (Streets and Highways Code, section 670 et seq.).
19. **STATE HIGHWAY RIGHT-OF-WAY CLEAN UP:** Upon completion of work, Permittee must remove and dispose of all scraps, refuse, brush, timber, materials, etc. off the State highway right-of-way. The aesthetics of the highway must be as it was before work started or better.
20. **COST OF WORK:** Unless stated otherwise in the encroachment permit or a separate written agreement with the Department, the Permittee must bear all costs incurred for work within the State highway right-of-way and waives all claims for indemnification or contribution from the United States, the State, the Department, and from the Directors, officers, and employees of the State and/or the Department. Removal of Permittee's personal property and improvements shall be at no cost to the United States, the State, and the Department.
21. **ACTUAL COST BILLING:** When specified in the permit, the Department will bill the Permittee actual costs at the currently set Standard Hourly Rate for encroachment permits.
22. **AS-BUILT PLANS:** When required, Permittee must submit one (1) set of folded as-built plans within thirty (30) calendar days after completion and acceptance of work in compliance with requirements listed as follows:
    a) Upon completion of the work provided herein, the Permittee must submit a paper set of As-Built plans to the Department's representative.
    b) All changes in the work will be shown on the plans, as issued with the permit, including changes approved by Encroachment Permit Rider.
    c) The plans are to be prominently stamped or otherwise noted "AS-BUILT" by the Permittee's representative who was responsible for overseeing the work. Any original plan that was approved with a Department stamp, or by signature of the Department's representative, must be used for producing the As-Built plans.
    d) If construction plans include signing or striping, the dates of signing or striping removal, relocation, or installation must be shown on the As-Built plans when required as a condition of the encroachment permit. When the construction plans show signing and striping for staged construction on separate sheets,

© 2018 California Department of Transportation. All rights reserved.

the sheet for each stage must show the removal, relocation, and installation dates of the appropriate staged striping and signing.

e) As-Built plans must contain the Encroachment Permit Number, County, Route, and Post Mile on each sheet.

f) The As-Built Plans must not include a disclaimer statement of any kind that differs from the obligations and protections provided by sections 6735 through 6735.6 of the California Business and Professions Code. Such statements constitute non-compliance with Encroachment Permit requirements and may result in the Department retaining Performance Bonds or deposits until proper plans are submitted. Failure to comply may also result in denial of future encroachment permits or a provision requiring a public agency to supply additional bonding.

23. **PERMITS FOR RECORD PURPOSES ONLY:** When work in the State highway right-of-way is within an area under a Joint Use Agreement (JUA) or a Consent to Common Use Agreement (CCUA), a fee exempt encroachment permit is issued to the Permittee for the purpose of providing a notice and record of work. The Permittee's prior rights must be preserved without the intention of creating new or different rights or obligations. "Notice and Record Purposes Only" must be stamped across the face of the encroachment permit.
24. **BONDING:** The Permittee must file bond(s), in advance, in the amount(s) set by the Department and using forms acceptable to the Department. The bonds must name the Department as obligee. Failure to maintain bond(s) in full force and effect will result in the Department stopping all work under this encroachment permit and possibly revoking other encroachment permit(s). Bonds are not required of public corporations or privately-owned utilities unless Permittee failed to comply with the provisions and/or conditions of a prior encroachment permit. The surety company is responsible for any latent defects as provided in California Code of Civil Procedure section 337.15. A local public agency Permittee also must comply with the following requirements:
    a) In recognition that project construction work done on State property will not be directly funded and paid by State, for the purpose of protecting stop notice claimants and the interests of State relative to successful project completion, the local public agency Permittee agrees to require the construction contractor to furnish both a payment and performance bond in the local public agency's name with both bonds complying with the requirements set forth in Section 3-1.05 Contract Bonds of the Department's Standard Specifications before performing any project construction work.
    b) The local public agency Permittee must defend, indemnify, and hold harmless the United States, the State and the Department, and the Directors, officers, and employees of the State and/or Department, from all project construction related claims by contractors, subcontractors, and suppliers, and from all stop notice and/or mechanic's lien claimants. The local public agency also agrees to remedy, in a timely manner and to the Department's satisfaction, any latent defects occurring as a result of the project construction work.
25. **FUTURE MOVING OF INSTALLATIONS:** Permittee understands and agrees to relocate a permitted installation upon notice by the Department. Unless under prior property right or agreement, the Permittee must comply with said notice at the Permittee's sole expense.
26. **ENVIRONMENTAL:**
    a) ARCHAEOLOGICAL/HISTORICAL: If any archaeological or historical resources are identified or encountered in the work vicinity, the Permittee must immediately stop work, notify the Department's representative, retain a qualified archaeologist who must evaluate the site at Permittee's sole expense, and make recommendations to the Department's representative regarding the continuance of work.
    b) HAZARDOUS MATERIALS: If any hazardous waste or materials (such as underground storage tanks, asbestos pipes, contaminated soil, etc.) are identified or encountered in the work vicinity, the Permittee must immediately stop work, notify the Department's representative, retain a qualified hazardous waste/material specialist who must evaluate the site at the Permittee's sole expense, and make recommendations to the Department's representative regarding the continuance of work.
    Attention is directed to potential aerially deposited lead (ADL) presence in unpaved areas along highways. It is the Permittee's responsibility to take all appropriate measures to protect workers in conformance with California Code of Regulations Title 8, Section 1532.1, "Lead," and with Cal-OSHA Construction Safety Orders, and to ensure roadway soil management is in compliance with Department of Toxic Substances Control (DTSC) requirements.
    c) Biological: If any regional, state, or federally listed biological resource is identified or encountered in the work vicinity, the Permittee must immediately stop work, notify the Department's representative, retain a qualified biologist who must evaluate the site at Permittee's sole expense, and make recommendations to the Department's representative regarding the continuance of work.
27. **PREVAILING WAGES:** Work performed by or under an encroachment permit may require Permittee's contractors and subcontractors to pay appropriate prevailing wages as set by the California Department of Industrial Relations. Inquiries or requests for interpretations relative to enforcement of prevailing wage requirements must be directed to the California Department of Industrial Relations.
28. **LIABILITY, DEFENSE, AND INDEMNITY:** The Permittee agrees to indemnify and save harmless the United States, the State, the Department, and the Directors, officers, employees, agents and/or contractors of the State and/or of the Department, including but not limited to the Director

© 2018 California Department of Transportation. All rights reserved.

of Transportation and the Deputy Directors, from any and all claims, demands, damages, costs, liability, suits, or actions of every name, kind, and description, including but not limited to those brought for or on account of property damage, invasion of privacy, violation or deprivation of a right under a state or federal law, environmental damage or penalty, or injury to or death of any person including but not limited to members of the public, the Permittee, persons employed by the Permittee, and/or persons acting on behalf of the Permittee, arising out of or in connection with: (a) the issuance and/or use of this encroachment permit; and/or (b) the encroachment, work, and/or activity conducted pursuant to this encroachment permit, or under color of authority of this encroachment permit but not in full compliance with the Permit Conditions as defined in General Provision Number 5 ("Unauthorized Work or Activity"); and/or (c) the installation, placement, design, existence, operation, and/or maintenance of the encroachment, work, and/or activity; and/or (d) the failure by the Permittee or anyone acting on behalf of the Permittee to perform the Permittee's obligations under any part of the Permit Conditions as defined in General Provision Number 5, in respect to maintenance or any other obligation; and/or (e) any change to the Department's property or adjacent property, including but not limited to the features or conditions of either of them, made by the Permittee or anyone acting on behalf of the Permittee; and/or (f) a defect or obstruction related to or caused by the encroachment, work, and/or activity whether conducted in compliance with the Permit Conditions as defined in General Provision Number 5 or constituting Unauthorized Work or Activity, or from any cause whatsoever. The duty of the Permittee to indemnify and save harmless includes the duties to defend as set forth in Section 2778 of the Civil Code.

It is the intent of the parties that except as prohibited by law, the Permittee will defend, indemnify, and hold harmless as set forth in this General Provision Number 28 regardless of the existence or degree of fault or negligence, whether active or passive, primary or secondary, on the part of: the United States, the State; the Department; the Directors, officers, employees, agents and/or contractors of the State and/or of the Department, including but not limited to the Director of Transportation and the Deputy Directors; the Permittee; persons employed by the Permittee; and/or persons acting on behalf of the Permittee.

The Permittee waives any and all rights to any type of expressed or implied indemnity from or against the United States, the State, the Department, and the Directors, officers, employees, agents, and/or contractors of the State and/or of the Department, including but not limited to the Director of Transportation and the Deputy Directors.

The Permittee understands and agrees to comply with the obligations of Titles II and III of the Americans with Disabilities Act in the conduct of the encroachment, work, and/or activity whether conducted pursuant to this encroachment permit or constituting Unauthorized Work or Activity, and further agrees to defend, indemnify, and save harmless the United States, the State, the Department, and the Directors, officers, employees, agents, and/or contractors of the State and/or of the Department, including but not limited to the Director of Transportation and the Deputy Directors, from any and all claims, demands, damages, costs, penalties, liability, suits, or actions of every name, kind, and description arising out of or by virtue of the Americans with Disabilities Act.

The Permittee understands and agrees the Directors, officers, employees, agents, and/or contractors of the State and/or of the Department, including but not limited to the Director of Transportation and the Deputy Directors, are not personally responsible for any liability arising from or by virtue of this encroachment permit.

For the purpose of this General Provision Number 28 and all paragraphs herein, "contractors of the State and/or of the Department" includes contractors, and their subcontractors, under contract to the State and/or the Department.

This General Provision Number 28 and all paragraphs herein take effect immediately upon issuance of this encroachment permit, and apply before, during, and after the encroachment, work, and/or activity contemplated under this encroachment permit, whether such work is in compliance with the Permit Conditions as defined in General Provision Number 5 or constitutes Unauthorized Work or Activity, except as otherwise provided by California law. The Permittee's obligations to defend, indemnify, and save harmless under this General Provision Number 28 take effect immediately upon issuance of this encroachment permit and have no expiration date, including but not limited to situations in which this encroachment permit expires or is revoked, the work or activity performed under this encroachment permit is accepted or not accepted by the Department, the encroachment, work, and/or activity is conducted in compliance with the Permit Conditions as defined in General Provision Number 5 or constitutes Unauthorized Work or Activity, and/or no work or activity is undertaken by the Permittee or by others on the Permittee's behalf.

If the United States or an agency, department, or board of the United States is the Permittee, the first two paragraphs of this General Provision Number 28 (beginning "The Permittee agrees to indemnify…" and "It is the intent of the parties…") are replaced by the following paragraph:

Claims for personal injury, death, or property damage allegedly caused by the negligent or wrongful act or omission of any employee of the United States acting within the scope of their official duties are subject to the Federal Tort Claims Act, as amended, 28 U.S.C. § 1346 and § 2671 et seq. (Chapter 171).

29. **NO PRECEDENT ESTABLISHED:** This encroachment permit is issued with the understanding that it does not establish a precedent.
30. **FEDERAL CIVIL RIGHTS REQUIREMENTS FOR PUBLIC ACCOMMODATION:**

© 2018 California Department of Transportation. All rights reserved.

a) As part of the consideration for being issued this encroachment permit, the Permittee, on behalf of Permittee and on behalf of Permittee's personal representatives, successors in interest, and assigns, does hereby covenant and agree that:
   i) No person on the grounds of race, color, or national origin may be excluded from participation in, be denied the benefits of, or be otherwise subjected to discrimination in the use of said facilities.
   ii) That in connection with the construction of any improvements on said lands and the furnishings of services thereon, no discrimination must be practiced in the selection and retention of first-tier subcontractors in the selection of second-tier subcontractors.
   iii) That such discrimination must not be practiced against the public in their access to and use of the facilities and services provided for public accommodations (such as eating, sleeping, rest, recreation), and operation on, over, or under the space of the State highway right-of-way.
   iv) That the Permittee must use the premises in compliance with all other requirements imposed pursuant to Title 15, Code of Federal Regulations, Commerce and Foreign Trade, Subtitle A. Office of the Secretary of Commerce, Part 8 (15 C.F.R. Part 8) and as said Regulations may be amended.

b) That in the event of breach of any of the above nondiscrimination covenants, the State and the Department have the right to terminate this encroachment permit and to re-enter and repossess said land and the facilities thereon and hold the same as if said permit had never been made or issued.

31. **MAINTENANCE:** The Permittee is responsible at Permittee's sole expense for the encroachment, and the inspection, maintenance, repair, and condition thereof, so that it does not negatively impact State highway safety, maintenance, operations, construction, activities needed for construction/reconstruction, State facilities, or other encroachments. Additional permits or approval documents may be required authorizing additional work related to inspection, repair, and/or maintenance activities.
32. **SPECIAL EVENTS:** In accordance with subdivision (a) of Streets and Highways Code section 682.5 and 682.7, the Department is not responsible for the conduct or operation of the permitted activity, and the applicant agrees to defend, indemnify, and hold harmless the United States, the State, the Department, and the Directors, officers, employees, agents, and contractors of the State and/or of the Department, including but not limited to the Director of Transportation and the Deputy Directors, from any and all claims, demands, damages, costs, liability, suits, or actions of every name, kind and description arising out of any activity for which this encroachment permit is issued.

    The Permittee is required, as a condition of this encroachment permit, for any event that awards prize compensation to competitors in gendered categories, for any participant level that receives prize compensation, to ensure the prize compensation for each gendered category is identical at each participant level. (Streets and Highways Code, section 682.7.)

    The Permittee understands and agrees to comply with the obligations of Titles II and III of the Americans with Disabilities Act in the conduct of the event, and further agrees to defend, indemnify, and save harmless the United State, the State and the Department, and the Directors, officers, and employees of the State and/or Department, including but not limited to the Director of the Department and the Deputy Directors, from any and all claims, demands, damages, costs, liability, suits, or actions of every name, kind and description arising out of or by virtue of the Americans with Disabilities Act.
33. **PRIVATE USE OF STATE HIGHWAY RIGHT-OF-WAY:** State highway right-of-way must not be used for private purposes without compensation to the State. The gifting of public property uses and therefore public funds is prohibited under the California Constitution, Article XVI, Section 6.
34. **FIELD WORK REIMBURSEMENT:** Permittee must reimburse the Department for field work performed on Permittee's behalf to correct or remedy hazards or damaged facilities, or to clear refuse, debris, etc. not attended to by the Permittee.
35. **LANE CLOSURE REQUEST SUBMITTALS AND NOTIFICATION OF CLOSURES TO THE DEPARTMENT:** Lane closure request submittals and notifications must be in accordance with Section 12-4.02, and Section 12.4-04, of the Department's Standard Specifications or as directed by the Department's representative. The Permittee must notify the Department's representative and the Traffic Management Center ("TMC") before initiating a lane closure or conducting an activity that may cause a traffic impact. In emergency situations when the corrective work or the emergency itself may affect traffic, the Department's representative and the TMC must be notified as soon as possible.
36. **SUSPENSION OF TRAFFIC CONTROL OPERATION:** The Permittee, upon notification by the Department's representative, must immediately suspend all traffic lane, bike lane, sidewalk, crosswalk, and/or shoulder closure operations and any operation that impedes the flow of traffic. All costs associated with this suspension must be borne by the Permittee.
37. **UNDERGROUND SERVICE ALERT (USA) NOTIFICATION:** Any excavation requires compliance with the provisions of Government Code section 4216 et seq., including but not limited to notice to a regional notification center, such as Underground Service Alert (USA). The Permittee must provide notification to the Department representative at least five (5) business days before, and the regional notification center at least forty-

© 2018 California Department of Transportation. All rights reserved.

eight (48) hours before, performing any excavation work within the State highway right-of-way.

38. **COMPLIANCE WITH THE AMERICANS WITH DISABILITIES ACT (ADA):** All work within the State highway right-of-way to construct and/or maintain any public facility must be designed, maintained, and constructed strictly in accordance with all applicable Federal Access laws and regulations (including but not limited to Section 504 of the Rehabilitation Act of 1973, codified at 29 U.S.C. § 794), California Access laws and regulations relating to ADA, along with its implementing regulations, Title 28 of the Code of Federal Regulations Parts 35 and 36 (28 C.F.R., Ch. I, Part 35, § 35.101 et seq., and Part 36, § 36.101 et seq.), Title 36 of the Code of Federal Regulations Part 1191 (36 C.F.R., Ch. XI, Part 1191, § 1119.1 et seq.), Title 49 of the Code of Federal Regulations Part 37 (49 C.F.R., Ch. A, Part 37, § 37.1 et seq.), the United States Department of Justice Title II and Title III for the ADA, and California Government Code section 4450 et seq., which require public facilities be made accessible to persons with disabilities.

    Notwithstanding the requirements of the previous paragraph, all construction, design, and maintenance of public facilities must also comply with the Department's Design Information Bulletin 82, "Pedestrian Accessibility Guidelines for Highway Projects" and Standard Plans & Specifications on "Temporary Pedestrian Access Routes."

39. **STORMWATER:** The Permittee is responsible for full compliance with the following:
    a) For all projects, the Department's Storm Water Program and the Department's National Pollutant Discharge Elimination System (NPDES) Permit requirements under Order No. 2012-0011-DWQ, NPDES No CAS000003; and
    b) In addition, for projects disturbing one acre or more of soil, with the California Construction General Permit Order No. 2009-0009-DWQ, NPDES No CAS000002; and
    c) In addition, for projects disturbing one acre or more of soil in the Lahontan Region with Order No. R6T-2016-0010, NPDES No CAG616002.
    d) For all projects, it is the Permittee's responsibility to install, inspect, repair, and maintain all facilities and devices used for water pollution control practices (Best Management Practices/BMPs) before performing daily work activities.

© 2018 California Department of Transportation. All rights reserved.

DISTRICT 12 LANE/SHOULDER CLOSURE REQUEST FORM
THIS FORM MUST BE SUBMITTED BY NOON ON MONDAY PRIOR TO THE WEEK OF THE PLANNED RESTRICTION

COMPLETE FORM AND EMAIL TO THE EMAIL ADDRESS INDICATED AT THE BOTTOM OF THE PAGE

PERMITTEE INFORMATION

Today's Date: _____ Time: _____ Contractor: _____

Requestor: _____ Field Contact: _____

Office Phone #: _____ Cell #: _____

Permit #: _____ Email Address: _____

Caltrans Inspector: _____ Emergency Phone Number: _____

CLOSURE INFORMATION

Week of: _____

Day(s): ☐ Saturday ☐ Sunday ☐ Monday ☐ Tuesday ☐ Wednesday ☐ Thursday ☐ Friday

Existing Number of Lanes in the Direction of Travel: ☐ 1 ☐ 2 ☐ 3 ☐ 4 ☐ 5 ☐ 6

Direction: ☐ NB ☐ SB ☐ EB ☐ WB _____

Lane #: ☐ 1 ☐ 2 ☐ 3 ☐ 4 ☐ 5 ☐ 6
(Lane #1 is the lane adjacent to the roadway centerline)

☐ Bike Lane ☐ Shoulder ☐ Median ☐ Auxiliary Lane

	COUNTY	ROUTE	PM	DESCRIPTIVE LOCATION/CLOSURE	TIME
FROM	☐ LA				
TO	☐ ORANGE				

Types of Closure, Closure Characteristics (Check all of the following that apply):

☐ Full Ramp Closure ☐ Full Street Closure ☐ 24-Hour/7-Day-Closure ☐ Detour Available

☐ Closure conforms to the 2014 California Manual of Uniform Traffic Control Devices (CA MUTCD) 2014, latest edition, copies of which are available at http://www.dot.ca.gov/trafficops/camutcd/

Estimated Delay: _____ Minutes Type of Work Proposed: _____

REAL TIME STATUS INSTRUCTIONS

Permittee shall call the Traffic Management Center (TMC) at 949-936-3600 and relay the Closure ID No(s), Log No(s), and status code provided by the State inspector when work begins (first cone down, status code 10-97), and again when work is finished for the day (last cone removed, status code 10-98. If the work is cancelled on any scheduled day, Permittee shall call TMC at 949-936-3600 and relay; "(Closure ID No., Log No.) is 10-22" (cancelled) no later than the scheduled 10-97 time. Any delay in picking up your closure must be reported immediately to TMC at 949-936-3600 and State Permit Inspector. Permittee shall text 10-97, 10-98, or 10-22 status to the State permit inspector named on the permit (Inspector's cell phone number will be provided during the pre-job meeting). FAILURE TO FOLLOW THESE INSTRUCTIONS WILL RESULT IN SUSPENSION OF PERMIT.

PERMITTEE SHALL SUBMIT THE SIGNED ORIGINAL COPY AT THE PRE-JOB MEETING AND EMAIL A COPY OF THE FORM TO Juan.Delira@DOT.CA.GOV and Armando.Hernandez@dot.ca.gov

Name: _____ Signature: _____ Date: _____

STATE OF CALIFORNIA • DEPARTMENT OF TRANSPORTATION

NOTICE OF COMPLETION
TR-0128 (REV 06/01) CT #7541-5529-1

PERMIT NO.

Dear Sir or Madam:

All work authorized by the above-numbered permit was completed on DATE

SIGNATURE OF PERMITTEE

FM 92 1546 M

ADA Notice For individuals with sensory disabilities, this document is available in alternate formats. For alternate format information, contact the Forms Management Unit at (916) 445-1233, TTY 711, or write to Records and Forms Management, 1120 N Street, MS-89, Sacramento, CA 95814.

STATE OF CALIFORNIA • DEPARTMENT OF TRANSPORTATION

NOTICE OF COMPLETION
TR-0128 (REV 06/01) CT #7541-5529-1

PERMIT NO.

Dear Sir or Madam:

All work authorized by the above-numbered permit was completed on DATE

SIGNATURE OF PERMITTEE

FM 92 1546 M

ADA Notice For individuals with sensory disabilities, this document is available in alternate formats. For alternate format information, contact the Forms Management Unit at (916) 445-1233, TTY 711, or write to Records and Forms Management, 1120 N Street, MS-89, Sacramento, CA 95814.

STATE OF CALIFORNIA • DEPARTMENT OF TRANSPORTATION

NOTICE OF COMPLETION
TR-0128 (REV 06/01) CT #7541-5529-1

PERMIT NO.

Dear Sir or Madam:

All work authorized by the above-numbered permit was completed on DATE

SIGNATURE OF PERMITTEE

FM 92 1546 M

ADA Notice For individuals with sensory disabilities, this document is available in alternate formats. For alternate format information, contact the Forms Management Unit at (916) 445-1233, TTY 711, or write to Records and Forms Management, 1120 N Street, MS-89, Sacramento, CA 95814.

STATE OF CALIFORNIA • DEPARTMENT OF TRANSPORTATION

NOTICE OF COMPLETION
TR-0128 (REV 06/01) CT #7541-5529-1

PERMIT NO.

Dear Sir or Madam:

All work authorized by the above-numbered permit was completed on DATE

SIGNATURE OF PERMITTEE

FM 92 1546 M

ADA Notice For individuals with sensory disabilities, this document is available in alternate formats. For alternate format information, contact the Forms Management Unit at (916) 445-1233, TTY 711, or write to Records and Forms Management, 1120 N Street, MS-89, Sacramento, CA 95814.

APPENDIX “D”

GEOTECHNICAL REPORT

GMU PAVEMENT ENGINEERING









Euclid Street from Whittier Boulevard to Northern City Limits
City of La Habra, California

Limited Pavement Evaluation Report

July 29, 2021

GMU Project No. 21-123-00
GMU Pavement Engineering
23241 Arroyo Vista
Rancho Santa Margarita, CA 92688

TABLE OF CONTENTS

Description Page

1. INTRODUCTION 2
   1.1 PURPOSE 2
   1.2 SCOPE 2
2. LOCATION AND PROJECT INFORMATION 2
3. FIELD EXPLORATION 3
   3.1 PAVEMENT CORINGS 3
4. LABORATORY TESTING 3
5. PAVEMENT ENGINEERING ANALYSIS 4
6. CONCLUSIONS AND RECOMMENDATIONS 4
   6.1 CONCLUSIONS 4
   6.2 PAVEMENT REPAIR RECOMMENDATIONS 4
      6.2.1 Conventional Remove-and-Replace Reconstruction 5
      6.2.2 Full-Depth Reclamation Reconstruction 6
      6.2.3 Unstable Subgrade 7
7. EXPECTATIONS 8
   7.1 DESIGN LIFE 8
8. LIMITATIONS 8
9. CLOSURE 9

Attachments:

Plate 1 – Location Map
Plate 2 – AC Core Hole Map
Plate 3 – Pavement Coring Summary Table

Appendix A – Select Photographs
Appendix B – Laboratory Data Summary

1. INTRODUCTION

1.1 PURPOSE

This report presents a summary of our limited pavement evaluation of Euclid Street between Whittier Boulevard and northern City limits. This street is located in the City of La Habra, California. A subsurface exploration was performed to evaluate the existing pavement structural section and to develop pavement design recommendations. Information such as coring data and laboratory testing results were evaluated and analyzed to develop pavement repair thickness recommendations.

1.2 SCOPE

The following scope of work was performed, as outlined in our scope and fee proposal dated May 24, 2021:

1. Coring locations were selected in areas of interest and delineated. Dig Alert was notified to identify potential conflicts with known underground utilities prior to drilling.
2. Asphalt concrete (AC) corings were performed at various locations throughout the project limits to measure and identify the various pavement layers, including AC thicknesses, aggregate base thicknesses (where present), and subgrade soil types.
3. Samples collected from the pavement corings were returned to our laboratory and the following tests were performed: R-value and moisture content testing.
4. Pavement engineering analysis was performed to develop pavement repair recommendations.
5. This report was prepared to summarize our work, findings, conclusions, and recommendations for the pavement design of Euclid Street.

2. LOCATION AND PROJECT INFORMATION

This project involved exploring the asphalt concrete (AC) pavement on Euclid Street between Whittier Boulevard and northern City limits in La Habra, California. This roadway segment is approximately 2,600 centerline-feet in length and consists of one travel-lane per direction. The edge of pavement is generally confined by existing concrete curbs and gutters, unconfined, or AC berms. The opposing directions of travel are separated by striping.

The general location of the street section is illustrated on **Plate 1 – Location Map**.

3. FIELD EXPLORATION

3.1 PAVEMENT CORINGS

A total of eight (8) pavement coring locations were explored on June 25, 2021. The coring locations were selected at distributed locations throughout the project limits.

The corings were performed using a 6-inch-diameter electric core drill. The thickness of the asphalt concrete (AC) and underlying aggregate base (AB) layers, where encountered, was recorded. The depth to subgrade and visual classification of the subgrade samples were also logged during the pavement corings. Bulk samples of the subgrade were collected and delivered to GMU's laboratory for further evaluation. The corings were backfilled with aggregate base (AB) and capped with asphalt concrete (AC) cold patch.

The following bullets summarize the findings from the pavement corings:

- The asphalt concrete (AC) layer thickness ranged from 2.5 to 6.0 inches thick and was approximately 4.5 inches thick on average.

- An aggregate base (AB) layer was encountered beneath all locations except coring location C-8. The minimum and maximum AB layer thicknesses encountered were 2.5 and 8.5 inches, respectively. The average AB thickness where AB was identified was approximately 5.4 inches. In general, the base layer was damp to moist and loose to medium dense based on level of difficulty encountered during excavation using hand tools.

- Subgrade soil types encountered throughout the section ranged between Clayey SAND and Silty SAND (SM) material. In general, the subgrade soil appears to be brown, damp to moist, and stiff to firm.

The results of the pavement corings are provided within **Plate 2 – AC Core Hole Map** and **Plate 3 – Pavement Coring Summary Table**.

4. LABORATORY TESTING

Limited laboratory tests were performed on select samples retrieved from the corings. The laboratory tests performed include:

- R-value; and
- In-place moisture content.

The results of the laboratory testing are summarized and presented in **Appendix B – Laboratory Data Summary**.

5. PAVEMENT ENGINEERING ANALYSIS

Engineering analyses was performed in accordance with the Caltrans Highway Design Manual. Topic 633 of the Caltrans Design Manual was followed to develop pavement thickness design recommendations. This design method considers the relationship between the subgrade R-value, gravel factor of the various pavement layers, and the traffic index (TI). The Project Civil Engineer provided 20-year TI's ranging between 7.0 and 8.0 for our pavement structural section analysis.

6. CONCLUSIONS AND RECOMMENDATIONS

6.1 CONCLUSIONS

Based on our work and findings described in Sections 1 through 5 of this report, it is our opinion that there are multiple influencing factors that has contributed to the roadway's current condition, summarized as follows:

- **Aging:** The asphalt concrete pavement within the project limits have developed significant aging-related distresses, including raveling/weathering and longitudinal, transverse, and block cracking. As the pavement ages, it oxidizes and becomes increasingly brittle, leading to development of longitudinal, transverse, and block cracks. As these cracks worsen over time, the integrity of the pavement degrades and moisture is allowed through the cracks. Excess moisture that saturates the underlying subgrade material will weaken its support, leading to development of more severe and eventually load-related distresses (i.e., alligator cracking, depressions, potholes etc.). Photographs showing the typical pavement surface condition throughout the site, as well as the longitudinal and transverse cracking, are provided within **Appendix A – Select Photographs**.

- **Structural inadequacy:** Significant alligator cracking was observed throughout the project limits. Alligator cracking is a distress type indicative of a pavement structural section that is inadequately thick for the loading or subgrade support conditions.

In addition to the visual indicators of structural inadequacy, based on structural thickness analysis and utilizing the average existing pavement layer thicknesses identified from the corings, the in-place pavement structural section between Whittier Boulevard and northern City limits is adequate for a TI of up to 5.0, which is significantly less than the 20-year design TI this street is anticipated to experience.

6.2 PAVEMENT REPAIR RECOMMENDATIONS

We have developed two (2) pavement section recommendations to offer options for the City. Our preferred pavement repair recommendation for this project is the full-depth reclamation reconstruction option, described in **Section 6.2.2**, as we anticipate it will cost approximately 20 to 40 percent less to construct.

A mill-and-overlay rehabilitation strategy was considered; however, it is ultimately not recommended due to the following factors:

- Core sampling indicated AC thicknesses as thin as 2.5 inches. Milling of relatively thin AC can cause disintegration the existing AC layer during construction, which would trigger the need for additional AC base repairs or an AC leveling course to address this condition.

- All coring locations revealed in-place pavement layer thicknesses that are substantially inadequate. In order to achieve structural adequacy, a relatively thick structural AC overlay would be required (>4.5-inches AC overlay), along with significant localized AC repairs (i.e., patches).

- Overall, the roadway is in poor to very poor condition. Significant patching repairs (>30 percent of the total surface area) to address localized areas of subgrade failure would be required to achieve a 20-year design life. A repair strategy that involves significant piecemealed patching repair, followed by installation of an overlay is unlikely to perform uniformly and achieve the requested design life. Also, the life cycle cost of this strategy will be greater (worse) than the other repair options provided.

Cold in-place recycling (CIR) was also considered; however, it is ultimately not recommended because structural adequacy cannot be practically achieved given this site's subgrade strength and traffic conditions. In lieu of CIR, a combination repair strategy consisting of full-depth reclamation with cement treatment of the subgrade and cold central plant recycled AC (CCPRAC), followed by an AC surface course, can be performed to achieve structural adequacy. Ultimately, this combination repair strategy is unlikely to be cost effective given this project's limited overall size, therefore, detailed recommendations to implement this type of combination repair strategy is unwarranted.

6.2.1 Conventional Remove-and-Replace Reconstruction

Conventional remove-and-replace reconstruction that will achieve a full 20-year design life involves removing existing AC, AB, and/or subgrade materials and installing a conventional full-depth AC or composite AC/AB section as shown in the following **Table 1**.

Table 1 – Conventional Remove-and-Replace Reconstruction

Location	Design Input Parameters	Full-Depth AC (minimum)	Composite AC/AB (minimum)
Euclid Street *Whittier Boulevard to northern City limits*	TI of **7.0** R-Value of 20 Min.	9.5-inches AC over Prepared subgrade	5.0-inches AC over 10.0-inches AB over Prepared subgrade
	TI of **8.0** R-Value of 20 Min.	11.0-inches AC over Prepared subgrade	6.0-inches AC over 11.5-inches AB over Prepared subgrade

Subgrade should be prepared in accordance with Standard Specifications for Public Works Construction (Greenbook) Section 301.1.

The recommended AB material is Greenbook crushed miscellaneous base (CMB) or Caltrans Class 2 aggregate base (AB). Existing AB materials may also be used for the new AB section, provided that it meets Greenbook CMB R-value and gradation requirements.

The recommended AC base course mix is any Greenbook ¾-inch AC mix (i.e., Greenbook Class B, Type IIIB2, or Type IIIB3) with PG 64-10 asphalt binder.

The recommended AC surface course mix is any Greenbook 1/2-inch AC mix (i.e., Greenbook Class C2, Type IIIC2, Type IIIC3) with PG 64-10 asphalt binder.

6.2.2 Full-Depth Reclamation Reconstruction

Full-depth reclamation (FDR) describes a process that involves re-using the in-place materials as part of the reconstructed pavement structural section. The in-place materials are pulverized using a "reclaimer" and cement is added to improve various properties of the material. The material is then referred to as Cement Stabilized Pulverized Base (CSPB) material per Greenbook Section 301-3.4.

Depending on the size of the repair area and other variables, FDR has shown to reduce construction costs by approximately 20 to 40 percent compared to conventional remove-and-replace reconstruction of the same structural capacity. Other benefits generally include shorter construction schedule and less impact to the environment as a result of reusing in-place materials and less import/export of new/existing materials.

The following **Table 2** presents the recommended full-depth reclamation reconstruction thicknesses.

Table 2 – Full-Depth Reclamation Reconstruction

Location	Design Input Parameters	Structural Section (minimum)
Euclid Street *Whittier Boulevard to northern City limits*	TI of **7.0** R-Value of 20 Min.	4.0-inches AC over 12.0-inches CSPB
	TI of **8.0** R-Value of 20 Min.	5.5-inches AC over 12.0-inches CSPB

Refer to Greenbook Section 301-3.4 for requirements to construct the CSPB section, noting the following additional considerations:

- **For this recommendation to be valid, additional laboratory testing and field exploration is required to gather sufficient sample size to further evaluate the in-situ materials for compatibility with cement treatment.**

- A mix design is recommended to be performed to evaluate the required amount of cement for the CSPB section to achieve a 7-day unconfined compressive strength of **300 psi**.

- The surface of the treated material should be wetted at least twice daily (possibly more depending on weather conditions) to promote hydration of the cement, per Greenbook Section 301-3.4.12.

- It is essential the CSPB layer be "micro-cracked" to minimize the potential for cement shrinkage, per Greenbook Section 301-3.4.13.

- As an alternative to micro-cracking, at least an additional 2 inches of granular material (such as sand or aggregate base) can be placed between the bottom of the asphalt concrete layer and the top of the cement-treated layer to minimize the potential for reflective cracking to develop.

We recommend that Greenbook Section 301-3.4 Cement Stabilized Pulverized Base be used as the specifications to implement this full-depth reclamation reconstruction alternative. In case of differences between the recommendations contained in this report and the Greenbook specifications, the recommendations contained within this report is recommended to supersede Greenbook requirements.

6.2.3 Unstable Subgrade

If unstable materials are exposed, the following recommendations can be implemented.

Unstable or subgrade conditions can be identified during construction by surface yielding under rubber-tired equipment loading (i.e., loaded water truck) and/or the inability to achieve proper compaction. The condition of the subgrade should be evaluated by GMU during the scarification and re-compaction efforts.

Drying back of localized wet soil conditions can be performed to address unstable soils if time allows. If drying back soil is not a practical option, additional remedial measures are recommended to stabilize the subgrade prior to placement of aggregate base and/or asphalt concrete. Depending on the extent of the in-stability, the recommended measures to stabilize the subgrade include:

- Install a "sacrificial AC bridging lift" which consist of an additional 4- to 8-inch thick AC layer to bridge over the unstable conditions. The thickness will vary depending on the severity of the unstable conditions.

- Removal of unstable soils to a depth of approximately 6 to 12 inches below the top of the unstable material and placement of aggregate base to replace the unstable soil. Shallow utilities at this depth of excavation may be encountered.

- If full-depth reclamation is performed, spread additional cement in the area with unstable subgrade and increase the depth of pulverization by an additional 6 inches.

The recommended thicknesses of remediation could be greater, or less, depending on the severity of the conditions that may be encountered. Any areas that require remediation should be observed by GMU to confirm the effectiveness of the recommendations provided herein.

The intent of these recommended remediation methods is to achieve a non-yielding subgrade when subjected to relatively heavy, rubber-tired construction equipment loading such as a loaded water truck or loader with full bucket. The remediated areas should be proof-rolled with this type of equipment after remediation to confirm that the subgrade is unyielding. Pavement constructed on top of an unstable section will likely not achieve the required compaction and/or will experience reduced pavement life.

7. EXPECTATIONS

7.1 DESIGN LIFE

Excluding the potential for reflective cracking to propagate sooner and assuming that construction is performed in accordance with our recommendations and specifications, we estimate that implementing the recommended pavement repair will meet the requested 20-year design life.

Please note, the pavement will develop distresses with time and should not be expected to remain distress free for the full duration of the design life period. Proper pavement maintenance, including localized AC repairs when needed, crack repairs, should be performed to achieve the intended design life. Areas that are structurally deficient and do not receive localized repairs may not achieve the intended design life.

8. LIMITATIONS

These recommendations are only intended to support the pavement repair map for the subject site. All parties reviewing or utilizing this report should recognize that the findings, conclusions, and recommendations presented represent the results of our professional engineering efforts and judgments. Due to the inexact nature of the state of the art of these professions and the possible occurrence of undetected variables in subsurface conditions, we cannot guarantee that the conditions actually encountered during construction will be the same as those observed and sampled during our study or that there are no unknown subsurface conditions which could have an adverse effect on the use of the roadway. We have exercised a degree of care comparable to the standard of practice presently maintained by other professionals in the fields of geotechnical engineering and pavement engineering and believe that our findings present a reasonably representative description of conditions and their probable influence on the grading and use of the streets. Surface cracks may develop sooner or later depending on a number of factors that are hard to predict or not provided to us, such as actual traffic volumes or the extent and severity of subsurface cracks that remain upon milling.

Because our conclusions and recommendations are based on a limited amount of geotechnical exploration and analysis, all parties should recognize the need for possible revisions to our

conclusions and recommendations during construction of the project. The recommendations provided in this report are based on the assumption that an adequate program of observations and testing will be conducted by our firm during the construction phases in order to evaluate compliance with our recommendations and to provide revised recommendations if necessary depending on conditions encountered.

GMU's recommendations for this project are, to a high degree, dependent upon appropriate quality control of subgrade preparation, mix design compliance, and pavement construction processes. Accordingly, the recommendations are made contingent upon the opportunity for GMU to observe the proposed construction. If parties other than GMU are engaged to provide such services, such parties must be notified that they will be required to assume complete responsibility as the engineer of record of the project by concurring with the recommendations in this letter and/or by providing alternative recommendations.

GMU performed its evaluation using the degree of care and skill ordinarily exercised under similar circumstances by reputable civil and/or geotechnical engineering professionals with experience in this area in similar soil conditions. No other warranty, either expressed or implied, is made as to the conclusions and recommendations contained in this report. This report has been prepared for the exclusive use of the City of La Habra in accordance with generally accepted pavement engineering practices.

9. CLOSURE

We appreciate this opportunity to provide our pavement design services on your project. If there are any questions concerning our findings or recommendations, please do not hesitate to contact us and we will be happy to discuss them with you.

Respectfully submitted,

GMU PAVEMENT ENGINEERING

Ali Zalghout, M.Sc.
Senior Pavement Staff Engineer



Roger W. Schlierkamp, M.Sc., PE 81529
Director of Pavement Engineering

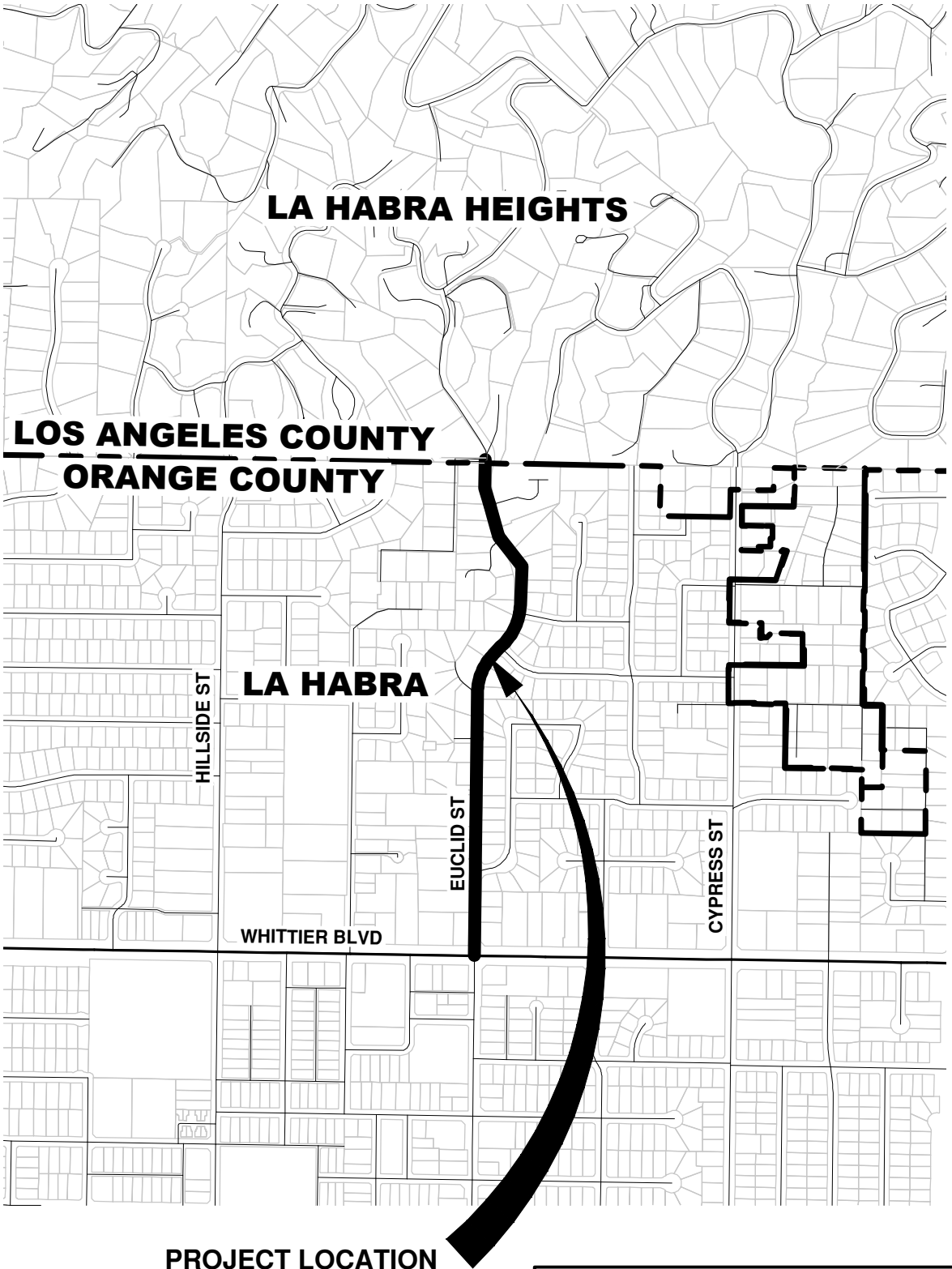

Location Map

GMU	Date: JULY 29, 2021	Plate 1
	Project No.: 21-123-00	

DRAWING: q:\2021\21-123-00\dwg\2112300_plate 1_location map.dwg PLOTTED: 7/15/2021 9:48 AM BY: Jesus Meza

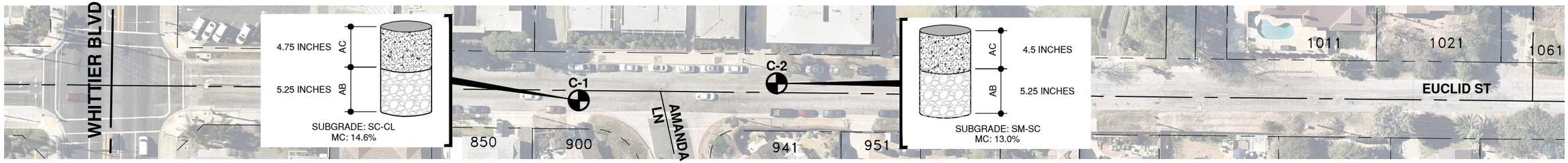

1 AC CORE HOLE MAP - SOUTHERNMOST AREA

Scale: 1" = 80'

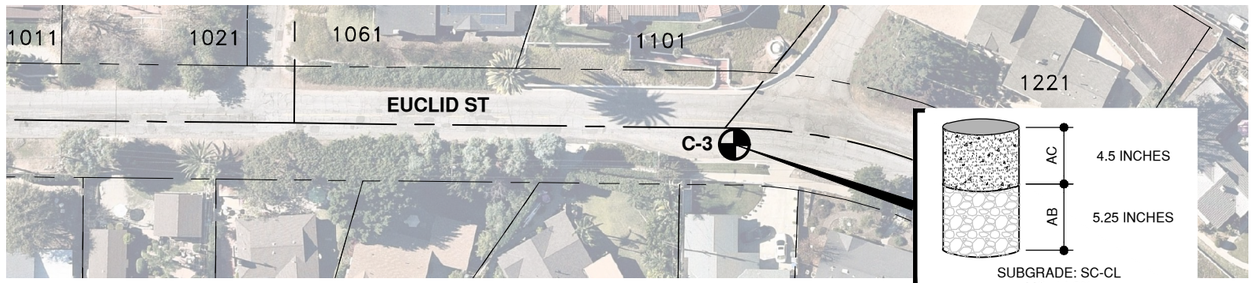

2 AC CORE HOLE MAP - CENTRAL AREA

Scale: 1" = 80'

LEGEND

C-8 APPROXIMATE LOCATION OF AC CORE HOLE

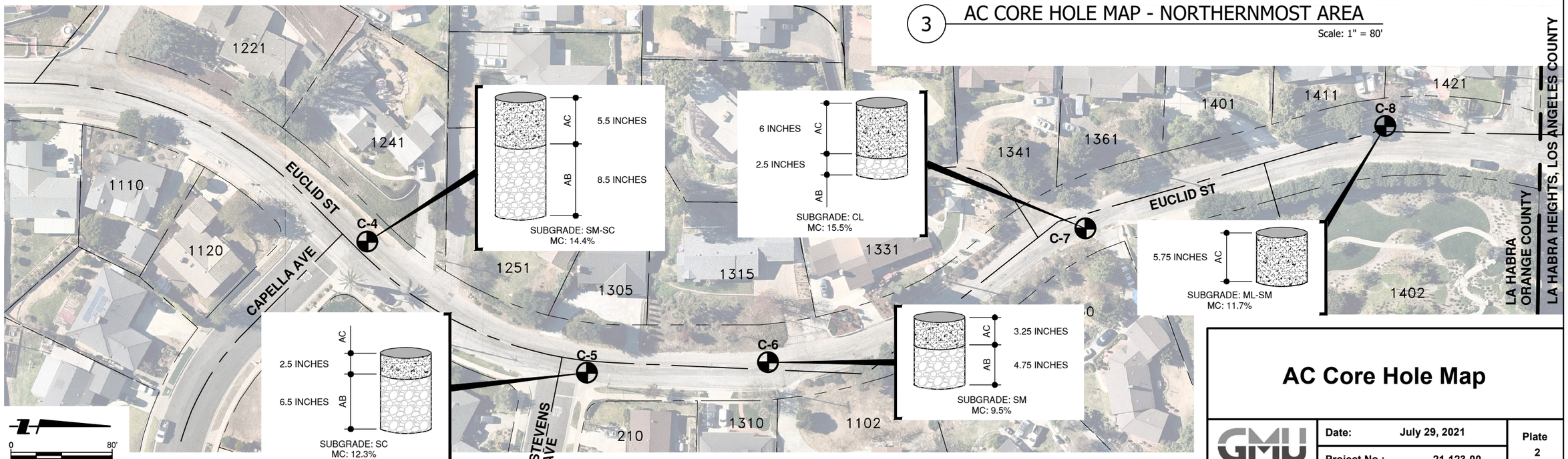

3 AC CORE HOLE MAP - NORTHERNMOST AREA

Scale: 1" = 80'

AC Core Hole Map

GMU	Date: July 29, 2021	Plate 2
	Project No.: 21-123-00	

DRAWING: g:\2021\21-123-00\dwg\2112300_plate 2_ac core hole map.dwg PLOTTED: 7/14/2021 4:40 PM BY: Jesus Mezo

Plate 3 - Pavement Coring Summary Table

City of La Habra - Euclid Street Pavement Project
Project No. 21-123-00

Coring performed on June 25, 2021

Location ID	C-1	C-2	C-3	C-4
Approximate Location	911 N Euclid Street, northbound direction	951 N Euclid Street, southbound direction	1100 N Euclid Street, northbound direction	1241 N Euclid Street, southbound direction
Asphalt Concrete (AC) Thickness & Description	**4.75-inches thick AC,** 1/2-inch wide crack extends throughout entire sample	**4.5-inches thick AC,** 1-inch wide crack extends throughout entire sample	**4.5-inches thick AC,** 1/2-inch wide crack extends throughout entire sample	**5.5-inches thick AC,** 1/2-inch wide crack extends throughout entire sample, existing surface lift is 2.75 inches
Aggregate Base (AB) Thickness & Description	**5.25-inches thick AB,** Moist, sub-angular to rounded aggregates, medium dense based on difficulty of excavation	**5.25-inches thick AB,** Damp, sub-angular to angular aggregates, loose based on difficulty of excavation	**5.25-inches thick AB,** Damp to moist, angular aggregates, loose based on difficulty of excavation	**8.5-inches thick AB,** Moist, angular aggregates, loose to medium dense based on difficulty of excavation
Subgrade Soil Description	**10 to 48 inches depth,** CLAYEY SAND to SANDY CLAY (SC/CL); yellowish brown, damp, fine grained sand, stiff to firm	**9.75 to 48 inches depth,** SILTY SAND to CLAYEY SAND (SM/SC); yellowish brown, damp to moist, fine grained sand, stiff to firm	**9.75 to 48 inches depth,** CLAYEY SAND to SANDY CLAY (SC/CL); dark brown, moist, fine grained sand, stiff to firm	**14 to 51 inches depth,** SILTY SAND to CLAYEY SAND (SM/SC); with chunks of clay, light brown, moist to very moist, fine grained sand, soft
Maximum Depth of Excavation **Depth to Groundwater (if encountered)**	48 inches Groundwater not encountered	48 inches Groundwater not encountered	48 inches Groundwater not encountered	51 inches Groundwater not encountered

Location ID	C-5	C-6	C-7	C-8
Approximate Location	1305 N Euclid Street, northbound direction	1315 N Euclid Street, southbound direction	1341 N Euclid Street, northbound direction	1421 N Euclid Street, southbound direction
Asphalt Concrete (AC) Thickness & Description	**2.5-inches thick AC,** 1/2-inch wide crack extends throughout entire sample	**3.25-inches thick AC,** 1/2-inch wide crack extends throughout entire sample	**6-inches thick AC,** 1/2-inch wide crack extends throughout entire sample	**5.75-inches thick AC,** 1/2-inch wide crack extends throughout entire sample
Aggregate Base (AB) Thickness & Description	**6.5-inches thick AB,** Moist, angular aggregates, medium dense based on difficulty of excavation	**4.75-inches thick AB,** Moist to damp, angular aggregates, loose based on difficulty of excavation	**2.5-inches thick AB,** Moist, angular aggregates, loose based on difficulty of excavation	**Not encountered**
Subgrade Soil Description	**9 to 48 inches depth,** CLAYEY SAND (SC); light yellowish brown, moist to very moist, fine grained sand, firm	**8 to 48 inches depth,** SILTY SAND (SM); light brown, damp to moist, medium to coarse grained sand, loose	**8.5 to 45 inches depth,** SILTY SANDY CLAY (CL); dark brown, moist to very moist, fine grained sand, firm	**5.75 to 48 inches depth,** SANDY SILT to SILTY SAND (ML/SM); with few chunks of clay, light yellowish brown, damp to moist, fine grained sand, soft to firm
Maximum Depth of Excavation **Depth to Groundwater (if encountered)**	48 inches Groundwater not encountered	48 inches Groundwater not encountered	45 inches Groundwater not encountered	48 inches Groundwater not encountered

Appendix A
Select Photographs

GMU
PAVEMENT
ENGINEERING



Photo 1: Core location C-1. Core located within area containing medium-severity alligator cracking, medium-severity depression, and medium-severity weathering.



Photo 2: Coring sample C-1 reveals an AC layer thickness of 4.75 inches.



Photo 3: Coring location C-5. Surface contains medium-severity block cracking, medium-severity alligator cracking, and medium-severity weathering.



Photo 4: Coring sample C-5 reveals an AC layer thickness of 2.5 inches.



Photo 5: Coring location C-7. Surface contains medium-severity alligator cracking and medium-severity weathering.



Photo 6: Coring sample C-7 reveals an AC layer thickness of 6.0 inches.

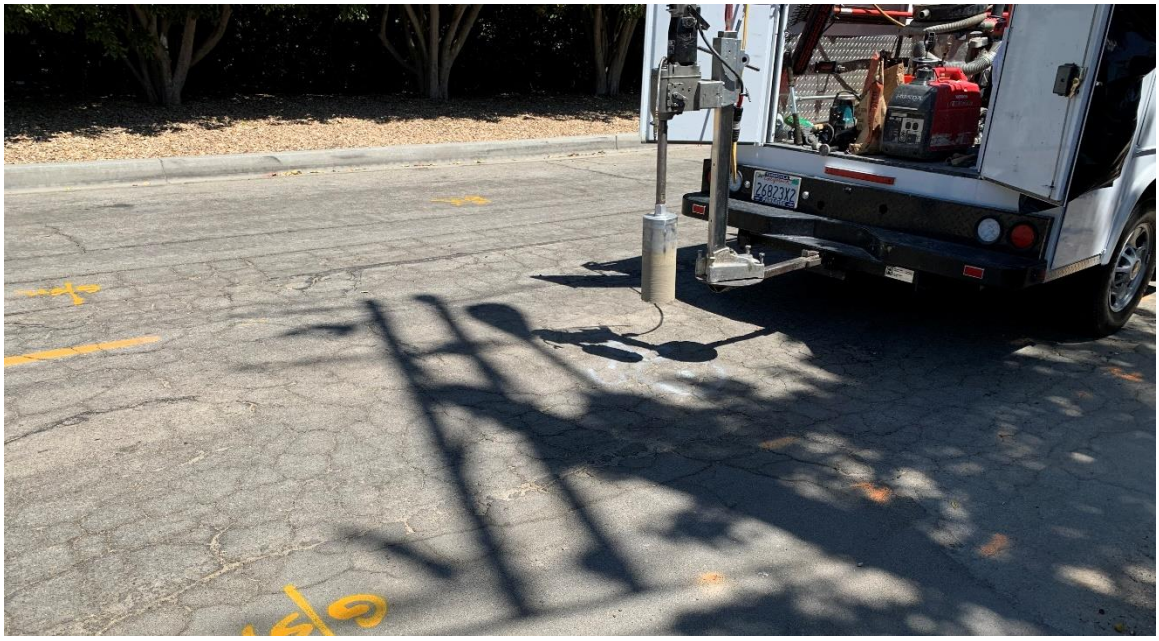

Photo 7: Coring location C-8. Surface contains medium-severity longitudinal and transverse cracking, medium- to high-severity alligator cracking, and medium-severity weathering.



Photo 8: Coring sample C-8 reveals an AC layer thickness of 5.75 inches.

Appendix B
Laboratory Data Summary

GMU
PAVEMENT
ENGINEERING

TABLE B-1
SUMMARY OF SOIL LABORATORY DATA

Sample Information			Geologic Unit	USCS Group Symbol	In Situ Water Content, %	In Situ Dry Unit Weight, pcf	In Situ Satur-ation, %	Sieve/Hydrometer				Atterberg Limits			Compaction		Expansion Index	R-Value	Chemical Test Results			
Boring Number	Depth, feet	Elevation, feet						Gravel, %	Sand, %	<#200, %	<2µ, %	LL	PL	PI	Maximum Dry Unit Weight, pcf	Optimum Water Content, %			pH	Sulfate (ppm)	Chloride (ppm)	Min. Resistivity (ohm/cm)
C-1	0.83	NA		SC-CL	14.6													20				
C-2	0.83	NA		SM-SC	13.0																	
C-3	0.83	NA		SC-CL	14.2																	
C-4	1.16	NA		SM-SC	14.4																	
C-5	0.75	NA		SC	12.3																	
C-6	0.67	NA		SM	9.5													74				
C-7	0.71	NA		CL	15.5																	
C-8	0.48	NA		ML-SM	11.7																	

GMU_TABLE_SOIL_LAB_DATA 21-123-00.GPJ FNC AB GWGN01.GDT 7/9/21

Project: City of La Habra - Euclid Street Rehabilitation
Project No. 21-123-00

R-VALUE TEST REPORT

☑ CT-301 ☐ ASTM-D2844

PROJECT NAME:	City of La Habra - Euclid Street Rehabilitation	PROJECT NUMBER:	21-123-00
SAMPLE LOCATION:	C-1 Subgrade	SAMPLE NUMBER:	C-1
SAMPLE DESCRIPTION:	CLAYEY SAND (SC-CL), brown	SAMPLE DEPTH:	10"-48"
SAMPLED BY:	RA 6/25/21	TESTED BY:	ER
		DATE TESTED:	7/8/2021

TEST SPECIMEN	A	B	C
MOISTURE AT COMPACTION %	16.4	15.2	14.1
WEIGHT OF SAMPLE, grams	1097	1070	1004
HEIGHT OF SAMPLE, Inches	2.55	2.45	2.29
DRY DENSITY, pcf	112.1	114.9	116.5
COMPACTOR AIR PRESSURE, psi	130	200	300
EXUDATION PRESSURE, psi	252	463	758
EXPANSION, Inches x 10exp-4	12	22	30
STABILITY Ph 2,000 lbs (160 psi)	105	96	80
TURNS DISPLACEMENT	5.89	5.03	4.25
R-VALUE UNCORRECTED	18	25	37
R-VALUE CORRECTED	18	25	33
EXPANSION PRESSURE (psf)	51.8	95.0	129.6

R-VALUE VS. EXUDATION PRESSURE

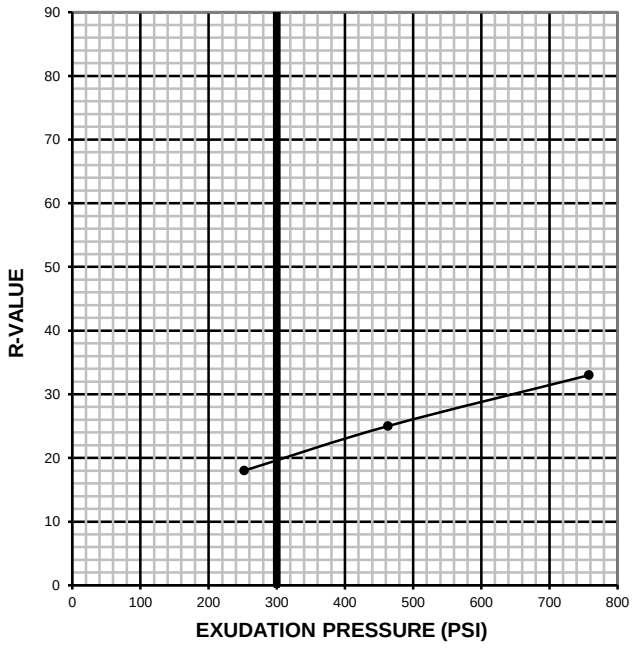

EXPANSION PRESSURE VS. EXUDATION PRESSURE

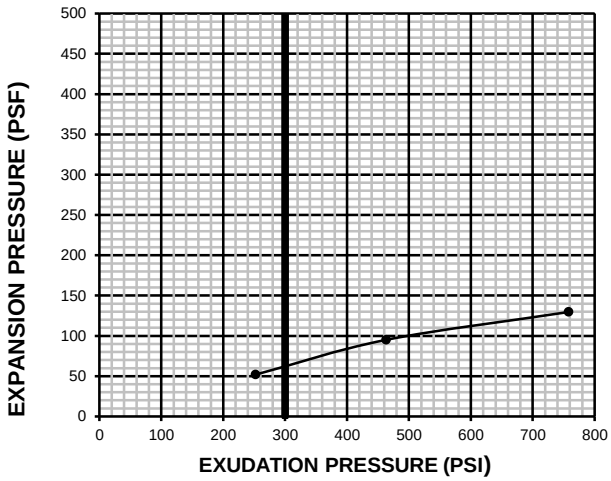

R-VALUE AT EQUILIBRIUM:	20

R-VALUE BY EXUDATION PRESSURE:	20
R-VALUE BY EXPANSION PRESSURE:	N.A
EXPANSION PRESSURE AT 300 PSI EXUDATION:	65
TRAFFIC INDEX (Assumed):	5.5
GRAVEL FACTOR (Assumed):	1.5
UNIT MASS OF COVER MATERIAL, kg/m^3 (Assumed):	2100.0

COVER THICKNESS (STABILOMETER BY EXPANSION PRESSURE)

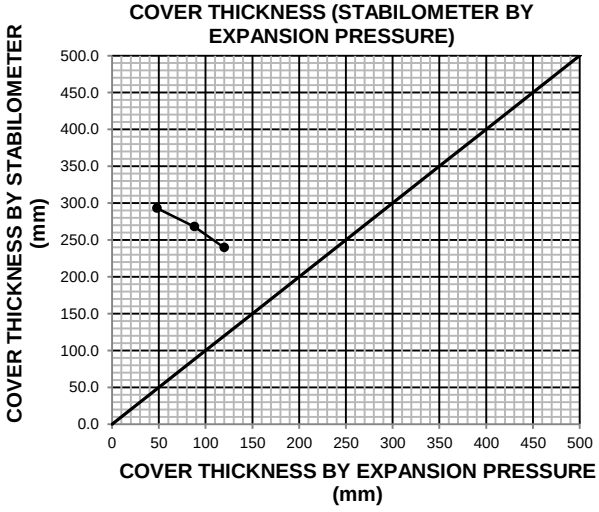

R-VALUE TEST REPORT

☑ CT-301 ☐ ASTM-D2844

PROJECT NAME:	City of La Habra - Euclid Street Rehabilitation	PROJECT NUMBER:	21-123-00
SAMPLE LOCATION:	C-6 Subgrade	SAMPLE NUMBER:	C-6
SAMPLE DESCRIPTION:	SILTY SAND (SM), brown	SAMPLE DEPTH:	8"-48"
SAMPLED BY:	RA 6/25/21	TESTED BY:	ER
		DATE TESTED:	7/8/2021

TEST SPECIMEN	A	B	C
MOISTURE AT COMPACTION %	13.5	12.4	11.8
WEIGHT OF SAMPLE, grams	1101	1069	1034
HEIGHT OF SAMPLE, Inches	2.56	2.48	2.40
DRY DENSITY, pcf	114.9	116.3	116.8
COMPACTOR AIR PRESSURE, psi	270	270	350
EXUDATION PRESSURE, psi	159	308	617
EXPANSION, Inches x 10exp-4	0	6	9
STABILITY Ph 2,000 lbs (160 psi)	30	22	18
TURNS DISPLACEMENT	5.82	5.65	5.09
R-VALUE UNCORRECTED	65	74	79
R-VALUE CORRECTED	65	74	78
EXPANSION PRESSURE (psf)	0.0	25.9	38.9

R-VALUE VS. EXUDATION PRESSURE

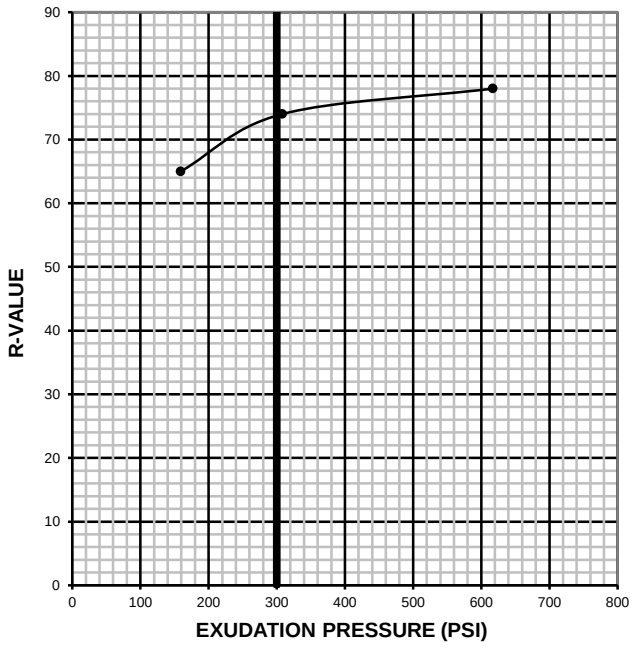

EXPANSION PRESSURE VS. EXUDATION PRESSURE

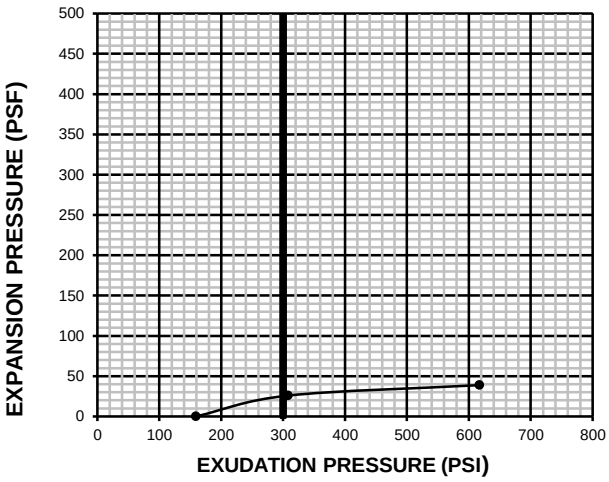

R-VALUE AT EQUILIBRIUM:	74

R-VALUE BY EXUDATION PRESSURE:	74
R-VALUE BY EXPANSION PRESSURE:	N.A
EXPANSION PRESSURE AT 300 PSI EXUDATION:	25
TRAFFIC INDEX (Assumed):	5.5
GRAVEL FACTOR (Assumed):	1.5
UNIT MASS OF COVER MATERIAL, kg/m^3 (Assumed):	2100.0

COVER THICKNESS (STABILOMETER BY EXPANSION PRESSURE)

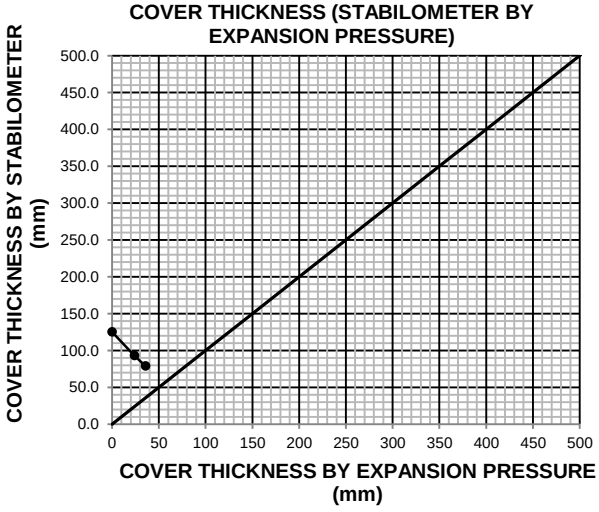

APPENDIX “E”

CONSTRUCTION MATERIAL RECYCLING

CONSTRUCTION/DEMOLITION RECYCLING PLAN

According to a Calrecycle Solid Waste Characterization Study completed in 2014, construction and demolition (C&D) materials are estimated to account for between 21.7 to 25.5 percent of the disposed waste stream. Previous study estimates have ranged from 29 percent in 2008 to 24 percent in 2004.

In 2011, the State Legislature passed the California Green Building Standards Code (CALGreen), which required recycling diversion of construction waste during most construction projects. Effective January 1, 2017, in all jurisdictions including those without a C&D ordinance requiring the diversion of 65 percent of construction waste, the owners/builder of construction projects within the covered occupancies will be required to divert 65 percent of the construction waste materials generated during the project. The code also allows a disposal reduction option that can be met when the project's disposal rate is less than 2 lbs. per square foot for non-residential and high rise residential or less than 3.4 lbs. per square foot for low-rise residential.

In pursuant to this Act, The City of La Habra required that in issuing construction/demolition permits, each applicant must prepare a plan for how inert solid wastes that are generated during a project will segregate recycled. This plan should include the expected type of material generated and the location where material is to be disposed and /or recycled. The developer is also required to provide documentation at the completion of the project of the quantity and types of waste disposed and diverted, and the destination of those diverted materials including materials reused on site using the Construction/Demolition Recycling Report.

If the project does not generate sufficient materials to warrant the recycling process of material, a report must still be submitted stating so. Types and quantities generated shall be listed as well as where such materials are hauled and by whom.

Construction/Demolition Recycling Reports shall be signed by both the property owner and the contractor after completion of the project and prior to issuance of certificate of occupancy.

If you have any questions, please contact the Public Works Department Recycling Coordinator at (562) 383-4170.

CONSTRUCTION/DEMOLITION RECYCLING REPORT - PART 1 OF 2
(To be completed **before** project completion)

Owner Name:_____ Owner Address:_____

Contact Person Name:_____ Phone Number:_____

Property Address:_____

Description of Project: _____

_____

Anticipated materials removed from property:_____

_____

Location where waste materials will be hauled:_____

Location where recyclable materials will be recycled:_____

Material	Total Amount Recycled (lbs.)	Total Waste Generated (lbs.)
Concrete		
Asphalt		
Wood		
Dirt		
Other: _____		
Other: _____		
TOTAL	**TOTAL:**	**TOTAL:**

We the undersigned swear that the information herewith submitted is in all respects true and correct to the best of our knowledge.

Contractor_____ _____
Signed Date

Property Owner _____ _____
Signed Date

For a list of local recyclers, please find attached list of recycling facilities or contact the Public Works Department Recycling Coordinator at (562) 383-4170

For Office Use Only

Plan Approved Yes No Date _____

Signed _____

CONSTRUCTION/DEMOLITION RECYCLING REPORT - PART 2 OF 2
(To be completed **after** project completion)

Owner Name:_____ Owner Address:_____

Contact Person Name:_____ Phone Number:_____

Property Address:_____

Description of Project: _____

_____

_____

Anticipated materials removed from property:_____

_____

Location where materials will be hauled:_____

Location where materials will be recycled:_____

Material	Total Amount Recycled (lbs.)	Total Waste Generated (lbs.)
Concrete		
Asphalt		
Wood		
Dirt		
Other: _____		
Other: _____		
TOTAL	**TOTAL:**	**TOTAL:**

We the undersigned swear that the information herewith submitted is in all respects true and correct to the best of our knowledge.

Contractor_____ _____
Signed Date

Property Owner _____ _____
Signed Date

Please re-submit completed form to Public Works, either by email at jhenderson@lahabraca.gov or mail to:

City of La Habra Public Works Department
621 W. Lambert Rd.
La Habra, CA 90631