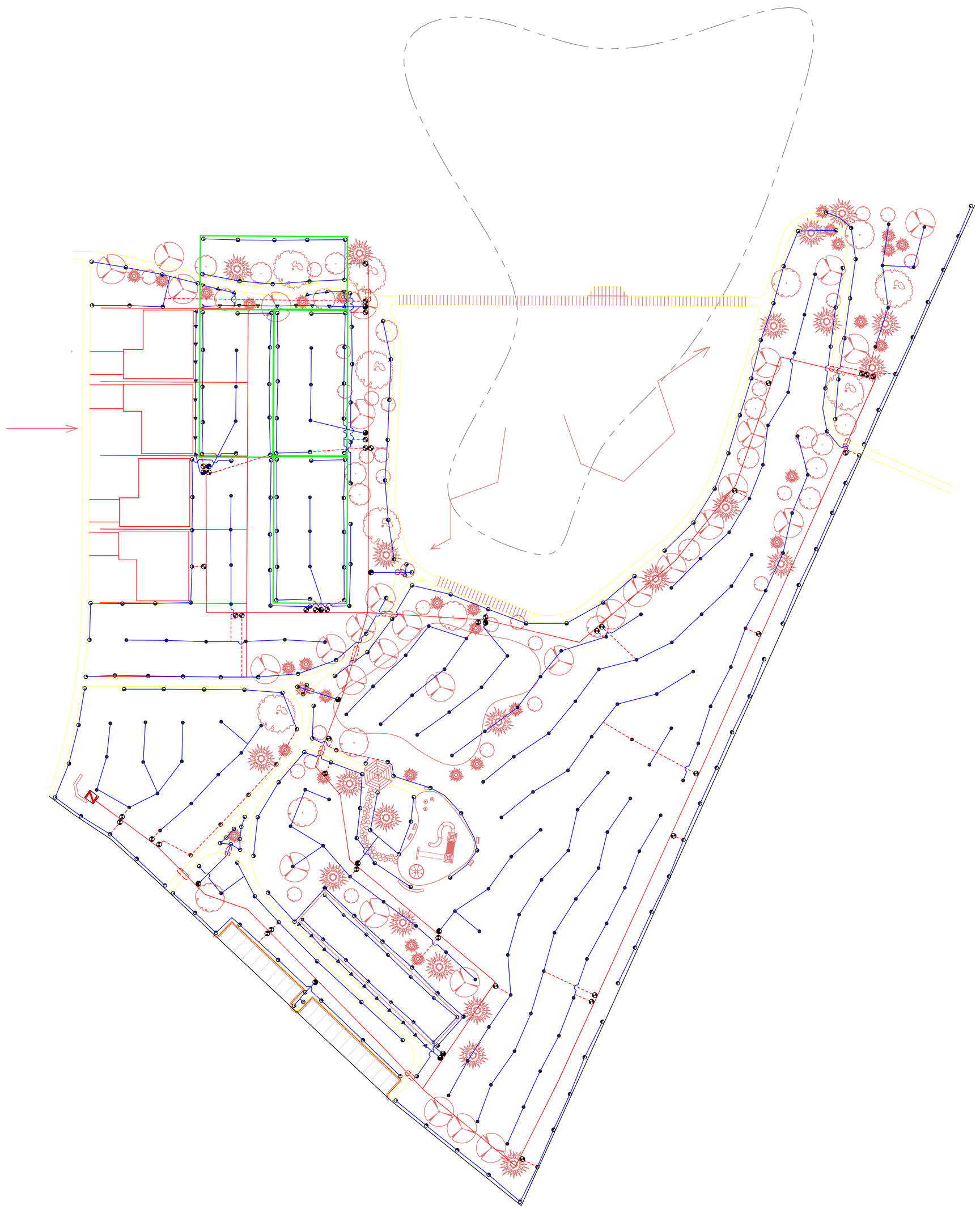

Irrigation Pipe Table

Length	Symbol	Pipe
11,400'		1" 80 PSI POLYETHYLENE PIPE, LATERALS
1,200'		1-1/4" 80 PSI POLYETHYLENE PIPE, LATERALS
2,720'		2" 160 PSI SDR 26 PVC PIPE, MAIN LINE
100'		4" 160 PSI SDR 26 PVC PIPE, SLEEVES

Irrigation Equipment Table

Quantity	Symbol	Equipment
41		HUNTER PGV-151G 1-1/2" ZONE VALVE
14		HUNTER PGV-100MB 1" ZONE VALVE
15	-NOT SHOWN-	HUNTER ICD-100 SINGLE STATION DECODER
8	-NOT SHOWN-	HUNTER ICD-200 TOW STATION DECODER
6	-NOT SHOWN-	HUNTER ICD-400 FOUR STATION DECODER
1		WILKENS 1-1/2" 975XL BACKFLOW PREVENTOR W/ ENCLOSURE
1	-NOT SHOWN-	HUNTER ACC-99D CONTROLLER (TO BE LOCATED BY CONTRACTOR)

Irrigation Heads Table

Quantity	Symbol	Sprinkler Heads
145		HUNTER I-20 36V
230		HUNTER I-20 ADS
15		HUNTER MPR40-04-CV-MP2000
35		HUNTER MPR40-04-CV-MP1000, EST, SST
20		HUNTER MPR40-04-CV-MP1000

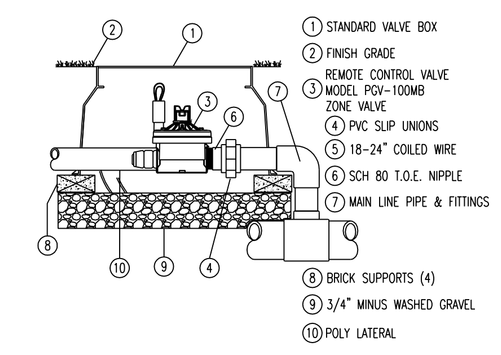

PGV-100MB ZONE VALVE

SCALE:N.T.S. Hunter IRRIGATION DETAIL

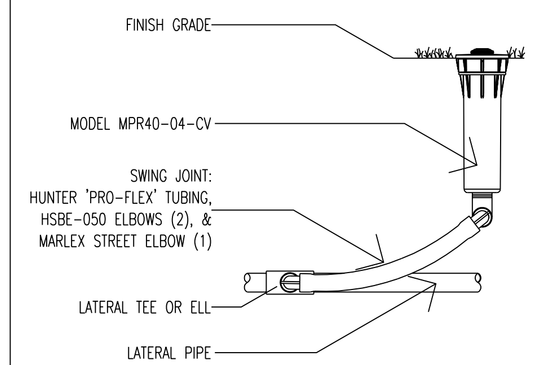

MPR40-04-CV

MP ROTATOR SPRINKLER

SCALE:N.T.S. Hunter IRRIGATION DETAIL

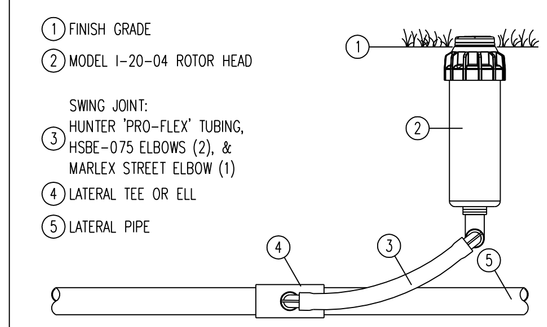

I-20 ROTOR HEAD

SCALE: N.T.S. Hunter IRRIGATION DETAIL

General Notes

IRRIGATION DRAWINGS ARE DIAGRAMMATIC. ALL IRRIGATION EQUIPMENT PLACED IN THE FIELD WILL BE APPROVED BY THE OWNER OR ITS REPRESENTITIVE.

CONTRACTOR RESPONSIBLE FOR VERIFICATION OF EQUIPMENT QUANITY.

DUE TO THE SCALE, ACCURACY OR CONDITION OF SITE PLANS, CONTRACTOR WILL MODIFY PATTERN TO GUARANTEE 100% COVERAGE OF INDICATED AREAS IN CASES WHERE SITE DIMENSIONS CONFLICT WITH DRAWING.

ALL LATERAL PIPE WILL BE 1" UNLESS MARKED.

ALL MAINLINE WILL BE 2" UNLESS MARKED.

ALL SIDEWALK CROSSINGS TO BE SLEEVED.

BACKFLOW AS PER LOCAL CODES.

FLOW RATE IS 30 GPM @ 70 PSI.

No.	Revision/Issue	Date

CENTRAL IRRIGATION

DESIGN SERVICES
PHONE: (914) 347-5656
E-MAIL: DESIGN@CENTRALIRRIGATIONSUPPLY.COM

CENTRAL IRRIGATION SUPPLY

BRANCH LOCATIONS

NEW YORK
5 NEPPERHAN AVENUE
ELMSFORD, NY. 10523
(914) 347-5656
(914) 347-5174 fax

81 EAST RT. 59
SPRING VALLEY, NY. 10977
(914) 356-7000
(914) 356-7068 fax

15 D PICONE BLVD.
FARMINGDALE, NY 11735
(631) 249-4694
(631) 249-4696 fax

603 FENIMORE RD
MAMARONECK, NY 10543
(914) 381-5520
(914) 381-5535 fax

NEW JERSEY
429 BELL STREET
PISCATAWAY, NJ 08854
(732) 752-7400
(732) 752-2021 fax

1738 GLASSBORO ROAD
WILLIAMSTOWN, NJ 08094
(856) 881-4446
(856) 881-0404 fax

1 COMO COURT
TOWACO, NJ 07082
(973) 335-8404
(973) 335-8406 fax

CONNECTICUT
1012 WETHERSFIELD AVENUE
HARTFORD, CT 06114
(860) 296-4804
(860) 296-4947 fax

1 SEIR HILL ROAD
NORWALK, CT 06850
(203) 845-0075
(203) 845-0078 fax

MINNESOTA
2797 EAGANDALE Blvd.
EAGAN, MN 55121
(651) 681-9133
(651) 681-9787 fax

286 COON RAPIDS BLVD.
COONS RAPIDS, MN 55433
(763) 795-8353
(763) 795-8328 fax

MICHIGAN
1985 ROCK RD
COMMERCE, MI 48390
(248) 669-9323
(248) 669-6981 fax

1250-B RANKIN DRIVE
TROY, MI 48083
(248) 669-9323
(248) 669-6981 fax

2645 28TH STREET SW
SUITE F
WYOMING, MI 49519
(616) 261-2700
(616) 261-1982 fax

RHODE ISLAND
75 BYFIELD ST.
WARWICK, RI 02888
(401) 461-4430
(401) 461-4431 fax

MASSACHUSSETTS
6 ATLANTIC AVE
SOUTH YARMOUTH, MA 02664
(508) 398-9800
(508) 398-9802 fax

MARYLAND
95 MONOCACY BLVD
UNIT BB-B9
FREDERICK, MD 21701
(301) 228-2916
(301) 228-2918 fax

GEORGIA
3451 B&C VAL DEL RD.
VALDOSTA, GA. 31602
(229) 241-9633
(229) 241-0727 fax

4229 STEVE REYNOLDS BLVD
NORCROSS, GA 30093
(770) 638-0055
(770) 638-0119 fax

5003 BURNHAM BLVD
COLUMBUS, GA. 31907
(706) 563-6099
(706) 563-6182 fax

101 PECAN STREET
BONAIRE, GA. 31005
(478) 923-2579
(478) 923-6655 fax

1519 WHITE CIRCLE ROAD
MARIETTA, GA. 30060
(770) 420-3395
(770) 420-3379 fax

1300 MEREDITH PARL DR.
McDONOUGH, GA 30253
(678) 432-2811
(770) 638-0119 fax

3156 BUFORD HWY.
BUFORD,GA 30518
(770) 831-8800
(770) 831-2070 fax

VIRGINIA
44208 WADE DRIVE UNIT A
CHANTILLY, VA 20152
(703) 327-9113
(703) 327-9917 fax

ALABAMA
801 LAKESIDE DRIVE SUITE B
MOBILE, AL 36693
(251) 662-9000
(251) 660-6688 fax

CANADA
7080 PACIFIC CIRCLE UNIT 3
MISSISSAUGA, ONT. L5T 2A7
(905) 795-8088
(905) 795-1152 fax

1149 BELLAMY RD UNIT 17
SCARBOROUGH, ONT. M1H-1H7
(416) 289-3344
(416) 439-1920 fax

17-79 BESSEMER RD.
LONDON, ONT. N6E-1P9
(519) 668-3234
(519)668-0834 fax

150 KATIMAVIK ROAD UNIT# 103
KANATA, ONT. K2L-2N2
(613) 254-7246
(613) 254-9268 fax

1325 TEES STREET
ST. LAURENT, QC. H4R-2A7
(514) 788-5884
(514) 788-5886 fax

MISSOURI
1000 KATHRYN ST.
NIXA, MO 65714
(417) 724-9696
(417) 724-1717fax

8676 OLIVE BLVD.
ST. LOUIS, MO 63132
(314) 994-2131
(314) 994-2132 fax

ILLINOIS
960 N. RIDGE AVE.
LOMBARD, IL 60148
(630) 495-5500
(630) 495-5501 fax

WISCONSIN
5800 W. HEMLOCK ST.
UNIT#2
MILWAUKEE, WI 53323
(414) 760-1600
(414) 760-1617 fax

Firm Name and Address

GREAT NORTHERN LANDSCAPES

Project Name and Address

NORTH PARK COMMONS

Project: CoonsNorthParkCommons041012	Sheet: IR-01
Date: 04/20/12	
Drawn by: OG	Checked by: JP
Scale: 1" = 50'-0"	

THIS DESIGN DRAWING IS THE PROPERTY OF CENTRAL IRRIGATION SUPPLY INC., ANY UNAUTHORIZED USE, ALTERATION OR DUPLICATION THEREOF IS PROHIBITED.