SHEET INDEX

C0 COVER SHEET

STORM SEWER AND STREET CONSTRUCTION

C1 172nd AVE NW
C2 IODINE ST NW

EROSION CONTROL, LANDSCAPING AND DETAILS

G1 GRADING PLAN
D1 DETAILS
D2 DETAILS
D3 DETAILS
SW 1 STORMWATER POLLUTION PREVENTION PLAN
SW 2 STORMWATER POLLUTION PREVENTION PLAN
L1 OVERALL LANDSCAPING PLAN
T1 TREE PLAN
T2 TREE PLAN

LINE TYPE & SYMBOL LEGEND

- SB-5 — DENOTES SOIL BORING
- P | S — DRAIN FIELD LOC P = PRIMARY S = SECONDARY
- W — PROPOSED WELL LOC.
- SETBACK
- EASEMENT
- LOT LINE
- R/W
- EDGE OF BITUMINOUS
- CENTERLINE

OWNER:
Eric Thomsen
6210 Green Valley Road
Ramsey, Minnesota 55303
Phone: (612) 919-6862

LOCATION MAP "NOT TO SCALE"

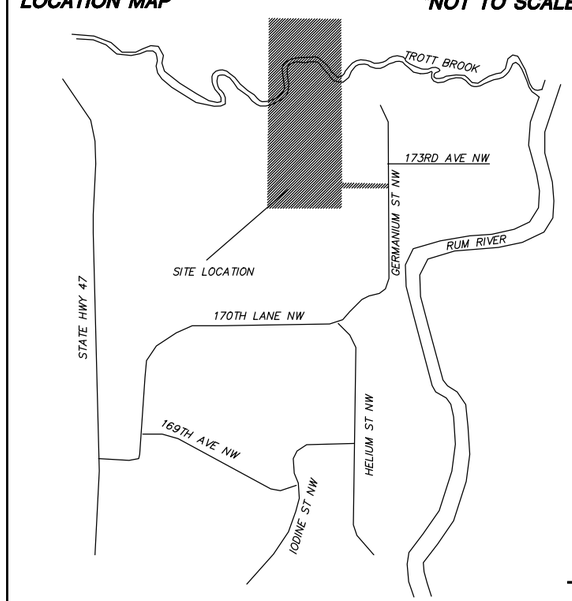

RAMSEY, MINNESOTA — ANOKA COUNTY

GRAPHIC SCALE
60 0 30 60 120
(IN FEET)

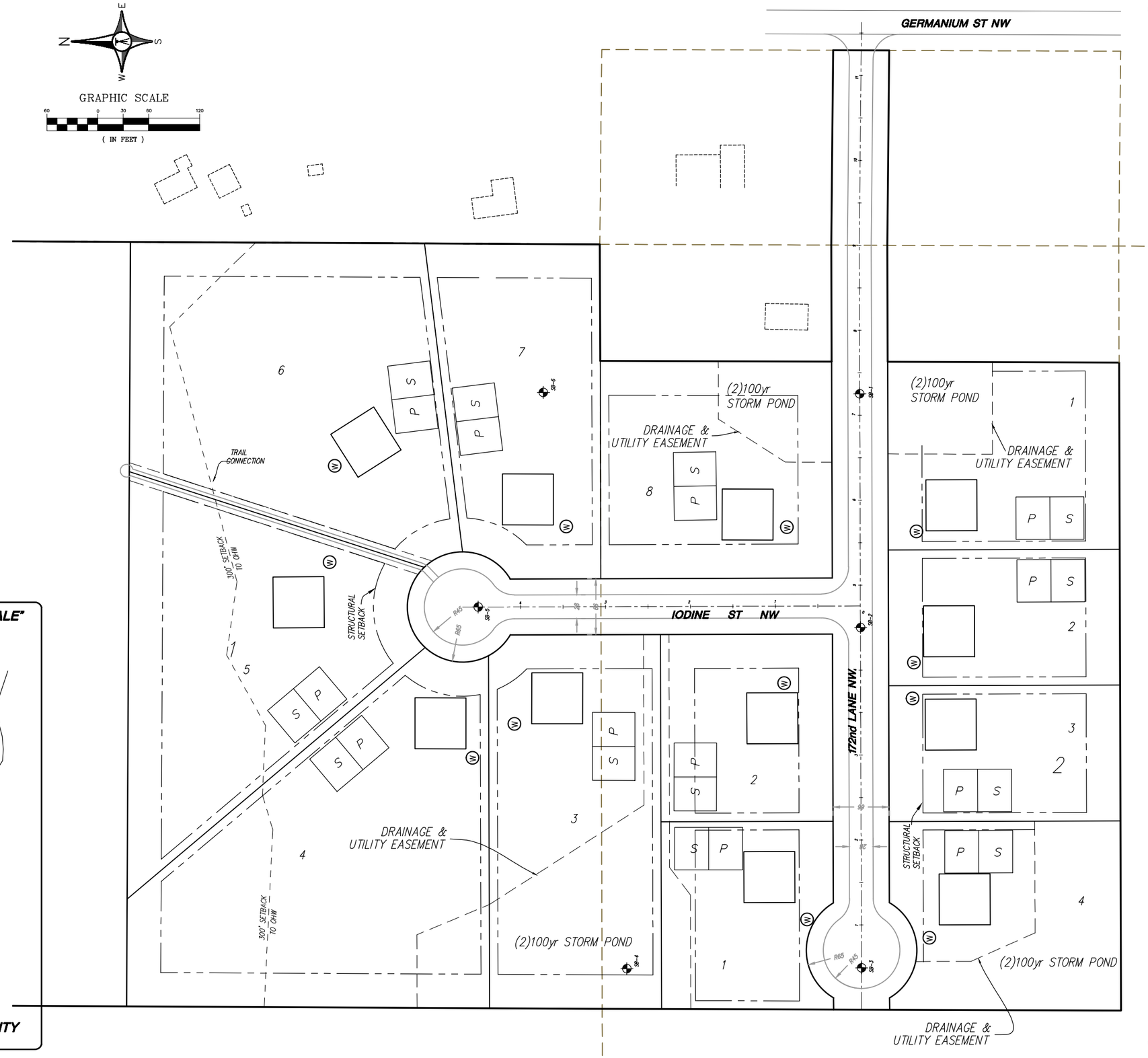

DATE	REVISIONS	BY
3/23/17	ADDED SHEET TO SET	BR

RECORD DRAWING

ROSHELL ENGINEERING, LLC
6192 267 TH CT WYOMING, MN 55092
PHONE: 763.286.0521

COVENANT MEADOWS

COVER SHEET

RAMSEY, MINNESOTA

I HEREBY CERTIFY THAT THIS PLAN, SPECIFICATION, OR REPORT WAS PREPARED BY ME OR UNDER MY DIRECT SUPERVISION AND THAT I AM A DULY LICENSED PROFESSIONAL ENGINEER UNDER THE LAWS OF THE STATE OF MINNESOTA.

DATE 3/23/17 REG. NO. 24019

Brent Roshell

BRENT ROSHELL

DRAWN	BR
DATE	12/19/16
SCALE	AS SHOWN
PROJECT	RE-32
CHECKED	BTR
APPROVED	BTR

C0

172ND LANE NW IS 1163 FEET IN LENGTH FROM THE CENTERLINE OF GERMANIUM ST NW TO THE WESTERN BOUNDARY OF THE PLAT.

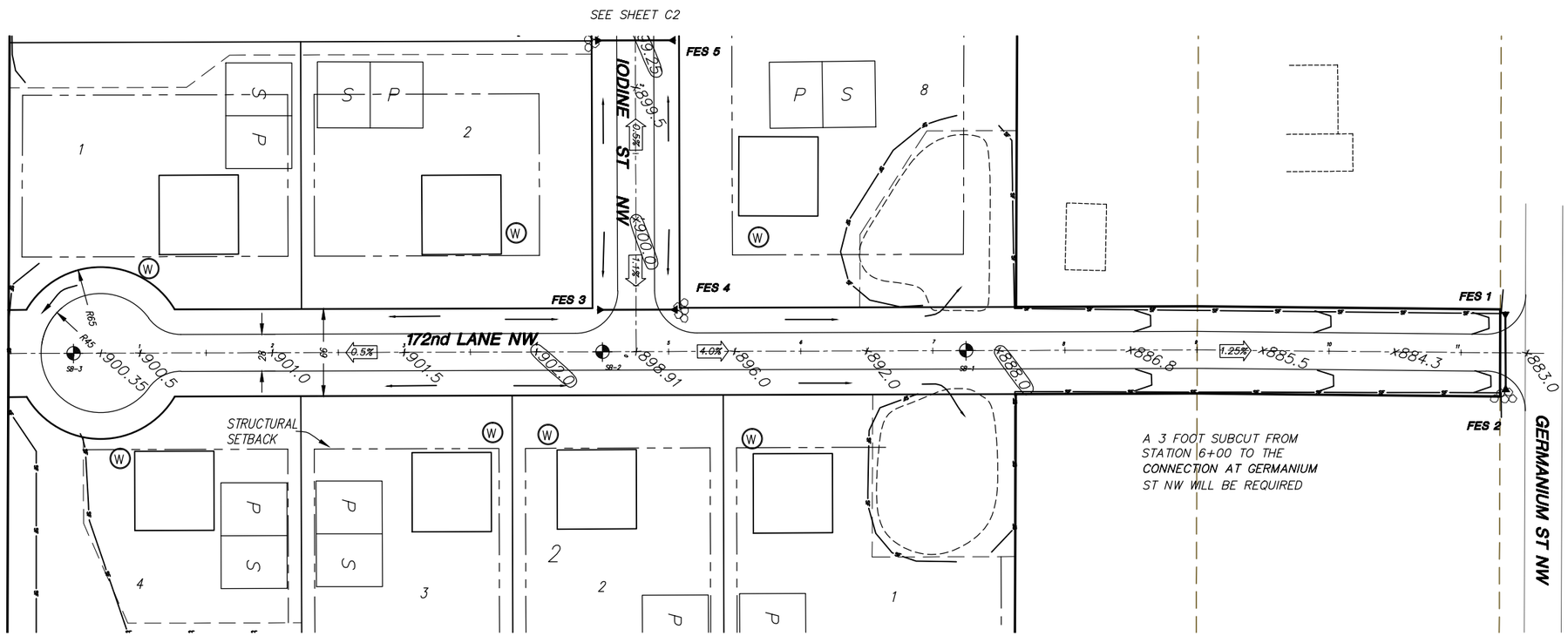

LINE TYPE & SYMBOL LEGEND

- FLARED END SECTION
- STORM SEWER
- SB-5 DENOTES SOIL BORING
- P S DRAIN FIELD LOC P = PRIMARY S = SECONDARY
- W PROPOSED WELL LOC.
- SF SILT FENCE
- SETBACK
- EASEMENT
- LOT LINE
- R/W
- EDGE OF BITUMINOUS
- CENTERLINE

N W E S

HORIZONTAL 50 0 50 100

VERTICAL 5 0 5 10

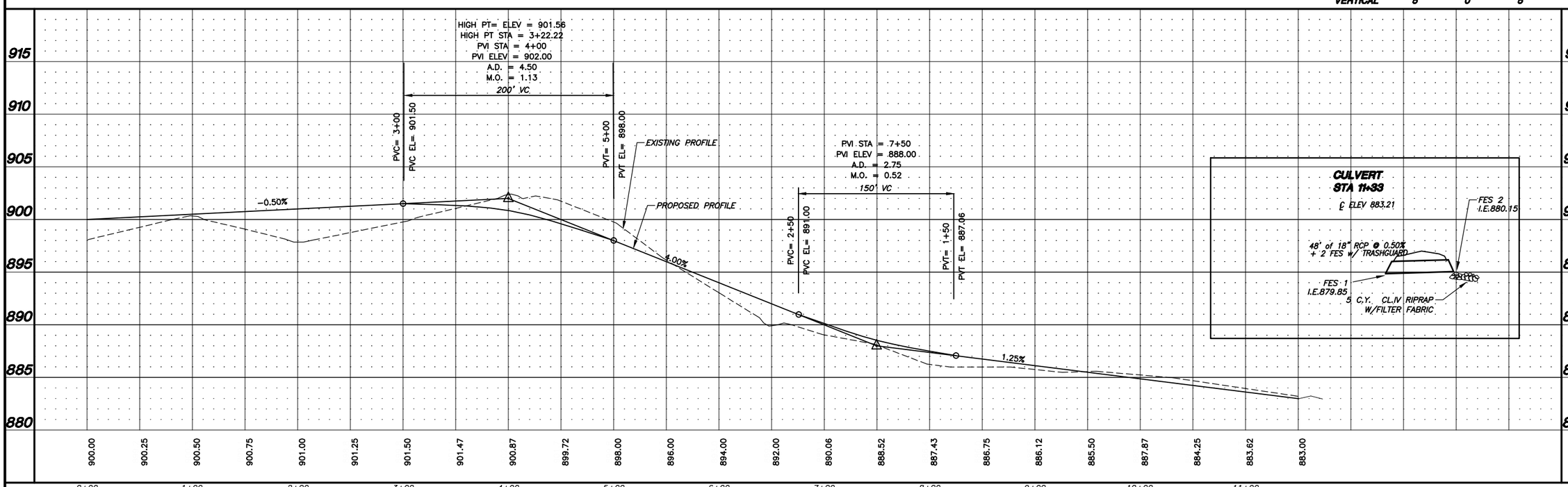

BY	REVISIONS	DATE
BR	LEGEND	3/23/17

RECORD DRAWING

ROSHELL ENGINEERING, LLC
6192 267 TH CT WYOMING, MN 55092
PHONE: 763.286.0521

COVENANT MEADOWS

STREET & STORM SEWER
172nd LANE NW
RAMSEY, MINNESOTA

I HEREBY CERTIFY THAT THIS PLAN, SPECIFICATION, OR REPORT WAS PREPARED BY ME OR UNDER MY DIRECT SUPERVISION AND THAT I AM A DULY LICENSED PROFESSIONAL ENGINEER UNDER THE LAWS OF THE STATE OF MINNESOTA.

DATE 2/2/17 REG. NO. 24019

BRENT ROSHELL

DRAWN	BR
DATE	12/19/16
SCALE	1"=50'
PROJECT	RE-32
CHECKED	BTR
APPROVED	BTR

C1

Z:\ALS JOBS\2003\129-03\129-03.dwg 1/5/2009 12:51:46 PM CST

LINE TYPE & SYMBOL LEGEND

- FLARED END SECTION
- STORM SEWER
- SB-5 DENOTES SOIL BORING
- P | S DRAIN FIELD LOC P = PRIMARY S = SECONDARY
- W PROPOSED WELL LOC.
- SF SILT FENCE
- SETBACK
- EASEMENT
- LOT LINE
- R/W
- EDGE OF BITUMINOUS
- CENTERLINE

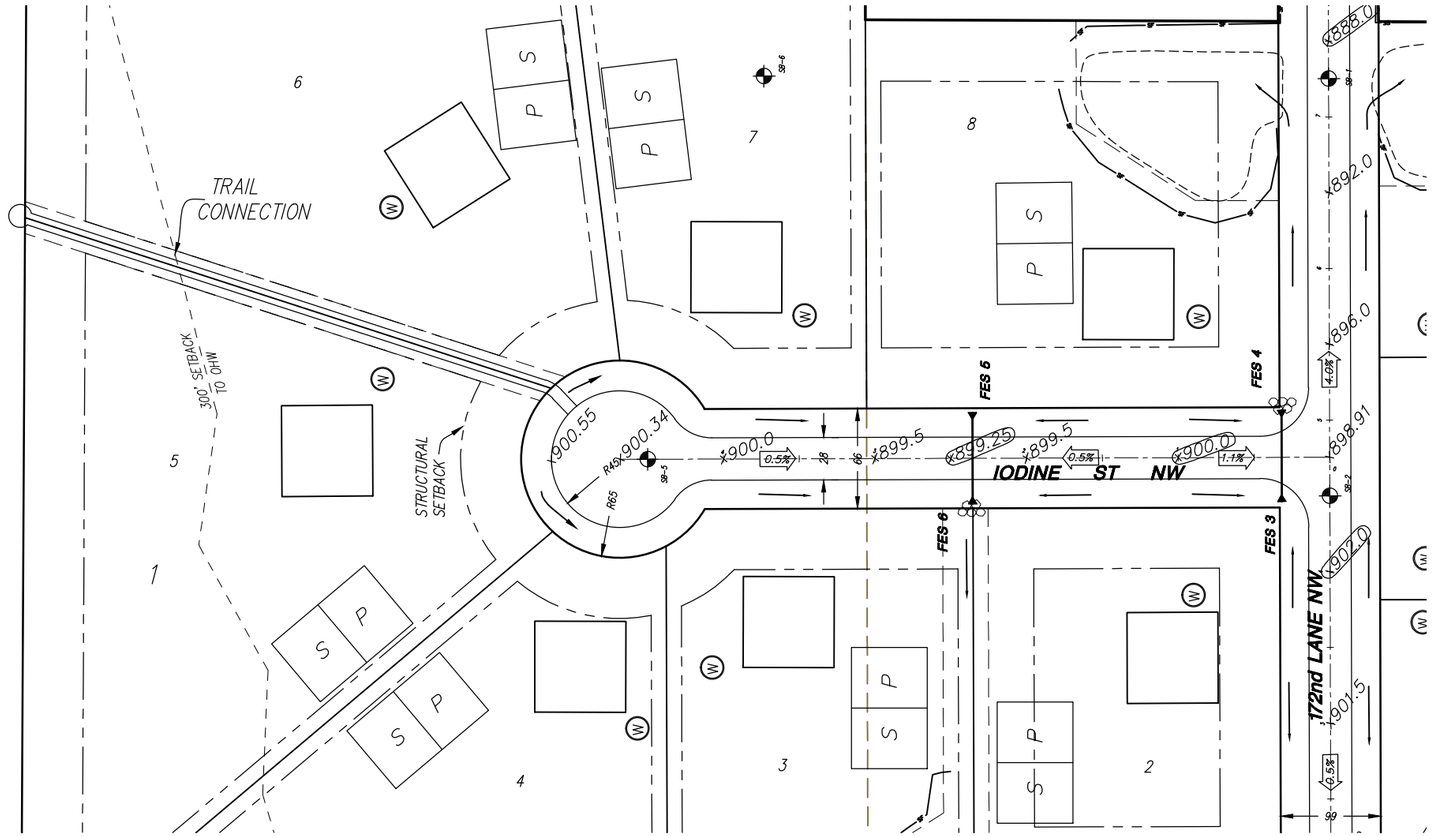

IODINE ST NW IS 513 FEET IN LENGTH FROM THE CENTERLINE OF 172ND LANE NW TO THE NORTH EDGE OF THE CUL-DE-SAC TRAVEL SURFACE

HORIZONTAL 50 0 50 100

VERTICAL 5 0 5 10

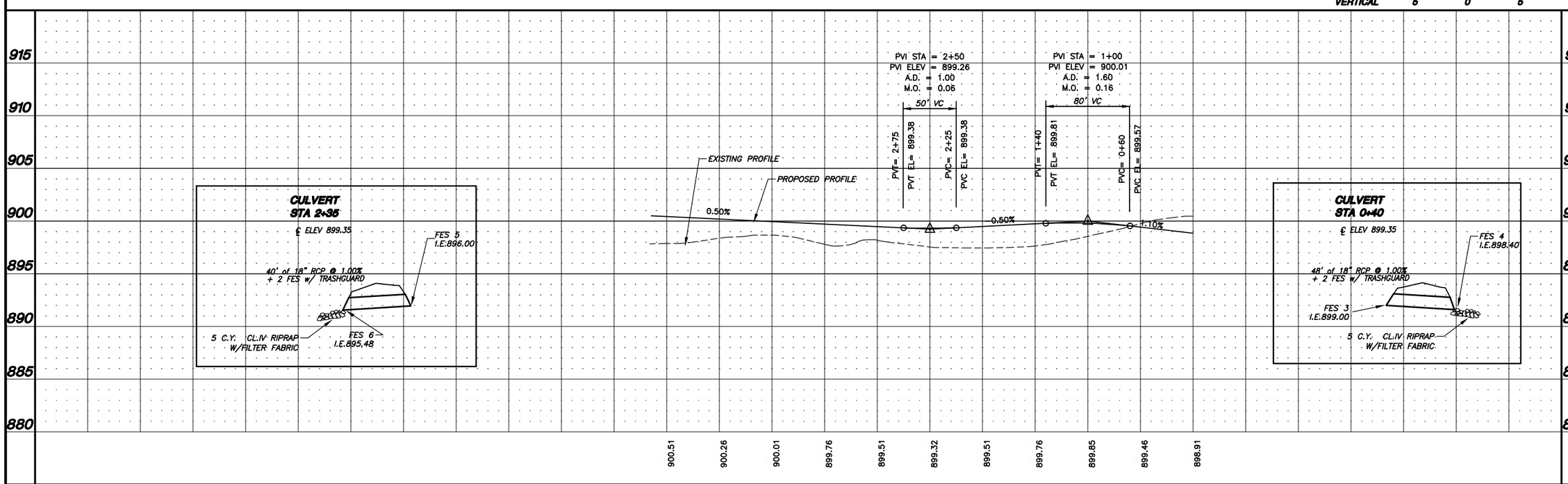

DATE	REVISIONS	BY
3/23/17	LEGEND	BR

RECORD DRAWING

ROSHELL ENGINEERING, LLC
6192 267 TH CT WYOMING, MN 55092
PHONE: 763.286.0521

COVENANT MEADOWS

STREET & STORM SEWER
IODINE ST NW
RAMSEY, MINNESOTA

I HEREBY CERTIFY THAT THIS PLAN, SPECIFICATION, OR REPORT WAS PREPARED BY ME OR UNDER MY DIRECT SUPERVISION AND THAT I AM A DULY LICENSED PROFESSIONAL ENGINEER UNDER THE LAWS OF THE STATE OF MINNESOTA.

DATE 3/23/17 REG. NO. 24019

BRENT ROSHELL

DRAWN	BR
DATE	12/19/16
SCALE	1"=50'
PROJECT	RE-32
CHECKED	BTR
APPROVED	BTR

C2

Z:\ALS JOBS\2003\129-03\129-03.dwg 1/5/2009 12:51:46 PM CST

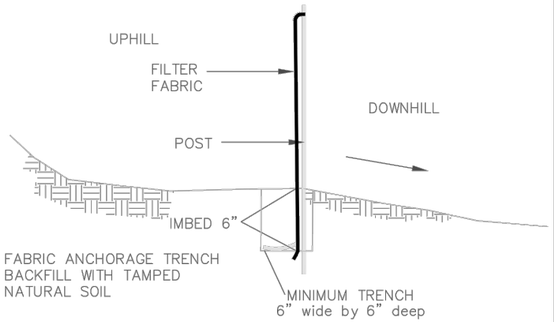

INSTALL AS PER FILTER FABRIC MANUFACTURER'S RECOMMENDATIONS

SILT FENCE DETAIL

NO SCALE

APPROVED: 1 – 2016	City of RAMSEY	STANDARD DETAILS: SILT FENCE
		CITY PLATE No. ERO–1

ON SLOPES 4:1 OR GREATER, ANCHOR OR STRAIGHT DISKED STRAW MULCH, SEEDED NETTING, FABRIC, OR MATTING SUCH AS EXCELSIOR SHALL BE USED TO STABILIZE DISTURBED SOILS. THESE EXPOSED SOILS MUST BE STABILIZED IMMEDIATELY AFTER GRADING OF SOIL IS COMPLETE.

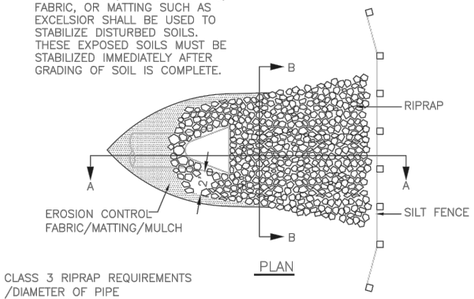

PLAN

CLASS 3 RIPRAP REQUIREMENTS /DIAMETER OF PIPE
12" TO 24" 4 CUBIC YARDS
27" TO 33" 8 CUBIC YARDS
36" TO 48" 12 CUBIC YARDS
54" AND UP 16 CUBIC YARDS
(ONE CUBIC YARD IS APPROX. 2,800 LBS.)

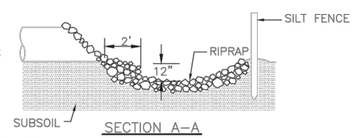

SECTION A–A

A SKIRTING OF EROSION CONTROL FABRIC OR MULCH MUST BE USED TO PROTECT OUTLETS AS ILLISTRATED REGARDLESS OF SLOPE

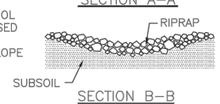

SECTION B–B

RIP–RAP AT R.C.P. OUTLET

NO SCALE

APPROVED: 1 – 2016	City of RAMSEY	STANDARD DETAILS: RIP–RAP
		CITY PLATE No. ERO–3

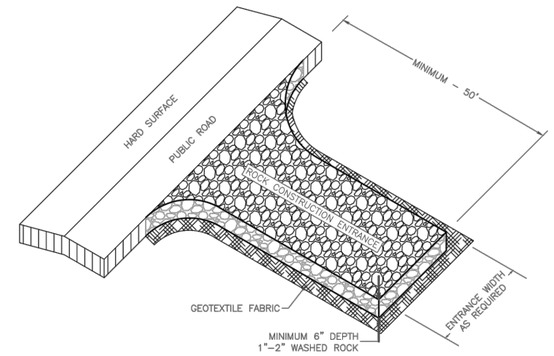

NOTE:
1. MINIMUM CONSTRUCTION ENTRANCE WIDTH EQUAL TO PROPOSED ROADWAY WIDTH.
2. WIDTH OF RADIUS AS REQUIRED TO ENSURE VEHICLES DO NOT TRACK ONTO PUBLIC ROAD.
3. MAINTAINENCE AS REQUIRED TO PREVENT TRACKING ONTO PUBLIC ROADS. THIS MAY REQUIRE TOP DRESSING WITH ADDITIONAL ROCK OR REMOVAL AND REINSTALLATION OF THE ENTRANCE AS NEEDED.

NOT TO SCALE

APPROVED: 1 – 2016	City of RAMSEY	STANDARD DETAILS: ROCK CONSTRUCTION ENTRANCE
		CITY PLATE No. ERO–5

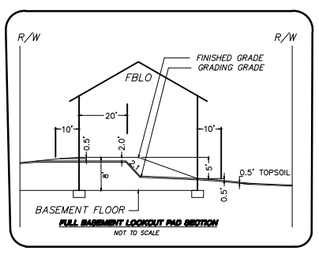

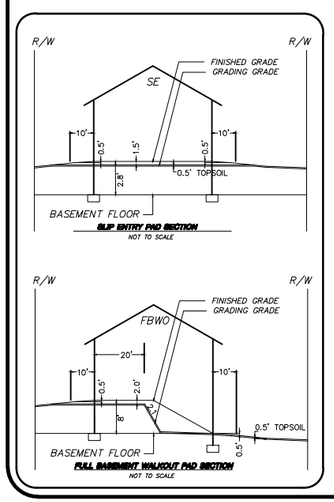

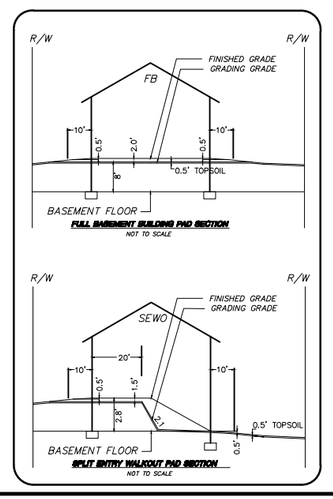

MNDOT 2016 SPEC

MNDOT 2016 SPEC TABLE 3877–1 COMMON TOPSOIL BORROW		
REQUIREMENT	RANGE	TEST METHOD
MATERIAL PASSING THE 3/4 IN [19MM]	100%	ASTM D 422
MATERIAL PASSING NO. 4 [4.75MM]	>85%	–
CLAY	5% –35%	ASTM D 422
SILT	5% – 70%	ASTM D 422
SAND	10% – 75%	ASTM D 422
ORGANIC MATTER	3% – 15%	ASTM D 2974
pH	6.1–7.8	ASTM G 51

NOTE:
1. INSTALLATION OF 4" OF TOPSOIL MEETING MNDOT SPECIFICATION 3877A COMMON TOPSOIL BORROW, MAY BE REQUIRED ACROSS ALL DISTURBED AREAS.
2. A SOIL CERTIFICATION FROM A GEOTECHNICAL FIRM MUST BE PROVIDED VERIFYING THE TOPSOIL MEETS SPECIFICATION ALONG WITH LOAD TICKETS TO VERIFY THE SOURCE OF MATERIAL AND QUANTITY.
3. TOPSOIL MUST COME FROM A CITY APPROVED SOURCE.

APPROVED: 1 – 2016	City of RAMSEY	CITY PLATE No. ERO–6	STANDARD DETAILS: TOPSOIL REQUIREMENTS

NOTE:
GUARDS MUST BE INCORPORATED ON ALL INSTALLATIONS EXCEPT WHERE SPECIFICALLY ALLOWED OTHERWISE BY THE CITY ENGINEER.

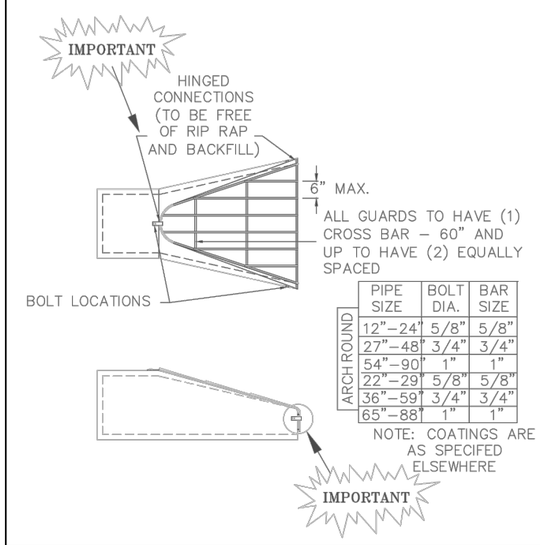

	PIPE SIZE	BOLT DIA.	BAR SIZE
ARCH ROUND	12"–24"	5/8"	5/8"
	27"–48"	3/4"	3/4"
	54"–90"	1"	1"
	22"–29"	5/8"	5/8"
	36"–59"	3/4"	3/4"
	65"–88"	1"	1"

NOTE: COATINGS ARE AS SPECIFED ELSEWHERE

APPROVED: 2 – 2006	City of RAMSEY	STANDARD DETAILS: TRASH GUARD
		CITY PLATE No. STO–8

DATE	REVISIONS	BY
3/23/17	ADDED SHEET TO SET	BR

RECORD DRAWING

ROSHELL ENGINEERING, LLC
6192 267 TH CT WYOMING, MN 55092
PHONE: 763.286.0521

COVENANT MEADOWS

DETAILS

RAMSEY, MINNESOTA

I HEREBY CERTIFY THAT THIS PLAN, SPECIFICATION, OR REPORT WAS PREPARED BY ME OR UNDER MY DIRECT SUPERVISION AND THAT I AM A DULY LICENSED PROFESSIONAL ENGINEER UNDER THE LAWS OF THE STATE OF MINNESOTA.

DATE 2/2/17 REG. NO. 24019

BRENT ROSHELL

DRAWN	BR
DATE	12/19/16
SCALE	–
PROJECT	RE–32
CHECKED	BTR
APPROVED	BTR

D1

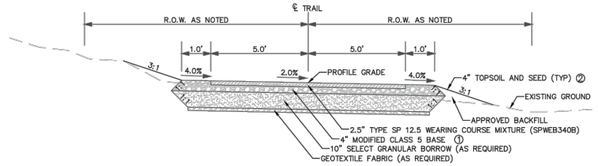

TYPICAL SECTION

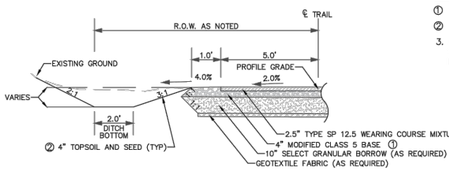

DITCH SECTION

NOTES:

① SEE CITY PLATE STR-26

② SEE CITY PLATE ERO-6

3. APPROVED TOPSOIL MUST MEET ORGANIC CONTENT SPECIFICATIONS FOR ENTIRE BOULEVARD IN AREAS INCLUDING BOULEVARD TREES.

NOTE: NOT TO SCALE

APPROVED: 1 - 2016	City of RAMSEY	CITY PLATE No. PARK-1	STANDARD DETAILS: BITUMINOUS TRAIL

TABLE A
MODIFIED CLASS 5 SPECIFICATIONS

% PASSING	
1"	100
3/4"	90 – 100
3/8"	50 – 80
No.4	35 – 70
No.10	20 – 60
No.40	10 – 35
No.200	5 – 10

NOTES:
1. THE AGGREGATE BASE CONSTRUCTION WILL BE ACCEPTED FOR PAYMENT IN ACCORDANCE WITH THE PROVISIONS IN TABLE A.
2. IF THE AGGREGATE BASE FAILS TO MEET THE REQUIREMENTS OF TABLE A THE MATERIAL CAN BE CORRECTED IN PLACE OR REMOVED AND REPLACED WITH MATERIAL THAT MEET THE REQUIREMENTS OF TABLE A.
3. IN THE EVENT THAT RECYCLED MATERIAL IS USE IT MUST MEET MNDOT REQUIREMENTS FOR RECYCLED BASE.

APPROVED: 2 - 2003	City of RAMSEY	STANDARD DETAILS: MODIFIED CLASS 5 SPECIFICATIONS
		CITY PLATE No. STR-26

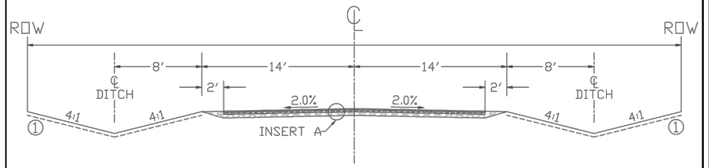

INSERT A:

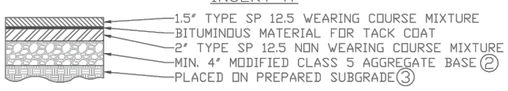

REFERENCE NOTES:

① GRADE TO MATCH EXISTING SURFACE MINIMUM 4" COMMON TOPSOIL BORROW, SEED AND MULCH IN ALL DISTURBED AREAS. SEE CITY PLATE No. ERO-6

② CLASS 5 GRADATION IS MODIFIED PER CITY PLATE No. STR-26

③ CONTRACTOR SHALL SCARIFY AND COMPACT, ACCORDING TO THE SPECIFIED DENSITY METHOD, THE TOP 12 INCHES OF MATERIAL PRIOR TO PLACING ANY FILL MATERIALS OR CLASS 5 AGGREGATE BASE.

NOTE: NOT TO SCALE

APPROVED: 4 - 2016	City of RAMSEY	CITY PLATE No. STR-6	STANDARD DETAILS: 28' - RURAL STREET

BITUMINOUS BASE – SPNWB 330B
BITUMINOUS WEAR – SPWEA 330B

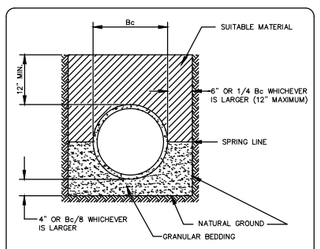

NOTE: ALL COSTS OF EXCAVATION BELOW GRADE AND PLACEMENT OF GRANULAR BEDDING SHALL BE INCLUDED IN THE BID PRICES FOR PIPE ITEMS.

CLASS B PIPE BEDDING

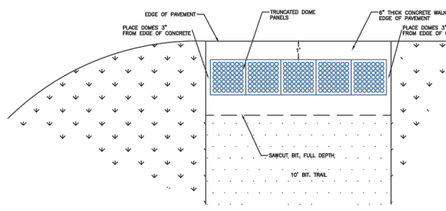

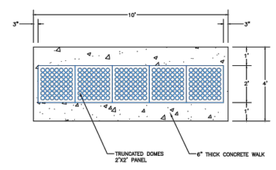

NOTE:
1. SAWCUT BIT. FULL DEPTH / REMOVE BIT.
2. PLACE 6" THICK CONCRETE FOR TRUNCATED DOMES UP TO EDGE OF PAVEMENT.
3. MEDIUM BROOM FINISH ON CONCRETE
4. MAINTAIN 3" FROM EDGE OF TRUNCATED DOMES AND CONCRETE EDGE.
5. IT MAY BE NECESSARY TO TRIM TRUNCATED DOME PANELS.

NOTE: NOT TO SCALE

APPROVED: 7 – 2015	City of RAMSEY	STANDARD DETAILS: TRUNCATED DOME PLACEMENT – BITUMINOUS TRAIL NO CURB
		CITY PLATE No. STR-28

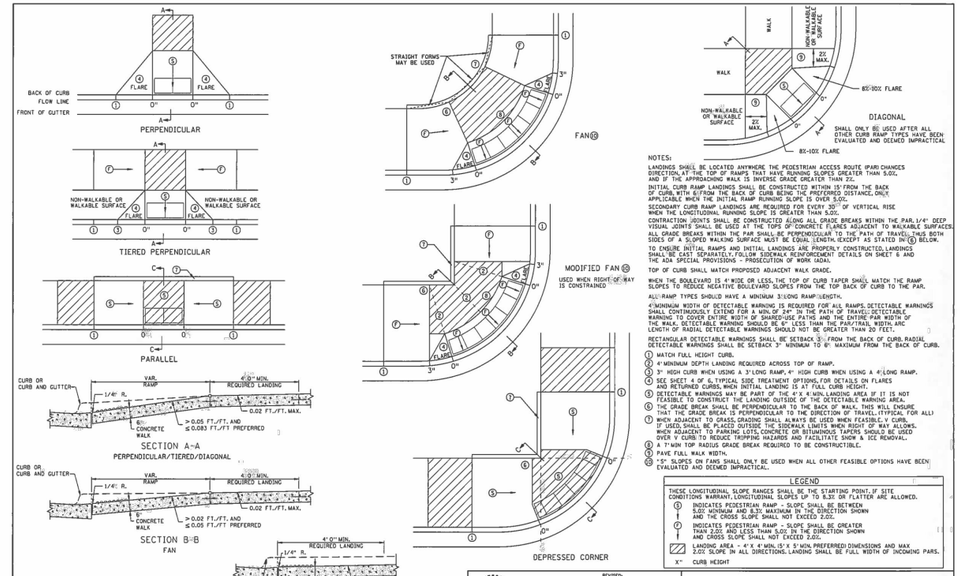

NOTES:

LANDINGS SHALL BE LOCATED ANYWHERE THE PEDESTRIAN ACCESS ROUTE (PAR) CHANGES DIRECTION, AT THE TOP OF RAMPS THAT HAVE RUNNING SLOPES GREATER THAN 5.0%, AND IF THE APPROACHING WALK IS INVERSE GRADE GREATER THAN 2%.

INITIAL CURB RAMP LANDINGS SHALL BE CONSTRUCTED WITHIN 15' FROM THE BACK OF CURB, WITH 6'/FROM THE BACK OF CURB BEING THE PREFERRED DISTANCE, ONLY APPLICABLE WHEN THE INITIAL RAMP RUNNING SLOPE IS OVER 5.0%.

SECONDARY CURB RAMP LANDINGS ARE REQUIRED FOR EVERY 30" OF VERTICAL RISE WHEN THE LONGITUDINAL RUNNING SLOPE IS GREATER THAN 5.0%.

CONTRACTION JOINTS SHALL BE CONSTRUCTED ALONG ALL GRADE BREAKS WITHIN THE PAR, 1/4" DEEP VISUAL JOINTS SHALL BE USED AT THE TOPS OF CONCRETE FLARES ADJACENT TO WALKABLE SURFACES. ALL GRADE BREAKS WITHIN THE PAR SHALL BE PERPENDICULAR TO THE PATH OF TRAVEL, THIS BOTH SIDES OF A SLOPED WALKING SURFACE MUST BE EQUAL LENGTH, EXCEPT AS STATED IN ⑥ BELOW.

TO ENSURE INITIAL RAMPS AND INITIAL LANDINGS ARE PROPERLY CONSTRUCTED, LANDINGS SHALL BE CAST SEPARATELY, FOLLOW SIDEWALK REINFORCEMENT DETAILS ON SHEET 6 AND THE ADA SPECIAL PROVISIONS - PROSECUTION OF WORK (ADA).

TOP OF CURB SHALL MATCH PROPOSED ADJACENT WALK GRADE.

WHEN THE BOULEVARD IS 4' WIDE OR LESS, THE TOP OF CURB TAPER SHALL MATCH THE RAMP SLOPES TO REDUCE NEGATIVE BOULEVARD SLOPES FROM THE TOP BACK OF CURB TO THE PAR.

ALL RAMP TYPES SHOULD HAVE A MINIMUM 3' LONG RAMP LENGTH.

4' MINIMUM WIDTH OF DETECTABLE WARNING IS REQUIRED FOR ALL RAMPS. DETECTABLE WARNINGS SHALL CONTINUOUSLY EXTEND FOR A MIN. OF 24" IN THE PATH OF TRAVEL. DETECTABLE WARNING TO COVER ENTIRE WIDTH OF SHARED-USE PATHS AND THE ENTIRE PAR WIDTH OF THE WALK. DETECTABLE WARNING SHOULD BE 6" LESS THAN THE PAR/TRAIL WIDTH. ARC LENGTH OF RADIAL DETECTABLE WARNINGS SHOULD NOT BE GREATER THAN 20 FEET.

RECTANGULAR DETECTABLE WARNINGS SHALL BE SETBACK 3'/FROM THE BACK OF CURB. RADIAL DETECTABLE WARNINGS SHALL BE SETBACK 3" MINIMUM TO 6" MAXIMUM FROM THE BACK OF CURB.

① MATCH FULL HEIGHT CURB.
② 4' MINIMUM DEPTH LANDING REQUIRED ACROSS TOP OF RAMP.
③ 3" HIGH CURB WHEN USING A 3' LONG RAMP, 6" HIGH CURB WHEN USING A 4' LONG RAMP.
④ SEE SHEET 4 OF EL CASO STORM TREATMENT OPTIONS FOR DETAILS ON FLARES AND RETURNED CURBS, WHEN INITIAL LANDING IS AT FULL CURB HEIGHT.
⑤ DETECTABLE WARNINGS MAY BE PART OF THE 4' X 4' MIN. LANDING AREA IF IT IS NOT FEASIBLE TO CONSTRUCT THE LANDING OUTSIDE OF THE DETECTABLE WARNING AREA.
⑥ THE GRADE BREAK SHALL BE PERPENDICULAR TO THE BACK OF CURB. THIS WILL ENSURE THE GRADE BREAK IS PERPENDICULAR TO THE PATH OF TRAVEL. THIS IS ALSO ADA COMPLIANT FOR ALL
⑦ WHEN ADJACENT TO GRASS, GRADING SHALL ALWAYS BE CONSTRUCTED WHEN FEASIBLY / CURB. IF USED, SHALL BE PLACED OUTSIDE THE SIDEWALK LIMITS WHEN RIGHT-OF-WAY ALLOWS. WHEN ADJACENT TO PARKING LOTS, CONCRETE OR BITUMINOUS TAPERS SHOULD BE USED OVER V CURB TO REDUCE TRIPPING HAZARDS AND FACILITATE SNOW & ICE REMOVAL.
⑧ A 7' MIN TOP RADIUS GRADE BREAK REQUIRED TO BE CONSTRUCTIBLE.
⑨ PAVE FULL WALK WIDTH.
⑩ "5" SLOPES ON FANS SHALL ONLY BE USED WHEN ALL OTHER FEASIBLE OPTIONS HAVE BEEN EVALUATED AND DEEMED IMPRACTICAL.

LEGEND

THESE LONGITUDINAL SLOPE RANGES SHALL BE THE STARTING POINT, IF SITE CONDITIONS WARRANT, LONGITUDINAL SLOPES UP TO 8.33 OR FLATTER ARE ALLOWED.

Ⓘ INDICATES PEDESTRIAN RAMP - SLOPE SHALL BE BETWEEN 5.00 AND LESS THAN 5.01 IN THE DIRECTION SHOWN AND THE CROSS SLOPE SHALL NOT EXCEED 2.00.

Ⓟ INDICATES PEDESTRIAN RAMP - SLOPE SHALL BE GREATER THAN 2.00 AND LESS THAN 5.00 IN THE DIRECTION SHOWN AND CROSS SLOPE SHALL NOT EXCEED 2.00.

LANDING AREA - 4' X 4' MIN. (5' X 5' MIN. PREFERRED) DIMENSIONS AND MAX 2.00 SLOPE IN ALL DIRECTIONS. LANDING SHALL BE FULL WIDTH OF INCOMING PARS.

X" CURB HEIGHT

REVISION:
APPROVED: JANUARY 23, 2017
OPERATIONS ENGINEER

REVISED:
APPROVED: 1-23-2017
STATE DESIGN ENGINEER

PEDESTRIAN CURB RAMP DETAILS	
STANDARD PLAN 5-297.250	1 OF 6

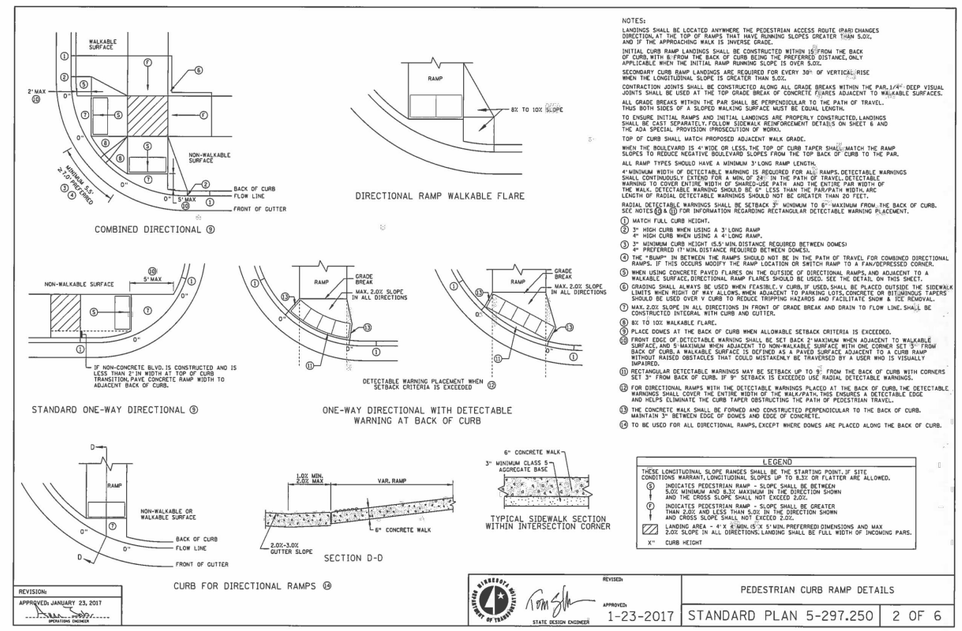

NOTES:

LANDINGS SHALL BE LOCATED ANYWHERE THE PEDESTRIAN ACCESS ROUTE (PAR) CHANGES DIRECTION, AT THE TOP OF RAMPS THAT HAVE RUNNING SLOPES GREATER THAN 5.00, AND IF THE APPROACHING WALK IS INVERSE GRADE.

INITIAL CURB RAMP LANDINGS SHALL BE CONSTRUCTED WITHIN 15' FROM THE BACK OF CURB, WITH 6'/FROM THE BACK OF CURB BEING THE PREFERRED DISTANCE, ONLY APPLICABLE WHEN THE INITIAL RAMP RUNNING SLOPE IS OVER 5.0%.

SECONDARY CURB RAMP LANDINGS ARE REQUIRED FOR EVERY 30" OF VERTICAL RISE WHEN THE LONGITUDINAL SLOPE IS GREATER THAN 5.00.

CONTRACTION JOINTS SHALL BE CONSTRUCTED ALONG ALL GRADE BREAKS WITHIN THE PAR, 1/4" DEEP VISUAL JOINTS SHALL BE USED AT THE TOP GRADE BREAK OF CONCRETE FLARES ADJACENT TO WALKABLE SURFACES.

ALL GRADE BREAKS WITHIN THE PAR SHALL BE PERPENDICULAR TO THE PATH OF TRAVEL, THUS BOTH SIDES OF A SLOPED WALKING SURFACE MUST BE EQUAL LENGTH.

TO ENSURE INITIAL RAMPS AND INITIAL LANDINGS ARE PROPERLY CONSTRUCTED, LANDINGS SHALL BE CAST SEPARATELY, FOLLOW SIDEWALK REINFORCEMENT DETAILS ON SHEET 6 AND THE ADA SPECIAL PROVISION (PROSECUTION OF WORK).

TOP OF CURB SHALL MATCH PROPOSED ADJACENT WALK GRADE.

WHEN THE BOULEVARD IS 4' WIDE OR LESS, THE TOP OF CURB TAPER SHALL MATCH THE RAMP SLOPES TO REDUCE NEGATIVE BOULEVARD SLOPES FROM THE TOP BACK OF CURB TO THE PAR.

ALL RAMP TYPES SHOULD HAVE A MINIMUM 3' LONG RAMP LENGTH.

4' MINIMUM WIDTH OF DETECTABLE WARNING IS REQUIRED FOR ALL RAMPS. DETECTABLE WARNINGS SHALL CONTINUOUSLY EXTEND FOR A MIN. OF 24" IN THE PATH OF TRAVEL. DETECTABLE WARNING TO COVER ENTIRE WIDTH OF SHARED-USE PATHS AND THE ENTIRE PAR WIDTH OF THE WALK. DETECTABLE WARNING SHOULD BE 6" LESS THAN THE PAR/TRAIL WIDTH. ARC LENGTH OF RADIAL DETECTABLE WARNINGS SHOULD NOT BE GREATER THAN 20 FEET.

RADIAL DETECTABLE WARNINGS SHALL BE SETBACK 3" MINIMUM TO 6" MAXIMUM FROM THE BACK OF CURB. SEE NOTES ⑥ & ⑪ FOR INFORMATION REGARDING RECTANGULAR DETECTABLE WARNING PLACEMENT.

① MATCH FULL CURB HEIGHT.
② 3" HIGH CURB WHEN USING A 3' LONG RAMP
4" HIGH CURB WHEN USING A 4' LONG RAMP.
③ 3" MINIMUM CURB HEIGHT (5.5' MIN. DISTANCE REQUIRED BETWEEN DOMES)
6" PREFERRED (7' MIN. DISTANCE REQUIRED BETWEEN DOMES).
④ THE "RAMP" IN BETWEEN THE RAMPS SHOULD NOT BE IN THE PATH OF TRAVEL FOR COMBINED DIRECTIONAL RAMPS. IF THIS OCCURS MODIFY THE RAMP LOCATION OR SWITCH RAMP TO A FAN/DEPRESSED CORNER.
⑤ WHEN USING CONCRETE PAVED FLARES ON THE OUTSIDE OF DIRECTIONAL RAMPS, AND ADJACENT TO A WALKABLE SURFACE, DIRECTIONAL RAMP FLARES SHOULD BE USED. SEE THE DETAIL ON THIS SHEET.
⑥ GRADING SHALL ALWAYS BE USED WHEN FEASIBLE. V CURB, IF USED, SHALL BE PLACED OUTSIDE THE SIDEWALK LIMITS WHEN RIGHT OF WAY ALLOWS. WHEN ADJACENT TO PARKING LOTS, CONCRETE OR BITUMINOUS TAPERS SHOULD BE USED OVER V CURB TO REDUCE TRIPPING HAZARDS AND FACILITATE SNOW & ICE REMOVAL.
⑦ MAX. 2.0% SLOPE IN ALL DIRECTIONS IN FRONT OF GRADE BREAK AND DRAIN TO FLOW LINE. SHALL BE CONSTRUCTED INTEGRAL WITH CURB AND GUTTER.
⑧ 8X TO 10X WALKABLE FLARE.
⑨ PLACE DOMES AT THE BACK OF CURB WHEN ALLOWABLE SETBACK CRITERIA IS EXCEEDED.
⑩ FRONT EDGE OF DETECTABLE WARNING SHALL BE SET BACK 2' MAXIMUM WHEN ADJACENT TO WALKABLE SURFACE, AND 5' MAXIMUM WHEN ADJACENT TO NON-WALKABLE SURFACE WITH ONE CORNER 3' TO 5' FROM THE BACK OF CURB. THIS ALLOWS THE DETECTABLE WARNING TO BE PLACED ADJACENT TO CURB RAMP WITHOUT RAISED OBSTACLES THAT COULD MISTAKENLY BE TRAVERSED BY A USER WHO IS VISUALLY IMPAIRED.
⑪ RECTANGULAR DETECTABLE WARNINGS MAY BE SETBACK UP TO 3" FROM THE BACK OF CURB WITH CORNERS SET 3" FROM BACK OF CURB. IF 9" SETBACK IS EXCEEDED USE RADIAL DETECTABLE WARNINGS.
⑫ FOR DIRECTIONAL RAMPS WITH THE DETECTABLE WARNINGS PLACED AT THE BACK OF CURB, THE DETECTABLE WARNINGS SHOULD BE SET BACK 2' MAXIMUM WHEN ADJACENT TO WALKABLE SURFACE. THIS ENSURES DETECTABLE EDGE AND HELPS ELIMINATE THE CURB TAPER OBSTRUCTING THE PATH OF PEDESTRIAN TRAVEL.
⑬ THE CONCRETE WALK SHALL BE FORMED AND CONSTRUCTED PERPENDICULAR TO THE BACK OF CURB. MAINTAIN 3" BETWEEN EDGE OF DOMES AND EDGE OF CONCRETE.
⑭ TO BE USED FOR ALL DIRECTIONAL RAMPS, EXCEPT WHERE DOMES ARE PLACED ALONG THE BACK OF CURB.

LEGEND

THESE LONGITUDINAL SLOPE RANGES SHALL BE THE STARTING POINT, IF SITE CONDITIONS WARRANT, LONGITUDINAL SLOPES UP TO 8.33 OR FLATTER ARE ALLOWED.

Ⓘ INDICATES PEDESTRIAN RAMP - SLOPE SHALL BE BETWEEN 5.00 AND LESS THAN 5.01 IN THE DIRECTION SHOWN AND THE CROSS SLOPE SHALL NOT EXCEED 2.00.

Ⓟ INDICATES PEDESTRIAN RAMP - SLOPE SHALL BE GREATER THAN 2.00 AND LESS THAN 5.00 IN THE DIRECTION SHOWN AND CROSS SLOPE SHALL NOT EXCEED 2.00.

LANDING AREA - 4' X 4' MIN. (5' X 5' MIN. PREFERRED) DIMENSIONS AND MAX 2.00 SLOPE IN ALL DIRECTIONS. LANDING SHALL BE FULL WIDTH OF INCOMING PARS.

X" CURB HEIGHT

REVISION:
APPROVED: JANUARY 23, 2017
OPERATIONS ENGINEER

REVISED:
APPROVED: 1-23-2017
STATE DESIGN ENGINEER

PEDESTRIAN CURB RAMP DETAILS	
STANDARD PLAN 5-297.250	2 OF 6

DATE	REVISIONS	BY
3/23/17	ADDED SHEET TO SET	BR

RECORD DRAWING

ROSHELL ENGINEERING, LLC
6192 267 TH CT WYOMING, MN 55092
PHONE: 763.286.0521

COVENANT MEADOWS

DETAILS

RAMSEY, MINNESOTA

I HEREBY CERTIFY THAT THIS PLAN, SPECIFICATION, OR REPORT WAS PREPARED BY ME OR UNDER MY DIRECT SUPERVISION AND THAT I AM A DULY LICENSED PROFESSIONAL ENGINEER UNDER THE LAWS OF THE STATE OF MINNESOTA.

DATE 2/23/17 REG. NO. 24619

BRENT ROSHELL

DRAWN	BR
DATE	12/19/06
SCALE	-
PROJECT	RE-32
CHECKED	BTR
APPROVED	BTR

D2

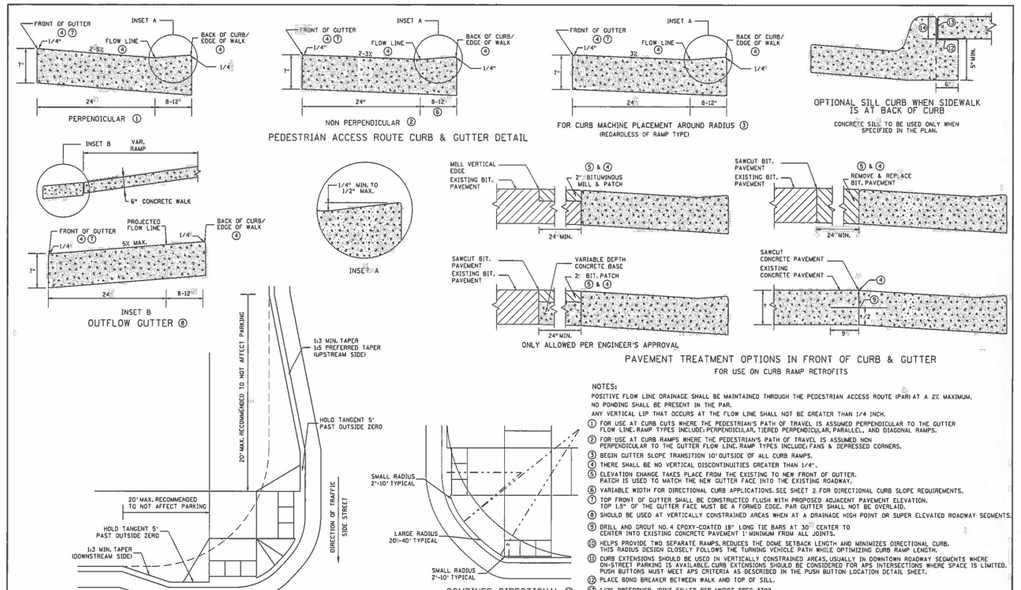

NOTES:

POSITIVE FLOW LINE DRAINAGE SHALL BE MAINTAINED THROUGH THE PEDESTRIAN ACCESS ROUTE (PAR) AT A 2% MAXIMUM.
NO PONDING SHALL BE PRESENT IN THE PAR.
ANY VERTICAL LIP THAT OCCURS AT THE FLOW LINE SHALL NOT BE GREATER THAN 1/4 INCH.

1. FOR USE AT CURB CUTS WHERE THE PEDESTRIAN'S PATH OF TRAVEL IS ASSUMED PERPENDICULAR TO THE GUTTER FLOW LINE. RAMP TYPES INCLUDE: PERPENDICULAR, TIERED PERPENDICULAR, PARALLEL, AND DIAGONAL RAMPS.
2. FOR USE AT CURB RAMPS WHERE THE PEDESTRIAN'S PATH OF TRAVEL IS ASSUMED NON PERPENDICULAR TO THE GUTTER FLOW LINE. RAMP TYPES INCLUDE: FANS & DEPRESSED CORNERS.
3. BEGIN GUTTER SLOPE TRANSITION 10' OUTSIDE OF ALL CURB RAMPS.
4. THERE SHALL BE NO VERTICAL DISCONTINUITIES GREATER THAN 1/4".
5. ELEVATION CHANGE TAKES PLACE FROM THE EXISTING TO NEW FRONT OF GUTTER. PATCH IS USED TO MATCH THE NEW GUTTER FACE INTO THE EXISTING ROADWAY.
6. VARIABLE WIDTH FOR DIRECTIONAL CURB APPLICATIONS. SEE SHEET 2. FOR DIRECTIONAL CURB SLOPE REQUIREMENTS.
7. TOP FRONT OF GUTTER SHALL BE CONSTRUCTED FLUSH WITH PROPOSED ADJACENT PAVEMENT ELEVATION. TOP 1.5" OF THE GUTTER FACE MUST BE A FORMED EDGE. PAR GUTTER SHALL NOT BE OVERLAID.
8. SHOULD BE USED AT VERTICALLY CONSTRAINED AREAS WHEN AT A DRAINAGE HIGH POINT OR SUPER ELEVATED ROADWAY SEGMENTS.
9. DRILL AND GROUT NO. 4 EPOXY-COATED 18" LONG TIE BARS AT 30" CENTER TO CENTER INTO EXISTING CONCRETE PAVEMENT 11" MINIMUM FROM ALL JOINTS.
10. HELPS PROVIDE TWO SEPARATE RAMPS, REDUCES THE DOME SETBACK LENGTH AND MINIMIZES DIRECTIONAL CURB. THIS RADIUS DESIGN CLOSELY FOLLOWS THE TURNING VEHICLE PATH WHILE OPTIMIZING CURB RAMP LENGTH.
11. CURB EXTENSIONS SHOULD BE USED IN VERTICALLY CONSTRAINED AREAS, USUALLY IN DOWNTOWN ROADWAY SEGMENTS WHERE ON-STREET PARKING IS AVAILABLE. CURB EXTENSIONS SHOULD BE CONSIDERED FOR APS INTERSECTIONS WHERE SPACE IS LIMITED. PUSH BUTTONS MUST MEET APS CRITERIA AS DESCRIBED IN THE PUSH BUTTON LOCATION DETAIL SHEET.
12. PLACE BOND BREAKER BETWEEN WALK AND TOP OF SILL.
13. 1/2" PREFORMED JOINT FILLER PER MNDOT SPEC. 3702.
14. DIMENSION TO BE SAME AS SIDEWALK THICKNESS, 4" MIN.

REVISION:
APPROVED: JANUARY 23, 2017
OPERATIONS ENGINEER

APPROVED: 1-23-2017
STATE DESIGN ENGINEER

PEDESTRIAN CURB RAMP DETAILS
STANDARD PLAN 5-297.250 | 3 OF 6

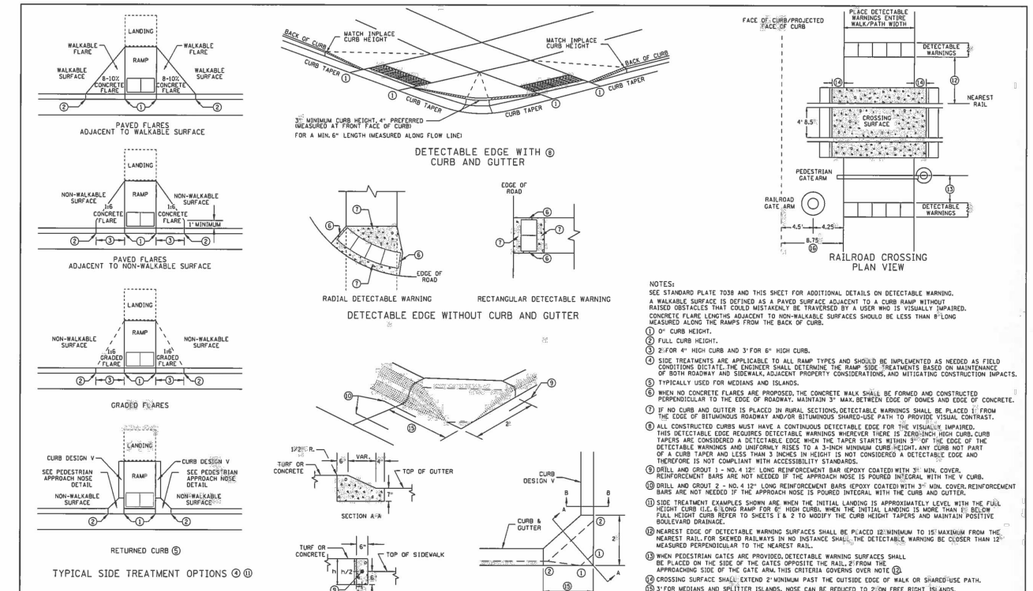

NOTES:
SEE STANDARD PLATE 7038 AND THIS SHEET FOR ADDITIONAL DETAILS ON DETECTABLE WARNING.
A WALKABLE SURFACE IS DEFINED AS A PAVED SURFACE ADJACENT TO A CURB RAMP WITHOUT RAISED OBSTACLES THAT COULD MISTAKENLY BE TRAVERSED BY A USER WHO IS VISUALLY IMPAIRED.
CONCRETE FLARE LENGTHS ADJACENT TO NON-WALKABLE SURFACES SHOULD BE LESS THAN 8" LONG MEASURED ALONG THE RAMP'S FROM THE BACK OF CURB.

1. 0" CURB HEIGHT.
2. FULL CURB HEIGHT.
3. 2" FOR 4" HIGH CURB AND 3" FOR 6" HIGH CURB.
4. SIDE TREATMENTS ARE APPLICABLE TO ALL RAMP TYPES AND SHOULD BE IMPLEMENTED AS NEEDED AS FIELD CONDITIONS DICTATE. DESIGNERS SHOULD DETERMINE THE RAMP SIDE TREATMENTS BASED ON MAINTENANCE OF BOTH ROADWAY AND SIDEWALK, ADJACENT PROPERTY CONSIDERATIONS, AND MITIGATING CONSTRUCTION IMPACTS.
5. TYPICALLY USED FOR MEDIANS AND ISLANDS.
6. WHEN NO CONCRETE FLARES ARE PROPOSED, THE CONCRETE WALK SHALL BE FORMED AND CONSTRUCTED PERPENDICULAR TO THE EDGE OF ROADWAY. MAINTAIN 3' MAX. BETWEEN EDGE OF DOMES AND EDGE OF CONCRETE.
7. IF NO CURB AND GUTTER IS PLACED IN RURAL SECTIONS, DETECTABLE WARNINGS SHALL BE PLACED 1' FROM THE EDGE OF BITUMINOUS ROADWAY AND/OR BITUMINOUS SHARED-USE PATH TO PROVIDE VISUAL CONTRAST.
8. ALL CONSTRUCTED CURBS MUST HAVE A CONTINUOUS DETECTABLE EDGE FOR THE VISUALLY IMPAIRED. THIS DETECTABLE EDGE REQUIRES DETECTABLE WARNINGS WHEREVER THERE IS ZERO-INCH HIGH CURB. CURB TAPERS ARE CONSIDERED A DETECTABLE EDGE WHEN THE TAPER STARTS WITHIN 3" OF THE EDGE OF THE DETECTABLE WARNINGS AND UNIFORMLY RISES TO A 3-INCH MINIMUM CURB HEIGHT. ANY CURB NOT PART OF A CURB TAPER AND LESS THAN 3 INCHES IN HEIGHT IS NOT CONSIDERED A DETECTABLE EDGE AND THEREFORE IS NOT COMPLIANT WITH ACCESSIBILITY STANDARDS.
9. DRILL AND GROUT 1 - NO. 4 12" LONG REINFORCEMENT BAR (EPOXY COATED) WITH 3" MIN. COVER. REINFORCEMENT BARS ARE NOT NEEDED IF THE APPROACH NOSE IS POURED INTEGRAL WITH THE V CURB.
10. DRILL AND GROUT 2 - NO. 4 12" LONG REINFORCEMENT BARS (EPOXY COATED) WITH 3" MIN. COVER. REINFORCEMENT BARS ARE NOT NEEDED IF THE APPROACH IS POURED INTEGRAL WITH THE CURB AND GUTTER.
11. SIDE TREATMENT EXAMPLES SHOWN ARE WHEN THE INITIAL LANDING IS APPROXIMATELY LEVEL WITH THE FULL HEIGHT CURB (I.E. A LONG RAMP FOR 6" HIGH CURB). WHEN THE INITIAL LANDING IS MORE THAN 1' BELOW FULL HEIGHT CURB REFER TO SHEETS 1 & 2 TO MODIFY THE CURB HEIGHT TAPERS AND MAINTAIN POSITIVE BOULEVARD DRAINAGE.
12. NEAREST EDGE OF DETECTABLE WARNING SURFACES SHALL BE PLACED 12" MINIMUM TO 15" MAXIMUM FROM THE NEAREST RAIL. FOR SKEWED RAILWAYS IN NO INSTANCE SHALL THE DETECTABLE WARNING BE CLOSER THAN 12" MEASURED PERPENDICULAR TO THE NEAREST RAIL.
13. WHEN PEDESTRIAN GATES ARE PROVIDED, DETECTABLE WARNING SURFACES SHALL BE PLACED ON THE SIDE OF THE GATES OPPOSITE THE RAIL, 2' FROM THE APPROACHING SIDE OF THE GATE ARM. THIS CRITERIA GOVERNS OVER NOTE 12.
14. CROSSING SURFACE SHALL EXTEND 2' MINIMUM PAST THE OUTSIDE EDGE OF WALK OR SHARED-USE PATH.
15. 3' FOR MEDIANS AND SPLITTER ISLANDS. NOSE CAN BE REDUCED TO 2' ON FREE RIGHT ISLANDS.
16. SIDEWALK TO BE PLACED 8.75' MIN. FROM THE FACE OF CURB/PROJECTED FACE OF CURB. THIS ENSURES MIN. CLEARANCE BETWEEN THE SIDEWALK AND GATE ARM COUNTERWEIGHT SUPPORTS.

REVISION:
APPROVED: JANUARY 23, 2017
OPERATIONS ENGINEER

APPROVED: 1-23-2017
STATE DESIGN ENGINEER

PEDESTRIAN CURB RAMP DETAILS
STANDARD PLAN 5-297.250 | 4 OF 6

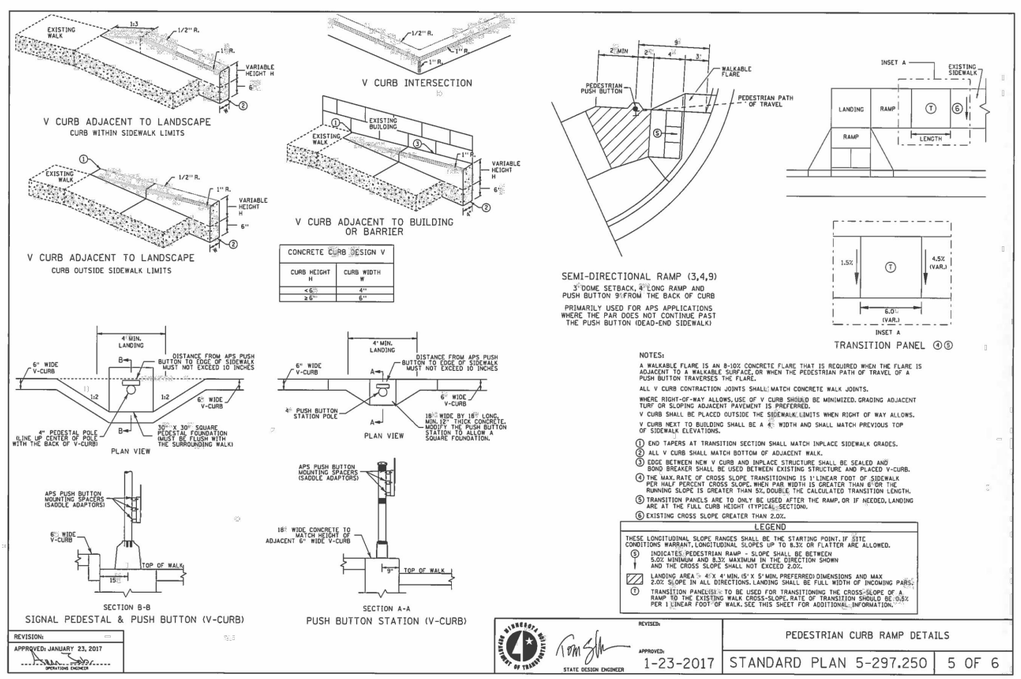

CONCRETE CURB DESIGN V	
CURB HEIGHT H	CURB WIDTH W
< 6"	4"
≥ 6"	6"

NOTES:

A WALKABLE FLARE IS AN 8-10% CONCRETE FLARE THAT IS REQUIRED WHEN THE FLARE IS ADJACENT TO A WALKABLE SURFACE, OR WHEN THE PEDESTRIAN PATH OF TRAVEL OF A PUSH BUTTON TRAVERSES THE FLARE.

ALL V CURB CONTRACTION JOINTS SHALL MATCH CONCRETE WALK JOINTS.

WHERE RIGHT-OF-WAY ALLOWS, USE OF V CURB SHOULD BE MINIMIZED. GRADING ADJACENT TURF OR SLOPING ADJACENT PAVEMENT IS PREFERRED.

V CURB SHALL BE PLACED OUTSIDE THE SIDEWALK LIMITS WHEN RIGHT OF WAY ALLOWS.

V CURB NEXT TO BUILDING SHALL BE A 4' WIDTH AND SHALL MATCH PREVIOUS TOP OF SIDEWALK ELEVATIONS.

1. END TAPERS AT TRANSITION SECTION SHALL MATCH INPLACE SIDEWALK GRADES.
2. ALL V CURB SHALL MATCH BOTTOM OF ADJACENT WALK.
3. EDGE BETWEEN NEW V CURB AND INPLACE STRUCTURE SHALL BE SEALED AND BOND BREAKER SHALL BE USED BETWEEN EXISTING STRUCTURE AND PLACED V-CURB.
4. THE MAX. RATE OF CROSS SLOPE TRANSITIONING IS 1' LINEAR FOOT OF SIDEWALK PER HALF PERCENT CROSS SLOPE, WHEN PAR WIDTH IS GREATER THAN 6' OR THE RUNNING SLOPE IS GREATER THAN 5%, DOUBLE THE CALCULATED TRANSITION LENGTH.
5. TRANSITION PANELS ARE TO ONLY BE USED AFTER THE RAMP, OR IF NEEDED, LANDING ARE AT THE FULL CURB HEIGHT (TYPICAL SECTION).
6. EXISTING CROSS SLOPE GREATER THAN 2.0%.

LEGEND

THESE LONGITUDINAL SLOPE RANGES SHALL BE THE STARTING POINT, IF SITE CONDITIONS WARRANT, LONGITUDINAL SLOPES UP TO 8.3% OR FLATTER ARE ALLOWED.

- INDICATES PEDESTRIAN RAMP - SLOPE SHALL BE BETWEEN 5.0% MINIMUM AND 8.3% MAXIMUM IN THE DIRECTION SHOWN AND THE CROSS SLOPE SHALL NOT EXCEED 2.0%.
- LANDING AREA - 4'X 4' MIN. (5'X 5' MIN. PREFERRED) DIMENSIONS AND MAX 2.0% SLOPE IN ALL DIRECTIONS. LANDING SHALL BE FULL WIDTH OF INCOMING PATH.
- TRANSITION PANELS - TO BE USED FOR TRANSITIONING THE CROSS-SLOPE OF A RAMP TO THE EXISTING WALK CROSS-SLOPE. RATE OF TRANSITION SHOULD BE 0.5% PER 1 LINEAR FOOT OF WALK. SEE THIS SHEET FOR ADDITIONAL INFORMATION.

REVISION:
APPROVED: JANUARY 23, 2017
OPERATIONS ENGINEER

APPROVED: 1-23-2017
STATE DESIGN ENGINEER

PEDESTRIAN CURB RAMP DETAILS
STANDARD PLAN 5-297.250 | 5 OF 6

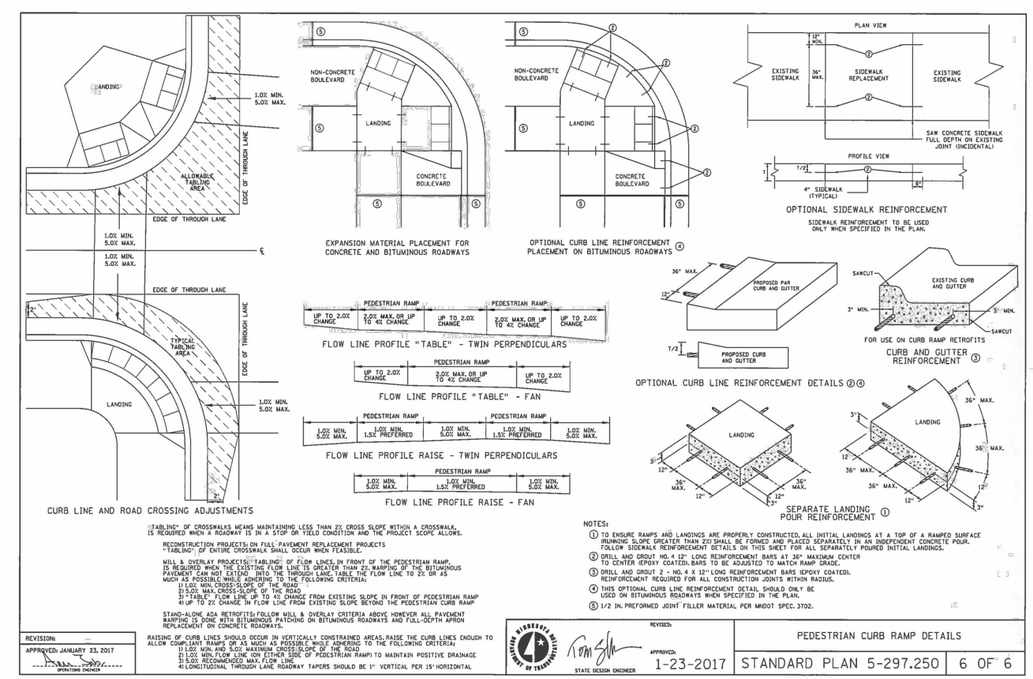

"TABLING" OF CROSSWALKS MEANS MAINTAINING LESS THAN 2% CROSS SLOPE WITHIN A CROSSWALK, IS REQUIRED WHEN A ROADWAY IS IN A STOP OR YIELD CONDITION AND THE PROJECT SCOPE ALLOWS.

RECONSTRUCTION PROJECTS ON FULL-PAVEMENT REPLACEMENT PROJECTS
"TABLING" OF ENTIRE CROSSWALK SHALL OCCUR WHEN FEASIBLE.

MILL & OVERLAY PROJECTS: "TABLING" OF FLOW LINES IN FRONT OF THE PEDESTRIAN RAMP, IS REQUIRED WHEN THE EXISTING FLOW LINE TO GREATER THAN 2% WARPING OF THE BITUMINOUS PAVEMENT CAN NOT EXTEND INTO THE THROUGH LANE. TABLE THE FLOW LINE TO 2% OR AS MUCH AS POSSIBLE WHILE ADHERING TO THE FOLLOWING CRITERIA:
1) 1.0% MIN. CROSS-SLOPE OF THE ROAD
2) 5.0% MAX. CROSS-SLOPE OF THE ROAD
3) "TABLE" FLOW LINE UP TO 4% CHANGE FROM EXISTING SLOPE IN FRONT OF PEDESTRIAN RAMP
4) UP TO 2% CHANGE IN FLOW LINE FROM EXISTING SLOPE BEYOND THE PEDESTRIAN CURB RAMP

STAND-ALONE ADA RETROFITS: FOLLOW MILL & OVERLAY CRITERIA ABOVE HOWEVER ALL PAVEMENT WARPING IS DONE WITH BITUMINOUS PATCHING ON BITUMINOUS ROADWAYS AND FULL-DEPTH APRON REPLACEMENT ON CONCRETE ROADWAYS.

RAISING OF CURB LINES SHOULD OCCUR IN VERTICALLY CONSTRAINED AREAS. RAISE THE CURB LINES ENOUGH TO ALLOW COMPLIANT RAMPS OR AS MUCH AS POSSIBLE WHILE ADHERING TO THE FOLLOWING CRITERIA:
1) 1.0% MIN. AND 5.0% MAXIMUM CROSS-SLOPE OF THE ROAD
2) 1.0% MIN. FLOW LINE ION EITHER SIDE OF PEDESTRIAN RAMP TO MAINTAIN POSITIVE DRAINAGE
3) 5.0% RECOMMENDED MAX. FLOW LINE
4) LONGITUDINAL THROUGH LANE ROADWAY TAPERS SHOULD BE 1" VERTICAL PER 15' HORIZONTAL

NOTES:

1. TO ENSURE RAMPS AND LANDINGS ARE PROPERLY CONSTRUCTED, ALL INITIAL LANDINGS AT A TOP OF A RAMPED SURFACE RUNNING SLOPE GREATER THAN 2.0% SHALL BE FORMED AND PLACED SEPARATELY IN AN INDEPENDENT CONCRETE POUR. FOLLOW SIDEWALK REINFORCEMENT DETAILS ON THIS SHEET FOR ALL SEPARATELY POURED INITIAL LANDINGS.
2. DRILL AND GROUT NO. 4 12" LONG REINFORCEMENT BARS AT 36" MAXIMUM CENTER TO CENTER (EPOXY COATED) BARS TO BE ADJUSTED TO MATCH RAMP GRADE.
3. DRILL AND GROUT 2 - NO. 4 X 12" LONG REINFORCEMENT BARS (EPOXY COATED). REINFORCEMENT REQUIRED FOR ALL CONSTRUCTION JOINTS WITHIN RADIUS.
4. THIS OPTIONAL CURB LINE REINFORCEMENT DETAIL SHOULD ONLY BE USED ON BITUMINOUS ROADWAYS WHEN SPECIFIED IN THE PLAN.
5. 1/2 IN. PREFORMED JOINT FILLER MATERIAL PER MNDOT SPEC. 3702.

REVISION:
APPROVED: JANUARY 23, 2017
OPERATIONS ENGINEER

APPROVED: 1-23-2017
STATE DESIGN ENGINEER

PEDESTRIAN CURB RAMP DETAILS
STANDARD PLAN 5-297.250 | 6 OF 6

DATE	REVISIONS	BY
3/23/17	ADDED SHEET TO SET	BR

RECORD DRAWING

ROSHELL ENGINEERING, LLC
6192 267 TH CT WYOMING, MN 55092
PHONE: 763.286.0521

COVENANT MEADOWS
DETAILS
RAMSEY, MINNESOTA

I HEREBY CERTIFY THAT THIS PLAN, SPECIFICATION, OR REPORT WAS PREPARED BY ME OR UNDER MY DIRECT SUPERVISION AND THAT I AM A DULY LICENSED PROFESSIONAL ENGINEER UNDER THE LAWS OF THE STATE OF MINNESOTA.

DATE 2/2/17 REG. NO. 24018
BRENT ROSHELL

DRAWN	BR
DATE	12/19/16
SCALE	-
PROJECT	RE-32
CHECKED	BTR
APPROVED	BTR

D3

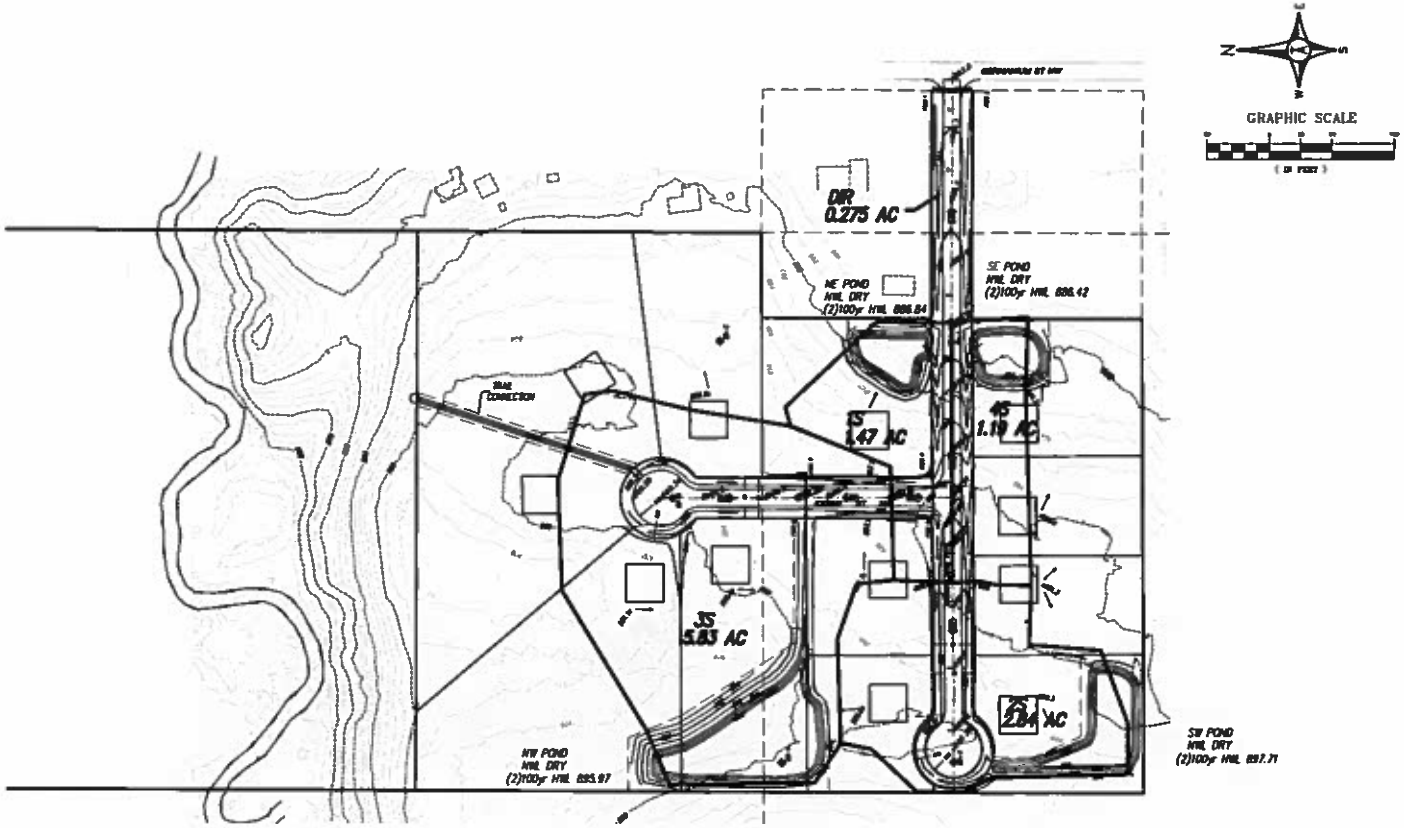
GRAPHIC SCALE
DIR
0.275 AC
NE POND
NWL DRY
(2)100yr HWL 886.84
SE POND
NWL DRY
(2)100yr HWL 886.42
TRAIL
CONNECTION
JS
5.83 AC
NW POND
NWL DRY
(2)100yr HWL 885.97
SW POND
NWL DRY
(2)100yr HWL 887.71

GRAPHIC SCALE

60 0 30 60 120

(IN FEET)

BUILDING PAD LEGEND

909.0	GARAGE FLOOR ELEVATION
FWO/MWO/SWO FLO/MLO/F	TYPE OF BUILDING
901.5	LOWEST FLOOR ELEVATION
909.0	LOWEST OPENING ELEVATION

BUILDING TYPE LEGEND

F	FULL BASEMENT
FWO	FULL BASEMENT WALKOUT
MWO	MODIFIED (NON STANDARD) WALKOUT BASEMENT VARIABLE 5 –12 COURSE BASEMENT
SWO	SPLIT ENTRY WALKOUT BASEMENT (5 COURSE)
FLO	FULL BASEMENT LOOKOUT ON 5 COURSE
MLO	MODIFIED (NON STANDARD) LOOKOUT BASEMENT VARIABLE 5 –12 COURSE BASEMENT

LINE TYPE & SYMBOL LEGEND

- FLARED END SECTION
- STORM SEWER
- SB-5 DENOTES SOIL BORING
- P S DRAIN FIELD LOC P = PRIMARY S = SECONDARY
- W PROPOSED WELL LOC.
- EXIST TREE LINE
- TF TREE FENCE
- SF SILT FENCE
- PROPOSED CONTOUR
- EXIST CONTOUR
- SETBACK
- EASEMENT
- LOT LINE
- R/W
- EDGE OF BITUMINOUS
- CENTERLINE

TREE PROTECTION FENCE SHALL BE INSTALLED AND THE LOCATION APPROVED BY THE CITY BEFORE COMMENCEMENT OF OTHER WORK, INCLUDING SILT FENCE INSTALLATION.

AN ARBORIST SHALL BE CONSULTED TO DEVELOP A PLAN TO PROTECT EXISTING OAK TREES FROM OAK WILT.

ANY CLEARING OF OAK TREES SHALL BE PERFORMED PRIOR TO APRIL 15TH OR AFTER JULY 15TH TO MINIMIZE EXPOSURE OR INTRODUCTION OF OAK WILT.

POND NOTES

INFILTRATION PONDS SHALL BE EXCAVATED BY USE OF BACKHOE WITH A TOOTHED BUCKET.

NE POND AND SE POND WILL REQUIRE OVER–EXCAVATION TO REMOVE A CLAY LAYER OF 4 FEET IN THICKNESS

BOTTOM OF POND SHALL NOT BE COMPACTED

NO TOPSOIL TO BE PLACED IN PONDS

PONDS TO BE SEED WITH MnDOT SEED MIX 33–262 (44 lb/ac)

PLACE SILT FENCE (SECONDARY) IMMEDIATELY AFTER GRADING COMPLETION. THIS FENCING TO REMAIN IN PLACE UNTIL VEGETATION IS ESTABLISHED IN THE PONDS.

ACCESS TO PONDS VIA EASEMENTS ABUTTING PUBLIC ROADS

NE POND AND SE POND SHALL BE EXCAVATED DOWN TO THE EXISTING SAND LAYER. ON SITE SANDS TO BE PLACED IN LOOSE LIFTS OF 12 INCHES TO BRING POND BOTTOM UP TO GRADE. NO COMPACTION OF SOILS SHALL OCCUR.

NOTE: STREETS TO BE SWEPT DAILY OR AS DIRECTED BY THE CITY ENGINEER.

NOTE: NO ACTIVITY, OTHER THAN THE CONSTRUCTION OF, SHALL BE ALLOWED IN INFILTRATION POND AREAS.

NOTE: TREES TO REMAIN SHALL BE PROTECTED FROM CONSTRUCTION ACTIVITY BY MEANS OF FENCING OR OTHER APPROVED METHOD. TREE FENCING TO BE PLACED BY HAND AND PRIOR TO SILT FENCE PLACEMENT.

NOTE: BUILDING PADS & DRAINFIELD SITE FOR GRAPHICAL PURPOSES ONLY. ACTUAL LOCATION MAY VARY.

NOTE: DRAINFIELD LOCATIONS, WHEN DETERMINED, ARE TO BE PROTECTED FROM CONSTRUCTION ACTIVITIES.

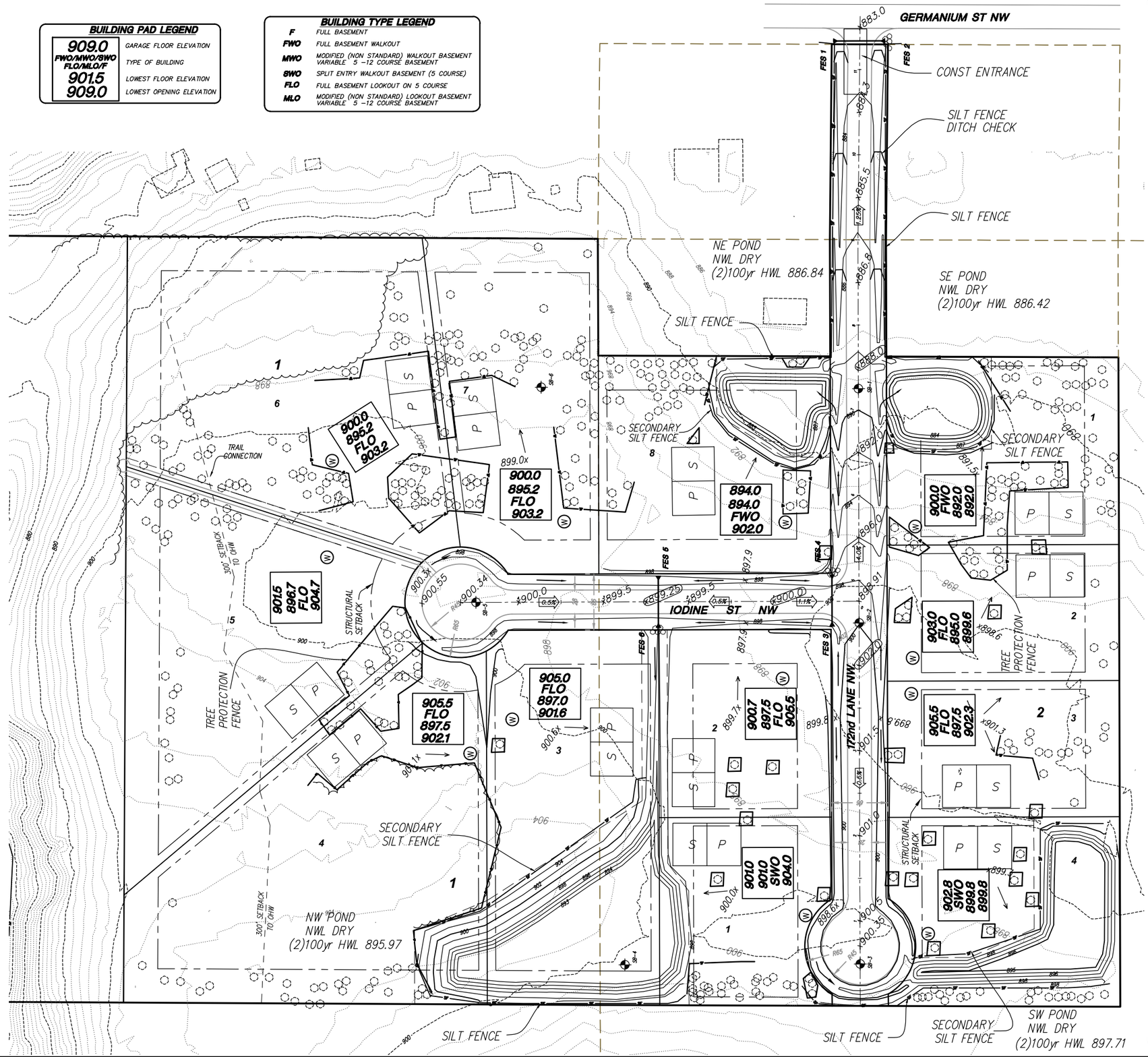

DATE	REVISIONS	BY
3/23/17	DOUBLE 100 YR PONDS, TREE FENCE	BR
	RECORD DRAWING	

ROSHELL ENGINEERING, LLC
6192 267 TH CT WYOMING, MN 55092
PHONE: 763.286.0521

COVENANT MEADOWS

PRELIMINARY GRADING PLAN

RAMSEY, MINNESOTA

I HEREBY CERTIFY THAT THIS PLAN, SPECIFICATION, OR REPORT WAS PREPARED BY ME OR UNDER MY DIRECT SUPERVISION AND THAT I AM A DULY LICENSED PROFESSIONAL ENGINEER UNDER THE LAWS OF THE STATE OF MINNESOTA.

DATE 3/23/17 REG. NO. 24019

Brent Roshell

BRENT ROSHELL

DRAWN	BR
DATE	12/19/16
SCALE	AS SHOWN
PROJECT	RE–32
CHECKED	BTR
APPROVED	BTR

G1

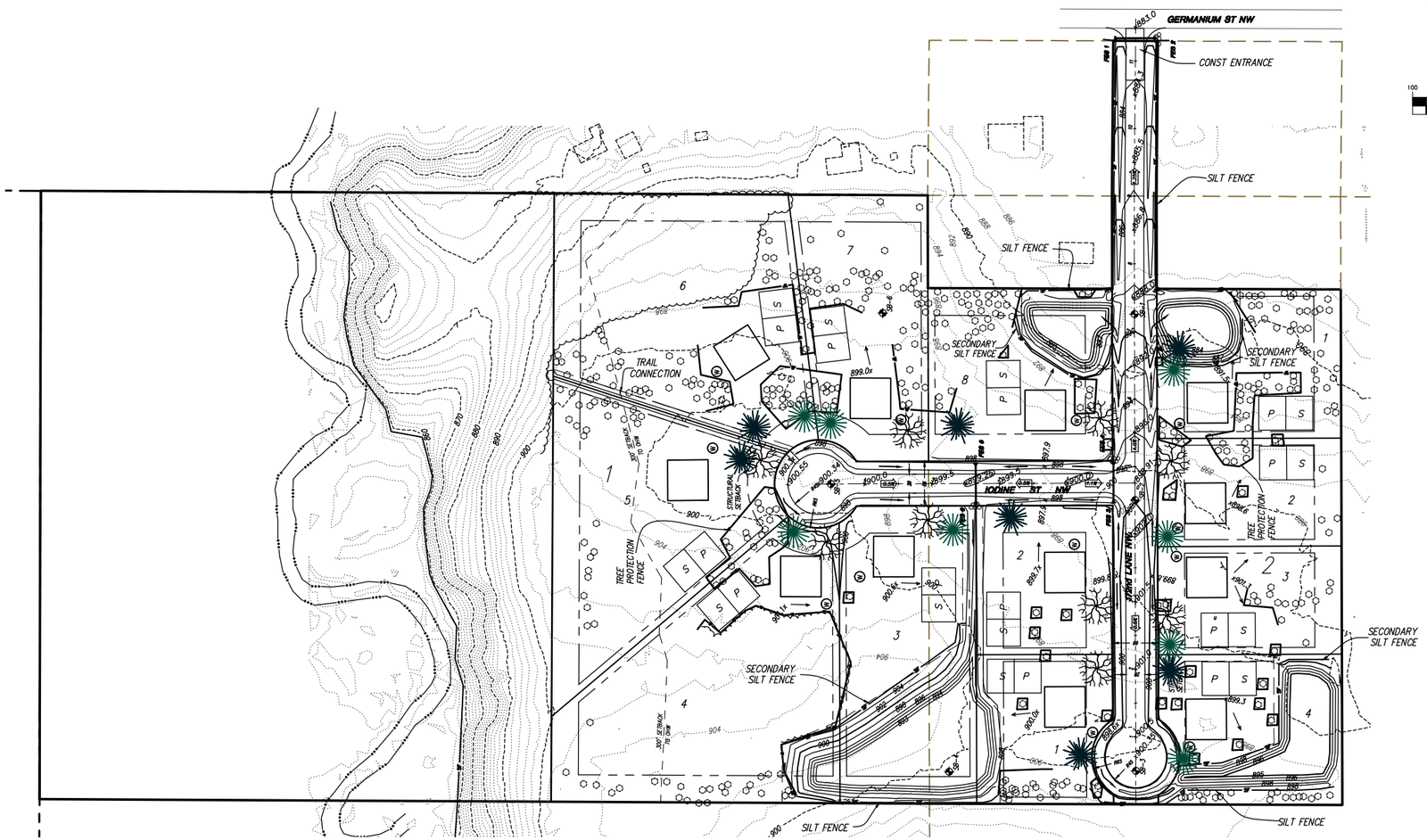

GRAPHIC SCALE

100 0 50 100 200

(IN FEET)

LINE TYPE & SYMBOL LEGEND

- FLARED END SECTION
- STORM SEWER
- SB-5 — DENOTES SOIL BORING
- P / S — DRAIN FIELD LOC P = PRIMARY S = SECONDARY
- W — PROPOSED WELL LOC.
- EXIST TREE LINE
- TF — TREE FENCE
- SF — SILT FENCE
- PROPOSED CONTOUR
- EXIST CONTOUR
- SETBACK
- EASEMENT
- LOT LINE
- R/W
- EDGE OF BITUMINOUS
- CENTERLINE

TREE PROTECTION FENCE SHALL BE INSTALLED AND THE LOCATION APPROVED BY THE CITY BEFORE COMMENCEMENT OF OTHER WORK, INCLUDING SILT FENCE INSTALLATION.

AN ARBORIST SHALL BE CONSULTED TO DEVELOP A PLAN TO PROTECT EXISTING OAK TREES FROM OAK WILT.

ANY CLEARING OF OAK TREES SHALL BE PERFORMED PRIOR TO APRIL 15TH OR AFTER JULY 15TH TO MINIMIZE EXPOSURE OR INTRODUCTION OF OAK WILT.

PLANTING DEPTH SHALL BE SUCH THAT THE 1ST STE OF PRIMARY ROOTS IS AT FINISHED GRADE

ONLY PRUNE OUT DEAD/BROKEN/DEFORMED BRANCHES AT TIME OF INSTALLATION.

REMOVAL OF UPPER PORTION OF WIRE BASKET AND BURLAP AFTER BEING PLACED IN PLANTING HOLE IF USING B&B STOCK.

2–4 INCHES OF WOOD CHIP MULCH SHALL BE INCLUDED AROUND ALL TREES. MULCH SHALL NOT BE PILED AGAINST THE TRUNK OF TREES.

TOPSOIL: EACH INDIVIDUAL LOT WILL NEED TO HAVE FOUR (4) INCHES OF TOPSOIL MEETING THE CITY'S TOPSOIL SPECIFICATION. A TOPSOIL INSPECTION IS REQUIRED PRIOR TO LANDSCAPING BEING INSTALLED AND COPIES OF THE LOAD TICKETS ARE REQUIRED AS WELL. THIS IS REVIEWED AT TIME OF BUILDING PERMIT APPLICATION AND REQUEST FOR CERTIFICATE OF OCCUPANCY FOR EACH INDIVIDUAL LOT.

PLANTING REQUIREMENTS

TREES:
OVERSTORY DECIDUOUS TREES 1" DIAMETER MEASURED 6' FROM THE BASE AT PLANTING

CONIFEROUS TREES MUST HAVE A MINMUM HEIGHT OF 6 FEET

– MINIMUM 25% DECIDUOUS AND CONIFEROUS

THE PLANTING DEPTH OF EACH TREE WILL BE INSPECTED. ANY TREE PLANTED TOO DEEPLY OR WITH 1ST PRIMARY ROOTS BURIED WILL BE REJECTED.

1. ALL TREES TO BE PREMIUM QUALITY, NO "PARK GRADE" TREES ARE PERMITTED.
2. AFTER INSTALLATION, TRIM OUT DEADWOOD AND/OR DEFORMED TWIGS. DO NOT CUT LEADER.
3. AMENDED SOIL SHALL CONTAIN 5% ORGANIC MATTER BY VOLUME.
4. DIAMETER OF HOLE SHALL BE 1–2' LARGER THAN THE DIAMETER OF THE ROOTBALL OR ROOT MASS.
5. ORGANIC MATTER SHALL NOT BE BANKED AGAINST THE STEM OR TRUNK OF THE TREE.
6. TREE SHALL NOT BE STAKED UNLESS IT IS ABSOLUTELY NECESSARY TO DO SO.
7. ALL TAGS, BANDS, AND WIRES SHALL BE REMOVED FROM THE TREE IMMEDIATELY AFTER PLANTING.
8. THE TREE SHALL BE WATERED AS NECESSARY TO PREVENT WILTING AND PROMOTE GROWTH.
9. A PHOTO DEGRADEABLE TREE TUBE OR EQUIVALENT SHALL BE INSTALLED AROUND ALL NEWLY PLANTED TREES.
10. PULL BURLAP AWAY FROM TREE STEM.
11. STAKES AND GUY WIRES MANDATORY ONLY FOR B&B TREES WITH 4" CALIPER OR GREATER, ALL WIND PRONE SITES AND ALL BARE ROOT TREES.
12. COORDINATE STAKING TO INSURE UNIFORM ORIENTATION OF GUY WIRES AND STAKES, IF NECESSARY.
13. REMOVE SOIL FROM TOP OF ROOT BALL TO EXPOSE TOP OF 1ST SET OF PRIMARY ROOTS. 1ST SET OF PRIMARY ROOTS ARE AT FINISHED GRADE.
14. AFTER SETTING ROOT BALL IN PIT, BACKFILL TO WITHIN 12" OF TOP OF ROOT BALL, AND WATER IN. CUT AND REMOVE TO BACKFILL LINE ALL TWINE AND/OR BURLAP. BACK FILL UNTILL PIT IS FULL, WATER AGAIN. PULL EXCESSIVE SOIL OFF THE TOP OF BRANCH ROOT SYSTEM. IF SOIL IN ROOT BALL IS THE CONSISTENCY OF OATMEAL DUE TO EXCESSIVE HANDLING, CONTRACTOR SHALL STAKE THE TREE.
15. SHREDDED HARDWOOD MULCH – 1–4" DEPTH, 5' DIAMETER. PULL AWAY FROM TRUNK OF TREE.
16. BACKFILL WITH 1/2 NATIVE SOILS AND 1/2 PLANTING SOIL. MIX THOROUGHLY. SEE SPEC.
17. GUY ASSEMBLY: 16" POLYPROPYLENE OR POLYETHYENE(40 MIL) 1 1/2 WIDE STRIP– (TYP) DOUBLE STRAND 14 GA WIRE & 3 STEEL STAKES OR SIGN POSTS@ 120 DEGREE O.C..
18. GUY ASSEMBLY OPTIONAL BUT CONTRACTOR ASSUMES FULL RESPONSIBILITY FOR MAINTAINING TREE IN A PLUMB POSITION FOR THE DURATION OF THE GUARANTEE PERIOD.

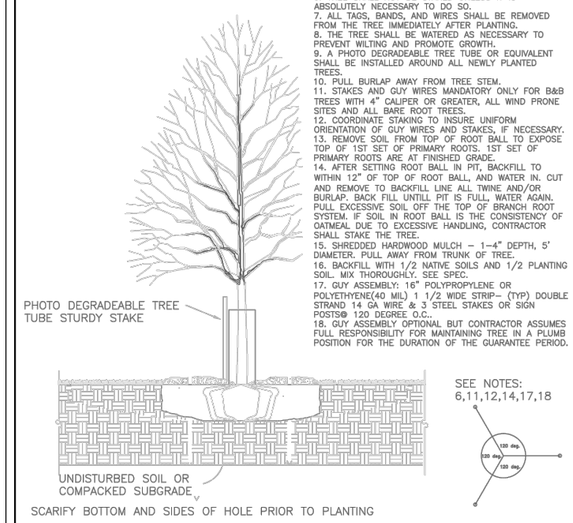

APPROVED: 5 – 1997	City of RAMSEY	STANDARD DETAILS: TREE PLANTING
		CITY PLATE No. PARK–2

PROPOSED CONIFEROUS TREES /QTY

DENOTES BLACK HILLS SPRUCE (PICEA GLAUCA DENSATA) — *7 EACH*

PROPOSED DECIDUOUS TREES /QTY

DENOTES WHITE OAK (QUERCUS ALBA) — *9 EACH*

DENOTES AUTUMN BLAZE MAPLE (ACER FREEMANII) — *8 EACH*

DATE	REVISIONS	BY
3/23/17	TREE FENCE	BR

RECORD DRAWING

ROSHELL ENGINEERING, LLC
6192 267 TH CT WYOMING, MN 55092
PHONE: 763.286.0521

COVENANT MEADOWS

TREE / LANDSCAPE PLAN

RAMSEY, MINNESOTA

I HEREBY CERTIFY THAT THIS PLAN, SPECIFICATION, OR REPORT WAS PREPARED BY ME OR UNDER MY DIRECT SUPERVISION AND THAT I AM A DULY LICENSED PROFESSIONAL ENGINEER UNDER THE LAWS OF THE STATE OF MINNESOTA.

DATE 3/23/17 REG. NO. 24019

BRENT ROSHELL

DRAWN	BR
DATE	2/2/17
SCALE	AS SHOWN
PROJECT	RE–32
CHECKED	BTR
APPROVED	BTR

L1

STORMWATER POLLUTION PREVENTION PLAN (SWPPP) NARRATIVE

PROJECT SITE EVALUATION, ASSESSMENT, AND PLANNING

THIS NARRATIVE IS TO SERVE AS A GUIDANCE PLAN AND MUST BE AMENDED AND MODIFIED AS SITE CONDITIONS CHANGE DURING CONSTRUCTION.

PROJECT LOCATION/DESCRIPTION

PROJECT/SITE NAME: COVENANT MEADOWS
PROJECT NUMBERS: RE-33
PROJECT LOCATION: STREET: 173rd & GERMANIUM CITY/TOWNSHIP: RAMSEY COUNTY: ANOKA
STATE: MINNESOTA ZIP: 55303
LATITUDE/LONGITUDE: 45.2845/-93.4102 SECTION: 2 TOWNSHIP: 32N RANGE: 25W

CONTACT INFORMATION/RESPONSIBLE PARTIES

ERIC THOMSEN OWNS THE LAND, ADJACENT ROADS, AND EASEMENT AREAS ASSOCIATED WITH THE PROJECT. ERIC THOMSEN IS THE OWNER PERMITTEE APPLYING FOR PERMIT COVERAGE AND WILL BE RESPONSIBLE FOR DEVELOPING THIS SWPPP AND THE LONG-TERM MAINTENANCE PLAN OF THE PERMANENT STORMWATER MANAGEMENT SYSTEM FOR THIS PROJECT (IF APPLICABLE). THE OWNER WILL ENSURE THAT THE DESCRIBED WORK IN THE SWPPP IS BEING COMPLETED BY THE OPERATOR PERMITTEE.

OWNER/PERMITTEE: ERIC THOMSEN
6210 GREEN VALLEY RD
RAMSEY, MN 55303
612-919-6862

THE PRIMARY CONTRACTOR WILL ENTER INTO A CONTRACT WITH ERIC THOMSEN TO COMPLETE THE REQUIRED WORK FOR THIS PROJECT. THE PRIMARY CONTRACTOR WILL BECOME (UNDER CONTRACT) THE OPERATOR CO-PERMITTEE ON THE NPDES PERMIT (THROUGH EXECUTION OF A NPDES PERMIT MODIFICATION FORM), AND THEREBY AGREE TO IMPLEMENT THIS SWPPP IN COOPERATION WITH THE OWNER. THE OPERATOR IS RESPONSIBLE FOR DEVELOPING A CHAIN OF RESPONSIBILITY PRIOR TO STARTING CONSTRUCTION (REFER TO SWPPP AMENDMENT SECTION). THE NPDES PERMIT MODIFICATION FORM SHALL BE SUBMITTED TO THE MPCA AFTER THE PROJECT IS AWARDED TO THE PRIMARY CONTRACTOR, PRIOR TO LETTING THE PROJECT.

THE OPERATOR WILL INSURE THAT INDIVIDUALS OVERSEEING OR IMPLEMENTING THE SWPPP HAVE BEEN PROPERLY TRAINED AND THAT CERTIFICATIONS WILL BE MADE AVAILABLE UPON REQUEST. THIS INCLUDES ANY SUB-CONTRACTORS THAT THE OPERATOR EMPLOYS UNDER SEPARATE CONTRACT. THE OPERATOR WILL PROVIDE THE CONTACT INFORMATION FOR THE EROSION CONTROL SUPERVISOR, SITE SUPERINTENDENT/FOREMAN, AND BMP INSTALLERS. THE EROSION CONTROL SUPERVISOR SHALL BE A RESPONSIBLE EMPLOYEE OF THE PRIME CONTRACTOR AND/OR DULY AUTHORIZED BY THE PRIME CONTRACTOR TO REPRESENT THE PRIME CONTRACTOR ON ALL MATTERS PERTAINING TO THE NPDES CONSTRUCTION STORMWATER PERMIT COMPLIANCE. THE EROSION CONTROL SUPERVISOR SHALL HAVE AUTHORITY OVER ALL OPERATOR OPERATIONS WHICH INFLUENCE NPDES PERMIT COMPLIANCE, INCLUDING GRADING, EXCAVATION, BRIDGE CONSTRUCTION, CULVERT INSTALLATION, UTILITY WORK, CLEARING/GRUBBING, DEWATERING, AND ANY OTHER OPERATION THAT INCREASES THE EROSION POTENTIAL ON THE PROJECT.

THE OPERATOR WILL PERFORM A PRECONSTRUCTION SITE VISIT TO ADDRESS ANY AREAS OF CONCERN PERTAINING TO ENVIRONMENTAL COMPLIANCE. THE OPERATOR WILL IMPLEMENT AND MAINTAIN BMPS FOR THE DURATION OF CONSTRUCTION PROJECT. THE OPERATOR WILL COMPLETE THE REQUIRED SITE INSPECTIONS TO REMAIN IN COMPLIANCE WITH NPDES PERMIT REQUIREMENTS PART II.B, II.C, III.B-F, IV, V, AND APPLICABLE CONSTRUCTION ACTIVITY REQUIREMENTS FOUND IN APPENDIX A, PART C.

OPERATOR/PERMITTEE: (TO BE DETERMINED THROUGH TRANSFER OF NPDES-CSW PERMIT)

ROSHELL ENGINEERING, LLC HAS BEEN CONTRACTED BY THE OWNER TO DEVELOP THE SWPPP PLAN FOR THIS PROJECT. THIS SWPPP WAS PREPARED BY AN INDIVIDUAL THAT HAS BEEN PROPERLY TRAINED IN ACCORDANCE TOM PART III.F OF THE NPDES PERMIT (CERTIFICATION CARDS ARE AVAILABLE UPON REQUEST). ROSHELL ENGINEERING, LLC WILL OFFER GUIDANCE FOR COMPLIANCE WITH THE NPDES PERMIT BEFORE, DURING, AND AFTER CONSTRUCTION OF THE PROJECT.

SWPPP DEVELOPER/WATER RESOURCE ENGINEER:	SWPPP CERTIFICATION
ROSHELL ENGINEERING (BRENT ROSHELL)	DESIGN OF CONSTRUCTION SWPPP
6192 267TH CT WYOMING, MN 55092	DR. SHRI WAMASWAMY
763-286-0521/roshellengineering@gmail.COM	EXPIRATION MAY 31, 2018

AGENCY CONTACTS

AGENCY	PERMIT	NAME	PHONE NUMBER/E-MAIL
MPCA (EMERGENCY)	N/A	STATE DUTY OFFICER	1-800-422-0798
MPCA	NPDES-CSW #XXXXXXXXX	SCOTT FOX	651-757-2368/ SCOTT.FOX@STATE.MN.U S
ACOE	SECTION 404	OFFICER	651-290-5525
DNR	N/A	N/A	N/A
ANOKA SWCD	WCA	KRIS GUENTZEL	763-434-2030/ KRIS.GUENTZEL@ANOKASWCD.ORG
WATERSHED DISTRICT	LRRWMO	BOB OBERMEYER	

PROJECT DESCRIPTION & SCHEDULE

COVENANT MEADOWS IS A RESIDENTIAL SUBDIVISION COMPRISED OF 12 LOTS TO BE CONSTRUCTED IN 1 PHASE. THE CONSTRUCTION ACTIVITIES WILL INCLUDE GRADING OPERATIONS OF STREETS, HOUSEPADS, SURFACE DRAINAGE, AND PONDS. UTILITY CONSTRUCTION, EXPOSED SOIL STABILIZATION, AND PAVING WILL OCCUR AFTER GRADING OPERATIONS.

TENTATIVE CONSTRUCTION SCHEDULE (OPERATOR SHOULD PROVIDE ESTIMATED CONSTRUCTION SCHEDULE TO THE ENGINEER)

CONSTRUCTION ACTIVITIES:	
CLEARING & GRUBBING OPERATIONS, GRADING, TEMP,	APRIL 2017
POND	APRIL 2017
BRIDGE	N/A
CULVERT REMOVAL AND REPLACEMENT	N/A
CURB & GUTTER/SIDEWALK	JUNE 2017
SMALL UTILITIES	N/A
PAVING	JUNE 2017
INITIAL TURF, BRIDGE RAILING/LIGHTING	MAY 2017
LANDSCAPING, FINAL TURF, MISC.	JULY - OCT 2017

PRE-CONSTRUCTION IMPERVIOUS SURFACE AND DISTURBED AREA CALCULATIONS

TOTAL AREA TO BE DISTURBED - 9.70 ACRES
IMPERVIOUS AREA: PRE-CONSTRUCTION = 0.00/POST-CONSTRUCTION = 2.30 ACRES
NET INCREASE OF IMPERVIOUS AREA = 2.30 ACRES

PERMANENT STORMWATER MANAGEMENT SYSTEMS

THE NPDES PERMANENT WATER QUALITY VOLUME (PART III.D) FROM THE NET NEW IMPERVIOUS SURFACES OF THE PROJECT IS PROVIDED IN THE STORM WATER SUMMARY. HYDROLOGIC AND WATER QUALITY MODELING DATA IS AVAILABLE UPON REQUEST.

LOCATION OF SWPPP COMPONENTS

DESCRIPTION	TITLE	LOCATION
SWPPP NARRATIVE	STORM WATER POLLUTION PREVENTION PLAN NARRATIVE	SHEET SW1 & 2
SITE CONDITIONS	STORM WATER POLLUTION PREVENTION PLAN NARRATIVE	SHEET SW1 & 2
SITE MAP (SOILS, WATER RESOURCES, POTENTIAL POLLUTANT GENERATING ACTIVITIES)	SWPPP WATER RESOURCES & SOILS MAP, SWPPP NARRATIVE	SHEET SW1 & 2
CONSTRUCTION PHASING/STAGING, BUFFERS & AREAS NOT TO BE DISTURBED	SWPPP NARRATIVE	
DIRECTION OF FLOW (PRE- & POST-CONSTRUCTION	DRAINAGE PLAN	SHEET G1
IMPERVIOUS SURFACES	CONSTRUCTION PLAN & PROFILE	SHEET C1 & C2
TEMPORARY EROSION & SEDIMENT CONTROL BMPS/STEEP SLOPES (3:1), DNR FISH EXCLUSION "WORK IN WATER RESTRICTIONS - REFER TO SWPPP",	TEMPORARY EROSION AND SEDIMENT CONTROL PLAN, SWPPP NARRATIVE	SHEET G1
PERMANENT EROSION CONTROL BMPS	TURF ESTABLISHMENT PLAN, SWPPP NARRATIVE	SHEET SW1 & SW2
STORM SEWER	DRAINAGE PLAN	SHEET G1
GRADING	GRADING PLAN	SHEET G1
ESTIMATED BMP QUANTITIES	ESTIMATED QUANTITIES	SHEET SW 2
BMP DETAILS/SPECIFICATIONS	MISC. DETAILS, SWPPP NARRATIVE	SHEET G1, D1-3
HYDROLOGIC/WATER QUALITY MODELING		AVAILABLE UPON REQUEST

EXISTING SITE CONDITIONS, SOILS, & WATER RESOURCES

SOILS AND NATIVE TOPSOIL: NATIVE TOPSOIL WILL BE STRIPPED AND STOCKPILED AND FINAL GRADING OPERATIONS, WHERE INDICATED IN THE CONSTRUCTION PLANS AND SPECIFICATIONS. METHODS AND EQUIPMENT TO MINIMIZE SOIL COMPACTION (IN PROPOSED INFILTRATION AREAS, DRIP LINE OF TREES TO BE PRESERVED, ETC.) SHALL BE DETERMINED BY THE OPERATOR'S SWPPP AMENDMENT. TRACKED VEHICLES ARE PREFERRED AND WHEELED VEHICLES ARE DISCOURAGED IN THESE AREAS.

DESCRIPTION OF RECEIVING WATERS (LOCATED WITHIN 1-MILE): STORMWATER FROM THIS PROJECT WILL BE CONVEYED INTO SEVERAL STORM SEWER PIPES AND STORMWATER PONDS. PROJECT DISCHARGE POINTS . THE NPDES PERMANENT WATER QUALITY VOLUME (PART III.D) FROM THE NET NEW IMPERVIOUS SURFACES OF THE PROJECT IS PROVIDED IN THE CONSTRUCTED PONDS. HYDROLOGIC AND WATER QUALITY MODELING DATA IS AVAILABLE UPON REQUEST.

DESCRIPTION OF IMPAIRED WATERS OR WATER SUBJECT TO TMDLS: A SPECIAL AND IMPAIRED WATERS SEARCH WAS COMPLETED USING THE MPCA SEARCH ENGINE (HTTP://PCA-GIS02.PCA.STATE.MN.US/CSW/INDEX.HTML) ON 12-7-2016 BASED ON THIS REVIEW, THE FOLLOWING SPECIAL OR IMPAIRED WATERS (WITH CONSTRUCTION RELATED IMPAIRMENTS) ARE LOCATED WITHIN ONE MILE OF, AND DOWNSTREAM OF ANY PROJECT DISCHARGE POINTS: NO DISCHARGE POINTS

C.1.A EXPOSED SOILS: OPERATOR SHALL STABILIZE ALL EXPOSED SOIL AREAS WITH (7) DAYS AFTER THE CONSTRUCTION ACTIVITY IN THAT PORTION OF THE SITE HAS TEMPORARILY OR PERMANENTLY CEASED (APPENDIX A.C.1.A).

C.1.B TEMPORARY BASIN: OPERATOR SHALL ADHERE TO THE REQUIREMENTS DESCRIBED IN PART III.C. 1-5 OF THE NPDES CONSTRUCTION PERMIT FOR COMMON DRAINAGE LOCATIONS THAT SERVE AN AREA WITH FIVE (10) OR MORE ACRES DISTURBED.

C.2 POST CONSTRUCTION: THE WATER QUALITY VOLUME THAT MUST BE TREATED BY THE PROJECT'S PERMANENT STORMWATER MANAGEMENT SYSTEM DESCRIBED IN PART III.D. SHALL BE ONE (1) INCH OF RUNOFF FROM THE NEW IMPERVIOUS SURFACES CREATED BY THE PROJECT. WHERE SITE CONDITIONS ALLOW. AT LEAST ONE (1) INCH OF THE WATER QUALITY VOLUME MUST BE INFILTRATED. SEE PART III.D. FOR MORE INFORMATION ON INFILTRATION DESIGN AND APPROPRIATE SITE CONDITIONS. IF IT IS DETERMINED THAT SITE CONDITIONS ARE NOT APPROPRIATE FOR INFILTRATION (E.G. LACK OF 3 FT. OF SEPARATION TO SEASONALLY SATURATED GROUND WATER, PROXIMITY TO BEDROCK, CONTAMINATED SOILS) THE REASONS SHOULD BE DOCUMENTED IN THE SWPPP FOR THE PROJECT. INFILTRATION IS NOT REQUIRED IN HYDROLOGIC SOIL GROUP D SOILS.

C.3 BUFFER ZONE: AN UNDISTURBED BUFFER ZONE OF NOT LESS THAN 50 LINEAR FEET FROM THE SPECIAL WATER (NOT INCLUDING TRIBUTARIES) SHALL BE MAINTAINED AT ALL TIMES. EXCEPTIONS FROM THIS REQUIREMENT FOR AREAS, SUCH AS WATER CROSSINGS, LIMITED WATER ACCESS AND RESTORATION OF THE BUFFER ARE ALLOWED IF THE PERMITTEE FULLY DOCUMENTS IN THE SWPPP THE CIRCUMSTANCES AND REASONS THAT THE BUFFER ENCROACHMENT IS NECESSARY. REPLACEMENT OF EXISTING IMPERVIOUS SURFACE WITHIN THE BUFFER IS ALLOWED UNDER THIS PERMIT. ALL POTENTIAL WATER QUALITY, SCENIC AND OTHER ENVIRONMENTAL IMPACTS OF THESE EXCEPTIONS MUST BE MINIMIZED BY THE USE OF ADDITIONAL OR REDUNDANT BMPS AND DOCUMENTED IN THE SWPPP FOR THE PROJECT.
C.4 ENHANCED RUNOFF CONTROLS: THE PERMANENT STORMWATER MANAGEMENT SYSTEM MUST BE DESIGNED SUCH THAT THE PRE- AND POST-PROJECT RUNOFF RATE AND VOLUME FROM THE 1 AND 2-YEAR 24-HOUR PRECIPITATION EVENTS REMAIN THE SAME OR ARE REDUCED.

C.5 TEMPERATURE CONTROLS: THE PERMANENT STORMWATER MANAGEMENT SYSTEM MUST BE DESIGN SUCH THAT THE DISCHARGE FROM THE PROJECT WILL MINIMIZE ANY INCREASE IN THE TEMPERATURE OF TROUT STREAM RECEIVING WATERS RESULTING FROM THE 1-AND 2-YEAR 24-HOUR PRECIPITATION EVENTS. THIS INCLUDES ALL TRIBUTARIES OF DESIGNATED TROUT STREAMS WITHIN THE SECTION THAT THE TROUT STREAM IS LOCATED. PROJECTS THAT DISCHARGE TO TROUT STREAMS MUST MINIMIZE THE IMPACT USING ONE OR MORE OF THE FOLLOWING MEASURES, IN ORDER OF PREFERENCE:
A. MINIMIZE NEW IMPERVIOUS SURFACES.
B. MINIMIZE THE DISCHARGE FROM THE CONNECTED IMPERVIOUS SURFACES BY DISCHARGING TO VEGETATED AREAS, OR GRASS SWALES, AND THROUGH THE USE OF OTHER NON-STRUCTURAL CONTROLS.
C. INFILTRATION OR EVAPO-TRANSPIRATION OF RUNOFF IN EXCESS OF PRE-PROJECT CONDITIONS (UP TO THE 2-YEAR 24-HOUR PRECIPITATION EVENT.

POTENTIAL FOR SEDIMENT AND/OR OTHER POLLUTANT(S) DISCHARGING FROM THE PROJECT SITE

THE TEMPORARY EROSION AND SEDIMENT CONTROL BMPS IN THIS SWPPP HAVE BEEN DESIGNED TO MINIMIZE THE POTENTIAL OF SEDIMENTS DISCHARGING OFF-SITE FROM A 0.5 INCH RAINFALL WITHIN A 24-HOUR PERIOD. THE NOAA ATLAS 14 POINT PRECIPITATION FREQUENCY ESTIMATE FOR THE PROJECT LOCATION WAS REVIEWED AND USED FOR ANTICIPATED INSPECTION FREQUENCY, BMP DESIGN, AND ESTIMATING CONSTRUCTION ACTIVITIES IN THIS SWPPP. ATLAS 14 RESULTS DO NOT NECESSARILY REFLECT ANY DESIGN CRITERIA IN THE PERMANENT STORMWATER MANAGEMENT SYSTEM.

ROUTINE INSPECTION AND BMP MAINTENANCE BY THE OPERATOR IS CRUCIAL IN ENSURING THE FUNCTIONALITY OF EACH BMP. STEEP SLOPES AND OTHER ENVIRONMENTALLY SENSITIVE AREAS THAT ARE AT A HIGHER RISK OF SEDIMENTATION ARE DEFINED IN THE SWPPP (IF APPLICABLE).

CONSTRUCTION PHASING/STAGING, BUFFERS, & AREAS NOT TO BE DISTURBED

THE PRESERVED AREAS OF EXISTING VEGETATION WILL BE IDENTIFIED ON THE PLAN SHEETS AS "DO NOT DISTURB AREA". THE OPERATOR IS RESPONSIBLE FOR PRESERVING A 50 FOOT NATURAL BUFFER OR (IF INFEASIBLE) PROVIDE REDUNDANT SEDIMENT CONTROL BMPS, WHEN A SURFACE WATER IS LOCATED WITHIN 50 FEET AND RECEIVES DRAINAGE FROM THE PROJECT'S GRADING LIMITS. THIS REQUIREMENT DOES NOT APPLY TO ADJACENT ROAD SIDE DITCHES, JUDICIAL/COUNTY DITCHES, STORMWATER CONVEYANCES, STORM DRAIN INLETS, AND SEDIMENT BASINS.

THERE IS NO CONSTRUCTION PHASING OR STAGING DEFINED BY THE OWNER FOR THIS PROJECT. THE SCHEDULE FOR INSTALLING TEMPORARY BMPS SHALL BE INCORPORATED INTO THE OPERATOR'S WEEKLY SCHEDULE FOR EACH CONSTRUCTION STAGE AND PRESENTED TO THE OWNER'S REPRESENTATIVE 9PER MNDOT SPEC 1717.D).

ENVIRONMENTALLY SENSITIVE AREAS

STEEP SLOPES: EXISTING AND PROPOSED SLOPES 1 IN 3 (33.33% AND STEEPER) THAT ARE PROPOSED TO BE DISTURBED ARE ILLUSTRATED ON THE STEEP SLOPES MAYBE TEMPORARILY CREATED DURING GRADING OPERATIONS, AT WHICH TIME TEMPORARY BMPS MUST BE IMPLEMENTED BY THE OPERATOR (THROUGH AN APPROVED SWPPP AMENDMENT) WITHIN 14 DAYS OF NO LONGER WORKING THE STEEP SLOPE.

CONTAMINATED PROPERTIES: THE MPCA'S "WHAT'S IN MY NEIGHBORHOOD" DATABASE (PCA-GIS02.PCA.STATE.MN.US/WIMN2/INDEX.HTML) WAS REVIEWED ON 12-7-16. THE RESULTS OF THIS REVIEW SHOW NO KNOWN CONTAMINATED PROPERTIES OR LEAK SOURCES LOCATED WITHIN AND ADJACENT TO THE PROJECT LIMITS. NO PRE-EXISTING HAZARDOUS MATERIALS OR WASTES ARE ANTICIPATED TO BE IMPACTED BY THE PROJECT.

STORMWATER POLLUTION MITIGATION MEASURES (AS IDENTIFIED FROM ENVIRONMENTAL REVIEW): NO FORMAL ENVIRONMENTAL REVIEW WAS REQUIRED FOR THIS PROJECT, THEREFORE, NO ADDITIONAL STORMWATER RELATED MITIGATION MEASURES APPLY.

KARST AREAS: THERE ARE NO KNOWN KARST AREAS WITHIN OR ADJACENT TO THE PROJECT LIMITS.

SITE PLAN REQUIRED AREAS: NO AREAS OF "HIGH ENVIRONMENTAL RISKS" ARE KNOWN TO BE LOCATED WITHIN OR IMMEDIATELY ADJACENT TO THE PROJECT LIMITS.
EACH SITE PLANS MUST DETAIL PROPOSED ACTIVITIES, CORRESPONDING SCHEDULING, STAGING, TEMPORARY EROSION AND SEDIMENT CONTROLS, AND BMP DETAILS PER SECTION 1717 OF THE MNDOT STANDARD SPECIFICATIONS FOR CONSTRUCTION. SITE PLANS MUST BE APPROVED BY PROJECT ENGINEER PRIOR TO INITIATING THE SPECIFIED WORK WITHIN EACH SITE PLAN AREA.

FLOOD CONTINGENCY PLAN: NO PROJECT ACTIVITIES ARE LOCATED WITHIN A 100-YEAR FLOODPLAIN OR FLOODWAY, THEREFORE, A FLOOD CONTINGENCY PLAN IS NOT REQUIRED. THE PROJECT ENGINEER (AT THEIR DISCRETION) MAY REQUIRE A PREVENTATIVE FLOOD CONTINGENCY PLAN FOR SPECIFIC PROJECT ACTIVITIES AND AREAS THAT ARE NOT LOCATED IN A 100-YEAR FLOODPLAIN OR FLOODWAY.

FISH EXCLUSION DATES: OPERATOR IS PROHIBITED FROM CONDUCTING IN-STREAM WORK DURING THE FISH SPAWNING AND MIGRATION DATES OF APRIL 15 TO JUNE 30 FOR NON-TROUT WATERS. IF WORK MUST BE CONDUCTING DURING THIS TIMEFRAME, CONTRACTOR SHALL CONTACT THE LOCAL DNR FISHERIES MANAGER FOR WRITTEN APPROVAL PRIOR TO CONDUCTING THE IN-STREAM WORK.

AQUATIC INVASIVE SPECIES: ALL IN-STREAM AND DEWATERING EQUIPMENT SHALL BE DECONTAMINATED OF ALL AQUATIC PLANTS AND PROHIBIT INVASIVE SPECIES PRIOR TO USING WITHIN SURFACE WATERS ON-SITE AND TRANSPORTING OFF-SITE. ALL DECONTAMINATION ACTIVITIES SHALL MEET THE CHAPTER 1 STANDARDS OF THE MINNESOTA DNR'S BEST PRACTICES MANUAL FOR MEETING DNR GENERAL PUBLIC WATERS WORK PERMIT GP 2004-001.

WETLANDS
WETLANDS, IF ANY, WITHIN THE PROJECT AREA AND MUST BE PROTECTED TO THE MAXIMUM EXTENT POSSIBLE.

APPLICABLE FEDERAL, TRIBAL, STATE OR LOCAL PROGRAMS
THE PROJECT FALLS UNDER THE JURISDICTION OF SEVERAL ENTITIES, AS IDENTIFIED IN THE 'AGENCY CONTACTS" TABLE OF PAGE 1 OF THE SWPPP. THE MORE STRINGENT OF LOCAL VS. STATE VS. FEDERAL RULES SHALL APPLY WHERE THEY CONFLICT. INFORMATION PERTAINING TO THE STATE NPDES PERMIT CAN BE FOUND AT: (HTTP://WWW.PCA.STATE.MN.US/INDEX.PHP/WATER/WATER-TYPES-AND-PROGRAMS/STORMWATER/CONSTRUCTION-STORMWATER/INDEX.HTML). THE OPERATOR IS RESPONSIBLE TO COMPLY WITH ALL APPLICABLE PERMITS, MNDOT SPECIAL PROVISION, MNDOT SPEC BOOK (2014 EDITION), MNDOT SPECIFICATIONS 1717.

DATE	REVISIONS	BY
3/23/17	SITE MAP	BR

RECORD DRAWING

ROSHELL ENGINEERING, LLC
6192 267 TH CT WYOMING, MN 55092
PHONE: 763.286.0521

COVENANT MEADOWS
STORM WATER POLLUTION PREVENTION PLAN
RAMSEY, MINNESOTA

I HEREBY CERTIFY THAT THIS PLAN, SPECIFICATION, OR REPORT WAS PREPARED BY ME OR UNDER MY DIRECT SUPERVISION AND THAT I AM A DULY LICENSED PROFESSIONAL ENGINEER UNDER THE LAWS OF THE STATE OF MINNESOTA.

DATE 2/9/17 REG. NO. 24519

BRENT ROSHELL

DRAWN	BR
DATE	12/19/16
SCALE	-
PROJECT	RE-32
CHECKED	BTR
APPROVED	BTR

SW1

SEQUENCE OF CONSTRUCTION/TIMING OF BMP INSTALLATION

NO CONSTRUCTION OPERATIONS, INCLUDING REMOVALS, THAT REQUIRE EROSION & SEDIMENT CONTROL PER THE SWPPP CAN COMMENCE UNTIL THE OPERATOR'S EROSION CONTROL SUPERVISOR CERTIFIES THE PROPER INSTALLATION OF BMP'S AND A CHAIN OF RESPONSIBILITY FOR SWPPP IMPLEMENTATION IS CREATED FOR ALL OPERATORS ON THE SITE. PERIMETER SEDIMENT CONTROLS (SILT FENCE, INLET PROTECTION, CONSTRUCTION ENTRANCES, ETC.) SHALL BE INSTALLED PRIOR TO THE START OF CONSTRUCTION. THESE PRACTICES SHALL REMAIN IN PLACE UNTIL FINAL STABILIZATION IS ACHIEVED. OPERATOR SHALL IMPLEMENT THE NECESSARY ON SITE BMP'S IN ACCORDANCE WITH THE NPDES PERMIT REQUIREMENTS TO PREVENT NUISANCE CONDITIONS (MN RULES 7050.2010) FROM ANY DISCHARGES UNDER COVERAGE OF THE NPDES PERMIT. IN SOME CASES, MULTIPLE OR REDUNDANT APPLICATIONS OF SOME BMP'S MAY BE NEEDED TO MEET THESE REQUIREMENTS.

INSPECTION, SWPPP AMENDMENTS, RECORD KEEPING, & TRAINING

1. THE SWPPP CHAIN OF RESPONSIBILITY MUST BE AMENDED BY THE OPERATOR WHEN THE IDENTITY OF RESPONSIBLE SITE OPERATORS (EROSION CONTROL SUPERVISOR, SUB-CONTRACTORS, ETC.) ARE KNOWN.
2. THE OPERATOR MUST INSPECT THE ENTIRE CONSTRUCTION SITE AT LEAST ONCE EVERY SEVEN (7) DAYS DURING ACTIVE CONSTRUCTION AND WITHIN 24 HOURS AFTER A RAINFALL EVENT GREATER THAN 0.5 INCHES IN 24 HOURS. THE OPERATOR SHALL PROVIDE A RAINFALL GAUGE ON-SITE, WITHIN ONE MILE OF THE SITE, OR SOURCE OF THE WEATHER REPORTING SYSTEM THAT USES SITE SPECIFIC RAINFALL DATA FROM RADAR SUMMARIES. THE LOCATION AND SOURCE OF THE RAINFALL GAUGE OR REPORTING SYSTEM MUST BE DOCUMENTED IN THE FIRST SWPPP INSPECTION REPORT. THE INSPECTION FREQUENCY MAY BE REDUCED TO ONCE PER MONTH, IF SITE CONDITIONS MEET PART IV.E3 OF THE NPDES PERMIT. ALL INSPECTIONS AND MAINTENANCE CONDUCTED MUST BE RECORDED IN WRITING BY THE OPERATOR AND RETAINED WITH THE SWPPP. RECORDS OF EACH INSPECTION AND MAINTENANCE ACTIVITY SHALL INCLUDE:
   A. DATE, TIME AND NAME OF PERSON(S) CONDUCTING INSPECTIONS;
   B. FINDINGS OF INSPECTIONS, INCLUDING RECOMMENDATIONS FOR CORRECTIVE ACTIONS;
   C. CORRECTIVE ACTIONS TAKEN (INCLUDING DATES, TIMES AND PARTY COMPLETING MAINTENANCE ACTIVITIES); INCLUDING DOCUMENTATION/PHOTOS OF IMPLEMENTED BMPS INTENDED TO CORRECT A PROBLEM BUT FAILED.
   D. DATE AND AMOUNT OF ALL RAINFALL EVENTS GREATER THAN ½ INCH (0.5 INCHES) IN 24 HOURS;
   E. DOCUMENTATION OF CHANGES MADE TO THE SWPPP.
3. SWPPP AMENDMENTS AND SITE PLANS WILL BE PREPARED BY THE OPERATOR AND SUBMITTED TO THE OWNER FOR REVIEW AND WRITTEN APPROVAL BY THE PROJECT OWNER (OR DESIGNATED REPRESENTATIVE). ALL OWNER ACCEPTED AND DENIED SWPPP AMENDMENTS AND SITE PLANS MUST BE RECORDED IN WRITING RETAINED WITH THE SWPPP.
4. THE SWPPP SHALL BE AMENDED TO INCLUDE ADDITIONAL OR MODIFIED BMPS, DESIGNED TO CORRECT IDENTIFIED PROBLEMS OR ADDRESS SITUATIONS (UNDER PART III.B OF THE NPDES PERMIT), PRIOR TO CONDUCTING SPECIFIC STAGES/PHASES OF THE PROJECT, AS REQUIRED BY THE OWNER AND DEFINED IN THIS PROJECT SWPPP.

SUMMARY OF OPERATOR PREPARED SWPPP AMENDMENTS (REQUIREDBY OWNER)

SWPPP AMENDMENT NAME	SWPPP AMENDMENT DETAILS	SUBMITTAL TIMEFRAME
OPERATOR CHAIN OF RESPONSIBILITY	REFER TO "CONTACT INFORMATION/ RESPONSIBLE PARTIES' SECTION	7 DAYS PRIOR TO INITIATING WORK
BMP AMENDMENTS	SUBSTITUTED, ADDITIONAL, OR REDUNDANT BMPS TO COMPENSATE FOR FAILING/FAILED BMPS	DURING/AFTER CONSTRUCTION ACTIVITIES
METHODS TO MINIMIZE SOIL COMPACTION	REFER TO "EXISTING SITE CONDITIONS, SOILS AND WATER RESOURCES" SECTION	7 DAYS PRIOR TO WORK WITHIN INFILTRATION BASINS AND PRESERVED TREE AREAS
STEEP SLOPES PHASING PLAN	REFER TO "ENVIRONMENTALLY SENSITIVE AREAS" SECTION	
SPILL PREVENTION & RESPONSE PLAN	REFER TO "POLLUTION PREVENTION MEASURES"	7 DAYS PRIOR TO INITIATING WORK
DEWATERING PLAN	REFER TO "DEWATERING" SECTION	7 DAYS PRIOR TO ACTIVITY

1. THE SWPPP (ORIGINAL OR COPIES), ALL CHANGES TO THE SWPPP, PROJECT MANUAL, AND INSPECTIONS/MAINTENANCE RECORDS MUST BE KEPT AT THE SITE DURING CONSTRUCTION BY THE OPERATOR WHO HAS OPERATIONAL CONTROL OF THAT PORTION OF THE SITE. THE SWPPP CAN BE KEPT IN THE FIELD OFFICE OR ON SITE VEHICLE DURING NORMAL WORKING HOURS.
2. THE OPERATOR MUST ASSIGN A TRAINED INDIVIDUAL (S) (PURSUANT TO PARTS III.A.3 & III.F) TO OVERSEE THE IMPLEMENTATION, MAINTENANCE, AND REPAIR OF BMPS. THIS INDIVIDUAL (S) SHALL ALSO PERFORM INSPECTIONS, REVISE/AMEND THE SWPPP (DOCUMENT IN SWPPP AS NECESSARY), AND BE AVAILABLE FOR AN ONSITE INSPECTION WITHIN 72 HOURS UPON REQUEST BY THE PERMITTED OWNER FOR ITS DESIGNEE), LOCAL GOVERNMENT UNITS, OR MPCA.

POLLUTION PREVENTION MANAGEMENT MEASURES

POTENTIAL SOURCES OF POLLUTANTS FROM CONSTRUCTION ACTIVITIES INCLUDE:

- SEDIMENT AND FUGITIVE DUST GENERATED FROM CLEARING AND GRUBBING, IMPORT/EXPORT OPERATIONS, REMOVALS/COMPACTION, MASS/FINE GRADING, EXCAVATIONS, TRENCHING, TOPSOIL STRIPING STOCKPILING, WET/DRY PAVEMENT CUTTING, STREET CONSTRUCTION.
- BASIC/ACIDIC PH LEVELS FROM CURB AND GUTTER, MANHOLE STRUCTURES, SIDEWALKS, DRIVEWAY APRONS, FOUNDATIONS, BRIDGE ABUTMENTS, WET/DRY PAVEMENT CUTTING, MASONRY WASHOUT/CLEANOUT.
- EXCESS NUTRIENTS FROM LANDSCAPING INSTALLATIONS, SOIL ADDITIVES, FERTILIZATION, MULCHING.
- HYDROCARBONS FROM STREET CONSTRUCTION, DEMOLITION/REMOVALS, WET/DRY PAVEMENT CUTTING.

OPERATOR WILL COMPLY WITH ALL OF THE POLLUTION PREVENTION AND MANAGEMENT MEASURES IDENTIFIED IN THE NPDES-CSW PERMIT. OPERATOR WILL SUBMIT A SPILL PREVENTION AND RESPONSE PLAN (SPRP) TO THE ENGINEER PRIOR TO ANY CONSTRUCTION ACTIVITY. THE SPRP MUST SATISFACTORILY ADDRESS (AT A MINIMUM) THE FOLLOWING NPDES REQUIREMENTS BY THE PROPOSED IMPLEMENTATION AND MAINTENANCE OF APPROPRIATE BMPS:

NO-EXPOSURE: CONSTRUCTION AND BUILDING PRODUCTS (THAT HAVE THE POTENTIAL TO LEACH POLLUTANTS), PESTICIDES, HERBICIDES, INSECTICIDES, FERTILIZERS, TREATMENT CHEMICALS, AND LANDSCAPING MATERIALS MUST BE UNDER COVER (PLASTIC SHEETING OR TEMPORARY ROOFS) TO MINIMIZE CONTACT WITH STORMWATER AND PRECIPITATION.

SOLID WASTE: (SEDIMENT, ASPHALT, CONCRETE MILLINGS, CONSTRUCTION, AND DEMOLITION DEBRIS) AND OTHER WASTES MUST BE DISPOSED OF PROPERLY AND SHALL COMPLY WITH MPCA DISPOSAL REQUIREMENTS (CH. 7035).

HAZARDOUS MATERIALS: (E.G. GAS, DIESEL, OIL, ANTIFREEZE, PAINT SOLVENTS, SOAPS, DETERGENTS, WOOD PRESERVATIVES, CLEANING SOLVENTS, CURING COMPOUNDS, ACIDS, ETC.) MUST BE STORED IN SEALED CONTAINERS (WITH SECONDARY SPILL CONTAINMENT) IN RESTRICTED ACCESS AREAS TO PREVENT VANDALISM. STORAGE AND DISPOSAL OF HAZARDOUS WASTE AND MATERIALS MUST BE IN COMPLIANCE WITH MPCA REGULATIONS (CH. 7045) INCLUDING SECONDARY CONTAINMENT.

PORTABLE TOILETS: MUST BE POSITIONED AND SECURED SO THEY ARE NOT TIPPED OR KNOCKED OVER. WASTE MUST BE DISPOSED OF PROPERLY IN ACCORDANCE WITH MPCA GUIDELINES (CH. 7041).

EQUIPMENT/VEHICLE FUELING, EXTERNAL WASHING, AND MAINTENANCE PRACTICES: WHEN VEHICLE FUELING, MAINTENANCE, OR EXTERNAL WASHING MUST OCCUR ON-SITE, THE ACTIVITY IS LIMITED TO A CONTAINED PORTION OF THE STAGING AREA, UNLESS INFEASIBLE THROUGH A SWPPP AMENDMENT. PROCEDURES FOR SPILL RESPONSE AND MATERIALS FOR CONTAINMENT AND CLEAN UP (DRIP PANS, DRY ABSORBENTS, AND SPILL KITS) WILL BE AVAILABLE AT ALL TIMES ON-SITE. ENGINE DEGREASING IS PROHIBITED ON-SITE.

CONCRETE, STUCCO, PAINT, CURING COMPOUNDS, SOLVENTS, AND OTHER WASHOUT WASTES: TEMPORARY OR LONG-TERM STORAGE OF WASHOUT WASTE IS PROHIBITED ON-SITE (SLURRY MUST BE HAULED IMMEDIATELY OFF-SITE). OPERATOR MUST SUBMIT A CONCRETE WASHOUT PLAN TO THE PROJECT ENGINEER FOR APPROVAL OF ALL ON-SITE WASHOUT LOCATIONS. ON-SITE WASHOUT LOCATIONS MUST BE LOCATED 200 FEET FROM AN ENVIRONMENTALLY SENSITIVE AREA AND SURFACE WATERS, HAVE "CONCRETE WASHOUT AREA" SIGNAGE, AND BE CONTAINED IN A LEAK PROOF CONTAINER OR IMPERMEABLE LINER. LIQUID AND SOLID WASTES SHOULD NOT CONTACT THE GROUND (UNLESS PERMITTED IN THE CONCRETE WASHOUT PLAN), BE CONTAINED TO PREVENT RUNOFF FROM THE WASHOUT LOCATION, AND MUST BE DISPOSED OF PROPERLY AND IN COMPLIANCE WITH MPCA REGULATIONS.

CONCRETE, STUCCO, PAINT, CURING COMPOUNDS, SOLVENTS, AND OTHER WASHOUT WASTES: TEMPORARY OR LONG-TERM STORAGE OF WASHOUT WASTE IS PROHIBITED ON-SITE (SLURRY MUST BE HAULED IMMEDIATELY OFF-SITE). OPERATOR MUST SUBMIT A CONCRETE WASHOUT PLAN TO THE PROJECT ENGINEER FOR APPROVAL OF ALL ON-SITE WASHOUT LOCATIONS. ON-SITE WASHOUT LOCATIONS MUST BE LOCATED 200 FEET FROM AN ENVIRONMENTALLY SENSITIVE AREA AND SURFACE WATERS, HAVE "CONCRETE WASHOUT AREA" SIGNAGE, AND BE CONTAINED IN A LEAK PROOF CONTAINER OR IMPERMEABLE LINER. LIQUID AND SOLID WASTES SHOULD NOT CONTACT THE GROUND (UNLESS PERMITTED IN THE CONCRETE WASHOUT PLAN), BE CONTAINED TO PREVENT RUNOFF FROM THE WASHOUT LOCATION, AND MUST BE DISPOSED OF PROPERLY AND IN COMPLIANCE WITH MPCA REGULATIONS.

BURNING: BURNING OF GARBAGE, CONSTRUCTION DEBRIS, TREES, BRUSH, OR OTHER VEGETATIVE MATERIAL IS NOT ALLOWED ON-SITE, UNLESS PRIOR APPROVAL IS GRANTED BY THE OWNER.

EROSION CONTROL PRACTICES, PROCEDURES, & MAINTENANCE STANDARDS

THE OPERATOR IS RESPONSIBLE FOR THE INSTALLATION, OPERATION, AND CONTINUED MAINTENANCE OF ALL TEMPORARY AND PERMANENT WATER QUALITY MANAGEMENT BMPS, AS WELL AS ALL EROSION PREVENTION AND SEDIMENT CONTROL BMPS, FOR THE DURATION OF THE CONSTRUCTION WORK AT TH SITE, UNTIL FINAL STABILIZATION IS ACHIEVED. ALL BMPS MUST BE ADEQUATELY LOCATED, DESIGNED, INSTALLED, AND MAINTAINED TO PREVENT EROSION FROM A MINIMUM 0.5 INCH TOTAL RAINFALL EVENT WITHIN 24 HOURS.

ALL NONFUNCTIONAL BMPS MUST BE REPAIRED, REPLACED, OR SUPPLEMENTED WITH FUNCTIONAL BMPS BY THE END OF THE NEXT BUSINESS DAY AFTER DISCOVERY, OR AS SOON AS FIELD CONDITIONS ALLOW ACCESS UNLESS ANOTHER TIME FRAME IS SPECIFIED IN THE SWPPP. ALL ERODED MATERIAL THAT LEAVES THE SITE SHALL BE COLLECTED BY THE OPERATOR AND RETURNED TO THE SITE AT THE OPERATOR'S EXPENSE AND INCIDENTAL TO THE PROJECT COST.

TEMPORARY OR PERMANENT STABILIZATION SHALL BE INITIATED AS SOON AS POSSIBLE, BUT NO LATER THAN THE END OF THE NEXT WORK DAY FOLLOWING THE DAY EARTH-DISTURBING ACTIVITIES IN THAT PORTION OF THE SITE HAS TEMPORARILY OF PERMANENTLY CEASED. ALL EXPOSED SOIL AREAS SHALL BE STABILIZED WITHIN 14 DAYS AFTER THE CONSTRUCTION ACTIVITY IN THAT PORTION OF THE SITE HAS TEMPORARILY OR PERMANENTLY CEASED. INITIATED STABILIZATION IS DEFINED AS COMPLETING ONE (OR MORE) OF THE FOLLOWING: SOIL PREPARATION FOR VEGETATION, MULCHING (OR OTHER TEMPORARY NON0VEGETATIVE BMP), SEEDING/PLANTING, OR SCHEDULING STABILIZATION MEASURES TO BE FULLY INSTALLED AND COMPLETED WITHIN THE 14 DAY TIMEFRAME.

ALL EXPOSED SOILS WITHIN 200 FEET AND DRAINING TO A DNR PUBLIC WATERS MUST BE STABILIZED WITHIN 24 HOURS OF TEMPORARILY OR PERMANENTLY CEASING WORK, DURING THE FISH SPAWNING PERIOD. TEMPORARY STOCKPILES WITHOUT SIGNIFICANT SILT, CLAY OR ORGANIC COMPONENTS (E. G., CLEAN AGGREGATE STOCKPILES, DEMOLITION CONCRETE STOCKPILES, SAND STOCKPILES) AND THE CONSTRUCTED BASE COMPONENTS OF ROADS, PARKING LOTS AND SIMILAR SURFACES ARE EXEMPT FROM THIS REQUIREMENT, BUT MUST BE IN COMPLIANCE WITH PART IV.C.5.

TEMPORARY STABILIZATION BMPS SHALL ONLY BE IMPLEMENTED WHEN PERMANENT STABILIZATION BMPS CANNOT BE IMPLEMENTED WITHIN THE 14 DAY TIMEFRAME FOR EXPOSED SOILS.

TEMPORARY/PERMANENT DRAINAGE DITCHES & SWALES: THE NORMAL WETTED PERIMETER (2-YEAR, 24-HOUR PRECIPITATION EVENT) OF ANY TEMPORARY OR PERMANENT DRAINAGE DITCH, CHANNEL, OR SWALE THAT DRAINS WATER FROM ANY PORTION OF THE CONSTRUCTION SITE, OR DIVERTS WATER AROUND THE SITE, MUST BE STABILIZED WITHIN THE LAST 200 LINEAL FEET FROM THE PROPERTY EDGE, OR FROM THE POINT OF DISCHARGE INTO ANY SURFACE WATER WITHIN 24 HOURS OF CONNECTION. STABILIZATION REMAINING OF THE REMAINING PORTIONS OF THE CHANNEL MUST BE STABILIZED WITHIN 14 DAYS. ALL STORMWATER CONVEYANCE CHANNELS MUST USE EROSION CONTROL AND VELOCITY DISSIPATION DEVICES WITHIN AND ALONG THE LENGTH OF THE CHANNEL AND AT ANY OUTLETS. TEMPORARY OR PERMANENT DITCHES OR SWALES THAT ARE BEING USED AS A TEMPORARY SEDIMENT CONTAINMENT SYSTEM (WITH PROPERLY DESIGNED ROCK DITCH CHECKS, BIO ROLLS, SILT DIKES ETC.) DO NO NEED TO BE STABILIZED. THESE AREAS MUST BE STABILIZED WITHIN 24 HOURS AFTER NO LONGER BEING USED AS A SEDIMENT CONTAINMENT SYSTEM. MULCH, HYDROMULCH, TACKIFIER, OR POLYARCRYLAMIDE BELOW THE WETTED PERIMETER OF A DITCH, SWALE, OR OTHER SURFACE WATER CONVEYANCE IS NOT ACCEPTABLE STABILIZATION.

EROSION CONTROL BLANKETS/MATS: OPERATOR SHALL VERIFY DURING REGULAR INSPECTIONS THAT NO GULLIES, RILLS, OR SCOUR HOLES HAVE FORMED UNDER EROSION CONTROL BLANKETS AND MATS. ALL REPAIRS MUST BE COMPLETED WITHIN 24 HOURS OF DISCOVERY, OR AS SOON AS FIELD CONDITIONS ALLOW ACCESS.

MULCH: OPERATOR MUST APPLY MULCH IN A UNIFORM PATTERN OVER THE DISTURBED SOILS, TO ACHIEVE A MINIMUM OF 90% GROUND COVER.

DUST CONTROL: DUST FROM THE SITE WILL BE CONTROLLED BY INCREASED STREET SWEEPING AND/OR USING A MOBILE PRESSURE-TYPE DISTRIBUTOR TRUCK TO APPLY POTABLE WATER TO DISTURBED AREAS. THE MOBILE UNIT WILL APPLY WATER AT A RATE NECESSARY TO PREVENT RUNOFF AND PONDING.

STORM SEWER OUTLETS: PIPE OUTLETS MUST HAVE TEMPORARY OR PERMANENT ENERGY DISSIPATION WITHIN 24 HOURS AFTER HYDRAULIC CONNECTION TO A RECEIVING SURFACE WATER.

TEMPORARY & PERMANENT EROSION CONTROL BMPS

TYPE 1 MULCH: APPLY TO DISTURBED SLOPES LESS THAN 1:3 WITH BLOWER EQUIPMENT OR CONCURRENTLY WITH HYDROMULCH AT 2 TONS/ACRE. IMMEDIATELY OVERSPRAY (IF NOT HYDROMULCHED) WITH TACKIFIER (PER MANUFACTURES RECOMMENDED RATES) OR DISC-ANCHORED.

RAPID STABILIZATION METHOD #3: THIS WORK SHALL CONSIST OF OPERATIONS NECESSARY TO RAPIDLY STABILIZE SMALL CRITICAL AREAS WITHIN 200 FT OF SURFACE WATERS, TO PREVENT OFF SITE SEDIMENTATION AND OR TO COMPLY WITH PERMIT REQUIREMENTS. INSTALL PER MNDOT SPECIFICATIONS 2575.3N.

RAPID STABILIZATION METHOD #4: (W0OD FIBER, NATURAL NET ONLY) IS AN ACCEPTABLE BMP FOR DISTURBED AREAS ADJACENT TO ENVIRONMENTALLY SENSITIVE AREAS, SURFACE WATERS, AND WITHIN THE LAST 200 FEET OF DITCH BOTTOMS.

TEMPORARY WINTER COVER: AREAS OF EXPOSED SOILS THAT ARE NOT COMPLETED BEFORE THE WINTER WILL BE STABILIZED WITH TYPE #3 (CERTIFIED AS WEED FREE) ADJACENT TO WETLAND OR STORMWATER PONDS. ALL OTHER DISTURBED AREAS SHALL BE STABILIZED WITH TYPE #1 MULCH, UNLESS ALTERNATIVE MORE PROTECTIVE BMPS ARE SPECIFIC WITHIN THE SWPPP. ALL EXPOSED SOILS SHALL BE STABILIZED BEFORE CONSTRUCTION IS COMPLETED FOR THE SEASON.

HYDRO-MULCH TYPE #5: HYDRAULIC SOIL STABILIZER IN COMBINATION WITH A TACKIFIER WILL BE INSTALLED PER MANUFACTURES SPECIFICATIONS TO EXPOSED SOILS AREAS TO PROVIDE TEMPORARY LONG-TERM OR PERMANENT COVER FOR VEGETATION ESTABLISHMENT.

SEDIMENT CONTROL PRACTICES, PROCEDURES, & MAINTENANCE STANDARDS

DOWN GRADIENT SYSTEMS: IF THE DOWN GRADIENT TREATMENT SYSTEM IS OVERLOADED, ADDITIONAL UP GRADIENT SEDIMENT CONTROL PRACTICES OR REDUNDANT BMPS MUST BE INSTALLED TO ELIMINATE THE OVERLOADING, AND THE SWPPP MUST BE AMENDED TO IDENTIFY THESE ADDITIONAL PRACTICES.

PERIMETER CONTROL BMPS (SILT FENCES, CHIP/SLASH MULCH SACKS, BIOROLLS, FLOATING SILT CURTAIN, ETC.): PERIMETER CONTROL BMPS SHALL BE INSTALLED ON ALL DOWN GRADIENT PERIMETERS AND UPGRADIENT OF ANY BUFFER AREAS, PRIOR TO INITIATING UPGRADIENT LAND DISTURBANCE ACTIVITIES. UPLAND PERIMETER CONTROLS BMPS SHALL BE PLACED AS CLOSE AS POSSIBLE TO FOLLOW A SINGLE CONTOUR ELEVATION. ALL SILT FENCES MUST BE REPAIRED, REPLACED, OR MAINTAINED WHEN THEY BECOME NONFUNCTIONAL OR THE SEDIMENT REACHES ½ OF THE HEIGHT OF THE FENCE. ALL REPAIRS MUST BE COMPLETED BY THE END OF THE NEXT BUSINESS DAY AFTER DISCOVERY, OR AS SOON AS FIELD CONDITIONS ALLOW ACCESS. FLOATING SILT CURTAIN SHALL BE INSTALLED AS CLOSE TO THE SHORELINE AS POSSIBLE FOR SHORELAND/IN-WATER SHORT-TERM CONSTRUCTION ACTIVITIES. AFTER THE SHORT-TERM ACTIVITY IS COMPLETE, AN UPLAND PERIMETER CONTROL MUST BE INSTALLED IF EXPOSED SOILS CONTINUE TO DRAIN TO THE SURFACE WATER.

TEMPORARY & PERMANENT SEDIMENT CONTROL BMPS

SILT FENCE ALONG PROJECT PERIMETER 1800 LF

SECONDARY SILT FENCE 1150 LF

DITCH CHECKS 6 EACH

TEMPORARY ROCK ENTRANCE FOR CONSTRUCTION OPERATIONS.

STREET SWEEPING 18 HOURS

50 FOOT NATURAL BUFFER (S): REFER TO "CONSTRUCTION PHASING/STAGING, BUFFERS, & AREAS NOT TO BE DISTURBED" SECTION OF THIS SWPPP.

TEMPORARY SEDIMENTATION BASINS: WHERE TEN (10) OR MORE ACRES OF DISTURBED SOIL DRAIN TO A COMMON LOCATION, A TEMPORARY SEDIMENT BASIN MUST BE PROVIDED PRIOR TO RUNOFF LEAVING THE CONSTRUCTION SITE OR ENTERING SURFACE WATERS. ALL TEMPORARY BASINS SHALL BE CONSTRUCTED AND OPERATIONAL PRIOR TO GRADING TEN (10) OR MORE ACRES. BASINS MUST PROVIDE A LIVE STORAGE VOLUME FROM A TWO YEAR 24-HOUR STORM EVENT FROM EACH ACRE (DISTURBED AND UNDISTURBED) DRAINING TO THE BASIN. AT A MINIMUM, IF CALCULATIONS ARE NOT PERFORMED THE BASIN SHALL PROVIDE 3,600 CUBIC FEET OF LIVE STORAGE FROM EACH ACRE. THE BASIN INTAKE MUST BE DESIGNED TO WITHDRAW WATER FROM THE SURFACE, PREVENT SHORT CIRCUITING AND THE DISCHARGE OF FLOATING DEBRIS, INCLUDE AN EMERGENCY OVERFLOW ABOVE THE LIVE STORAGE ELEVATION, AND PROVIDE ENERGY DISSIPATION AT THE BASIN OUTLET. BASINS MUST BE DRAINED AND SEDIMENT REMOVED WHEN THE DEPTH OF COLLECTED SEDIMENT IN THE BASIN REACHES ½ THE LIVE STORAGE VOLUME. DRAINAGE AND REMOVAL MUST BE COMPLETED WITHIN 72 HOURS OF DISCOVERY, OR AS SOON AS FIELD CONDITIONS ALLOW ACCESS. IF A BASIN IS INFEASIBLE WITHIN THE PROJECT LIMITS, EQUIVALENT SEDIMENT CONTROL BMPS MUST BE IMPLEMENTED AND DOCUMENTED IN THE SWPPP OR SWPPP AMENDMENT.

SEDIMENT TRAPS: WHERE A TEMPORARY SEDIMENT BASIN MEETING THE REQUIREMENTS OF THIS PART IS INFEASIBLE, EQUIVALENT SEDIMENT CONTROLS SUCH AS SMALLER SEDIMENT BASINS, AND/OR SEDIMENT TRAPS, SILT FENCES, VEGETATIVE BUFFER STRIPS, OR ANY APPROPRIATE COMBINATION OF MEASURES ARE REQUIRED FOR ALL DOWN-SLOPE BOUNDARIES OF THE CONSTRUCTION AREA AND FOR SIDE-SLOPE BOUNDARIES AS DICTATED BY INDIVIDUAL SITE CONDITIONS. IN DETERMINING WHETHER INSTALLING A SEDIMENT BASIN INS INFEASIBLE, THE PERMITTEE(S) MUST CONSIDER PUBLIC SAFETY AND MAY CONSIDER FACTORS SUCH AS SITE SOILS, SLOPE, AND AVAILABLE AREA ON SITE. THIS DETERMINATION OF INFEASIBILITY MUST BE DOCUMENTED IN THE SWPPP PER PART III.A.5.m.

TEMPORARY STOCKPILES: ALL STOCKPILES MUST HAVE SILT FENCE OR EQUIVALENT PERIMETER SEDIMENT CONTROLS IMPLEMENTED AND MAINTAINED AT ALL TIMES. PILES CANNOT BE PLACED IN BUFFER AREAS OR SURFACE WATERS, INCLUDING STORMWATER CONVEYANCES SUCH AS CURB AND GUTTER SYSTEMS, OR CONDUITS AND DITCHES UNLESS THERE IS A BYPASS IN PLACE TO PREVENT STORMWATER RUN-ON INTO THE STOCKPILE.

CONSTRUCTION SITE ENTRANCE/VEHICLE TRACKING: OPERATOR MUST MINIMIZE SEDIMENT FROM LEAVING THE CONSTRUCTION SITE (OR ONTO STREETS WITH THE SITE) BY IMPLEMENTING BMPS SUCH AS ROCK PADS, SLASH MULCH, CONCRETE OR STEEL WASH RACKS, OR EQUIVALENT SYSTEMS. STREET SWEEPING MUST BE USED DAILY DURING CONSTRUCTION OPERATIONS IF SUCH BMPS ARE NOT ADEQUATE TO PREVENT SEDIMENT FROM BEING TRACKED ONTO THE STREET. TRACKED SEDIMENT MUST BE REMOVED FROM ALL PAVED SURFACES (ON AND OFF-SITE) WITHIN 24 HOURS OF DISCOVERY, OR SOONER AS DIRECTED BY THE PROJECT OWNER. MULTIPLE STREET SWEEPINGS AT THE OPERATOR'S EXPENSE MAY BE REQUIRED ON ALL ENTRY/EXIT POINTS TO THE SITE AT THE DISCRETION OF THE PROJECT OWNER.

SURFACE WATERS: INCLUDING OFF-SITE AND DOWNSTREAM DRAINAGE DITCHES, CATCH BASINS, AND CONVEYANCE SYSTEMS, MUST BE INSPECTED FOR EVIDENCE OF EROSION AND SEDIMENT DEPOSITION. THE REMOVAL AND STABILIZATION OF EXPOSED SOILS MUST TAKE PLACE WITHIN SEVEN (7) DAYS OF DISCOVERY UNLESS PRECLUDED BY LEGAL, REGULATORY, OR PHYSICAL ACCESS CONSTRAINTS. IF PRECLUDED, REMOVAL AND STABILIZATION MUST TAKE PLACE WITHIN SEVEN (7) CALENDAR DAYS OF OBTAINING ACCESS. THE PERMITTEES ARE RESPONSIBLE FOR CONTACTING ALL LOCAL, REGIONAL, STATE AND FEDERAL AGENCIES AND RECEIVING ANY APPLICABLE PERMITS, PRIOR TO CONDUCTING ANY WORK.

INLET PROTECTION: ALL STORM DRAIN INLETS (INCLUDING DOWN GRADIENT, OFF-SITE) MUST BE PROTECTED BY APPROPRIATE BMPS DURING CONSTRUCTION UNTIL ALL SOURCES WITH POTENTIAL FOR DISCHARGING TO THE INLET HAVE BEEN STABILIZED. SILT FENCE IS NOT AN ACCEPTABLE CATCH BASIN INLET PROTECTION BMP. CONTRACTOR SHALL CLEAN, REMOVE AND DISPOSE OF SEDIMENT, AND/OR REPLACE STORM DRAIN INLET PROTECTION ON A ROUTINE BASIS TO ENSURE THE DEVICE IS FULLY FUNCTIONAL PRIOR TO THE NEXT FORECASTED PRECIPITATION EVENT (30% OR GREATER) INLET PROTECTION MAY BE REMOVED FOR A PARTICULAR INLET IF A SPECIFIC SAFETY CONCERN (STREET FLOODING/FREEZING) HAS BEEN IDENTIFIED AND THE PERMITTEE(S) HAVE RECEIVED WRITTEN CORRESPONDENCE FROM THE JURISDICTIONAL AUTHORITY (E.G. CITY/COUNTY/TOWNSHIP/MNDOT ENGINEER) VERIFYING THE NEED FOR REMOVAL. WRITTEN CORRESPONDENCE MUST BE DOCUMENTED IN THE SWPPP AND AVAILABLE WITHIN 72 HOURS UPON REQUEST. PERMISSION TO REMOVE INLET PROTECTION BASED ON A SPECIFIC SAFETY CONCERN MUST STILL BE OBTAINED FROM THE LOCAL JURISDICTIONAL AUTHORITY WITHIN 30 DAYS OF REMOVAL.

CHEMICAL TREATMENTS: OPERATOR MUST AMEND THE SWPPP TO INCLUDE THE INTENDED USES AND LOCATIONS OF FLOCCULANTS, POLYMERS, AND OTHER SEDIMENTATION TREATMENT CHEMICALS. CHEMICAL TREATMENTS MAY ONLY BE APPLIED IN AREAS WHERE TREATED STORMWATER IS DIRECTED TO A RECEIVING SEDIMENT CONTROL SYSTEM (NOT DIRECTLY DISCHARGED TO NATURAL WATER BODIES). THIS INCLUDES DOCUMENTING THE EXPECTED SOIL TYPES, MANUFACTURER'S RECOMMENDED DOSING, APPLICATION RATES/QUANTITIES, AND MONITORING RESULTS (TURBIDITY, PH).

DEWATERING, STREAM DIVERSION, AND BASIN DRAINING

DEWATERING, STREAM DIVERSION, OR BASIN DRAINING IS ANTICIPATED DURING CONSTRUCTION OF THIS PROJECT. DITCH REALIGNMENT, CULVERT CONSTRUCTION, AND NEW POND GRADING WILL REQUIRE SITE DEWATERING. WHEN DEWATERING OR BASIN DRAINING IS REQUIRED, THE CONTRACTOR SHALL SUBMIT A DEWATERING PLAN AND NARRATIVE TO THE PROJECT ENGINEER FOR APPROVAL PRIOR TO UNDERTAKING THESE ACTIVITIES. DEWATERING PLAN MUST INCLUDE BMP'S TO PREVENT SEDIMENT TRANSPORT, EROSION, AND ADVERSE IMPACTS TO DOWNSTREAM RECEIVING WATERS. THE DEWATERING PLAN MUST ALSO INCLUDE ANY SPECIFIC CHEMICAL TREATMENTS (FLOC, POLYMERS, ETC.) THAT WILL BE USED. IF AN APPROVED TMDL WASTE LOAD ALLOCATION IS ESTABLISHED FOR CONSTRUCTION ACTIVITIES ON A RECEIVING WATERBODY, THE OPERATOR MUST IMPLEMENT ALL NECESSARY BMP'S TO MEET THE ASSIGNED WLA. THE DEWATERING PLAN AND DNR APPROPRIATIONS PERMIT WILL BECOME PART OF THE SWPPP. WATER THAT IS TURBID OR HAS SEDIMENT MUST BE DISCHARGED TO A TEMPORARY OR PERMANENT SEDIMENTATION BASIN (AND/OR OTHER APPROPRIATE BMPS) ON THE PROJECT SITE WHENEVER POSSIBLE. DISCHARGE FROM THE TEMPORARY OR PERMANENT SEDIMENTATION BASIN MUST BE VISUALLY CHECKED TO ENSURE ADEQUATE TREATMENT IS OBTAINED IN THE BASIN AND THAT NUISANCE CONDITIONS (SEE MINN. R. 7050.0210, SUBP. 2), IMPACTS TO WETLANDS, AND EROSION IN RECEIVING CHANNELS OR ON DOWNSLOPE PROPERTIES WILL NOT RESULT FROM THE DISCHARGE. THE DISCHARGE MUST BE DISPERSED OVER NATURAL ROCK RIPRAP, SAND BAGS, PLASTIC SHEETING, OR OTHER ACCEPTED ENERGY DISSIPATION MEASURES. ADEQUATE SEDIMENTATION CONTROL MEASURES AND ADDITIONAL FILTRATION BMPS ARE REQUIRED FOR DISCHARGE WATER THAT CONTAINS SUSPENDED SOLIDS, OIL, OR GREASE.

FINAL STABILIZATION

FINAL STABILIZATION IS ACHIEVED WHEN THE FOLLOWING FOUR PARAMETERS ARE COMPLETED, PRIOR TO SUBMISSION OF THE NOTICE OF TERMINATION TO MPCA. SEE PERMANENT EROSION CONTROL PRACTICES FOR SPECIFIC METHODS AND APPLICATIONS.

1. 70% VEGETATIVE COVER: ALL SOIL DISTURBING ACTIVITIES AT THE SITE HAVE BEEN COMPLETED AND ALL EXPOSED SOILS ARE STABILIZED BY A UNIFORM, LIVE PERENNIAL VEGETATIVE COVER WITH A DENSITY OF 70% OVER THE ENTIRE PERVIOUS SURFACE AREA, OR OTHER EQUIVALENT MEANS NECESSARY TO PREVENT SOIL FAILURE UNDER EROSIVE CONDITIONS. REFER TO PART IV.G.5 IF THE PROJECT IS ON AGRICULTURAL LAND.

2. FINAL CLEAN OUT OF PERMANENT STORMWATER MANAGEMENT SYSTEMS & CONVEYANCE SYSTEMS: ALL SEDIMENT MUST BE REMOVED FROM PERMANENT STORMWATER MANAGEMENT SYSTEMS, CONVEYANCE SYSTEMS, AND DITCHES MUST BE STABILIZED WITH PERMANENT COVER.

3. REMOVAL OF ALL TEMPORARY SYNTHETIC BMPS: ALL TEMPORARY SYNTHETIC AND STRUCTURAL EROSION PREVENTION AND SEDIMENT CONTROL BMPS. (SUCH AS SILT FENCE) MUST BE REMOVED ON THE PORTIONS OF THE SITE FOR WHICH THE PERMITTEE IS RESPONSIBLE. BMPS DESIGNED TO DECOMPOSE ON SITE (SUCH AS SOME COMPOST LOGS) MAY BE LEFT IN PLACE.

4. OPERATOR PROVIDES THE OWNER ALL INSPECTION AND SWPPP AMENDMENT RECORDS FOR THE PROJECT: OWNER IS RESPONSIBLE FOR KEEPING ALL RECORDS (AS DEFINED IN PART II.E.1-5) ON FILE FOR THREE YEARS AFTER SUBMITTAL OF THE NOTICE OF TERMINATION.

DATE	REVISIONS	BY
3/23/17	QUANTITIES	BR
	RECORD DRAWING	

ROSHELL ENGINEERING, LLC
6192 267 TH CT WYOMING, MN 55092
PHONE: 763.286.0521

COVENANT MEADOWS

STORM WATER POLLUTION PREVENTION PLAN
RAMSEY, MINNESOTA

I HEREBY CERTIFY THAT THIS PLAN, SPECIFICATION, OR REPORT WAS PREPARED BY ME OR UNDER MY DIRECT SUPERVISION AND THAT I AM A DULY LICENSED PROFESSIONAL ENGINEER UNDER THE LAWS OF THE STATE OF MINNESOTA.

DATE 2/2/17 REG. NO. 24019

BRENT ROSHELL

DRAWN	BR
DATE	12/19/16
SCALE	-
PROJECT	RE-32
CHECKED	BTR
APPROVED	BTR

SW2

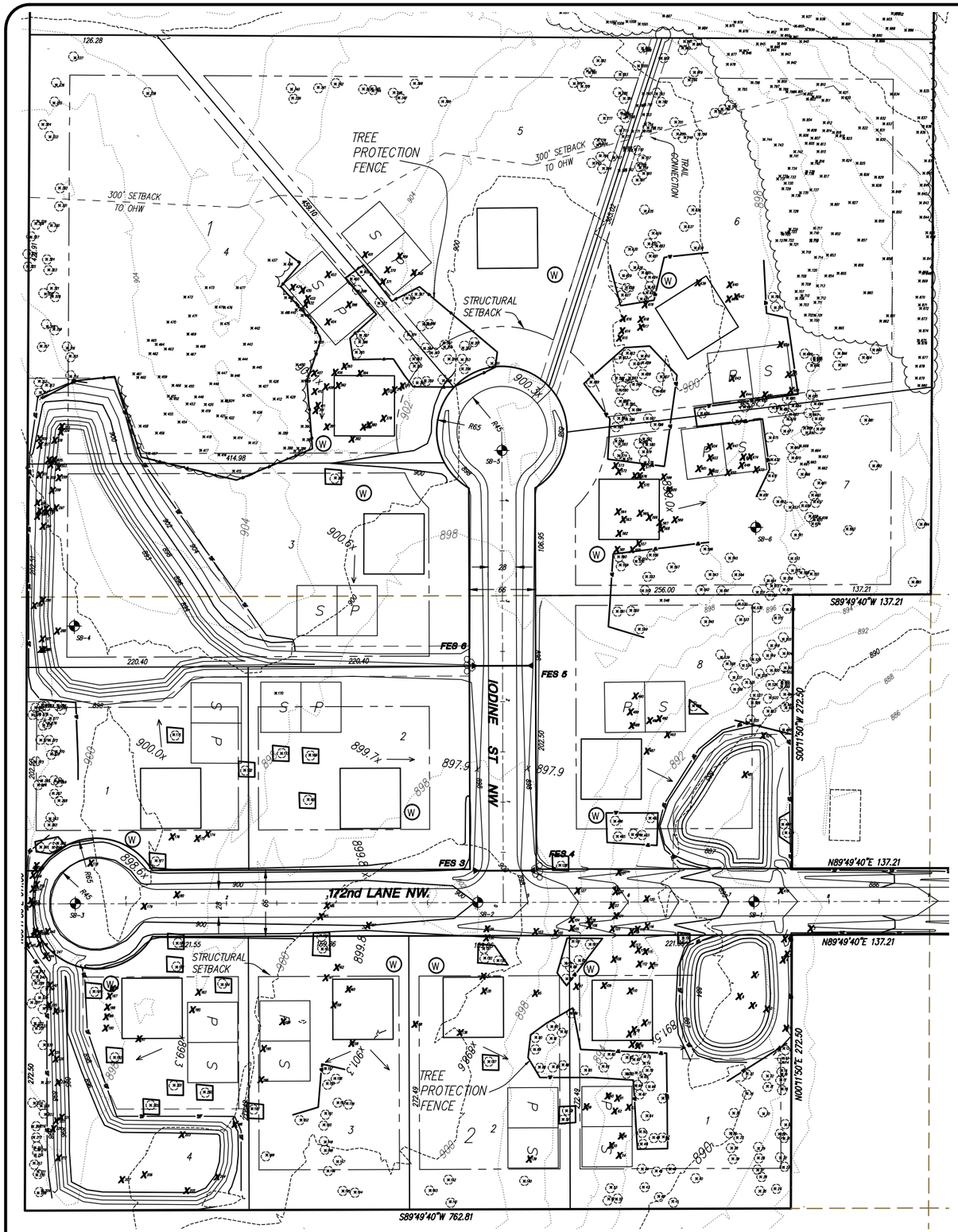

NOTE: TREES TO REMAIN SHALL BE PROTECTED FROM CONSTRUCTION ACTIVITY BY MEANS OF FENCING OR OTHER APPROVED METHOD.

TREES SAVED

12	Pine, red	13
13	Pine, red	13
14	Pine, red	9
15	Pine, red	9
16	Pine, red	8
17	Pine, red	10
18	Pine, red	12
19	Pine, red	12
20	Pine, red	11
21	Pine, red	11
22	Pine, red	10
23	Pine, red	10
24	Pine, red	16
25	Pine, red	14
26	Pine, red	13
27	Pine, red	12
28	Pine, red	14
29	Pine, red	15
30	Pine, red	15
31	Pine, red	13
32	Pine, red	16
33	Pine, red	12
34	Pine, red	6
35	Pine, red	15
36	Pine, red	18
37	Pine, red	18
38	Pine, red	16
39	Pine, red	16
40	Cedar, red	7
41	Pine, red	18
42	Pine, red	13
43	Pine, red	14
44	Pine, red	12
45	Pine, red	15
46	Pine, red	18
47	Pine, red	16
48	Pine, red	10
49	Pine, red	18
50	Pine, red	20
51	Pine, red	10
52	Pine, red	11
53	Pine, red	13
57	Pine, red	16
58	Pine, red	11
64	Pine, red	14
65	Pine, red	14
66	Pine, red	11
67	Pine, red	11
68	Pine, red	9
69	Pine, red	13
70	Pine, red	8
71	Pine, red	8
72	Pine, red	9
73	Pine, red	10
74	Pine, red	10
75	Pine, red	11
81	Pine, red	6
82	Pine, red	15
83	Pine, scotch	5
84	Pine, red	13
85	Pine, red	18
86	Pine, red	14
87	Pine, red	11
88	Pine, red	17
89	Pine, red	12
90	Pine, red	15
91	Pine, red	16
92	Pine, red	15
93	Pine, red	14
94	Pine, red	12
95	Pine, red	13
96	Pine, red	14
98	Pine, red	15
99	Pine, red	13
101	Pine, red	15
111	Pine, red	15
112	Pine, red	14
113	Pine, red	10
114	Pine, red	9
115	Pine, red	14
116	Pine, red	13
117	Pine, red	13
128	Pine, red	11
131	Pine, red	12
132	Pine, red	11
133	Pine, red	13
137	Pine, red	14
138	Cedar, red	7
140	Pine, red	11
141	Pine, red	12

142	Pine, red	11
143	Pine, red	11
144	Cedar, red	7
145	Pine, red	12
146	Pine, red	11
147	Pine, red	13
148	Pine, red	13
149	Pine, red	12
150	Pine, red	12
151	Pine, red	22
152	Pine, red	13
153	Pine, red	15
154	Pine, red	12
155	Pine, red	13
156	Pine, red	12
157	Pine, red	10
163	Pine, red	12
164	Pine, red	12
168	Pine, red	6
169	Cedar, red	7
171	Pine, red	13
172	Pine, red	11
173	Pine, red	10
177	Pine, red	13
181	Pine, red	12
184	Cedar, red	6
191	Pine, red	13
192	Pine, red	14
197	Pine, red	12
199	Pine, red	7
200	Pine, red	12
201	Pine, red	7
202	Pine, red	14
208	Pine, red	20
209	Pine, red	12
210	Pine, red	12
211	Pine, red	14
213	Pine, red	11
214	Pine, red	15
215	Pine, red	12
216	Pine, red	16
217	Pine, red	13
218	Pine, red	12
219	Pine, red	10
223	Pine, red	12
224	Pine, red	12
225	Pine, red	16
227	Pine, red	13
230	Pine, red	10
231	Pine, red	12
232	Pine, red	11
233	Pine, red	11
235	Pine, red	14
236	Pine, red	11
237	Pine, red	11
238	Pine, red	10
239	Pine, red	12
240	Pine, red	9
241	Pine, red	12
243	Pine, red	8
245	Pine, red	7
260	Pine, red	13
261	Pine, red	9
262	Pine, red	11
263	Pine, red	13
264	Pine, red	11
265	Pine, red	15
266	Pine, red	11
267	Pine, red	12
268	Pine, red	14
269	Pine, red	14
270	Cedar, red	6
271	Pine, red	16
272	Pine, red	14
273	Pine, red	10
274	Pine, red	12
275	Pine, red	10
276	Pine, red	15
277	Pine, red	11
278	Pine, red	11
279	Pine, red	9
280	Pine, red	8
281	Pine, red	14
282	Pine, red	12
283	Pine, red	10
284	Pine, red	14
289	Pine, red	12
311	Pine, red	13
312	Pine, red	13
313	Pine, red	12
314	Pine, red	13
315	Pine, red	16
316	Pine, red	14
317	Pine, red	12
318	Pine, red	11
319	Pine, red	13

320	Pine, red	13
321	Pine, red	18
322	Pine, red	10
323	Pine, red	12
324	Pine, red	12
325	Pine, red	9
326	Pine, white	16
327	Pine, red	11
328	Pine, red	8
329	Pine, red	9
330	Pine, red	9
331	Pine, red	12
332	Pine, red	10
333	Pine, red	6
334	Pine, red	15
335	Pine, red	16
336	Pine, red	9
337	Pine, red	13
338	Pine, red	9
339	Pine, red	16
340	Pine, red	14
341	Pine, red	19
342	Pine, red	15
343	Pine, red	13
344	Pine, red	14
345	Pine, red	13
346	Pine, red	12
347	Pine, red	13
348	Pine, red	15
349	Pine, red	11
351	Pine, red	9
351	Pine, red	7
352	Oak, red	6
353	Oak, red	8
354	Oak, red	7
355	Oak, red	9
356	Oak, red	7
357	Oak, bur	23
358	Oak, red	10
359	Oak, red	22
360	Oak, red	5
361	Oak, red	23
362	Oak, red	14
363	Oak, red	13
364	Oak, red	4
365	Oak, red	25
366	Oak, bur	6
367	Oak, red	36
372	Oak, red	12
373	Oak, red	29
374	Oak, red	32
383	Pine, scotch	15
385	Oak, red	21
386	Oak, red	5
387	Oak, red	4
388	Oak, red	7
389	Oak, red	5
390	Oak, red	34
395	Oak, red	35
396	Oak, red	11
397	Oak, red	11
399	Oak, red	22
400	Oak, red	42
402	Oak, red	7
405	Oak, red	35
407	Oak, red	20
409	Oak, red	12
410	Oak, red	8
412	Oak, red	21
413	Oak, red	32
414	Oak, red	36
415	Oak, red	24
416	Oak, red	4
417	Oak, red	5
418	Oak, red	4
419	Oak, red	7
420	Oak, red	6
421	Oak, red	4
422	Oak, red	4
423	Oak, red	6
424	Oak, red	4
425	Oak, red	9
426	Oak, red	13
427	Oak, red	8
428	Oak, red	11
429	Oak, red	36
430	Oak, red	27
431	Oak, red	14
436	Oak, red	33
437	Oak, red	5
438	Oak, red	16
439	Oak, red	9
440	Oak, red	9
441	Oak, red	15
442	Oak, red	36
443	Oak, red	12

444	Oak, red	23
445	Oak, red	36
446	Oak, red	16
447	Oak, red	35
448	Oak, red	14
449	Oak, red	6
450	Oak, red	15
451	Oak, red	7
452	Oak, red	5
453	Oak, red	5
454	Oak, red	5
455	Oak, red	7
456	Oak, red	40
457	Oak, red	7
458	Cedar, red	9
459	Oak, red	6
460	Oak, red	10
461	Oak, red	6
462	Oak, red	27
463	Oak, red	38
464	Oak, red	12
465	Oak, red	14
466	Oak, red	5
467	Oak, red	21
468	Oak, red	24
469	Oak, red	15
470	Oak, red	7
471	Oak, red	9
472	Oak, red	7
473	Oak, red	5
474	Oak, red	42
475	Oak, red	20
476	Oak, red	24
477	Oak, red	35
479	Pine, red	11
480	Pine, red	13
482	Pine, red	12
483	Pine, red	7
484	Pine, red	10
485	Pine, red	16
486	Pine, red	12
494	Pine, red	11
495	Pine, red	15
496	Pine, red	15
497	Pine, red	10
498	Pine, red	9
499	Pine, red	8
500	Pine, red	8
501	Pine, red	10
502	Pine, red	9
503	Pine, red	9
504	Pine, red	8
505	Pine, red	15
506	Pine, red	11
507	Pine, red	10
508	Pine, red	12
509	Pine, red	11
510	Pine, red	13
511	Pine, red	12
512	Pine, red	12
513	Pine, red	11
514	Pine, red	12
515	Pine, red	13
516	Pine, red	12
517	Pine, red	15
518	Pine, red	13
519	Pine, red	12
520	Pine, red	11
521	Pine, red	9
522	Pine, red	11
523	Pine, red	12
525	Pine, red	15
526	Pine, red	12
527	Pine, red	12
528	Pine, red	13
529	Pine, red	14
530	Pine, red	13
531	Pine, red	13
532	Pine, red	14
533	Pine, red	15
534	Pine, red	14
535	Pine, red	12
536	Pine, red	15
537	Pine, red	13
538	Pine, red	15
539	Pine, red	11
540	Pine, red	15
541	Pine, red	13
542	Pine, red	12
543	Pine, red	14
544	Pine, red	13
545	Pine, red	16
546	Pine, red	12
547	Pine, red	14
548	Pine, red	17
549	Pine, red	12

N
W E
S

GRAPHIC SCALE

60 0 30 60 120

(IN FEET)

LINE TYPE & SYMBOL LEGEND

- FLARED END SECTION
- STORM SEWER
- SB-5 — DENOTES SOIL BORING
- P / S — DRAIN FIELD LOC P = PRIMARY S = SECONDARY
- W — PROPOSED WELL LOC.
- EXIST TREE LINE
- TF — TREE FENCE
- SF — SILT FENCE
- PROPOSED CONTOUR
- EXIST CONTOUR
- SETBACK
- EASEMENT
- LOT LINE
- R/W
- EDGE OF BITUMINOUS
- CENTERLINE

TREE PROTECTION FENCE SHALL BE INSTALLED AND THE LOCATION APPROVED BY THE CITY BEFORE COMMENCEMENT OF OTHER WORK, INCLUDING SILT FENCE INSTALLATION.

AN ARBORIST SHALL BE CONSULTED TO DEVELOP A PLAN TO PROTECT EXISTING OAK TREES FROM OAK WILT.

ANY CLEARING OF OAK TREES SHALL BE PERFORMED PRIOR TO APRIL 15TH OR AFTER JULY 15TH TO MINIMIZE EXPOSURE OR INTRODUCTION OF OAK WILT.

DATE	REVISIONS	BY
3/23/17	TREE FENCE	BR

RECORD DRAWING

ROSHELL ENGINEERING, LLC
6192 267 TH CT WYOMING, MN 55092
PHONE: 763.286.0521

COVENANT MEADOWS

TREE PLAN

RAMSEY, MINNESOTA

I HEREBY CERTIFY THAT THIS PLAN, SPECIFICATION, OR REPORT WAS PREPARED BY ME OR UNDER MY DIRECT SUPERVISION AND THAT I AM A DULY LICENSED PROFESSIONAL ENGINEER UNDER THE LAWS OF THE STATE OF MINNESOTA.

DATE 2/2/17 REG. NO. 24019

BRENT ROSHELL

DRAWN	BR
DATE	2/2/17
SCALE	AS SHOWN
PROJECT	RE-32
CHECKED	BTR
APPROVED	BTR

T1

TREES SAVED

550	Pine, red	14
551	Pine, red	11
552	Pine, red	15
553	Cedar, red	6
554	Pine, red	12
555	Pine, red	9
556	Pine, red	9
559	Pine, red	9
560	Pine, red	10
574	Pine, red	11
575	Pine, red	13
576	Pine, red	11
579	Pine, red	10
580	Pine, red	9
581	Pine, red	7
582	Pine, red	12
583	Pine, red	13
584	Pine, red	13
585	Pine, red	10
586	Pine, red	10
587	Pine, red	8
588	Pine, red	9
589	Pine, red	12
590	Pine, red	9
591	Pine, red	9
592	Pine, red	8
593	Pine, red	9
594	Pine, red	6
595	Pine, red	10
596	Pine, red	8
597	Pine, red	11
598	Pine, red	18
605	Pine, red	13
606	Pine, red	14
607	Pine, red	13
608	Pine, red	11
609	Pine, red	11
610	Pine, red	13
611	Pine, red	11
612	Pine, red	12
613	Pine, red	10
621	Pine, red	11
622	Pine, red	10
623	Pine, red	12
624	Pine, red	9
625	Pine, red	12
626	Pine, red	11
627	Pine, red	9
628	Pine, red	11
629	Pine, red	11
630	Pine, red	11
631	Pine, red	11
632	Pine, red	12
633	Pine, red	8
634	Pine, red	13
635	Pine, red	9
636	Pine, red	15
637	Pine, red	12
638	Pine, red	13
645	Pine, red	16
646	Pine, red	13
651	Pine, red	11
652	Pine, red	15
653	Pine, red	13
654	Pine, red	11
655	Pine, red	11
656	Pine, red	10
657	Pine, red	10
658	Pine, red	10
659	Pine, red	10
660	Pine, red	9
661	Pine, red	11
662	Pine, red	12
663	Pine, red	13
664	Pine, red	15
665	Pine, red	13
666	Pine, red	11
667	Pine, red	12
668	Pine, red	10
669	Pine, red	9
670	Pine, red	12
671	Pine, red	16

672	Pine, red	15
675	Pine, red	11
677	Pine, red	17
678	Pine, red	12
679	Pine, red	12
680	Pine, red	11
682	Pine, red	10
683	Pine, red	12
684	Pine, red	8
685	Pine, red	13
689	Pine, red	12
690	Pine, red	12
691	Pine, red	14
692	Pine, red	13
693	Pine, red	13
694	Pine, red	15
695	Pine, red	12
696	Pine, red	14
697	Pine, red	14
698	Pine, red	16
699	Pine, red	12
700	Pine, red	17
701	Pine, red	10
702	Pine, red	16
703	Pine, red	14
704	Pine, red	13
705	Pine, red	8
706	Pine, red	12
707	Pine, red	12
708	Pine, red	10
709	Pine, red	9
710	Pine, red	10
711	Pine, red	16
712	Pine, red	12
713	Pine, red	10
714	Pine, red	13
715	Pine, red	9
716	Pine, red	9
717	Pine, red	11
718	Pine, red	14
719	Pine, red	11
720	Pine, red	13
721	Pine, red	13
722	Pine, red	7
723	Pine, red	12
724	Pine, red	12
725	Pine, red	11
726	Pine, red	13
727	Pine, red	14
728	Pine, red	14
729	Pine, red	13
730	Pine, red	11
731	Pine, red	14
732	Pine, red	8
733	Pine, red	10
734	Pine, red	12
735	Pine, red	15
736	Pine, red	17
737	Pine, red	11
738	Pine, red	15
739	Pine, red	9
740	Pine, red	6
741	Pine, red	12
742	Pine, red	15
743	Pine, red	16
744	Pine, red	13
745	Pine, red	11
746	Pine, red	10
747	Pine, red	20
748	Pine, red	17
749	Pine, red	16
750	Pine, red	14
751	Pine, red	15
752	Pine, red	20
754	Pine, red	8
755	Pine, red	9
756	Pine, red	12
757	Pine, red	11
758	Pine, red	10
759	Pine, red	12
760	Pine, red	13
761	Pine, red	16
764	Pine, red	11
765	Pine, red	10
766	Pine, red	13
767	Pine, red	12
770	Pine, red	12
773	Pine, red	11
774	Pine, red	13
775	Pine, red	19
776	Pine, red	15
777	Pine, red	14
778	Pine, red	14
779	Pine, red	18
780	Pine, red	23
781	Pine, red	12

782	Cedar, red	9
783	Pine, red	14
784	Pine, red	16
785	Pine, red	16
786	Pine, red	9
787	Pine, red	14
788	Pine, red	10
792	Pine, red	14
793	Pine, red	26
794	Cedar, red	7
795	Pine, red	17
796	Pine, red	18
797	Pine, red	12
798	Pine, red	20
799	Pine, red	11
800	Pine, red	16
801	Pine, red	17
802	Pine, red	14
803	Pine, red	14
804	Pine, red	14
805	Pine, red	13
806	Pine, red	15
807	Pine, red	10
808	Pine, red	12
809	Pine, red	8
810	Pine, red	10
811	Pine, red	15
812	Pine, red	13
813	Pine, red	14
814	Pine, red	11
815	Pine, red	11
816	Pine, red	10
817	Pine, red	13
818	Pine, red	12
819	Pine, red	15
820	Pine, red	16
821	Pine, red	14
822	Pine, red	19
823	Pine, red	16
824	Pine, red	19
825	Pine, red	14
826	Pine, red	19
827	Cedar, red	8
828	Pine, red	16
829	Pine, red	16
830	Pine, red	18
831	Pine, red	12
832	Pine, red	14
833	Pine, red	15
834	Pine, red	14
835	Pine, red	15
836	Pine, red	11
837	Pine, red	14
838	Pine, red	9
839	Pine, red	14
840	Pine, red	16
841	Pine, red	9
842	Pine, red	9
843	Pine, red	15
844	Pine, red	12
845	Pine, red	10
846	Pine, red	8
847	Pine, red	13
848	Pine, red	11
849	Pine, red	19
850	Pine, red	14
851	Pine, red	16
852	Pine, red	11
853	Pine, red	15
854	Pine, red	13
855	Pine, red	14
856	Pine, red	15
857	Pine, red	12
858	Pine, red	16
859	Pine, red	14
860	Cedar, red	6
861	Pine, red	12
862	Pine, red	13
863	Pine, red	15
864	Pine, red	11
865	Cedar, red	7
866	Pine, red	13
867	Pine, red	14
868	Pine, red	12
869	Pine, red	10
870	Pine, red	16
871	Pine, red	7
872	Pine, red	13
873	Pine, red	14
874	Pine, red	11
875	Pine, red	12
876	Pine, red	13
877	Pine, red	13
878	Pine, red	11
879	Pine, red	14
880	Pine, red	18

881	Pine, red	12
882	Pine, red	12
883	Pine, red	9
884	Pine, red	13
885	Oak, red	21
886	Oak, bur	16
887	Basswood	12
888	Aspen	13
889	Aspen	8
890	Aspen	13
891	Ash, green	23
892	Aspen	10
893	Oak, red	17
894	Aspen	9
895	Aspen	10
896	Aspen	8
897	Aspen	12
898	Aspen	10
899	Aspen	8
900	Aspen	13
901	Aspen	10
902	Aspen	9
903	Aspen	13
904	Aspen	8
905	Aspen	10
906	Aspen	14
907	Aspen	13
908	Oak, red	16
909	Aspen	9
910	Aspen	9
911	Aspen	11
912	Aspen	13
913	Cherry, black	16
914	Aspen	9
915	Aspen	18
916	Ash, green	14
917	Basswood	8
918	Basswood	8
919	Aspen	13
920	Aspen	10
921	Aspen	11
922	Aspen	9
923	Aspen	14
924	Aspen	12
925	Aspen	8
926	Aspen	8
927	Ash, green	9
928	Aspen	8
929	Aspen	9
930	Aspen	9
931	Aspen	10
932	Aspen	8
933	Oak, red	19
934	Aspen	9
935	Aspen	8
936	Aspen	9
937	Oak, red	8
938	Oak, red	12
939	Ash, green	12
940	Oak, red	8
941	Oak, bur	7
942	Oak, red	7
943	Oak, red	6
944	Oak, bur	6
945	Oak, bur	5
946	Oak, red	4
947	Oak, bur	5
948	Oak, red	7
949	Oak, red	7
950	Oak, red	7
951	Ash, green	13
952	Oak, red	14
953	Oak, red	12
954	Aspen	9
955	Oak, red	8
956	Aspen	9
957	Aspen	11
958	Aspen	8
959	Aspen	8
960	Aspen	12
961	Aspen	12
962	Oak, red	7
963	Aspen	14
964	Oak, red	25
965	Oak, bur	7
966	Oak, red	33
967	Oak, red	22
968	Oak, bur	15
969	Oak, red	12
970	Oak, red	22
971	Oak, red	24
972	Oak, red	18
973	Oak, red	17
974	Oak, red	50
975	Oak, red	15
976	Oak, bur	16
977	Oak, bur	7
978	Basswood	10
979	Oak, red	5
980	Oak, red	12
981	Oak, red	5

982	Oak, red	7
983	Oak, red	16
984	Oak, red	20
985	Oak, red	20
986	Oak, red	17
987	Oak, red	15
988	Oak, red	16
989	Oak, red	15
990	Oak, red	13
991	Oak, red	14
992	Oak, red	14
993	Oak, red	24
994	Oak, white	17
995	Basswood	8
996	Oak, red	28
997	Oak, red	40
998	Oak, red	6
999	Cedar, red	13
1000	Oak, red	10
1001	Oak, red	38
1002	Cedar, red	8
1003	Basswood	18
1004	Basswood	13
1005	Basswood	9
1006	Ash, green	10
1007	Oak, red	21
1008	Oak, red	14
1009	Ash, green	15
1010	Oak, red	9
1011	Oak, red	24
		10078

TREES REMOVED HOME CONST

54	Pine, red	15
55	Pine, red	13
56	Pine, red	12
59	Pine, red	20
60	Pine, red	12
61	Pine, red	7
62	Pine, red	12
63	Pine, red	11
76	Pine, red	12
77	Pine, red	14
78	Pine, red	14
79	Pine, red	12
80	Pine, red	13
97	Pine, red	21
107	Pine, red	15
108	Pine, red	18
109	Cedar, red	7
110	Pine, red	13
134	Pine, red	15
135	Pine, red	15
136	Pine, red	15
139	Pine, red	13
158	Pine, red	12
159	Pine, red	13
160	Pine, red	13
161	Pine, red	13
162	Pine, red	14
170	Pine, red	12
174	Pine, red	8
175	Pine, red	10
176	Pine, red	13
182	Cedar, red	8
183	Pine, red	9
185	Pine, red	13
186	Pine, red	12
187	Pine, red	14
188	Pine, red	11
189	Pine, red	15
190	Pine, red	12
193	Pine, red	14
194	Pine, red	10
195	Pine, red	13
196	Pine, red	14
368	Oak, red	6
369	Oak, red	7
370	Oak, red	23
371	Oak, red	24
375	Oak, red	6
376	Oak, red	4
377	Oak, red	4
378	Oak, red	7
380	Oak, red	32
381	Oak, red	24
382	Oak, red	27
384	Oak, red	40
391	Oak, red	30
392	Oak, red	37
393	Oak, red	27
394	Oak, red	17
398	Oak, red	54
401	Oak, red	7
403	Oak, red	32
404	Oak, red	17
406	Oak, red	17
408	Oak, red	11
411	Oak, red	21
432	Oak, red	18
433	Oak, red	24
434	Oak, red	27
435	Oak, red	25
487	Pine, red	11
488	Pine, red	11
489	Pine, red	9
490	Pine, red	11
491	Pine, red	11
492	Pine, red	13
493	Pine, red	20
557	Pine, red	8
558	Pine, red	12
561	Pine, red	10
562	Pine, red	12
563	Pine, red	12
564	Pine, red	12
565	Pine, red	14
566	Pine, red	8
567	Pine, red	12
568	Pine, red	15
569	Pine, red	17
570	Pine, red	14
571	Pine, red	14
572	Pine, red	12
573	Pine, red	11
577	Pine, red	9
578	Pine, red	9
599	Pine, red	12
600	Pine, red	16

601	Pine, red	17
602	Pine, red	14
603	Pine, red	8
604	Pine, red	13
614	Pine, red	8
615	Pine, red	9
616	Pine, red	11
617	Pine, red	11
618	Pine, red	11
619	Pine, red	12
639	Pine, red	7
640	Pine, red	12
641	Pine, red	12
642	Pine, red	10
643	Pine, red	13
644	Pine, red	11
647	Pine, red	11
648	Pine, red	15
649	Pine, red	10
650	Pine, red	12
673	Pine, red	12
674	Pine, red	12
681	Pine, red	11
686	Pine, red	14
687	Pine, red	13
688	Pine, red	14
		1738

TREES REMOVED POND CONST

5	Pine, red	14
6	Pine, red	13
7	Pine, red	12
8	Pine, red	18
9	Pine, red	14
10	Pine, red	13
11	Pine, red	16
198	Pine, red	13
203	Pine, red	15
204	Cedar, red	6
205	Pine, red	9
206	Pine, red	22
207	Pine, red	11
212	Pine, red	17
220	Pine, red	13
221	Pine, red	16
222	Pine, red	12
226	Pine, red	14
228	Pine, red	12
229	Pine, red	12
234	Pine, red	15
242	Pine, red	12
285	Pine, red	8
286	Pine, red	8
287	Pine, red	8
288	Pine, red	8
289	Pine, red	12
290	Pine, red	12
291	Pine, red	12
292	Pine, red	14
293	Pine, red	8
294	Pine, red	8
295	Pine, red	10
296	Pine, red	14
297	Pine, red	12
298	Pine, red	15
299	Pine, red	12
300	Pine, red	12
301	Pine, red	12
302	Pine, red	12
303	Pine, red	11
304	Pine, red	10
305	Pine, red	13
306	Pine, red	13
307	Pine, red	12
308	Pine, red	16
309	Pine, red	12
310	Pine, red	15
481	Pine, red	12
524	Pine, red	13
		623

TREES REMOVED ROAD CONST

1	Pine, red	10
2	Pine, red	17
3	Pine, red	14
4	Pine, red	12
102	Pine, red	18
103	Pine, red	13
104	Pine, red	13
105	Pine, red	16
106	Pine, red	14
116	Pine, red	13
118	Pine, red	12
119	Pine, red	13
120	Pine, red	12
121	Pine, red	10
122	Pine, red	12
123	Pine, red	13
124	Pine, red	11
125	Pine, red	15
126	Pine, red	19
127	Pine, scotch	11
129	Pine, red	8
130	Pine, red	9
165	Pine, red	12
166	Pine, red	11
167	Cedar, red	6
178	Pine, red	13
179	Pine, red	21
180	Pine, red	11
244	Pine, red	11
246	Pine, red	10
247	Pine, red	12
248	Pine, red	13
249	Pine, red	14
250	Pine, red	12
251	Pine, red	12
252	Pine, red	10
253	Pine, red	12
254	Pine, red	8
255	Pine, red	14
256	Pine, red	10
257	Pine, red	12
258	Pine, red	12
259	Pine, red	12
478	Pine, red	12
		545

TREES REMOVED TRAIL CONST

753	Pine, red	12
762	Pine, red	15
763	Pine, red	11
768	Pine, red	9
769	Pine, red	9
771	Pine, red	10
772	Pine, red	10
789	Pine, red	13
790	Pine, red	15
791	Pine, red	12
		116

DATE	REVISIONS	BY
3/23/17	TREE REMOVAL FOR TRAIL	BR

RECORD DRAWING

ROSHELL ENGINEERING, LLC
6192 267 TH CT WYOMING, MN 55092
PHONE: 763.286.0521

COVENANT MEADOWS

TREE PLAN

RAMSEY, MINNESOTA

I HEREBY CERTIFY THAT THIS PLAN, SPECIFICATION, OR REPORT WAS PREPARED BY ME OR UNDER MY DIRECT SUPERVISION AND THAT I AM A DULY LICENSED PROFESSIONAL ENGINEER UNDER THE LAWS OF THE STATE OF MINNESOTA.

DATE 2/2/17 REG. NO. 24019

BRENT ROSHELL

DRAWN	BR
DATE	2/2/17
SCALE	AS SHOWN
PROJECT	RE-32
CHECKED	BTR
APPROVED	BTR

T2