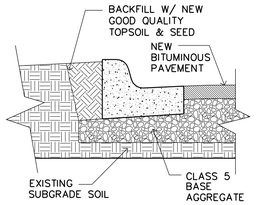

7 A1 B6-12 CONCRETE CURB
SCALE: 1/2" = 1'-0"

6 A1 NO PARKING SIGN
SCALE: 1" = 1'-0"

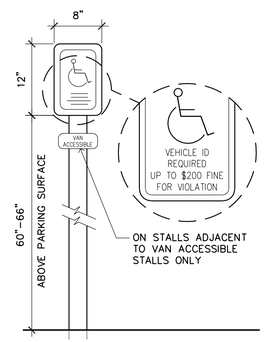

5 A1 ACCESSIBLE PARKING SIGN
1" = 1'-0"

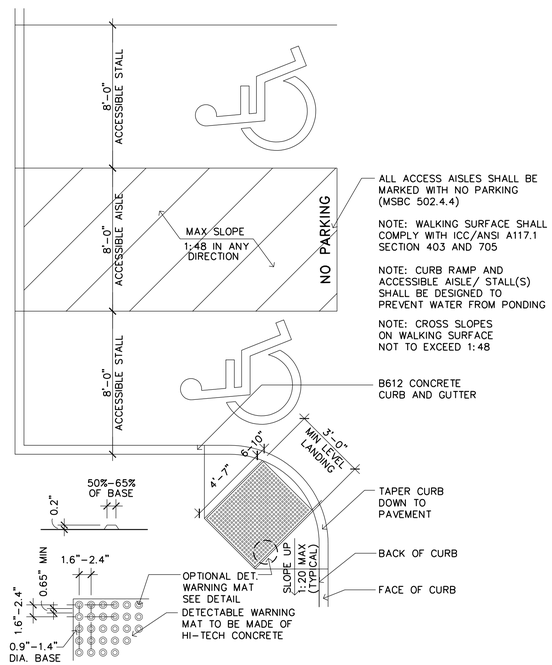

4 A1 ACCESSIBLE CURB CUT DETAIL
SCALE: 1/4" = 1'-0"

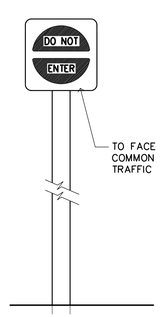

3 A1 DO NOT ENTER SIGN
1" = 1'-0"

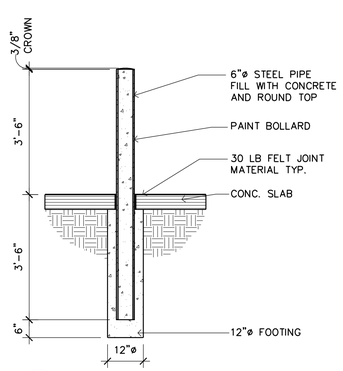

2 A1 CONCRETE BOLLARD
SCALE: 1/2" = 1'-0"

SITE DATA

LOT SIZE – 100,034 S.F. = 2.30 ACRES
VACATED RIGHT OF WAY – ±9,467 S.F. = 0.22 ACRES
ZONING – COR 2
BUILDINGS
RETAIL MALL – 15,152 S.F.
QUICK SERVE RESTAURANT – 3,600 S.F.

PARKING DATA

MINIMUM REQUIREMENT
RETAIL
15,152 S.F. AT 2/1,000 = 30 STALLS
RESTAURANT
3,600 S.F. AT 3/1,000 = 11 STALLS
41 STALLS MINIMUM

MAXIMUM REQUIREMENT
RETAIL
15,152 S.F. AT 4/1,000 = 61 STALLS
RESTAURANT
3,600 S.F. AT 5/1,000 = 18 STALLS
79 STALLS MAXIMUM

54 STALLS PROVIDED

24 FUTURE STALLS

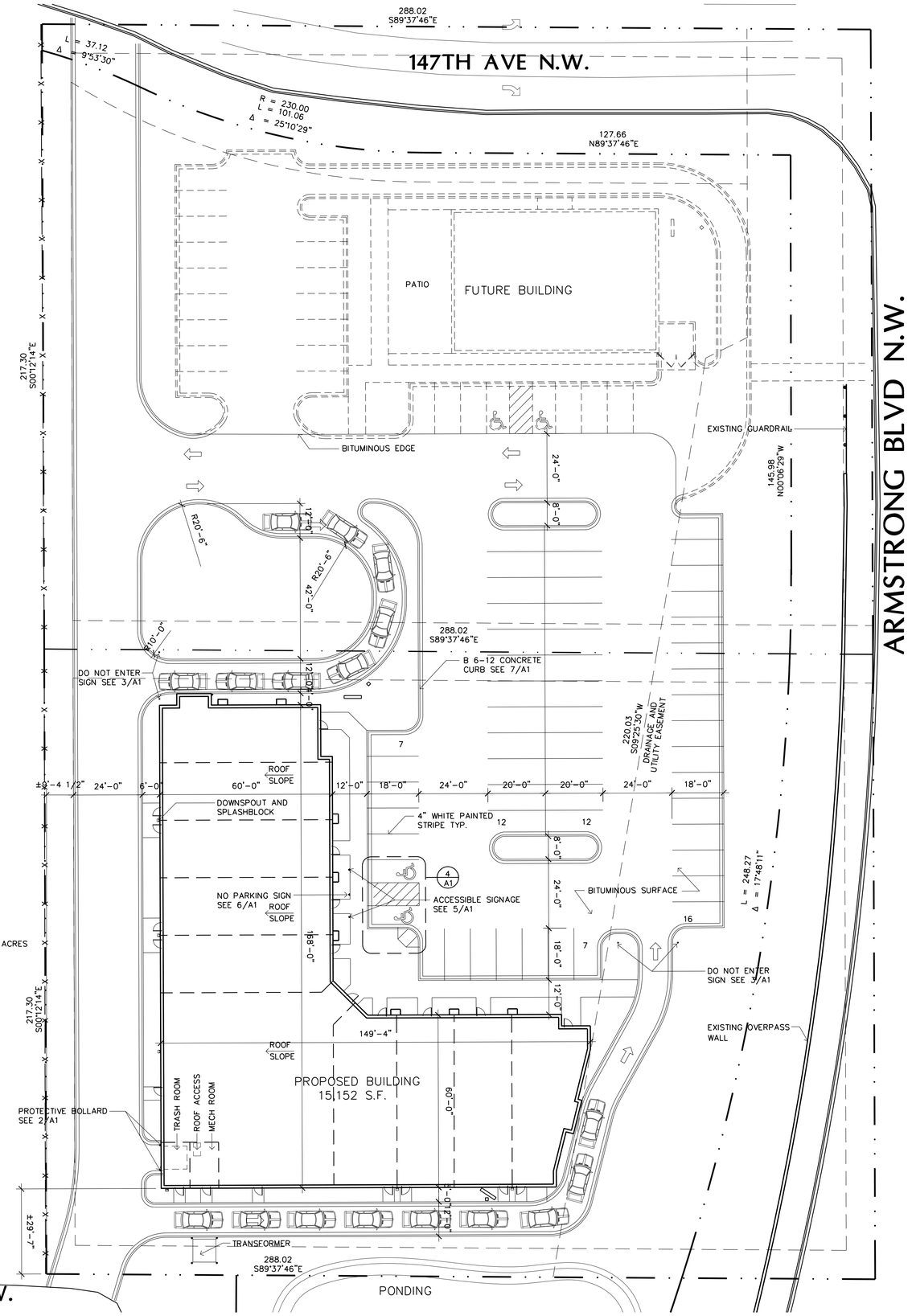

1 A1 SITE PLAN
SCALE: 1" = 20'-0"

NORTH

Filename: ARMSTRONG RETAIL\ARMSTRONG RETAIL-A1

LAMPERT ARCHITECTS
420 Summit Avenue
St. Paul, MN 55102
Phone:763.755.1211 Fax:763.757.2849
lampert@lampert-arch.com

ARCHITECT CERTIFICATION:
I HEREBY CERTIFY THAT THIS PLAN, SPECIFICATION OR REPORT WAS PREPARED BY ME OR UNDER MY DIRECT SUPERVISION AND THAT I AM A DULY LICENSED ARCHITECT UNDER THE LAWS OF THE STATE OF MINNESOTA.

PRELIMINARY NOT FOR CONSTRUCTION

SIGNATURE
LEONARD LAMPERT
PRINTED NAME
13669
LICENSE NO.
04/01/00
DATE

ARMSTRONG RETAIL
Ramsey, Minnesota

Copyright 2019
Leonard Lampert Architects Inc.

Project Designer: JAMES B
Drawn By: JRB
Checked By: LL
Revisions

3/20/19	PRELIMINARY

SITE PLAN DETAILS

Sheet Number

A1

Project No. 190205-2