GENERAL NOTES:

1. SILT FENCE/TREE PROTECTION FENCE SHALL BE IN PLACE PRIOR TO THE START OF ANY REMOVAL ACTIVITIES. SEE THE GRADING, DRAINAGE AND EROSION CONTROL PLAN FOR SILT FENCE LOCATIONS.
2. CLEARING OF ANY OAK TREES SHALL NOT OCCUR PRIOR TO JULY 15TH. IF OAK TREE CLEARING IS NECESSARY PRIOR TO JULY 15TH, AN OAK WILT MANAGEMENT PLAN MUST BE PREPARED AND SUBMITTED TO THE CITY FOR REVIEW TO ENSURE ADEQUATE MEASURES ARE IMPLEMENTED TO PROTECT FROM THE INTRODUCTION OF OAK WILT.
3. CLEAR AND GRUB BRUSH, SHRUBS AND SMALL TREES WITHIN THE CONSTRUCTION LIMITS (NOT SHOWN).
4. CONTRACTOR SHALL PREPARE A TRAFFIC CONTROL PLAN FOR THE WORK IN SUNWOOD DRIVE. PLAN SHALL BE SUBMITTED TO THE CITY OF RAMSEY A MINIMUM OF 7 DAYS PRIOR TO CONSTRUCTION.

REFERENCE NOTES:

① FENCE MATERIAL SHALL MEET THE REQUIREMENTS OF MN/DOT SPEC. 2572.2.B. FENCE SHALL BE INSTALLED PER MN/DOT SPEC. 2572.3.A.1.

② ONLY THE SIGNIFICANT TREES, AS DEFINED BY THE CITY OF RAMSEY, ARE NUMBERED. SEE SHEET C2 FOR THE SIGNIFICANT TREE INVENTORY TABULATION.

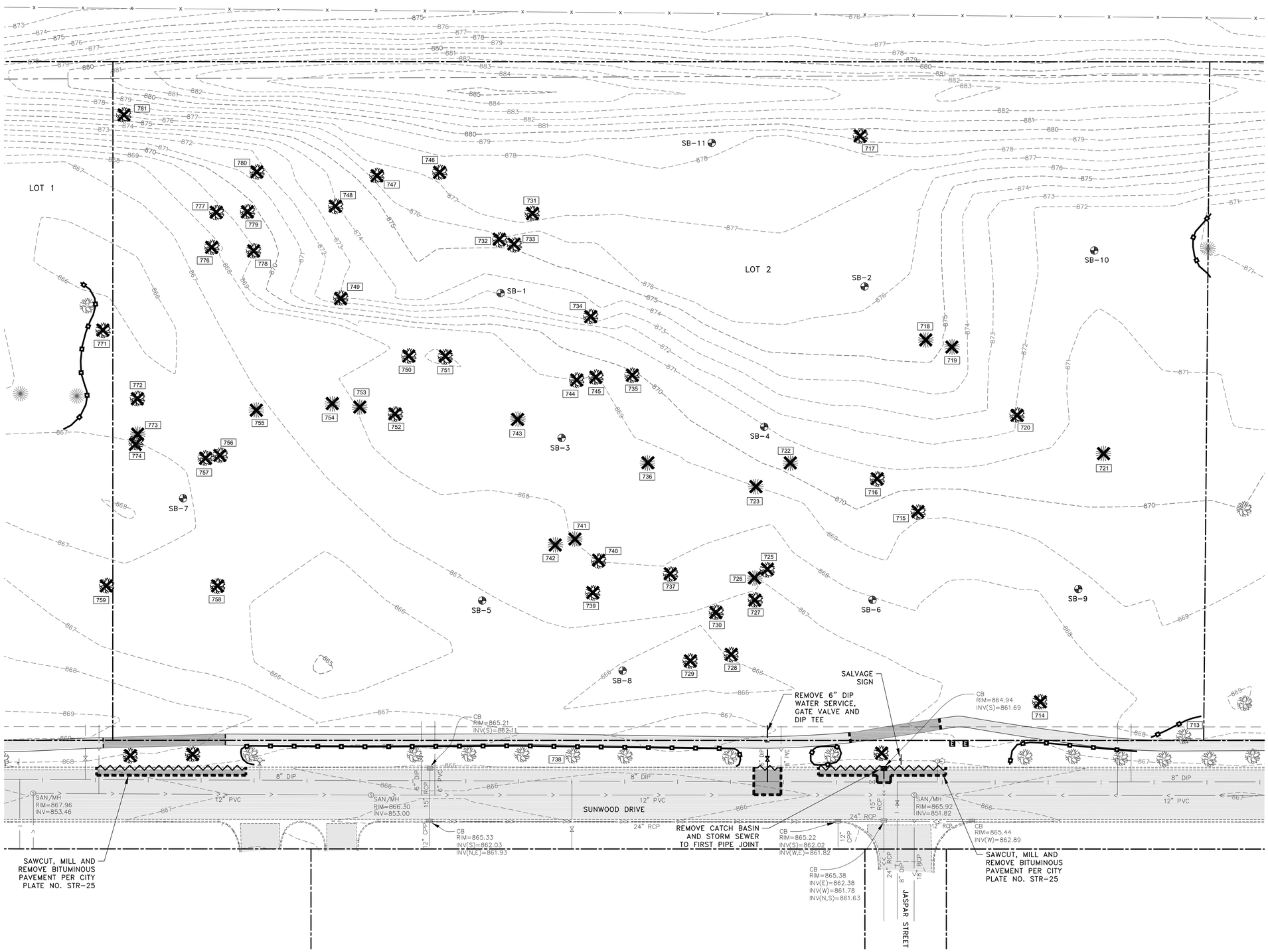

LEGEND

- PROPERTY LINE
- EASEMENT LINE
- SECTION LINE
- EXISTING CONTOUR
- EXISTING CONCRETE CURB
- GAS MAIN
- BURIED ELECTRIC LINE
- BURIED TELEPHONE LINE
- BURIED TELEVISION LINE
- BURIED FIBER OPTIC LINE
- EXISTING WATERMAIN
- EXISTING SANITARY SEWER
- EXISTING STORM SEWER
- FENCE
- EXISTING SANITARY SEWER MANHOLE
- EXISTING STORM SEWER MANHOLE
- EXISTING CATCH BASIN
- EXISTING WATERMAIN VALVE
- EXISTING HYDRANT
- LIGHT POLE
- SIGN
- DECIDUOUS AND CONIFEROUS TREES
- SB-X APPROXIMATE SOIL BORING LOCATION
- EXISTING BITUMINOUS PAVEMENT
- REMOVE BITUMINOUS PAVEMENT
- CLEAR AND GRUB TREES
- REMOVE CONCRETE CURB
- SAWCUT BITUMINOUS PAVEMENT
- TREE PROTECTION FENCE ①
- XXX TREE NUMBER ②

N

30 0 30 60
SCALE IN FEET

DATE	REVISION	DATE	REVISION

I hereby certify that this plan, specification, or report was prepared by me or under my direct supervision and that I am a duly Licensed Professional Engineer under the laws of the State of Minnesota.

TIMOTHY A. EGGERICHS, P.E.

Date 6/18/21 Lic. No. 43362

DESIGNED BY: TAE
DRAWN BY: TAE
CHECKED BY: CJJ

Hakanson Anderson
Civil Engineers and Land Surveyors
3601 Thurston Ave., Anoka, Minnesota 55303
763-427-5860 FAX 763-427-0520
www.hakanson-anderson.com

LOT 1, BLOCK 1
KNOLL PROPERTIES SECOND ADDITION

EXISTING TOPOGRAPHY AND REMOVALS PLAN

CITY OF RAMSEY, MINNESOTA

SHEET C5 OF C10 SHEETS

3395.12

Jun 18, 2021 - 8:50am
K:\PRIVATE\3395.12\ENGINEERING\339512_EXISTING.dwg

GENERAL CONSTRUCTION AND SOILS NOTES:

1. STRIP ALL INPLACE TOPSOIL IN AREAS TO BE DISTURBED BY CONSTRUCTION AND REUSE AS SLOPE DRESSING. IN AREAS OF PARKING LOT AND BUILDING CONSTRUCTION, THE EXPOSED SAND SHALL BE SURFACE COMPACTED TO AT LEAST 100% OF THE STANDARD PROCTOR MAXIMUM DRY DENSITY, ASTM D698, IN AT LEAST THE UPPER 3 FEET.
2. UNLESS OTHERWISE RECOMMENDED IN THESE PLANS, THE GRADING SUBGRADE SHALL BE CONSTRUCTED OF SUITABLE GRADING MATERIAL. THE FILL SHALL BE PLACED IN 8'' TO 10'' LOOSE LIFTS, AND COMPACTED TO 100% OF THE STANDARD PROCTOR MAXIMUM DRY DENSITY.
3. SUITABLE GRADING MATERIAL FOR THIS PROJECT SHALL CONSIST OF ALL SOILS ENCOUNTERED WITH THE EXCEPTION OF TOPSOIL, SILT, DEBRIS, ORGANIC MATERIAL AND OTHER UNSTABLE MATERIAL.
4. CONTRACTOR SHALL REVIEW THE REPORT OF GEOTECHNICAL EXPLORATION PREPARED BY AMERICAN ENGINEERING TESTING, INC. AND DATED APRIL 26, 2021 FOR ADDITIONAL SITE PREPARATION REQUIREMENTS.
5. PROVIDE A SAW CUT WHEN PLACING NEW PAVEMENT ADJACENT TO INPLACE PAVEMENT AND AT TERMINI OF CONSTRUCTION TO ENSURE A UNIFORM JOINT.
6. BITUMINOUS AND CONCRETE ITEMS DISTURBED BY CONSTRUCTION SHALL BECOME THE PROPERTY OF THE CONTRACTOR AND SHALL BE DISPOSED OF IN ACCORDANCE WITH MN/DOT SPEC. 2104.
7. USE TACK COAT BETWEEN ALL BITUMINOUS MIXTURES. THE BITUMINOUS TACK COAT MATERIAL SHALL BE APPLIED AT A UNIFORM RATE OF 0.04 GAL/SY TO 0.06 GAL/SY BETWEEN BITUMINOUS LAYERS. THE APPLICATION RATES ARE FOR UNDILUTED EMULSIONS.
8. THE BITUMINOUS MIXTURES SHALL MEET THE REQUIREMENTS OF SPECIFICATIONS 2360 AND 3139.
9. CONTRACTOR SHALL APPLY FOR A DEPARTMENT OF LABOR AND INDUSTRY PERMIT PRIOR TO CONSTRUCTING ANY UNDERGROUND UTILITIES SHOWN ON THESE PLANS. CONTRACTOR SHALL ADDRESS ALL THE COMMENTS FROM THE DEPARTMENT OF LABOR AND INDUSTRY AS PART OF THE PERMIT APPLICATION PROCESS.

GENERAL EROSION CONTROL NOTES:

1. EROSION CONTROL SHALL CONFORM TO THE MN/DOT EROSION CONTROL HANDBOOK.
2. PRIOR TO ANY CONSTRUCTION ACTIVITIES, THE CONTRACTOR SHALL ACQUIRE THE MPCA NPDES CONSTRUCTION STORMWATER GENERAL PERMIT. A COPY OF THE PERMIT SHALL BE SUBMITTED TO THE CITY PRIOR TO THE PRECONSTRUCTION MEETING.
3. THE CONTRACTOR SHALL INSTALL EROSION AND SEDIMENT CONTROL FACILITIES (BMP'S) PRIOR TO GRADING AND REMOVAL ACTIVITIES. BMP'S SHALL BE MAINTAINED FOR THE DURATION OF CONSTRUCTION ACTIVITIES AND POTENTIAL FOR EROSION HAS PASSED.
4. THE CONTRACTOR SHALL SCHEDULE HIS OPERATION TO MINIMIZE THE AMOUNT OF DISTURBED AREA AT ANY GIVEN TIME.
5. BMP'S SHALL BE INSPECTED DAILY BY THE CONTRACTOR. OBSERVATIONS SHALL BE RECORDED IN AN INSPECTION LOG. WEEKLY INSPECTION LOGS AND INSPECTION LOGS AFTER EVERY 1/2" RAIN EVENT SHALL BE SUBMITTED TO THE CITY INSPECTOR.
6. ALL EROSION AND SEDIMENT CONTROL MEASURES SHALL BE PROPERLY DISPOSED OF WITHIN THIRTY (30) DAYS AFTER FINAL SITE STABILIZATION.
7. THE CONTRACTOR SHALL FILE A NOTICE OF TERMINATION WITH THE MPCA AFTER FINAL STABILIZATION HAS BEEN APPROVED. THE CITY SHALL REVIEW AND APPROVE THE NOTICE OF TERMINATION PRIOR TO SUBMITTAL TO THE MPCA.

REFERENCE NOTES:

① TYPE 1 INLET PROTECTION SHALL BE INSTALLED AS NECESSARY TO MINIMIZE PONDING OF WATER DURING CONSTRUCTION. WIMCO MODEL RD 23 IS SHOWN.
② TYPE 2 INLET PROTECTION SHALL BE INSTALLED ON ALL CASTINGS RECEIVING RUNOFF FROM THE PROJECT AREA. INLET PROTECTION SHALL BE INSTALLED ON EXISTING, OFF SITE CASTINGS PRIOR TO THE START OF CONSTRUCTION. WIMCO MODEL CG 3067 IS SHOWN.
③ TYPE 3 INLET PROTECTION SHALL BE INSTALLED AS NECESSARY TO MINIMIZE PONDING OF WATER DURING CONSTRUCTION. WIMCO MODEL RD 27 IS SHOWN.
④ SEE CITY PLATE NO. STR-26 ON SHEET C3 FOR MODIFIED CLASS 5 AGGREGATE BASE SPECIFICATIONS.
⑤ CONTRACTOR SHALL PROTECT THE INFILTRATION BASIN WITH 48" HIGH ORANGE SAFETY FENCE PRIOR TO THE START OF CONSTRUCTION.
⑥ CONSTRUCTION EQUIPMENT SHALL BE MINIMIZED OVER THE FOOTPRINT OF THE BASIN. ONLY LOW PRESSURE, WIDE TRACKED EQUIPMENT SHALL BE USED FOR CONSTRUCTION.
⑦ INFILTRATION BASINS SHALL NOT BE GRADED TO WITHIN THREE FEET OF THE FINAL GRADES UNTIL THE CONTRIBUTING DRAINAGE AREA HAS BEEN CONSTRUCTED AND FULLY STABILIZED OR RIGOROUS EROSION PREVENTION AND SEDIMENT CONTROLS, SUCH AS DIVERSION BERMS, TO KEEP SEDIMENT AND RUNOFF COMPLETELY AWAY FROM THE INFILTRATION AREAS HAVE BEEN PROVIDED.

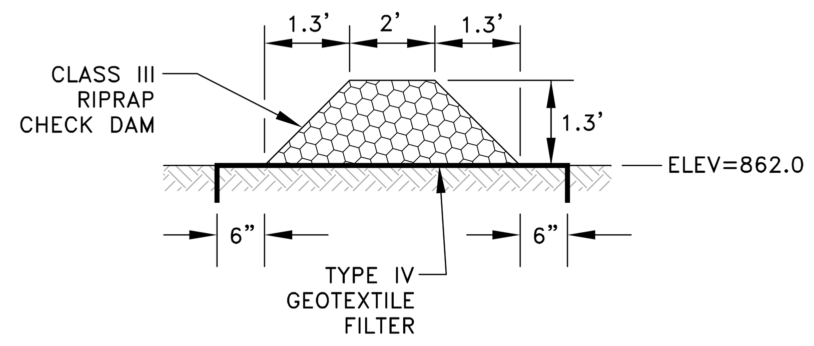

4 / C2 — CHECK DAM DETAIL

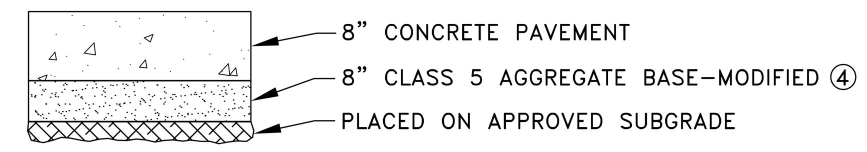

8 / C2 — CONCRETE PAVEMENT SECTION

NO SCALE

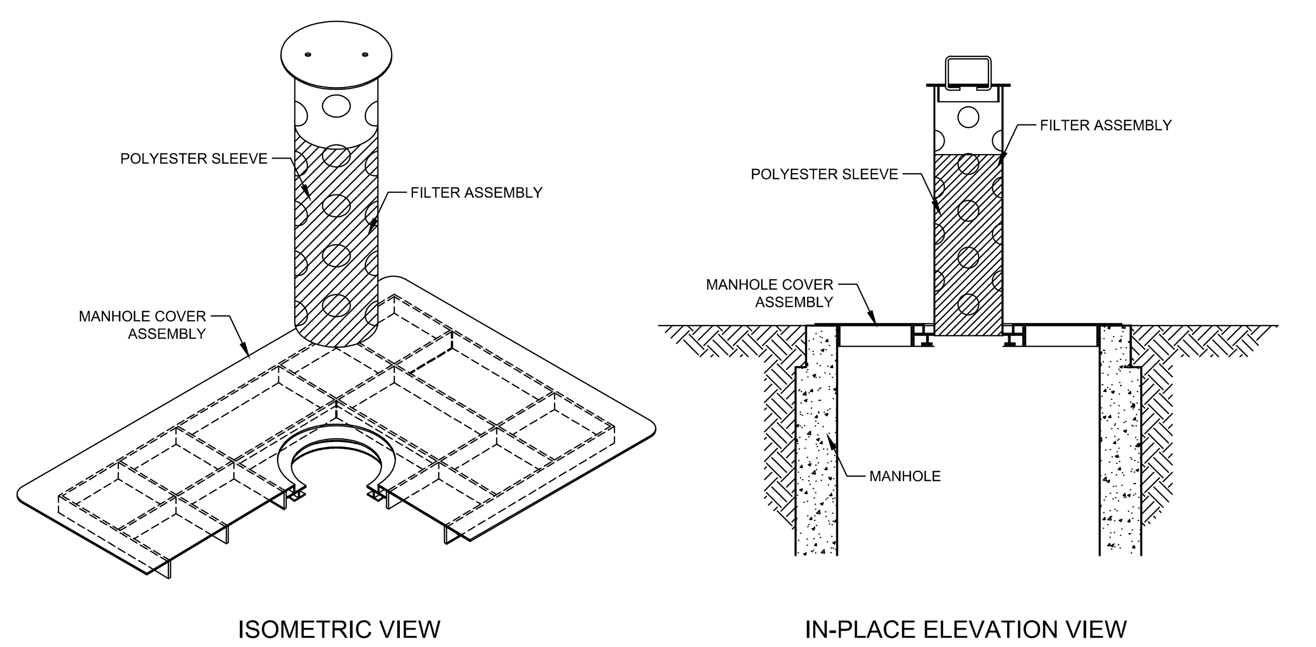

5 / C2 — STORM DRAIN INLET PROTECTION TYPE 1 ①

PRE-CURB

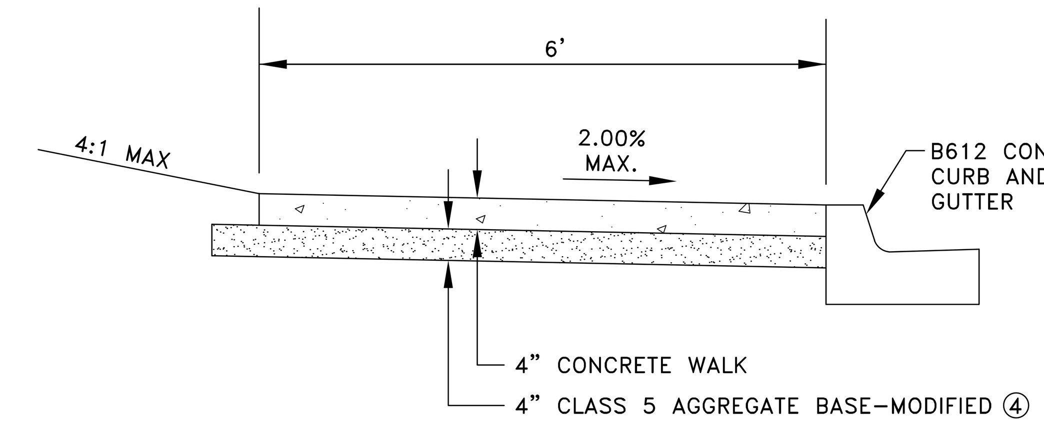

9 / C2 — CONCRETE SIDEWALK

NO SCALE

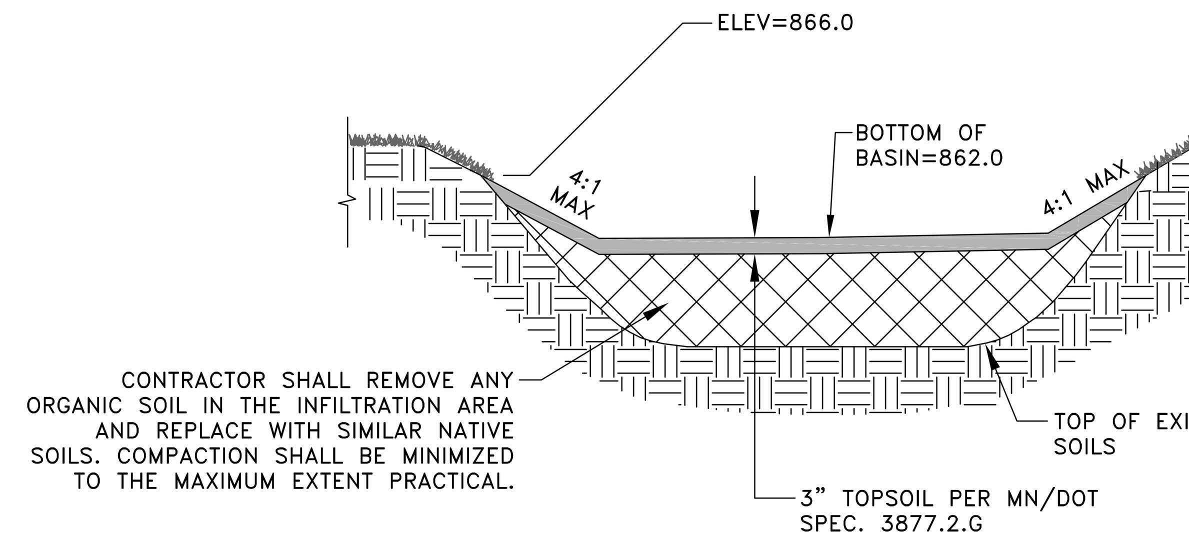

10 / C2 — INFILTRATION BASIN ⑤⑥⑦

NO SCALE

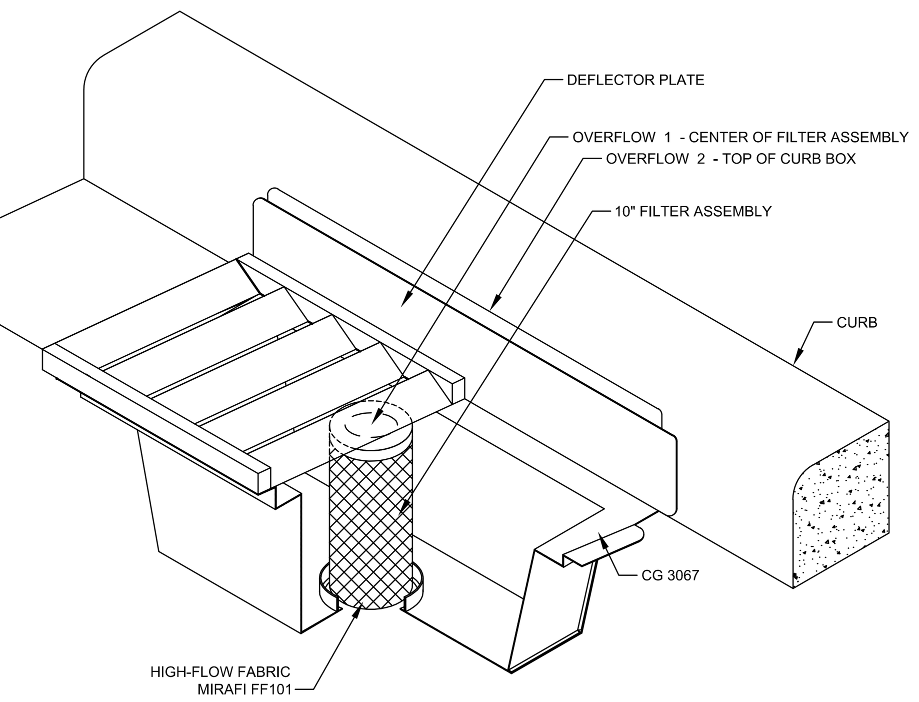

6 / C2 — STORM DRAIN INLET PROTECTION TYPE 2 ②

POST-CURB

SIGNIFICANT TREE INVENTORY TABULATION				
Tree Number	Common Name	Scientific Name	Diameter (inches)	Action
713	American Elm	*Ulmus americana*	8	Protect
714	Siberian Elm *	*Ulmus pumila*	16	Clear & Grub - Pond
715	Siberian Elm *	*Ulmus pumila*	9	Clear & Grub - Parking Lot
716	Siberian Elm *	*Ulmus pumila*	9	Clear & Grub - Building
717	Cottonwood	*Populus deltoides*	16	Clear & Grub - Parking Lot
718	Eastern Red Cedar	*Juniperus virginiana*	4	Clear & Grub - Parking Lot
719	Eastern Red Cedar	*Juniperus virginiana*	5	Clear & Grub - Parking Lot
720	Siberian Elm *	*Ulmus pumila*	11	Clear & Grub - Pond
721	Eastern Red Cedar	*Juniperus virginiana*	5	Clear & Grub - Pond
722	Eastern Red Cedar	*Juniperus virginiana*	5	Clear & Grub - Building
723	Eastern Red Cedar	*Juniperus virginiana*	6	Clear & Grub - Building
725	Siberian Elm *	*Ulmus pumila*	9	Clear & Grub - Building
726	Eastern Red Cedar	*Juniperus virginiana*	4	Clear & Grub - Building
727	Siberian Elm *	*Ulmus pumila*	10	Clear & Grub - Building
728	Siberian Elm *	*Ulmus pumila*	8	Clear & Grub - Parking Lot
729	Siberian Elm *	*Ulmus pumila*	14	Clear & Grub - Parking Lot
730	Siberian Elm *	*Ulmus pumila*	10	Clear & Grub - Building
731	Siberian Elm *	*Ulmus pumila*	10	Clear & Grub - Parking Lot
732	Siberian Elm *	*Ulmus pumila*	9	Clear & Grub - Parking Lot
733	Siberian Elm *	*Ulmus pumila*	13	Clear & Grub - Parking Lot
734	Siberian Elm *	*Ulmus pumila*	18	Clear & Grub - Building
735	Siberian Elm *	*Ulmus pumila*	13	Clear & Grub - Building
736	Eastern Red Cedar	*Juniperus virginiana*	5	Clear & Grub - Building
737	Siberian Elm *	*Ulmus pumila*	10	Clear & Grub - Building
738	Sugar Maple	*Acer saccharum*	8	Protect
739	Siberian Elm *	*Ulmus pumila*	12	Clear & Grub - Building
740	Siberian Elm *	*Ulmus pumila*	11	Clear & Grub - Building
741	Scotch Pine	*Pinus Sylvestris*	10	Clear & Grub - Building
742	Eastern Red Cedar	*Juniperus virginiana*	4	Clear & Grub - Building
743	Scotch Pine	*Pinus Sylvestris*	11	Clear & Grub - Building
744	Siberian Elm *	*Ulmus pumila*	12	Clear & Grub - Building
745	Siberian Elm *	*Ulmus pumila*	17	Clear & Grub - Building
746	Cottonwood	*Populus deltoides*	17	Clear & Grub - Parking Lot
747	Siberian Elm *	*Ulmus pumila*	21	Clear & Grub - Parking Lot
748	Siberian Elm *	*Ulmus pumila*	12	Clear & Grub - Parking Lot
749	Siberian Elm *	*Ulmus pumila*	12	Clear & Grub - Parking Lot
750	Siberian Elm *	*Ulmus pumila*	14	Clear & Grub - Building
751	Siberian Elm *	*Ulmus pumila*	12	Clear & Grub - Building
752	Siberian Elm *	*Ulmus pumila*	16	Clear & Grub - Building
753	Eastern Red Cedar	Juniperus virginiana	6	Clear & Grub - Building
754	Eastern Red Cedar	Juniperus virginiana	4	Clear & Grub - Building
755	Eastern Red Cedar	Juniperus virginiana	6	Clear & Grub - Building
756	Siberian Elm *	Ulmus pumila	16	Clear & Grub - Parking Lot
757	Siberian Elm *	Ulmus pumila	11	Clear & Grub - Parking Lot
758	Siberian Elm *	Ulmus pumila	9	Clear & Grub - Parking Lot
759	Siberian Elm *	Ulmus pumila	12	Clear & Grub - Parking Lot
771	Siberian Elm *	Ulmus pumila	15	Clear & Grub - Parking Lot
772	Siberian Elm *	Ulmus pumila	14	Clear & Grub - Parking Lot
773	Eastern Red Cedar	Juniperus virginiana	7	Clear & Grub - Parking Lot
774	Siberian Elm *	Ulmus pumila	9	Clear & Grub - Parking Lot
776	Siberian Elm *	Ulmus pumila	13	Clear & Grub - Parking Lot
777	Cottonwood	Populus deltoides	10	Clear & Grub - Parking Lot
778	Siberian Elm *	Ulmus pumila	14	Clear & Grub - Parking Lot
779	Siberian Elm *	Ulmus pumila	8	Clear & Grub - Parking Lot
780	Cottonwood	Populus deltoides	10	Clear & Grub - Parking Lot
781	Siberian Elm *	Ulmus pumila	9	Clear & Grub - Parking Lot

* Invasive Species

SIGNIFICANT TREE SUMMARY

TOTAL SIGNIFICANT TREE DBH ON SITE:	589 INCHES
EXCLUDE (FOR POND, INVASIVES, ETC.):	470 INCHES
REQUIRED TO BE SAVED (30% X 119):	36 INCHES
PROPOSED TO BE SAVED:	16 INCHES

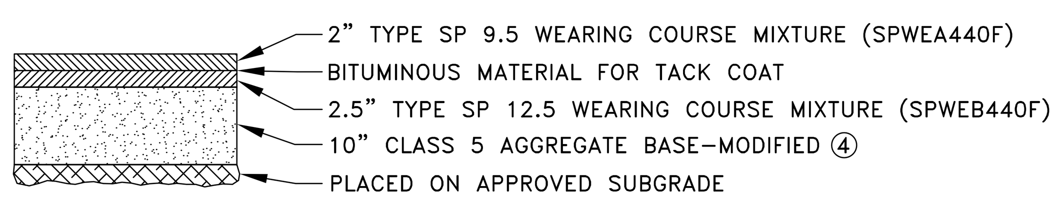

1 / C2 — HEAVY DUTY BITUMINOUS PAVEMENT SECTION

NO SCALE

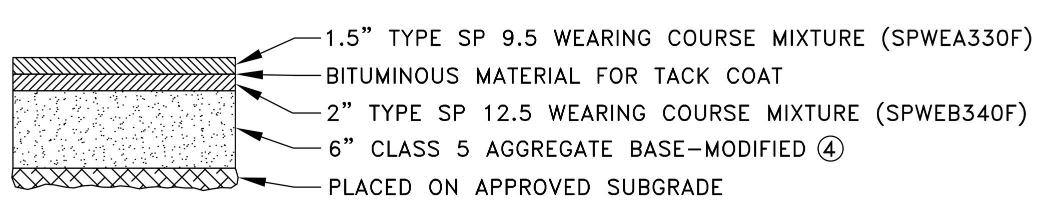

2 / C2 — LIGHT DUTY BITUMINOUS PAVEMENT SECTION

NO SCALE

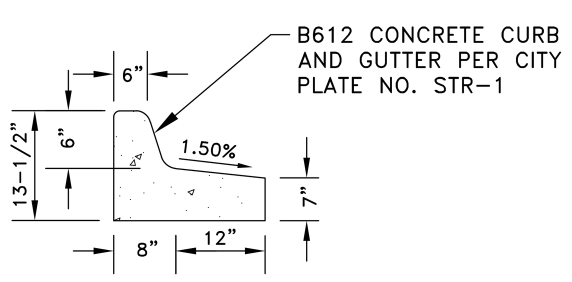

3 / C2 — TIPOUT CURB DETAIL

NO SCALE

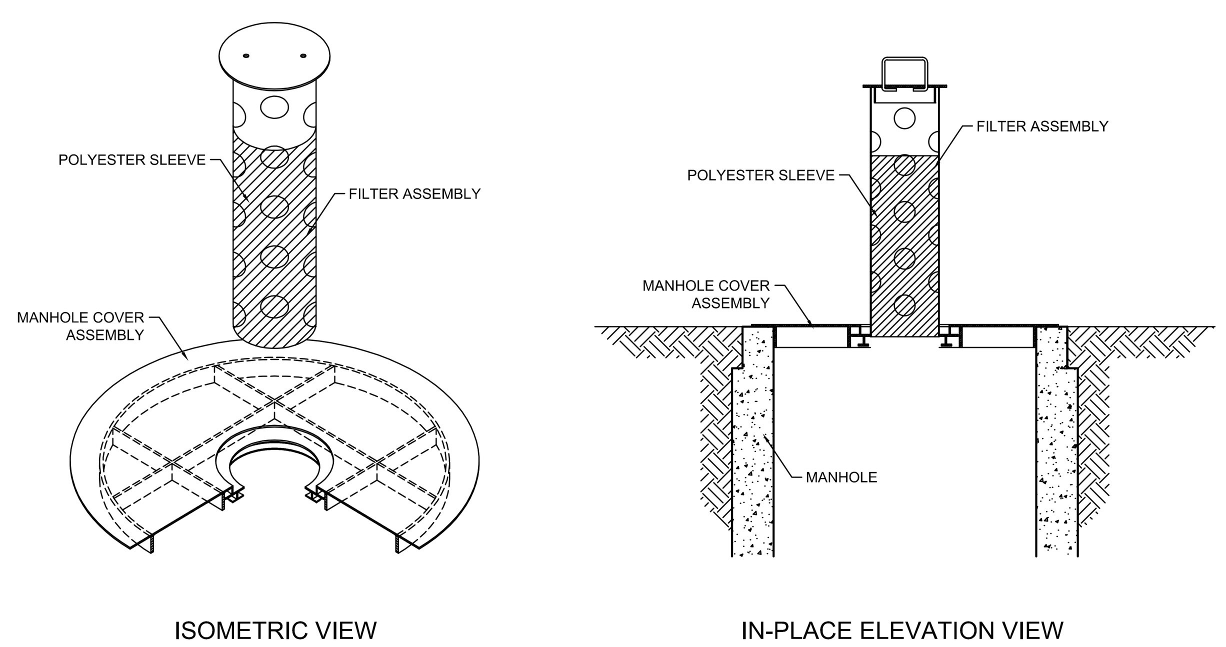

7 / C2 — STORM DRAIN INLET PROTECTION TYPE 3 ③

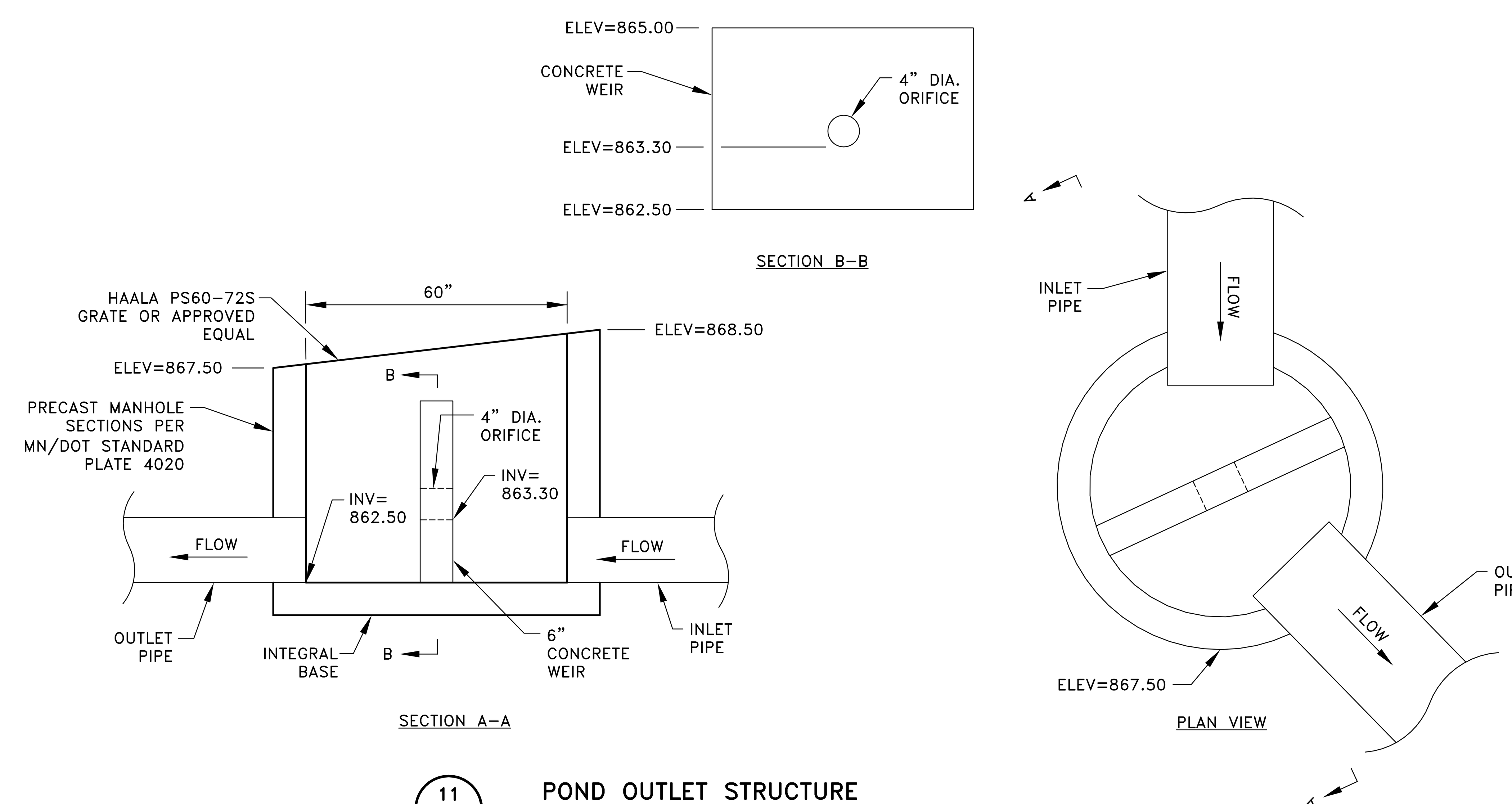

11 / C2 — POND OUTLET STRUCTURE

NO SCALE

DATE	REVISION	DATE	REVISION

I hereby certify that this plan, specification, or report was prepared by me or under my direct supervision and that I am a duly Licensed Professional Engineer under the laws of the State of Minnesota.

TIMOTHY A. EGGERICHS, P.E.

Date 6/18/21 Lic. No. 43362

DESIGNED BY: TAE
DRAWN BY: TAE
CHECKED BY: CJJ

Hakanson Anderson
Civil Engineers and Land Surveyors
3601 Thurston Ave., Anoka, Minnesota 55303
763-427-5860 FAX 763-427-0520
www.hakanson-anderson.com

LOT 1, BLOCK 1
KNOLL PROPERTIES SECOND ADDITION

CONSTRUCTION NOTES AND DETAILS

CITY OF RAMSEY, MINNESOTA

SHEET C2 OF C10 SHEETS

3395.12

Jun 18, 2021 - 8:47am
K:\PRIVATE\3395.12\ENGINEERING\339512_DETAIL.dwg